IF-UFRJ-92-23

INSTITUTO DE FÍSICA

Fermilab Library
0 1160 0019642 2

IF/UFRJ/92/23

SEMINÁRIO DE MECÂNICA E GEOMETRIA - III

CLASSICAL BRST COHOMOLOGY

F.J. Vanhecke

Sept/92

UNIVERSIDADE FEDERAL DO RIO DE JANEIRO
INSTITUTO DE FÍSICA
Cx. P 68.528
21.944 - RIO DE JANEIRO
BRASIL

LIBRARY
OCT 11 1992

Instituto de Física
Departamento de Física Teórica
Universidade Federal do Rio de Janeiro

SEMINÁRIO DE MECÂNICA E GEOMETRIA - III

CLASSICAL BRST COHOMOLOGY

F.J.VANHECKE

1992 - 2

ABSTRACT

We review the classical BRST cohomology of constrained hamiltonian systems when the constraint set is a co-isotropic submanifold of a finite dimensional symplectic manifold (M,ω). We restrict our analysis to the case when the constraints arise from a Poisson action of a Lie group G on M. In gauge theories the constraint set is the inverse image of the origin in $\mathcal{L}ie(G)^*$ under the momentum map : $C = \mathcal{J}^{-1}(0)$. We extend the BRST formalism to the case of a hamiltonian system with symmetry when $C = \mathcal{J}^{-1}(\mathcal{O})$, where $\mathcal{O}$ is a generic co-adjoint orbit in $\mathcal{L}ie(G)^*$.

Sur la place, chacun passe
chacun vient, chacun va ;
drôles de gens que ces gens-là ! [Bi 75]

Introduction

In this seminar we discuss some of the classical aspects of the so-called BRST approach to constrained Hamiltonian systems. We restrict[1] our attention to the case in which the constraint set C is a co-isotropic submanifold of a m-dimensional symplectic manifold (M,ω) arising from the Poisson action of a N-dimensional Lie group G on M.

In section **1.**, we review the construction due to Kazhdan, Kostant and Sternberg in [KKS 78], of the reduced symplectic manifold $(\mathcal{R},\omega_{\mathcal{R}})$, when C is the inverse image under the momentum map J of a co-adjoint orbit $\mathcal{O}$ in $\mathcal{G}^*$, the dual of the Lie algebra $\mathcal{G}$ of G.

The physics on the reduced phase space is discussed in section **2.**.
When the hamiltonian is G-invariant, the reduction arises from the existence of N constants of motion which are the components of the momentum map.
When there is a gauge invariance of the system, points belonging to the same G-orbit are physically indistinguishable and the functions on the reduced phase space are the physical observables. In this case $\mathcal{R}$ is obtained as $\mathcal{J}^{-1}(0)/G$, where 0 is the origin in $\mathcal{G}^*$.

These physical observables for gauge theories are described in section **4.** in the language of (co)homological algebra, following the work of Kostant and Sternberg [KS 87].
Cohomological aspects in constrained dynamics were noticed originally by Henneaux [H 85], Mc Mullan [McM 87], Dubois-Violette [D-V 87], Henneaux and Teitelboim [HT 88] and Stasheff [S 88].

In section **4.**, following again [KS 87], the cohomology algebra of this description is interpreted as the quotient of a subalgebra of a super-Poisson algebra by an ideal in this subalgebra.

This super-Poisson algebra in turn is associated to a symplectic super-manifold, the extended phase space, in section **5.**, following Loll [Lo 88] and Tuynman [T 89].

In section **6.** we propose a similar cohomology description of the functions on the reduced phase space in the case of a hamiltonian system with symmetry.

[1] This in spite of the claim ([HT 88]) that the group structure should <u>not</u> be emphasized to get a "full" understanding of the BRST symmetry

In order not to extend too much the length of these notes we have not discussed the approach to the BRST symmetry via the "vertical cohomology" provided by the exterior differentiation in the original phase space (M,ω) along the gauge orbits.
Also not discussed is the case when the constraint set C does not arise from a group action. The program then is more ambitious and the construction (therefore) is less transparent.
Further information about these topics can be found in [D-V 87], [HT 88], [S 88], [FHST 89], [FK 90], [FO'F 90] and [FO'F-K 91].

References which are essentially oriented to the quantisation problem, but which contain a useful summary and complementary information about the classical set-up are :
[T 89], [DET 90] , [DEGST 91] and [FO'F-K 91].
The Geometric approach to Mechanics can be found in various textbooks :
[Ar 76], [AbM 81], [GS 84] and [LM 86].

1. The KKS reduction

Let M be a m-dimensional symplectic manifold with its closed and nondegenerate two-form ω. The so-called musical maps $\omega^\flat : TM \to T^*M : \mathbf{v} \to \omega^\flat(\mathbf{v}) = \imath(\mathbf{v})\omega$, and its inverse $\omega^\natural = (\omega^\flat)^{-1}$, define the Hamiltonian vector fields as the image of the map $\mathcal{H}am$ from $\mathcal{F}(M)$, the space of C^∞ functions to $\mathcal{V}ect(M)$, the space of vector fields :

$$\mathcal{H}am : \mathcal{F}(M) \to \mathcal{V}ect(M) : f \to \mathcal{H}(f) = \omega^\natural \circ (\mathbf{d}f) \quad \text{or} \quad \imath(\mathcal{H}(f))\omega = \mathbf{d}f \ .$$

The Poisson bracket on M is defined by :

$$\{f,g\} = \omega(\mathcal{H}(f),\mathcal{H}(g)) = -\imath(\mathcal{H}(f))\,\imath(\mathcal{H}(g))\omega = -\imath(\mathcal{H}(f))\mathbf{d}g \ ,$$

and $\mathcal{H}am$ becomes a Lie algebra homomorphism from $\mathcal{F}(M)$, with $\{,\}$ as bracket, to $\mathcal{V}ect(M)$ with *minus* the ordinary Lie bracket of vector fields :

$$\mathcal{H}(\{f,g\}) = -[\mathcal{H}(f),\mathcal{H}(g)].$$

The kernel of this homomorphism is given by the constant functions on M which are the real numbers R, considered as a commutative Lie subalgebra of $\mathcal{F}(M)$.

There is thus an exact sequence of Lie algebra homomorphisms :

$$0 \longrightarrow R \longrightarrow \mathcal{F}(M) \longrightarrow \mathcal{H}am(\mathcal{F}(M)) \longrightarrow 0 \ .$$

Let Φ be a symplectic action of a connected N-dimensional Lie group G on (M,ω). This means a group homomorphism from G to $\mathcal{D}iff(M)$, the diffeomorphisms of M :

$$\Phi : G \to \mathcal{D}iff(M) : g \to \Phi_g \quad \text{, such that} \quad \Phi_g^*\omega = \omega \ .$$

The generators of the group action are defined by the differential of Φ at the neutral $\{\nu\}$ of G, which is a Lie algebra homomorphism from the Lie algebra $\mathcal{G}$ of the Lie group G to the Lie algebra of $\mathcal{D}iff(M)$, i.e. $\mathcal{V}ect(M)$.

$$\mathbf{X} = \Phi_{*|\nu} : T_\nu(G) \simeq \mathcal{G} \to \mathcal{V}ect(M) : \vec{u} \to \mathbf{X}(\vec{u}) \ ,$$

$$\text{with} \quad \mathbf{X}([\vec{u},\vec{v}]) = -[\mathbf{X}(\vec{u}),\mathbf{X}(\vec{v})]$$

These vector fields are locally Hamiltonian :

$$\mathcal{L}(\mathbf{X}(\vec{u}))\omega = \mathbf{d}(\imath(\mathbf{X}(\vec{u}))\omega) = 0 \ .$$

If the generators are Hamiltonian, the action is called (almost) Hamiltonian and there exists a linear map :

$$\Psi : \mathcal{G} \to \mathcal{F}(M) : \vec{u} \to \Psi(\vec{u}) \quad \text{such that} \quad \mathbf{X}(\vec{u}) = \mathcal{H}am(\Psi(\vec{u})).$$

Furthermore : $\mathcal{H}(\{\Psi(\vec{u}),\Psi(\vec{v})\}) = -[\mathcal{H}(\Psi(\vec{u})),\mathcal{H}(\Psi(\vec{v}))] = \mathcal{H}(\Psi([\vec{u},\vec{v}]))$.

The action is said to be a Poisson action (in Arnold's [Ar 76] terminology), if this linear map Ψ can be choosen as a Lie algebra homomorphism i.e. such that :

$$\Psi([\vec{u},\vec{v}]) = \{\Psi(\vec{u}),\Psi(\vec{v})\} \ .$$

The following commutative diagram of Lie algebra homomorphisms is then obtained :

$$\begin{array}{ccccccccc} 0 & \longrightarrow & R & \longrightarrow & \mathcal{F}(M) & \longrightarrow & \mathcal{H}am(\mathcal{F}(M)) & \longrightarrow & 0 \\ & & & & \Psi \nwarrow & & \uparrow \mathbf{X} & & \\ & & & & & & \mathcal{G} & & \end{array}$$

An equivalent definition is that an action is Poisson when there is an <u>equivariant</u> momentum map J from the symplectic manifold M to the dual $\mathcal{G}^*$ of the Lie algebra $\mathcal{G}$:

$$J : M \to \mathcal{G}^* : x \to J(x), \text{ such that } \Psi(\vec{u},x) = \langle J(x) \mid \vec{u}\rangle \ ,$$

where $\langle\ |\ \rangle$ is the canonical pairing between $\mathcal{G}$ and $\mathcal{G}^*$.

The equivariance is relative to the Φ-action of G on M and its coadjoint action $\mathbf{K}$ on $\mathcal{G}^*$:

$$\mathbf{K}(g)\ J(x) = J(\Phi(g,x)).$$

The orbit of the point $x \in M$ is defined by : $\Phi(G,x) = \{\ \Phi(g,x) |\ g \in G\}$, and its isotropy group is the subgroup : $G_x = \{g \in G \mid \Phi(g,x) = x\}$.

The action is called <u>free</u> if the isotropy group of each point is trivial : $G_x = \{\nu\}$.

It is called a <u>proper</u> action if $\Phi^\ell : G \times M \longrightarrow M \times M : (g,x) \longrightarrow (\Phi(g,x),x)$, is a proper mapping, i.e. the inverse images of compact sets are compact.

When the action is proper, the orbits are closed submanifolds immersed in M.

If the action is assumed to be free, the set of orbits M/G has a manifold structure such that the canonical projection : $\pi : M \longrightarrow M/G$ is a submersion.

Let $\mathcal{O} = \{\mathbf{K}(g)\xi \mid g \in G\}$ be a coadjoint orbit of G in $\mathcal{G}^*$.

It is said to have a <u>clean</u> intersection[2] with the momentum map, when :

a) $J^{-1}(\mathcal{O})$ is a submanifold of M ,

b) $T_x(J^{-1}(\mathcal{O})) = J^{-1}_{*|x}(T_{J(x)}(\mathcal{O}))$, $\forall\, x \in J^{-1}(\mathcal{O})$.

[2] This notion of clean intersection generalizes that of transversality.

When this clean intersection hypothesis is fulfilled, Kazhdan, Kostant and Sternberg, in [KKS 78], showed that :

1) $C = J^{-1}(\mathcal{O})$ is a co-isotropic submanifold of M with canonical injection $j_C : C \to M$.

2) The distribution defined by the kernel of $\omega_C = j_C^*\omega$ is integrable and the leaf of its foliation, containing the point $x \in C$, is the orbit under the action of the connected component of the isotropy group $G_\xi = \{g \in G \mid \mathbf{K}(g)\xi = \xi\}$ of the point $G_\xi = J(x)$.

3) Moreover, if the foliation is fibrating, the space of leaves $\mathcal{R} = C/Ker(\omega_C)$ is a manifold such that the projection $\pi : C \to \mathcal{R}$ is a submersion and it has a unique symplectic structure given by the two-form $\omega_\mathcal{R}$ defined by : $\pi^*\omega_\mathcal{R} = \omega_C$.

This theorem is essentially a rephrasing of the Marsden-Weinstein, [MW 74], reduction procedure, the reduced phase-space $\mathcal{R}$ being diffeomorphic to the product of the co-adjoint orbit $\mathcal{O}$ with the Marsden-Weinstein reduced symplectic manifold $J^{-1}(\xi)/G_\xi$, where ξ is any point of the co-adjoint orbit $\mathcal{O}$.

The proof goes as follows :

The differential of the momentum map $J : M \to \mathcal{G}^* : x \to \xi = J(x)$, at x reads :

$$J_{*|x} : T_xM \to T_\xi\mathcal{G}^* \cong \mathcal{G}^* \ : \ \mathbf{V}_x \to J_{*|x}(\mathbf{V}_x).$$

Evaluated at any $\vec{u} \in \mathcal{G}$, it yields :

$$\langle\, J_{*|x}(\mathbf{V}_x) \mid \vec{u}\,\rangle = \imath(\mathbf{V}_x)\mathbf{d}(\,J(x) \mid \vec{u}\,\rangle = \imath(\mathbf{V}_x)\,\mathbf{d}\Psi(\vec{u},x) = \omega_x\,(\mathbf{X}(\vec{u},x)\,,\ \mathbf{V}_x\,)\,.$$

Since $O_x = T_x\Phi(G,x)$, the tangent space to the orbit at the point x, is spanned by the generators $\{\mathbf{X}(\vec{u},x)\,,\ \vec{u} \in \mathcal{G}\}$, and one has $Ker\ J_{*|x} = O_x^\perp$, the symplectic polar of O_x .

A tangent vector $\mathbf{V}_x$ of T_xM at a point $x \in C$ is tangent to C if and only if there is a vector $\eta_\xi \in T_\xi\mathcal{O}$ such that $J_{*|x}(\mathbf{V}_x) = \eta_\xi$, but since the tangent space $T_\xi\mathcal{O}$ is generated by the vectors $\mathbf{k}(\vec{u})\,\xi = \frac{d}{dt}\,\mathbf{K}(\,exp(t\vec{u})\,)\,\xi\,_{|t=0}$, $\vec{u} \in \mathcal{G}$, it follows that :

$$\mathbf{V}_x \in T_xC \Longleftrightarrow \exists\,\vec{v} \in \mathcal{G} \vdash J_{*|x}(\mathbf{V}_x) = \mathbf{k}(\vec{v})\xi$$

$$\Longleftrightarrow \exists\,\vec{v} \in \mathcal{G} \vdash \forall\,\vec{u} \in \mathcal{G}\,,\ \omega_x(\mathbf{X}(\vec{u},x),\mathbf{V}_x) = \langle\,\mathbf{k}(\vec{v})\xi \mid \vec{u}\,\rangle = \langle\,\xi \mid [\,\vec{u},\vec{v}\,]\,\rangle\,.$$

The generators $\mathbf{X}(\vec{v})$ satisfy :

$$\omega(\mathbf{X}(\vec{u}),\mathbf{X}(\vec{v})) = \{\,\Psi(\vec{u}),\Psi(\vec{v})\} = \Psi([\vec{u},\vec{v}]) = \langle J(\,) \mid [\vec{u},\vec{v}]\,\rangle\,,$$

so that $\mathbf{V}_x - \mathbf{X}(\vec{v},x)$ belongs to $O_x^\perp$, which is the kernel of $J_{*|x}$.

The tangent space to C at x is thus obtained as : $T_xC = O_x + O_x^\perp$, hence $T_xC^\perp = O_x^\perp \cap O_x$ and C is obviously co-isotropic : $T_xC^\perp \subseteq T_xC$.

So $Ker(\omega_C)_x = T_xC \cap T_xC^\perp = T_xC^\perp$, and $T_xC/T_xC^\perp$ is a symplectic vector space.

Now, $T_xC^\perp$ is generated by those vectors $\mathbf{X}(\vec{v},x)$ of O_x such that :

$$\forall\,\vec{u} \in \mathcal{G} : 0 = \omega_x(\mathbf{X}(\vec{u},x),\mathbf{X}(\vec{v},x)) = \langle J(x) \mid [\,\vec{u},\,\vec{v}]\rangle = \langle \mathbf{k}(\vec{v})J(x) \mid \vec{u}\rangle,$$

and $\mathbf{k}(\vec{v})J(x) = 0$ meaning that $\vec{v} \in \mathcal{G}_{J(x)}$, the Lie algebra of the isotropy group of $J(x)$.

Since $[\mathbf{X}(\vec{v}_1,x),\mathbf{X}(\vec{v}_2,x)] = -\mathbf{X}([\vec{v}_1,\vec{v}_2],x)$ and $\vec{v}_1\,,\,\vec{v}_2 \in \mathcal{G}_{J(x)} \Longrightarrow [\vec{v}_1,\vec{v}_2] \in \mathcal{G}_{J(x)}$,

the distribution defined by $T_xC^\perp$ is integrable and the leaf $[x]$ through a point x of C is its orbit under the action of the (connected component) of the isotropy group of $J(x)$.

Points of C belonging to the same leaf, define an equivalence class in C.

When the set of equivalence classes, i.e. the quotient : $\mathcal{R} = C/Ker(\omega_C)$ is a manifold, the projection : $\pi : C \to \mathcal{R}$, is a submersion.

The tangent space to $\mathcal{R}$ at a leaf $[x]$ is : $T_{[x]}\mathcal{R} \simeq T_xC/T_xC^\perp$, where $[x] = \pi(x)$.

This isomorphism endowes $\mathcal{R}$ with a symplectic two-form $\omega_\mathcal{R}$, such that : $\pi^*\omega_\mathcal{R} = j_C^*\omega$.

The momentum map also factorises (on C) as : $J \circ j_C = J_\mathcal{R} \circ \pi$,

where $J_\mathcal{R} : \mathcal{R} \to \mathcal{G}^*$, is equivariant under the induced action of G on $\mathcal{R}$.

It can be shown that there is an open dense set of M whose points each have a neighbourhood U where the dimension of the orbit is constant. This implies that $J^{-1}(\mathcal{O}) \cap U$ is a submanifold of M, where $\mathcal{O}$ is the coadjoint orbit in $\mathcal{G}^*$ containing $\xi = J(x)$.

The dimensions of the various subspaces are given by :

$$dim(\mathcal{G}_\xi) = f \quad , \quad dim(\mathcal{O}) = N - f \text{ (even)},$$

$$dim(G_x) = i \quad , \quad dim(\Phi(G,x) = dim(O_x) = N - i\,,$$

$$dim(J^{-1}(\xi)) = dim(O_x^\perp) = m - (N - i)\,,$$

$$dim(J^{-1}(\mathcal{O})) = dim(T_xC) = m - (f - i)\,,$$

$$dim(T_xC^\perp) = f - i\,,$$

$$dim(\mathcal{R}) = m - 2(f - i) \quad \text{and}$$

$$dim(J^{-1}(\xi)/\mathcal{G}_\xi) = m - (N - f) - 2(f - i) \text{ (even)}.$$

The picture below illustrates the procedure :

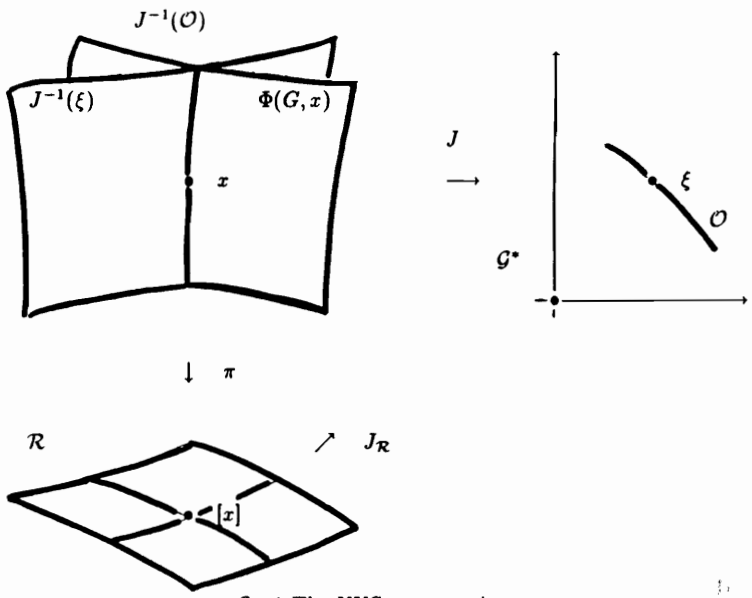

fig.1 The KKS construction

2. Physics on the reduced manifold

In the usual geometric formulation of Mechanics, the states of a dynamical system are points of a symplectic [3] manifold, (M,ω), the phase space of the system.

The C^∞ functions on this manifold, $\mathcal{F}(M)$, besides their rôle as physical observables, are also the generators of infinitesimal transformations defined by the corresponding Hamiltonian vector fields.

One distinguished function, h, called <u>the</u> Hamiltonian, defines the time coordinate by the flow of its Hamiltonian vector field.

In general, any vector field V defines a one parameter (local) group of diffeomorphisms :

$$\eta_t \,:\, M \to M \,:\, x \to x_t = \eta_t(x)\,,$$

through the solution of the following Cauchy problem :

Find the curve $\gamma(x) \,:\, I \subseteq R \,:\, t \to \gamma(x,t)$ such that :

$\gamma(x,0) = x$ and $\frac{d}{dt}\gamma(x,t) = V(\gamma(x,t))$.

When such a solution can be defined for all $t \in R$, the vector field is said to be complete and defines a flow . The Hamiltonian vector field $\mathcal{H}(h)$, is supposed to be complete so that there is a <u>dynamical</u> flow : $\eta_t \,:\, M \to M \,:\, x \to \eta_t(x) = \gamma(x,t)$, with

$$\frac{d}{dt}\eta_t(x) = \mathcal{H}(h)(\eta_t(x))\,.$$

This flow is symplectic $\eta_t^*\omega = \omega$ and conserves h and $\mathcal{H}(h)$:

$$\eta_t^* h = h\,,\ \eta_t^*\mathcal{H}(h) = \mathcal{H}(h)\,.$$

The time evolution of an observable f is defined by : $f_t = \eta_t^* f$, and obeys :

$$\frac{d}{dt} f_t = \{f_t\,,\,h\} = \eta_t^*\{f\,,\,h\}\,.$$

[3] For simplicity we restrict to autonomous systems. For the more general case of contact structures or Poisson manifolds, we refer to [Al 91] and [MR 86].

Let us consider first the reduction arising from a Poisson action Φ of a group G on M that conserves the Hamiltonian : $\Phi_g^* h = h$. The Hamiltonian vector field $\mathcal{H}(h)$ is then also conserved under the pull-back of Φ : $\Phi_g^* \mathcal{H}(h) = \mathcal{H}(h)$, and its flow commutes with the action of G : $\eta_t \circ \Phi_g = \Phi_g \circ \eta_t$.

The functions $\Psi(\vec{u})$, are constants of motion : $\eta_t^* \Psi(\vec{u}) = \Psi(\vec{u})$, which yields

$$\frac{d}{dt}(\eta_t^* \Psi(\vec{u})) = \eta_t^* \{\Psi(\vec{u}), h\} = 0 .$$

A regular value of J is a point ξ of $\mathcal{G}^*$ such that, $\forall x \in J^{-1}(\xi)$, the differential $J_{*|x}$, is surjective. Thus $J^{-1}(\xi)$ is a submanifold of M. It is invariant under the flow η_t.

In particular, if this fixed value is zero, the point $0 \in \mathcal{G}^*$, in itself, forms the trivial co-adjoint orbit which the KKS reduction procedure can be applied to.

When ξ is not zero, it generates a coadjoint orbit $\mathcal{O}$ in $\mathcal{G}^*$, with its canonical symplectic two-form $\omega_{\mathcal{O}}$, invariant under the coadjoint action of G and defined by :

$$\omega_{\mathcal{O}}(\mathbf{k}(\vec{u})\xi, \mathbf{k}(\vec{v})\xi) = -\langle \xi \mid [\vec{u}, \vec{v}] \rangle .$$

The Hamiltonian vector field of a function f on $\mathcal{O}$ is given by : $(\mathcal{H}_{\mathcal{O}}(f))(\xi) = -\mathbf{k}(\mathbf{d}f_\xi)\xi$, where the one-form on $\mathcal{G}^*$, $\mathbf{d}f_\xi$, is identified with an element of $\mathcal{G}$.

The Poisson brackets are obtained as : $\{f, g\}_{\mathcal{O}}(\xi) = -\langle \xi \mid [\mathbf{d}f_\xi, \mathbf{d}g_\xi] \rangle$.

The coadjoint action of G on $\mathcal{O}$ is actually a Poisson action with momentum mapping :

$$J_{\mathcal{O}} : \mathcal{O} \to \mathcal{G}^* : \xi \to J_{\mathcal{O}}(\xi) = -\xi .$$

Let us, following Guillemin and Sternberg [GS 84], consider the product manifold $\tilde{M} = M \times \mathcal{O}$, with its symplectic two-form $\tilde{\omega} = \omega \oplus \omega_{\mathcal{O}}$. The group action on $\tilde{M}$: $\tilde{\Phi}(g, (x, \xi)) = (\Phi(g, x), \mathbf{K}(g)\xi)$, is Poisson with momentum mapping :

$$\tilde{J} : \tilde{M} \to \mathcal{G}^* : \tilde{x} = (x, \xi) \to \tilde{J}(\tilde{x}) = J(x) + J_{\mathcal{O}} = J(x) - \xi .$$

In this setting the KKS construction is applied to the trivial coadjoint orbit in $\mathcal{G}^*$.

The inverse image of $0 \in \mathcal{G}^*$ under $\tilde{J}$ is the constraint set :

$$\tilde{C} = \tilde{J}^{-1}(0) = \{(x, \xi) \in \tilde{M} \mid J(x) - \xi = 0\} = \bigcup_{\xi \in \mathcal{O}} \{J^{-1}(\xi) \times \xi\} ,$$

obviously diffeomorphic to $C = J^{-1}(\mathcal{O})$.

The canonical injection $j_{\tilde{C}} : \tilde{C} \to \tilde{M}$, defines the presymplectic two-form : $\tilde{\omega}_{\tilde{C}} = j_{\tilde{C}}^* \tilde{\omega}$.

Its kernel defines a foliation whose leaves are the orbits, $\tilde{\Phi}(G, \tilde{x})$, of the points $\tilde{x} \in \tilde{C}$.

Let $\tilde{O}_{\tilde{x}}$ denote the tangent space at $\tilde{x}$ to the orbit, then $\tilde{O}_{\tilde{x}} \subseteq \tilde{O}_{\tilde{x}}^{\perp}$, and the orbits are isotropic submanifolds in $\tilde{M}$. It follows that $(T_{\tilde{x}}\tilde{C}^{\perp} = \tilde{O}_{\tilde{x}}) \subseteq (T_{\tilde{x}}\tilde{C} = \tilde{O}_{\tilde{x}}^{\perp})$, and $\tilde{C}$ is co-isotropic in $\tilde{M}$, just as C is in M. The set of G-orbits in $\tilde{C}$ forms the reduced quotient space, $\tilde{\mathcal{R}} = \tilde{C}/Ker(\tilde{\omega}_{\tilde{C}})$. When it is a manifold, image of the submersion $\tilde{\pi} : \tilde{C} \to \tilde{\mathcal{R}}$, it is symplectic with symplectic two-form $\tilde{\omega}_{\tilde{\mathcal{R}}}$ defined by : $\tilde{\pi}^* \tilde{\omega}_{\tilde{\mathcal{R}}} = j_{\tilde{C}}^* \tilde{\omega}$.

This is the KKS version of the Marsden-Weinstein symplectic reduction.

Points of $\tilde{\mathcal{R}}$ are written as $[\tilde{x}] = \tilde{\pi}(\tilde{x})$, $\tilde{x} \in \tilde{C}$ and the tangent space $T_{[\tilde{x}]}\tilde{\mathcal{R}}$ is described as the quotient of $T_{[\tilde{x}]}\tilde{C}$ by $\tilde{O}_{\tilde{x}}$, where $\tilde{x} = (x, \xi)$ is any point of the orbit $[\tilde{x}]$.

Now, a vector $V_x \oplus \mathbf{k}(\vec{v})\xi$ of $T_{\tilde{x}}\tilde{M}$ is tangent to $\tilde{C}$ if and only if $\mathbf{k}(\vec{v})\xi = J_{*|x}(V_x)$, i.e. when V_x is tangent to C and $\vec{v} \in \mathcal{G}$ verifies the above equality.

A vector $V_{[\tilde{x}]}$ of $T_{[\tilde{x}]}\tilde{\mathcal{R}}$ is represented at $\tilde{x}$ by an equivalence class $(V_x \oplus \mathbf{k}(\vec{v})\xi) + \tilde{O}_{\tilde{x}}$.

At another point $\tilde{x}' = \tilde{\Phi}(g, \tilde{x}) = (x', \xi') \in [\tilde{x}]$, the same vector $V_{[\tilde{x}]}$ will be represented by $(V'_{x'} \oplus \mathbf{k}(\vec{v}')\xi') + \tilde{O}_{\tilde{x}'}$, where $V'_{x'} = \Phi_{g*|x} V_x$ and $\vec{v}' = \mathbf{Ad}(g)\vec{v}$.

The symplectic two-form $\tilde{\omega}_{\tilde{\mathcal{R}}}$ is given by

$$\tilde{\omega}_{\tilde{\mathcal{R}}}(V_{[\tilde{x}]}, W_{[\tilde{x}]}) = \tilde{\omega}_{\tilde{C}}(V_x \oplus \mathbf{k}(\vec{v})\xi, W_x \oplus \mathbf{k}(\vec{w})\xi) = \omega(V_x, W_x) - \langle J(x) \mid [\vec{v}, \vec{w}] \rangle .$$

Its value at $[\tilde{x}]$ is independent of the choosen point $\tilde{x}$ of the orbit $[\tilde{x}]$ and of the choosen representatives in $T_{\tilde{x}}\tilde{C} / \tilde{O}_{\tilde{x}}$.

The Hamiltonian h on M, invariant under the group action, defines an extended Hamiltonian on $\tilde{M}$ by $\tilde{h}(x, \xi) = h(x)$, invariant under the group action $\tilde{\Phi}$.

Its Hamiltonian vector field, $\tilde{\mathcal{H}}(\tilde{h})(x, \xi) = \mathcal{H}(h)(x) \oplus 0$, at the point $\tilde{x} = (x, \xi) \in \tilde{C}$, lies in $T_x(J^{-1}(\xi)) \oplus 0 \subset T_{\tilde{x}}\tilde{C}$. It generates a flow $\tilde{\eta}_t(x, \xi) = (\eta_t(x), \xi)$, commuting with the group action on $\tilde{M}$: $\tilde{\Phi}_g \circ \tilde{\eta}_t = \tilde{\eta}_t \circ \tilde{\Phi}_g$. This flow conserves not only $\tilde{J}^{-1}(0)$: $\tilde{\eta}_t \circ j_{\tilde{C}} = j_{\tilde{C}} \circ \tilde{\eta}_t$, but also separetely each submanifold $J^{-1}(\xi) \times \xi$ (ξ fixed).

So it induces a flow $\tilde{\rho}_t$ on $\tilde{R}$, such that $\tilde{\rho}_t \circ \tilde{\pi} = \tilde{\pi} \circ \tilde{\eta}_t$. This implies

$$\tilde{\pi}^* \tilde{\rho}_t^* \tilde{\omega}_{\tilde{R}} = \tilde{\eta}_t^* \tilde{\pi}^* \tilde{\omega}_{\tilde{R}} = \tilde{\eta}_t^* j_{\tilde{C}}^* \tilde{\omega} = j_{\tilde{C}}^* \tilde{\eta}_t^* \omega = j_{\tilde{C}}^* \tilde{\omega} = \tilde{\pi}^* \tilde{\omega}_{\tilde{R}} ,$$

and, since $\tilde{\pi}$ is surjective, it follows that $\tilde{\rho}_t^* \tilde{\omega}_{\tilde{R}} = \tilde{\omega}_{\tilde{R}}$ and the induced flow is symplectic.

The Hamiltonian $\tilde{h}$, being invariant under the group action, is constant on the leaves of the foliation, so it defines a reduced Hamiltonian by : $\tilde{h}_{\tilde{\mathcal{R}}} \circ \tilde{\pi} = \tilde{h} \circ j_{\tilde{C}}$,

which yields $\tilde{\pi}^* \mathbf{d}\tilde{h}_{\tilde{\mathcal{R}}} = j_{\tilde{C}}^* \mathbf{d}\tilde{h}$.

Taking the inner product with a vector $V_{\tilde{x}}$ of $T_{\tilde{x}}\tilde{C}$ results in :

$$\imath(\tilde{\pi}_{*|\tilde{x}}V_{\tilde{x}})\mathrm{d}\tilde{h}_{\tilde{\mathcal{R}}}([\tilde{x}]) = (j_{\tilde{C}}^{*}\tilde{\omega})(\tilde{\mathcal{H}}(\tilde{h})(\tilde{x}), V_{\tilde{x}}) = (\tilde{\pi}^{*}\tilde{\omega}_{\tilde{\mathcal{R}}})(\tilde{\mathcal{H}}(\tilde{h})(\tilde{x}), V_{\tilde{x}})$$
$$= \tilde{\omega}_{\tilde{\mathcal{R}}}(\tilde{\pi}_{*|\tilde{x}}\tilde{\mathcal{H}}(\tilde{h})(\tilde{x}), \tilde{\pi}_{*|\tilde{x}}V_{\tilde{x}}) .$$

This means that $\tilde{\pi}_{*|\tilde{x}}\tilde{\mathcal{H}}(\tilde{h})(\tilde{x})$ is the Hamiltonian vector field of $\tilde{h}_{\tilde{\mathcal{R}}}$ at $[\tilde{x}]$.
The derivation of $\tilde{\pi} \circ \tilde{\eta}_t = \tilde{\rho}_t \circ \tilde{\pi}$ with respect to t yields : $\tilde{\pi}_{*|\tilde{x}}\tilde{\mathcal{H}}(\tilde{h})(\tilde{x}) = \frac{d\tilde{\rho}_t}{dt}_{|t=0}(\tilde{\pi}(\tilde{x}))$, and the reduced flow $\tilde{\rho}_t$ is the flow generated from the reduced Hamiltonian $\tilde{h}_{\tilde{\mathcal{R}}}$.
This reduced Hamiltonian $\tilde{h}_{\tilde{\mathcal{R}}}$ on $(\tilde{\mathcal{R}}, \tilde{\omega}_{\tilde{\mathcal{R}}})$ defines thus a Cauchy problem of lower order whose solution yields the flow $\tilde{\rho}_t$ [4]. It is then possible, in principle, to reconstruct the flow $\tilde{\eta}_t$.
Following Abraham and Marsden ([AbM 81]), this proceeds as follows.
Given the flow $\tilde{\rho}_t$, solution of : $\frac{d\tilde{\rho}_t}{dt}([\tilde{x}_0]) = \tilde{\mathcal{H}}_{\tilde{\mathcal{R}}}(\tilde{h}_{\tilde{\mathcal{R}}})(\tilde{\rho}_t([\tilde{x}_0]))$, one aims to reconstruct $\tilde{\eta}_t(\tilde{x}_0) = (\eta_t(x_0), \xi_0)$, solution of : $\frac{d\tilde{\eta}_t}{dt}(\tilde{x}_0) = \tilde{\mathcal{H}}(\tilde{h})(\tilde{\eta}_t(\tilde{x}_0))$, where $\tilde{x}_0 = (x_0, \xi_0)$ is a given point of $\tilde{\pi}^{-1}([\tilde{x}_0])$. Let $\tilde{s}(t)$ be the image of $\tilde{\rho}_t([\tilde{x}_0])$ under an arbitrary section of $\tilde{\pi} : \tilde{C} \to \tilde{\mathcal{R}}$, i.e. $\tilde{\pi}(\tilde{s}(t)) = \tilde{\rho}_t([x_0])$, and such that $\tilde{s}(0) = \tilde{x}_0$.
One looks now for a group element $g(t)$ such that $g(o) = \nu$ and $\tilde{\eta}_t(\tilde{x}_0) = \tilde{\Phi}(g(t), \tilde{s}(t))$.
The derivative with respect to t yields : $\tilde{\mathcal{H}}(\tilde{h})(\tilde{\Phi}(g, \tilde{s})) = \tilde{\Phi}_{g*|\tilde{s}}\left(\frac{d\tilde{s}}{dt} + \tilde{\mathbf{X}}(\vec{u}, \tilde{s})\right)$,
where $\tilde{\mathbf{X}}(\vec{u})$ is the generator of the group action on $\tilde{M}$ and $\vec{u} = L_{g^{-1}*|g}\frac{dg}{dt} \in \mathcal{G}$.
Invariance of $\tilde{\mathcal{H}}(\tilde{h})$ yields : $\tilde{\mathcal{H}}(\tilde{h})(\tilde{\Phi}(g, \tilde{s})) = \tilde{\Phi}_{g*|\tilde{s}}\tilde{\mathcal{H}}(\tilde{h})(\tilde{s})$, so that :

$$\tilde{\mathcal{H}}(\tilde{h})(\tilde{s}) - \frac{d\tilde{s}}{dt} = \tilde{\mathbf{X}}(\vec{u}, \tilde{s}) .$$

This algebraic equation has a solution, since

$$\tilde{\pi}_{*|\tilde{s}}\frac{d\tilde{s}}{dt} = \tilde{\mathcal{H}}_{\mathcal{R}}(\tilde{h}_{\mathcal{R}}(\tilde{s}) = \tilde{\pi}_{*|\tilde{s}}\tilde{\mathcal{H}}(\tilde{h})(\tilde{s}) \Rightarrow \tilde{\mathcal{H}}(\tilde{h})(\tilde{s}) - \frac{d\tilde{s}}{dt} \in \mathcal{K}er\,\tilde{\pi}_{*|\tilde{s}} = \tilde{O}_{\tilde{s}} .$$

Having solved this algebraic problem, one is lefft with the differential equation :

$$\frac{dg(t)}{dt} = L_{g*|\nu}\vec{u} \text{ with } g(0) = \nu ,$$

whose solution (quadrature) is formally given by the anti-t-ordered product :

$$g(t) = \left(exp\left(\int_0^t \vec{u}(t')\,dt'\right)\right)_{-} .$$

[4] This however is not always easier, neither preferable as [KKS 78] shows.

Another relevant dynamical problem where the reduction procedure is essential, is the Yang-Mills gauge theory [5] of which a finite dimensional analogue is given below.
Let ϕ be a free and proper Lie group action of G on a configuration space Q and assume that, <u>by definition</u> , points of Q belonging to the same G-orbit are physically indistinguishable.
The "real" configuration space is thus the space of orbits i.e. the quotient $Q_r = Q/G$ and the "real" phase space is T^*Q_r. Points of Q_r can be described as equivalence classes of points of Q corresponding to the equivalence relation : $q' \cong_Q q$ iff $\exists\, g \in G \vdash q' = \phi(g, q)$.
With regularity conditions as above, Q_r is a manifold and there is a canonical submersion :

$$\sigma : Q \to Q_r : q \to [q] = \sigma(q) \quad \text{, such that} \quad \sigma \circ \phi(g) = \sigma .$$

The differential of σ is : $\sigma_* : TQ \to TQ_r : (q, \vec{v}_q) \to ([q], \sigma_{*|q}\vec{v}_q)$, and $\mathcal{K}er\,\sigma_{*|q}$ is the tangent space at q to the orbit $\phi(G, q)$. This kernel has a constant dimension so that $\mathcal{K}er\,\sigma_* = \bigcup_{q\in Q}(q, \mathcal{K}er\,\sigma_{*|q})$ is a subvector bundle of TQ.
Let $\phi^{TQ}{}_g$ denote the lifted G-action in the tangent bundle, it defines an equivalence relation in the tangent bundle TQ :

$$\left(V' = (q', \vec{v}'_{q'})\right) \cong_{TQ} \left(V = (q, \vec{v}_q)\right)$$
$$\text{iff } \exists\, g \in G \vdash \{q' = \phi(g, q) \text{ and } \vec{v}'_{q'} - \phi_{g*|q}\vec{v}_q \in \mathcal{K}er\,\sigma_{*|q'}\}$$
$$\text{or iff } \exists\, g \in G \vdash \{(V' - \phi^{TQ}{}_g V) \in \mathcal{K}er\,\sigma_*\} .$$

The space of equivalence classes forms the tangent bundle : $TQ_r = TQ/\cong_{TQ}$.
The dual bundle T^*Q_r of TQ_r is the symplectic manifold of interest.
Those elements $\mathbf{P} = (q, \mathbf{p}_q) \in T^*Q$ taking a constant value on the equivalence class $(q, \vec{v}_q) + \mathcal{K}er\,\sigma_{*|q}$, necessarily satisfy :

$$\left(\mathbf{P}, V\right) = 0 \text{ if } V \in \mathcal{K}er\,\sigma_* \quad \text{, or} \quad \mathbf{p}_q \in (\mathcal{K}er\,\sigma_{*|q})^0 .$$ [6]

The set $(\mathcal{K}er\,\sigma_*)^0 = \bigcup_{q\in Q}(\mathcal{K}er\,\sigma_{*|q})^0$ is a subbundle of T^*Q.
The action ϕ_g is lifted to an action Φ_g on the cotangent bundle T^*Q with its canonical Liouville one-form θ_0 and symplectic two-form $\omega_0 = -\mathrm{d}\theta_0$.

[5] See e.g. [M 80] for the general setting and [McM 87] for further developments more directly related to this seminar.
[6] The annihilator of a subspace E of the vector space F is the subspace $(E)^0$ of the dual space F^* consisting in those linear forms annihilating all vectors of E .

Such a lifted action is always Poisson with momentum mapping given by :

$$\langle J(q,\mathbf{p}_q) \,|\, \vec{u} \rangle \;=\; \imath(\mathbf{X}(\vec{u};q,\mathbf{p}_q))\, \theta_0(q,\mathbf{p}_q) \;=\; \mathbf{p}_q \cdot \vec{X}(\vec{u},q)\ ,$$

where $\vec{X}(\vec{u})$ is a generator of the group action ϕ on Q, and $\mathbf{X}(\vec{u})$ is the corresponding generator of the lifted group action Φ on T^*Q.

The subbundle $(\mathcal{K}er\ \sigma_*)^0$ is given by :

$$(\mathcal{K}er\ \sigma_*)^0 \;=\; \{\, (q,\mathbf{p}_q) \,|\, \mathbf{p}_q \cdot \vec{X}(\vec{u},q) = 0\ ,\ \forall\, \vec{u} \in \mathcal{G}\} \;=\; J^{-1}(0)$$

The group action Φ on T^*Q leaves $(\mathcal{K}er\ \sigma_*)^0$ invariant and induces a group action on it.

The quotient of this group action is the phase space looked for.

It coincides with the KKS reduced symplectic manifold :

$$T^*Q^{\mathcal{R}} \;=\; (\mathcal{K}er\ \sigma_*)^0/G \;=\; J^{-1}(0)/G \;=\; \mathcal{R}\,.$$

For a dynamical system with a gauge freedom, the Physics is defined only on the reduced manifold $\mathcal{R} = J^{-1}(0)/G$, i.e. the observables are the C^∞ functions on $\mathcal{R}$.

It may be that the description of the points of $\mathcal{R}$ in terms of local coordinates is cumbersome and that is is easier to describe the functions on $\mathcal{R}$ as equivalence classes of functions on M.

Also in the case of the reduction for systems with symmetry, the classical motion is restricted to $J^{-1}(\xi)$ and the dynamics reduces to solve for a Hamiltonian flow on

$$J^{-1}(\xi)/G_\xi \;\simeq\; \tilde{J}^{-1}(0)/G \;=\; \tilde{\mathcal{R}}\,.$$

The functions on $\tilde{\mathcal{R}}$ are the possible reduced Hamiltonians and can, in the same way as above, be described by equivalence classes of functions on $\tilde{M} = M \times \mathcal{O}$.

In a certain sense, the gauge reduction can be considered as a particular case of a symmetry reduction, namely when the orbit $\mathcal{O}$ is the trivial orbit so that $\tilde{M} = M \times \{0\} \simeq M$.

The physical content however is different.

Furthermore, in the case of a system with symmetry, it is expected that the reduction and the quantisation are not commutable since there may be quantum tunneling between constrained submanifolds corresponding to different coadjoint orbits.

In the case of a gauge system the question of this commutability remains largely unsettled (see e.g. [Lo 90],[Lo 91]).

In the sequel, we mainly concentrate on the gauge systems, leaving the case of the reduction with symmetry to a separate paragraph.

To describe the set $\mathcal{F}(\mathcal{R})$ of C^∞ functions on $\mathcal{R} = J^{-1}(0)/G$, one observes that those functions on M whose difference vanish on the constraint manifold, $C = J^{-1}(0)$, actually define a unique function on it.

Also the functions vanishing on C form an ideal in the ring $\mathcal{F}(M)$ of C^∞ functions on M.

Let $\{\vec{e}_\alpha\ ,\ \alpha = 1,2,...,\mathrm{N}\}$ be a basis of the Lie algebra $\mathcal{G}$ with dual basis of $\mathcal{G}^*$ given by :

$$\{\epsilon^\alpha\ ,\ \alpha = 1,2,...,\mathrm{N}\}$$

and structure constants defined by :

$$[\vec{e}_\alpha, \vec{e}_\beta] \;=\; \vec{e}_\gamma\, f^\gamma_{\alpha\beta}\ .$$

Define $\Psi_\alpha(x) = \langle J(x) \,|\, \vec{e}_\alpha \rangle$, then equivariance implies :

$$\{\Psi_\alpha, \Psi_\beta\} \;=\; \Psi_\gamma\, f^\gamma_{\alpha\beta}\ ,$$

so that the constraint manifold :

$$C \;=\; \{x \in M \,|\, \Psi_\alpha(x) \;=\; 0\ ,\ \alpha \;=\; 1,2,...,\mathrm{N}\}\ ,$$

is obviously co-isotropic in M (first class in Dirac's terminology).

The origin in $\mathcal{G}^*$ is a regular point of the momentum map if and only if the exterior product

$$\mathbf{d}\Psi_1 \wedge \mathbf{d}\Psi_2 \wedge ... \wedge \mathbf{d}\Psi_\mathrm{N}$$

does not vanish when restricted to C.

In algebraic terms, one says that the elements $\{\Psi_1, \Psi_2, \cdots, \Psi_\mathrm{N}\}$ of the ring $\mathcal{F}(M)$, form a regular sequence.

This means that, if $\mathcal{I}_k$ is the ideal in $\mathcal{F}(M)$, generated by $\{\Psi_1, \Psi_2, ..., \Psi_k\}$, then, for $k = 1,2,...,\mathrm{N}$:

Ψ_k is not a zero divisor of the quotient ring $\mathcal{F}(M)/\mathcal{I}_{k-1}$

or, in other words, if $f\,.\,\Psi_k \in \mathcal{I}_{k-1}$ then $f \in \mathcal{I}_{k-1}$.

Let $\mathcal{I}_\mathrm{N}$ be the ideal of functions vanishing on C, then one identifies :

$$\mathcal{F}(C) \;=\; \mathcal{F}(M)/\mathcal{I}_\mathrm{N}\,.$$

To define a function on the reduced manifold, the functions on C must be constant on the leaves of the foliation.

These leaves are the G-orbits so that $\mathcal{F}(\mathcal{R})$ is identified with the set of G-invariant functions on C :

$$\mathcal{F}(\mathcal{R}) = \frac{\{f \in \mathcal{F}(M) \mid \{f, \Psi_\alpha\} \in \mathcal{I}_N \,,\, \forall\alpha\}}{\mathcal{I}_N} \quad .$$

The reduced manifold itself is also given by a quotient :

$$\mathcal{R} = \frac{\{x \in M \mid \Psi_\alpha(x) = 0 \,,\, \forall\alpha\}}{G} \quad .$$

However the important difference between the two quotients is that the numerator in the expression for $\mathcal{F}(\mathcal{R})$ is not given by <u>a set of equations</u> as in the expression for $\mathcal{R}$.

Naturally $\{f, \Psi_\alpha\} \in \mathcal{I}_N$ implies that $\{f, \Psi_\alpha\}$ is some linear combination of the Ψ's with unspecified functions U_α^β : /par $\{f, \Psi_\alpha\} = \Psi_\beta\, U_\alpha^\beta$,

The classical BRST approach aims to describe the observables also as a quotient of a numerator which is a subalgebra of a super-Poisson algebra, given by equations, by the equivalence relation defined by an ideal in this subalgebra.

This is achieved through the cohomological constructions in the next two sections.

3. The cohomological description of the physical observables

3.a) Let K be a N-dimensional $\mathcal{F}(M)$-module, with basis $\{\vec{e}_1, \vec{e}_2, ..., \vec{e}_N\}$, and let K^* be its dual with dual basis $\{\epsilon_1, \epsilon_2, ..., \epsilon_N\}$.

To the sequence of elements $\{\Psi_1, \Psi_2, ..., \Psi_N\}$ of the ring $\mathcal{F}(M)$ one associates

$\Psi = \sum_{\alpha=1}^{N} \epsilon^\alpha\, \Psi_\alpha \in K^*$.

The exterior algebra,

$$(\bigwedge K = \bigoplus_{k \in Z} \wedge^k K) \,, +, \wedge$$

is a Z-graded algebra over the ring $\mathcal{F}(M)$, with the usual conventions that:

$\wedge^0 K = \mathcal{F}(M)$ and $\wedge^k K = \{0\}$, when $k < 0$, or $k > N$.

The Z-grading obviously induces a Z_2-grading by dividing $\bigwedge K$ in even and odd elements.

It is graded commutative , i.e.

$\forall\, X_k \in \wedge^k K$ and $Y_l \in \wedge^l K$ one has :

$X_k \wedge Y_l = (-1)^{kl}\, Y_l \wedge X_k$.

A graded derivation of grade g is a local, linear map $D_g : \bigwedge K \longrightarrow \bigwedge K$, such that each homogeneous component $\wedge^k K$ is sent in $\wedge^{k+g} K$, and a graded Leibniz rule holds :

$D_g(X_k \wedge Y_l) = (D_g X_k) \wedge Y_l + (-1)^{gk}\, X_k \wedge (D_g Y_l)$.

It can be shown that a graded derivation is completely defined by its action on $\wedge^0 K = \mathcal{F}(M)$ and on $\wedge^1 K = K$, which together generate all of $\bigwedge K$.

The graded commutator of two graded derivations is defined as :

$[D_1 \,,\, D_2] = D_1 \circ D_2 - (-1)^{g_1 g_2} D_2 \circ D_1$.

It is also a graded derivation and its grade is $(g_1 + g_2)$.

This commutator endowes $\mathcal{D}er(\bigwedge K)$, the set of all graded derivations, with the structure of a graded Lie algebra, satisfying the (graded) properties :

a) antisymmetry : $[D_1 \,, D_2] = -(-1)^{g_1 g_2}\, [D_2 \,, D_1]$

b) Jacobi identity : $[D_1 \,, [D_2 \,, D_3]] = [[D_1 \,, D_2] \,, D_3] + (-1)^{g_1 g_2}\, [D_2 \,, [D_1 \,, D_3]]$.

The derivations of even grade form by themselves an ordinary Lie algebra, of which $\mathcal{D}er^0(\bigwedge K)$, the set of derivations of zero grade, forms a Lie subalgebra.

The interior product of an element of $\bigwedge K$ with an element Ψ of K^* is the derivation of grade minus one, defined by :

$$\forall f \in \mathcal{F}(M) : \quad \imath(\Psi) f = 0$$

$$\forall X \in K : \quad \imath(\Psi) X = \langle \Psi | X \rangle .$$

The commutator of $\imath(\Psi)$ with itself vanishes :

$$[\imath(\Psi), \imath(\Psi)] = 2\,\imath(\Psi)^2 = 0 ,$$

so that $\imath(\Psi)$ defines a boundary operator on the complex $\bigwedge K$.

The k-cycles form an $\mathcal{F}(M)$-submodule of $\wedge^k K$: $Z_k(K, \imath(\Psi)) = \wedge^k K \cap \mathcal{K}er\, \imath(\Psi)$,

and the k-boundaries are defined by : $B_k(K, \imath(\Psi)) = \wedge^k K \cap \mathcal{I}m\, \imath(\Psi)$.

Obviously $B_k(K, \imath(\Psi)) \subseteq Z_k(K, \imath(\Psi))$ and the k-th homology module [7] is the quotient :

$$H_k(K, \imath(\Psi)) = Z_k(K, \imath(\Psi)) \,/\, B_k(K, \imath(\Psi)) .$$

Using the algebraic formulation of the regularity condition on Ψ, it is easy to show that for all k different from zero, every k-cycle is a k-boundary and the homology is trivial :

$$H_k(K, \imath(\Psi)) = \{0\} , \ \forall\, k \neq 0 .$$

When $k = 0$, the cycles and boundaries are respectively given by :

$$Z_0(K, \imath(\Psi)) = \mathcal{F}(M) \text{ and}$$

$$B_0(K, \imath(\Psi)) = \{ \imath(\Psi) X \,|\, X \in K \} = \{ \textstyle\sum \Psi_\alpha X^\alpha \,|\, X^\alpha \in \mathcal{F}(M) \} = \mathcal{I}_{\mathrm{N}} .$$

The zero-th homology module is thus obtained as :

$$H_0(K, \imath(\Psi)) = \mathcal{F}(M)/\mathcal{I}_{\mathrm{N}} = \mathcal{F}(C) .$$

3.b) So far the module K may be any N-dimensional free $\mathcal{F}(M)$-module but, in order to define a Lie algebra action on it, K is taken as the tensor product of the Lie algebra $\mathcal{G}$ with the ring $\mathcal{F}(M)$: $K = \mathcal{G} \otimes \mathcal{F}(M)$, so that

$$\wedge^k K = \wedge^k \mathcal{G} \otimes \mathcal{F}(M) \quad \text{and} \quad \bigwedge K = \bigwedge \mathcal{G} \otimes \mathcal{F}(M) .$$

This $\mathcal{F}(M)$-module carries a representation of $\mathcal{G}$ induced by the adjoint representation of $\mathcal{G}$ in itself and by the action of the generators of the infinitesimal transformations on $\mathcal{F}(M)$.

The representation is a Lie algebra homomorphism :

$$D_\Psi : \mathcal{G} \to \mathcal{D}er^0(\textstyle\bigwedge K) : \vec{u} \to D_\Psi(\vec{u}) .$$

[7] This construction is known as the Koszul resolution of the ring $\mathcal{F}(M)$ relative to the sequence $\{\Psi_1, ..., \Psi_{\mathrm{N}}\}$ (see [K 50] and [DV 87]).

The derivation $D_\Psi(\vec{u})$ is defined on $f \in \mathcal{F}(M)$ by :

$$D_\Psi(\vec{u}) f = \{\Psi(\vec{u}), f\} ,$$

and on $X = \vec{e}_\alpha X^\alpha \in K$ by :

$$D_\Psi(\vec{u})(\vec{e}_\alpha X^\alpha) = \mathrm{ad}(\vec{u})\, \vec{e}_\alpha X^\alpha + \vec{e}_\alpha \{\Psi(\vec{u}), X^\alpha\} ,$$

whith the adjoint representation of $\mathcal{G}$ in $\mathcal{G}$ given by : $\mathrm{ad}(\vec{u})\, \vec{v} = [\vec{u}, \vec{v}]$.

The graded commutator of this derivation $D_\Psi(\vec{u})$ with the boundary operator $\imath(\Psi)$ is a graded derivation which vanishes obviously on $\mathcal{F}(M)$:

$$[\, D_\Psi(\vec{u}), \imath(\Psi) \,] f = 0 .$$

On K it yields :

$$\begin{aligned}
[\, D_\Psi(\vec{u}), \imath(\Psi) \,](\vec{e}_\alpha X^\alpha) &= D_\Psi(\vec{u})(\Psi_\alpha X^\alpha) - \imath(\Psi)\Big([\vec{u}, \vec{e}_\alpha] X^\alpha + \vec{e}_\alpha \{ \Psi(\vec{u}), X^\alpha \}\Big) \\
&= \{ \Psi(\vec{u}), \Psi_\alpha X^\alpha \} - \Psi([\vec{u}, \vec{e}_\alpha]) X^\alpha - \Psi_\alpha \{ \Psi(\vec{u}), X^\alpha \} \\
&= \Big(\{ \Psi(\vec{u}), \Psi_\alpha \} - \Psi([\vec{u}, \vec{e}_\alpha]) \Big) X^\alpha = 0 .
\end{aligned}$$

It follows that these two derivations $D_\Psi(\vec{u})$ and $\imath(\Psi)$ commute on all $\bigwedge K$ so that the representation $D_\Psi(\vec{u})$ induces a representation of $\mathcal{G}$ in the homology algebra.

In particular $H_0(K, \imath(\Psi)) = \mathcal{F}(C)$ carries a representation of $\mathcal{G}$.

In general, when there is a representation D of a Lie algebra $\mathcal{G}$ in a module V, one defines the Chevalley cohomology of $\mathcal{G}$ with values in V as follows.

The ℓ-cochains are the alternate ℓ-linear forms on $\mathcal{G}$ with values in V :

$$C^\ell_{\mathrm{Chev}}(\mathcal{G}, V) = \wedge^\ell \mathcal{G}^* \otimes V ,$$

with the convention that $C^\ell_{\mathrm{Chev}}(\mathcal{G}, V) = 0$, when $\ell < 0$ or $\ell > \mathrm{N}$ and $C^0_{\mathrm{Chev}}(\mathcal{G}, V) = V$.

The direct sum

$$\bigoplus_\ell C^\ell_{\mathrm{Chev}}(\mathcal{G}, V) = \bigwedge \mathcal{G}^* \bigotimes V$$

has a coboundary operator, $\delta : C^\ell_{\mathrm{Chev}}(\mathcal{G}, V) \to C^{\ell+1}_{\mathrm{Chev}}(\mathcal{G}, V) : c \to \delta c$, defined by :

$$\begin{aligned}
(\delta c)(\vec{u}_1, \vec{u}_2, ..., \vec{u}_{\ell+1}) &= \sum_{i=1}^{\ell+1} (-1)^{i+1} D(\vec{u}_i) c(\, \vec{u}_1, ..., \overbrace{\vec{u}_i}^{omit}, ..., \vec{u}_{\ell+1} \,) \\
&+ \sum_{i<j}^{\ell+1} (-1)^{i+j} c(\, [\vec{u}_i, \vec{u}_j], \vec{u}_1, ..., \overbrace{\vec{u}_i}^{omit}, ..., \overbrace{\vec{u}_j}^{omit}, ..., \vec{u}_{\ell+1} \,)
\end{aligned}$$

An alternative definition of this coboundary operator δ on $\bigwedge \mathcal{G}^* \bigotimes V$ is :

$$\delta\Big(\Theta \otimes \mathbf{a} \Big) = \delta_o \Theta \otimes \mathbf{a} + \big(\epsilon^\alpha \wedge \Theta \big) \otimes D(\vec{e}_\alpha)\, \mathbf{a} \,,$$

where δ_o is the derivation of grade + 1 on the graded algebra $\bigwedge \mathcal{G}^*$ over the real numbers, defined by its action on R and on $\mathcal{G}^*$:

$$\delta_o(1) = 0 \quad \text{and} \quad \delta_o \epsilon^\alpha = -\tfrac{1}{2} f^\alpha{}_{\beta\gamma}\, \epsilon^\beta \wedge \epsilon^\gamma \,.$$

The square of δ vanishes and one defines :

$$Z^\ell_{\text{Chev}}(\mathcal{G}, V) = \mathcal{K}er\, \delta \cap C^\ell_{\text{Chev}}(\mathcal{G}, V) \,, \text{ the } \ell\text{-cocycles} \,,$$

$$B^\ell_{\text{Chev}}(\mathcal{G}, V) = \mathcal{I}m\, \delta \cap C^\ell_{\text{Chev}}(\mathcal{G}, V) \,, \text{ the } \ell\text{-coboundaries.}$$

The ℓ-th cohomology module is :

$$H^\ell_{\text{Chev}}(\mathcal{G}, V) = Z^\ell_{\text{Chev}}(\mathcal{G}, V) \,/\, B^\ell_{\text{Chev}}(\mathcal{G}, V) \,.$$

In particular, the zero-th cohomology is obtained as :

$$Z^0_{\text{Chev}}(\mathcal{G}, V) = \{ \mathbf{a} \in V \mid \forall\, \vec{u} \in \mathcal{G} \,,\, D(\vec{u})\mathbf{a} = 0 \} \text{ and}$$

$$B^0_{\text{Chev}}(\mathcal{G}, V) = \{ 0 \}, \text{ so that}$$

$$H^0_{\text{Chev}}(\mathcal{G}, V) = Z^0_{\text{Chev}}(\mathcal{G}, V) \,,$$

and these are the elements of V annihilated by the Lie algebra $\mathcal{G}$.

They are invariant under the Lie group G, obtained by exponentiation of the Lie algebra.

Choosing $H_0\big(K, \imath(\Psi) \big)$ as the $\mathcal{F}(M)$-module with its induced representation of $\mathcal{G}$, the physical observables are obtained as :

$$\mathcal{F}(\mathcal{R}) = H^0_{\text{Chev}}\big(\mathcal{G} \,,\, H_0(K, \imath(\Psi)) \big) \,.$$

3.c) It is "natural" in homological algebra (see e.g. [BT 82]) to associate a bi-graded complex to the above two, homological and cohomological, complexes :

$$L = \bigoplus_{k,\ell} L^\ell_k \quad \text{, where} \quad L^\ell_k = \wedge^\ell \mathcal{G}^* \otimes \wedge^k \mathcal{G} \otimes \mathcal{F}(M) \,.$$

A "horizontal" boundary operator is defined on each homogeneous term by :

$$\partial^\ell_k \,:\, L^\ell_k \to L^\ell_{k-1} \,:\, \Theta_\ell \otimes U_k \otimes f \;\to\; \Theta_\ell \otimes \imath(\Psi) U_k \otimes f \,.$$

And a "vertical" coboundary operator :

$$\delta^\ell_k \,:\, L^\ell_k \to L^{\ell+1}_k \,:\, \Theta_\ell \otimes U_k \otimes f \;\to\; \delta_o \Theta_\ell \otimes U_k \otimes f + \big(\epsilon^\alpha \wedge \Theta_\ell \big) \otimes D_\Psi(\vec{e}_\alpha)\big(U_k \otimes f \big) \,,$$

with, as before :

$$D_\Psi(\vec{e}_\alpha)\big(U_k \otimes f \big) = \big(\mathbf{ad}(\vec{e}_\alpha) U_k \big) \otimes f + U_k \otimes \{ \Psi_\alpha \,,\, f \} \,.$$

Since $\imath(\Psi)$ commutes with $D_\Psi(\vec{e}_\alpha)$, these operators also commute :

$$\partial^{\ell+1}_k \circ \delta^\ell_k = \delta^\ell_{k-1} \circ \partial^\ell_k \,.$$

Reshuffling the direct sum, one writes

$$L = \bigoplus_h L^h \quad \text{, with} \quad L^h = \bigoplus_{\substack{k,\ell \\ \ell - k = h}} L^\ell_k \,.$$

The difference $(\ell - k) = h$ is called the ghost number and varies from - N to + N .

On each L^ℓ_k, one defines the operator [8] :

$$\Delta^\ell_k = \delta^\ell_k + (-1)^\ell \partial^\ell_k \,,$$

whose image is in $L^{\ell+1}_k \oplus L^\ell_{k-1} \subset L^{\ell-k+1}$.

Taking the direct sum of these operators over all ℓ and k such that the difference $\ell - k = h$ remains fixed, defines an operator : $\Delta^h : L^h \to L^{h+1}$, such that $\Delta^{h+1} \circ \Delta^h = 0$.

There is thus a $(L \,,\, \Delta)$ cohomology, with

$$Z^h(L, \Delta) = \mathcal{K}er\, \Delta \cap L^h \,, \text{ the } h\text{-cocycles,}$$

$$B^h(L, \Delta) = \mathcal{I}m\, \Delta \cap L^h \,, \text{ the } h\text{-coboundaries,}$$

and the h-th cohomology module is :

$$H^h(L, \Delta) = B^h(L, \Delta) \,/\, Z^h(L, \Delta) \,.$$

An h-cocycle γ is an element of L^h such that $\Delta^h \gamma = 0$, for example the sum $\gamma = A + B + C$ of fig.2 below, with $A \in L^{\ell-1}_{k-1}$, $B \in L^\ell_k$ and $C \in L^{\ell+1}_{k+1}$ such that :

$$(-1)^{\ell-1}\, \partial^{\ell-1}_{k-1} A = 0 \,,\; \delta^{\ell-1}_{k-1} A + (-1)^\ell\, \partial^\ell_k B = 0 \,,$$

$$\delta^\ell_k B + (-1)^{\ell+1}\, \partial^{\ell+1}_{k+1} C = 0 \text{ and } \delta^{\ell+1}_{k+1} C = 0 \,.$$

An h-coboundary β is a cochain of L^h such that $\beta = \Delta^{h-1} \sigma$, with $\sigma \in L^{h-1}$, for example $\beta = A + B + C$, and $\sigma = A' + B' + C' + D'$ such that :

$$(-1)^{\ell-2}\, \partial^{\ell-2}_{k-1} A' = 0 \quad , \quad \delta^{\ell-2}_{k-1} A' + (-1)^{\ell-1}\, \partial^{\ell-1}_k B' = A \,,$$

$$\delta^{\ell-1}_k B' + (-1)^\ell\, \partial^\ell_{k+1} C' = B \quad , \quad \delta^\ell_{k+1} C' + (-1)^{\ell+1}\, \partial^{\ell+1}_{k+2} D' = C \,,$$

$$\text{and } \delta^{\ell+1}_{k+2} D' = 0 \,.$$

[8] For the cohomological considerations below, other linear combinations would also do the job.

The figure below exhibits an h-cocycle and an h-coboundary :

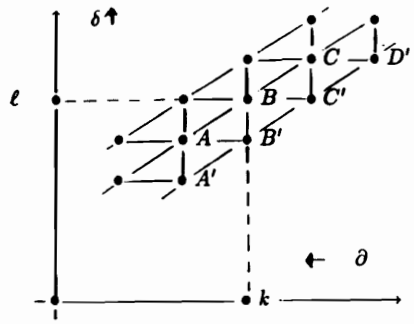

fig.2 The bigraded complex L

Since ∂ does not act on the first factor in the product $\wedge^\ell \mathcal{G}^* \otimes \wedge^k \mathcal{G} \otimes \mathcal{F}(M)$, the k-cycles and the k-boundaries, with ℓ fixed, are just tensor products :

$$Z_k(\wedge^\ell \mathcal{G}^* \otimes K\,,\,\partial) = \wedge^\ell \mathcal{G}^* \otimes Z_k(K, \imath(\Psi)) \quad \text{and}$$

$$B_k(\wedge^\ell \mathcal{G}^* \otimes K\,,\,\partial) = \wedge^\ell \mathcal{G}^* \otimes B_k(K, \imath(\Psi)) \ .$$

In the quotient the factor $\wedge^\ell \mathcal{G}^*$ cancels and the homology is :

$$H_k(\wedge^\ell \mathcal{G}^* \otimes K\,,\,\partial) = H_k(K\,,\,\imath(\Psi)) \ .$$

When the sequence Ψ_μ is regular, the homology is, as before, trivial for $k > 0$:

$$Z_k(\wedge^\ell \mathcal{G}^* \otimes K\,,\,\partial) = B_k(\wedge^\ell \mathcal{G}^* \otimes K\,,\,\partial) \ .$$

For $k = 0$: $Z_0(\wedge^\ell \mathcal{G}^* \otimes K\,,\,\partial) = \wedge^\ell \mathcal{G}^* \otimes \mathcal{F}(M)$ and

$$B_0(\wedge^\ell \mathcal{G}^* \otimes K\,,\,\partial) = \wedge^\ell \mathcal{G}^* \otimes \mathcal{I}_N \ .$$

The canonical projection of the 0-cycles of $Z_0(K\,,\,\imath(\Psi))$, i.e. the functions of $\mathcal{F}(M)$, on their cohomology class, i.e. the functions of $\mathcal{F}(C)$, defines the projections :

$$\pi^\ell : \wedge^\ell \mathcal{G}^* \otimes \mathcal{F}(M) = L^\ell_0 \to \wedge^\ell \mathcal{G}^* \otimes H_0(K, \imath(\Psi)) = C^\ell_{\text{Chev}}\Big(\mathcal{G}, H_0(K, \imath(\Psi))\Big) \ .$$

With this projection the bigraded comples L of fig.2 is extended to the left by the column of Chevalley ℓ-cochains, on which the coboundary δ^ℓ has been defined above.

Since $\delta^\ell \circ \pi^\ell = \pi^{\ell+1} \circ \delta^\ell_0$, the extended diagram :

$$\begin{array}{ccccccc}
\uparrow & & \uparrow & & \uparrow & & \\
C^{\ell+1}_{\text{Chev}} & \longleftarrow \ \pi^{\ell+1} \ \text{---} & L^{\ell+1}_0 & \longleftarrow \ \partial^{\ell+1}_1 \ \cdot & L^{\ell+1}_1 & \longleftarrow & \\
\uparrow \delta^\ell & & \uparrow \delta^\ell_0 & & \uparrow \delta^\ell_1 & & \\
C^\ell_{\text{Chev}} & \longleftarrow \ \pi^\ell \ \text{---} & L^\ell_0 & \longleftarrow \ \partial^\ell_1 \ \text{---} & L^\ell_1 & \longleftarrow & \\
\uparrow & & \uparrow & & \uparrow & &
\end{array}$$

is commutative also in the first two columns.

The exactness of the completed horizontal sequences of homomorphisms implies the following proposition :

$$H^h(L, \Delta) = \begin{cases} H^h_{\text{Chev}}\Big(\mathcal{G}\,,\, H_0(K, \imath(\Psi))\Big) & \text{, if } h \geq 0 \ ; \\ \{\,0\,\} & \text{, otherwise} \ . \end{cases}$$

The proof, an "elementary exercise in diagram chasing", will be sketched below.

1 : To each cohomology class $\hat{c}$ of $H^h_{\text{Chev}}\Big(\mathcal{G}, H_0\big((K, \imath(\Psi))\big)\Big)$, where $h \geq 0$, there corresponds a cohomology class of $H^h(L, \Delta)$.

Indeed, let c be a representative Chevalley h-cocycle of $\hat{c}$, then $\delta^h c = 0$ and, since π^h is surjective, $\exists A \in L^h_0$ such that $\pi^h A = c$.

The commutativity of the extended diagram implies :

$$\pi^{h+1}(\delta^h_0(A)) = \delta^h(\pi^h(A)) = 0 \ .$$

So $\delta^h_0 A$ is a boundary and $\exists B \in L^{h+1}_1$ such that

$$\delta^h_0 A + (-1)^{h+1} \partial^{h+1}_0 B = 0 \ .$$

If $\delta^{h+1}_1 B = 0$, then $\gamma = A + B$ is a h-cocycle defining a cohomology class $[\gamma] \in H^h(L, \Delta)$.

Even if $\delta^{h+1}_1 B \neq 0$, there still holds :

$$\partial^{h+2}_1(\delta^{h+1}_1(B)) = \delta^{h+1}_0(\partial^{h+1}_1(B)) = -(-1)^{h+1}\, \delta^{h+1}_0(\delta^h_0(A)) = 0,$$

so $\delta^{h+1}_0 B$ is a 1-cycle and, the homology being trivial, it is a 1-boundary .

There exists thus a chain $C \in L^{h+2}_2$ such that

$$\delta^{h+1}_0 B + (-1)^{h+2} \partial^{h+2}_2 C = 0 \ .$$

Again, if $\delta^{h+2}_2 C = 0$, a cocycle $\gamma' = A + B + C$ is obtained defining a cohomology class $[\gamma']$ of $H^h(L, \Delta)$.

If $\delta_2^{h+2} C \neq 0$, one proceeds as above and, after a finite number of steps, the sequence $\{ A, B, \cdots, Z \}$ will eventually reach the top of the diagram[9], where $h = \mathrm{N}$ and $\delta(\cdots) = 0$, obtaining a cocycle $\gamma^{fin} = A + B + \cdots + Z$ and a cohomology class $[\gamma^{fin}]$.

It is left as an exercise for the reader to show that the various choices involved in constructing the cocycle γ^{fin} define ultimately the same cohomology class of $H^h(L, \Delta)$.

2 : Conversely a cohomology class of $H^h(L, \Delta)$ is represented by a h-cocycle :

$$\gamma = A + B + C + \cdots \quad \text{with} \quad \Delta\gamma = 0 .$$

If $h > 0$ one has : $A \in L_0^h$, $B \in L_1^{h+1}$, ... and in particular :

$$\delta_0^h A + (-1)^{h+1} \partial_1^{h+1} B = 0 .$$

So $\delta_0^h A$ is a boundary and

$$\delta^h(\pi^h(A)) = \partial_0^{h+1}(\delta_0^h(A)) = 0 ,$$

Thus $c = \pi^h(A)$ is a cocycle of $Z^h_{\mathrm{Chev}}\Big(\mathcal{G}, H_0\big(K, \imath(\Psi)\big)\Big)$, and defines a cohomology class $\hat{c}$.

Again we leave it to the reader to show that this cohomology class $\hat{c}$ does not depend on the choices made. Furthermore, an h-cocycle that does not contain a component in L_0^h has a trivial cohomology class.

Finally, when $h < 0$, one hits the bottom of the diagram, where everything is again trivial so that $H^h(L, \Delta) = \{0\}$.

Applying the proposition when the ghost number $h = 0$, one obtains the set of physical observables as the quotient :

$$\mathcal{F}(\mathcal{R}) = H^0(L, \Delta) = \frac{\{ \Gamma \in L^0 \,|\, \Delta\Gamma = 0 \}}{\{ \Delta(L^{-1}) \}}$$

[9] This kind of proof apparently does not hold for ∞-dimensional groups, which appear in gauge field theories, at least without further assumptions.

4. The super Poisson structure

Following [KS 87], the complex L will be identified with a super-Poisson[10]algebra, $\mathcal{P}$, with bracket $\{ \ , \ \}_\Sigma$. There are two distinguished elements in this algebra, the nilpotent BRST charge, Ω, and the ghost number, Φ. These elements are such that the action of the coboundary operator Δ on an element in L amounts to take the bracket of the corresponding element in $\mathcal{P}$ with Ω : $\Delta\Gamma \Leftrightarrow \{\Omega, \Gamma\}_\Sigma$, and the ghost number does what its name says : $\{\Phi, \Gamma\}_\Sigma = h\Gamma$ if and only if $\Gamma \in L^h$.

This construction proceeds in several steps.

4.a) Let $\mathbf{V}$ be a vector space[11] over the real number field R, endowed with a scalar product : $\eta : \mathbf{V} \times \mathbf{V} \to R : (\mathbf{a}, \mathbf{b}) \to \eta(\mathbf{a}, \mathbf{b})$.

The Clifford algebra associated with this scalar product $\mathcal{C}l(\mathbf{V}, \eta)$ can be defined as the quotient of the tensor algebra $\mathbf{T}(\mathbf{V}) = R \oplus \mathbf{V} \oplus (\mathbf{V} \otimes \mathbf{V}) \otimes \cdots$, by the ideal $\mathcal{I}(\eta)$ generated by the elements of the form :

$$(\mathbf{a} \otimes \mathbf{b}) \oplus (\mathbf{b} \otimes \mathbf{a}) \oplus (-2\eta(\mathbf{a}, \mathbf{b})\, \mathbf{I}) .$$

In other words $\mathcal{C}l(\mathbf{V}, \eta)$ is the algebra over R, generated by a basis $(\mathbf{e}_i \,;\, i = 1, 2, \cdots, \mathrm{M})$ of $\mathbf{V}$ with the Clifford product, denoted $\bullet$, obeying :

$$\mathbf{e}_i \bullet \mathbf{e}_j + \mathbf{e}_j \bullet \mathbf{e}_i = 2\eta_{ij} .$$

The Z-grading of $\mathbf{T}(\mathbf{V})$ reduces to a Z_2-grading of the Clifford algebra since the defining relations above involve only even elements.

The decomposition of $\mathcal{C}l(\mathbf{V}, \eta)$[12] into even and odd elements is :

$$\mathcal{C}l(\mathbf{V}, \eta) = \mathcal{C}_0 + \mathcal{C}_1 : \mathbf{A} = \mathbf{A}_0 + \mathbf{A}_1 ,$$

where $\mathbf{A}_0$ is a sum of products of an even number of generators, and $\mathbf{A}_1$ is a sum of products of an odd number of generators.

Since the Clifford product respects the grading, $(\mathcal{C}l(\mathbf{V}, \eta), +, \bullet)$, becomes an associative super-algebra. The super-commutator of two homogeneous elements $\mathbf{A}$ and $\mathbf{B}$, respectively of grade a and b ($\in Z_2$), is defined as :

$$[\mathbf{A}, \mathbf{B}] = \mathbf{A} \bullet \mathbf{B} - (-1)^{ab}\, \mathbf{B} \bullet \mathbf{A} .$$

[10] The terminology "super" stems from the Physics litterature and means Z_2-graded.

[11] Vectors of $\mathbf{V}$ are denoted by lower case boldface characters **a**, **b**,...

[12] Elements of the Clifford algebra are denoted by upper case boldface characters **A**,**B**,...

With this super-commutator, $\mathcal{C}l(\mathbf{V},\eta)$ adquires the structure of a Lie super-algebra.

The super-commutator is obviously bilinear and, for homogeneous elements, it satisfies :

a) $[\mathbf{A},\mathbf{B}] = -(-1)^{ab}[\mathbf{B},\mathbf{A}]$, super-antisymmetry ,

b) $[\mathbf{A},[\mathbf{B},\mathbf{C}]] = [[\mathbf{A},\mathbf{B}],\mathbf{C}] + (-1)^{ab}[\mathbf{B},[\mathbf{A},\mathbf{C}]]$, super-Jacobi identity .

A Z-filtering is introduced in both $\mathcal{C}_0$ and $\mathcal{C}_1$ by :

$\mathcal{C}^{2k} = \{\mathbf{A}_0 \in \mathcal{C}_0 \,|\, \mathbf{A}_0$ is a sum of products of at most 2k vectors of $\mathbf{V}\}$

$\mathcal{C}^{2k+1} = \{\mathbf{A}_1 \in \mathcal{C}_1 \,|\, \mathbf{A}_1$ is a sum of products of at most 2k+1 vectors of $\mathbf{V}\}$.

Clearly :

$\mathcal{C}^0 \subset \mathcal{C}^2 \subset \cdots \subset \mathcal{C}^{2k} \subset \cdots$, $\mathcal{C}^1 \subset \mathcal{C}^3 \subset \cdots \subset \mathcal{C}^{2k+1} \subset \cdots$, and

$\mathcal{C}_0 = \cup_k \mathcal{C}^{2k}$, $\mathcal{C}_1 = \cup_k \mathcal{C}^{2k+1}$.

The super-commutator $[\mathbf{A},\mathbf{B}]$ of elements $\mathbf{A} \in \mathcal{C}^m$ and $\mathbf{B} \in \mathcal{C}^n$ belongs to $\mathcal{C}^{m+n-2}$ since the terms of the highest possible grade (m + n) cancel.

Taking the quotient of $\mathcal{C}^m$ by $\mathcal{C}^{m-2}$ yields an equivalence class[13] of elements of $\mathcal{C}^m$ which is determined by a sum of completely antisymmetrized products of vectors, since replacing any product $\mathbf{a} \bullet \mathbf{b}$ by $-\mathbf{b} \bullet \mathbf{a}$ in the terms of highest degree amounts to add a term where $\mathbf{a} \bullet \mathbf{b}$ is replaced by the scalar $2\eta(\mathbf{a},\mathbf{b})$ and this is absorbed by $\mathcal{C}^{m-2}$. It is thus possible to identify the quotient $\mathcal{C}^m / \mathcal{C}^{m-2}$ with $\bigwedge^m(\mathbf{V})$ and this is in fact an algebra identification, since the Clifford product induces naturally a product in $\bigoplus_m \mathcal{C}^m/\mathcal{C}^{m-2}$ which coincide with the exterior product in $\bigwedge \mathbf{V} = \bigoplus_m \bigwedge^m(\mathbf{V})$. The exterior algebra $\bigwedge \mathbf{V}$ is Z-graded (hence also Z_2-graded) and the wedge product is super-commutative.

Furthermore, if $\mathbf{A}$ and $\mathbf{B}$ are representatives of $\hat{A}_m \in \bigwedge^m(\mathbf{V})$ and $\hat{B}_n \in \bigwedge^n(\mathbf{B})$, then the quotient of the super-commutator $[\mathbf{A},\mathbf{B}]$ by $\mathcal{C}^{m+n-4}$ does not depend on the choosen representatives and determines an element of $\mathcal{C}^{m+n-2} / \mathcal{C}^{m+n-4} = \bigwedge^{m+n-2}(\mathbf{V})$.

This defines the bracket of two homogeneous elements of $\bigwedge \mathbf{V}$:

$$\{\hat{A}_m , \hat{B}_n\}_S = \tfrac{1}{2}[\mathbf{A},\mathbf{B}] / \mathcal{C}^{m+n-4} .$$

This bracket is bilinearly extended to $\bigwedge \mathbf{V}$ and yields a map :

$$\bigwedge \mathbf{V} \times \bigwedge \mathbf{V} \to \bigwedge \mathbf{V} : (\hat{A}, \hat{B}) \to \{\hat{A},\hat{B}\}_S ,$$

obeying the axioms of a super-Poison algebra, given below.

[13] Elements of this quotient $\mathcal{C}^m / \mathcal{C}^{m-2}$ are denoted by $\hat{A}_m$, $\hat{B}_m$, $\cdots$.

For homogeneous elements $\hat{A}_m \in \bigwedge^m(\mathbf{V})$ and $\hat{B}_n \in \bigwedge^n(\mathbf{V})$, one has :

a) $\{\hat{A}_m, \hat{B}_n\}_S = -(-1)^{mn}\{\hat{B}_n, \hat{A}_m\}_S$, the super-antisymmetry .

b) $\{\hat{A}_m, \hat{B}_n \wedge \hat{C}_k\}_S = \{\hat{A}_m, \hat{B}_n\}_S \wedge \hat{C}_k + (-1)^{mn}\hat{B}_n \wedge \{\hat{A}_m, \hat{C}_k\}_S$,

$\{\hat{A}_m, \ \}_S$ is a derivation of grade $(m-2)$ on the Z-graded algebra $\bigwedge \mathbf{V}$.

c) $\{\hat{A}_m, \{\hat{B}_n, \hat{C}_k\}_S\}_S = \{\{\hat{A}_m, \hat{B}_n\}_S, \hat{C}_k\}_S + (-1)^{mn}\{\hat{B}_n, \{\hat{A}_m, \hat{C}_k\}_S\}_S$,

the super-Jacobi identity .

Some rather easy calculations yield the following results, to be used below :

$\{1, \hat{B}_n\}_S = 0$.

$\{\mathbf{a}, \hat{B}_n\}_S = \iota(\eta^\flat(\mathbf{a}))\hat{B}_m$,

where $\eta^\flat : V \to V^*$ is defined by : $(\eta^\flat(\mathbf{a}),\mathbf{b}) = \eta(\mathbf{a},\mathbf{b})$.

$\{\mathbf{a} \wedge \mathbf{b}, \hat{C}_k\}_S = (-1)^k\Big(\iota(\eta^\flat(\mathbf{a}))\hat{C}_k\Big) \wedge \mathbf{b} + \mathbf{a} \wedge \Big(\iota(\eta^\flat(\mathbf{b}))\hat{C}_k\Big)$.

$\{\mathbf{a} \wedge \mathbf{b} \wedge \mathbf{c}, \hat{D}_\ell\}_S =$

$\Big(\iota(\eta^\flat(\mathbf{a}))\hat{D}_\ell\Big) \wedge \mathbf{b} \wedge \mathbf{c} + (-1)^\ell \mathbf{a} \wedge \Big(\iota(\eta^\flat(\mathbf{b})\hat{D}_\ell\Big) \wedge \mathbf{c} + \mathbf{a} \wedge \mathbf{b} \wedge \Big(\iota(\eta^\flat(\mathbf{c}))\hat{D}_\ell\Big)$.

4.b) Let us now consider a Lie algebra $\mathcal{A}$ with an <u>invariant</u> , <u>non-degenerate</u> scalar product η . In particular $\mathcal{A}$ is a vector space as above and the non-degeneracy means that $\eta^\flat$ is an isomorphism with inverse $(\eta^\flat)^{-1} = \eta^\sharp$.

Its Lie algebra structure is determined in a basis $(\mathbf{e}_i)$ by the brackets :

$$[\mathbf{e}_i , \mathbf{e}_j] = \mathbf{e}_k \, f^k{}_{ij} .$$

The invariance of the scalar product is with respect to the adjoint action of $\mathcal{A}$ on itself :

$$\eta(\mathbf{ad}(\mathbf{a})\mathbf{b}, \mathbf{c}) + \eta(\mathbf{b}, \mathbf{ad}(\mathbf{a})\mathbf{c}) = 0 .$$

In terms of the structure constants defined above,this reads :

$$f^\ell{}_{ij}\, \eta_{\ell k} + \eta_{j\ell}\, f^\ell{}_{ik} = 0 .$$

There is a distinguished 3-form on the vector space $\mathcal{A}$, defined by :

$$\omega(\mathbf{a},\mathbf{b},\mathbf{c}) = -\eta([\mathbf{a},\mathbf{b}],\mathbf{c}) ,$$

In terms of the basis (ϵ^i) of $\mathcal{A}^*$, dual to $(\mathbf{e}_i)$, one has :

$$\omega = -\tfrac{1}{3!} f^\ell{}_{ij}\, \eta_{\ell k}\, \epsilon^i \wedge \epsilon^j \wedge \epsilon^k .$$

The isomorphism $\eta^\sharp$ extends naturally to an isomorphism $\bigwedge \mathcal{A}^* \to \bigwedge \mathcal{A}$, so there is also a distinguished element of $\bigwedge^3 \mathcal{A}$ namely $\Omega_0 = \eta^\sharp(\omega)$.

The reciprocal basis $(\mathbf{u}^i)$ to $(\mathbf{e}_j)$ is defined by :

$$\eta(\mathbf{u}^i, \mathbf{e}_j) = \delta^i{}_j \text{ , or } \mathbf{u}^i = (\eta^\natural)^{ij}\, \mathbf{e}_j \text{ and } \mathbf{e}_j = \eta_{ji}\, \mathbf{u}^i \text{ .}$$

Using the vectors of this reciprocal basis, Ω_0 reads :

$$\Omega_0 = -\tfrac{1}{3!}\, f^k{}_{ij}\, \mathbf{u}^i \wedge \mathbf{u}^j \wedge \mathbf{e}_k \text{ .}$$

The exterior algebra $(\bigwedge \mathcal{A}, +, \wedge)$ is a vector space with an invariant scalar product, so it has a super-Poisson structure as defined in **4.a)** .

The Poisson bracket of Ω_0 with the basis vectors are obtained as :

$$\{\Omega_0, \mathbf{e}_\ell\}_S = -\tfrac{1}{2!}\, f^k{}_{ij}\, \eta_{k\ell}\, \mathbf{u}^i \wedge \mathbf{u}^j = \tfrac{1}{2!}\, f^k{}_{i\ell}\, \mathbf{u}^i \wedge \mathbf{e}_k \text{ ,}$$

$$\{\Omega_0, \mathbf{u}^k\}_S = \tfrac{1}{2!}\, f^k{}_{ij}\, \mathbf{u}^i \wedge \mathbf{u}^j \text{ .}$$

The dual $\mathcal{A}^*$ of the Lie algebra $\mathcal{A}$ can be identified with the left-invariant one-forms on the corresponding Lie group , on which the exterior differential induces a map[14]:

$$\mathbf{d} : \mathcal{A}^* \to \textstyle\bigwedge^2(\mathcal{A}^*) : \epsilon^i \to \mathbf{d}\epsilon^i = -1/2\, f^i{}_{jk}\, \epsilon^j \wedge \epsilon^k \text{ .}$$

The isomorphism $\eta^\natural$ induces then the linear map :

$$\mathbf{d}^\natural : \mathcal{A} \to \textstyle\bigwedge^2(\mathcal{A}) : \mathbf{e}_i \to \mathbf{d}^\natural \mathbf{e}_i = -1/2\, f^j{}_{k\ell}\, \eta_{ij}\, \mathbf{u}^k \wedge \mathbf{u}^\ell \text{ .}$$

Let $\mathbf{d}^\natural$ also denote the derivation of grade $+1$ on $\bigwedge \mathcal{A}$ such that $\mathbf{d}^\natural 1 = 0$ and $\mathbf{d}^\natural \mathbf{e}_i$ as above , then it coincides with the Poisson bracket $\{\Omega_0, \ \}_S$ on all $\bigwedge \mathcal{A}$, since both are graded derivations :

$$\mathbf{d}^\natural \hat{A} = \{\Omega_0, \hat{A}\}_S \text{ , } \forall \hat{A} \in \mathcal{A} \text{ .}$$

4.c) Choose now for $\mathcal{A}$ the semi-direct sum of $\mathcal{G}^*$ and $\mathcal{G}$, where $\mathcal{G}^*$ is considered as a trivial Lie algebra and where $\mathcal{G}$ acts on $\mathcal{G}^*$ by the co-adjoint representation :

$$\mathbf{k} : \mathcal{G} \to \mathcal{E}nd(\mathcal{G}^*) : \vec{u} \to \mathbf{k}(\vec{u}) \text{ , with } \langle \mathbf{k}(\vec{u})\xi \,|\, \vec{v}\rangle = -\langle \xi \,|\, \mathbf{ad}(\vec{u})\vec{v}\rangle = -\langle \xi \,|\, [\vec{u}, \vec{v}]\rangle \text{ .}$$

A pair of dual bases $(\vec{e}_\alpha \,,\, \alpha = 1, 2, \cdots, \mathrm{N})$ of $\mathcal{G}$ and $(\epsilon^\beta \,,\, \beta = 1, 2, \cdots, \mathrm{N})$ of $\mathcal{G}^*$, yields a basis : $(\mathbf{e}_i \,,\, i = 1, 2, \cdots, 2\mathrm{N}) \equiv (\vec{e}_\alpha \,,\, \epsilon^\beta)$, and the fundamental brackets of $\mathcal{A}$ are :

$$[\epsilon^\alpha, \epsilon^\beta] = 0 \text{ , } [\epsilon^\alpha, \vec{e}_\nu] = -\,\epsilon^\lambda\, f^\alpha_{\lambda\nu} \text{ , } [\vec{e}_\mu, \epsilon^\beta] = +\,\epsilon^\lambda\, f^\beta_{\lambda\mu} \text{ , } [\vec{e}_\mu, \vec{e}_\nu] = +\,\vec{e}_\kappa\, f^\kappa_{\mu\nu} \text{ .}$$

The invariant scalar product $\eta : \mathcal{A} \otimes \mathcal{A} \to R$ is defined so as to vanish on the diagonal terms, $\mathcal{G}^* \otimes \mathcal{G}^*$ and $\mathcal{G} \otimes \mathcal{G}$, and as the evaluation map on the off-diagonal terms, $\mathcal{G}^* \otimes \mathcal{G}$ and $\mathcal{G} \otimes \mathcal{G}^*$:

$$\eta(\epsilon^\alpha, \epsilon^\beta) = 0 \text{ , } \eta(\epsilon^\alpha, \vec{e}_\nu) = \delta^\alpha_\nu \text{ , } \eta(\vec{e}_\mu, \epsilon^\beta) = \delta^\beta_\mu \text{ , } \eta(\vec{e}_\mu, \vec{e}_\nu) = 0 \text{ .}$$

[14] In purely algebraic terms this map is *minus* the dual of the Lie bracket [,] seen as a map $\bigwedge^2(\mathcal{A}) \to \mathcal{A}$.

It is obviously invariant under the adjoint action of $\mathcal{A}$ on itself.

The super-Poisson structure on $\bigwedge \mathcal{A}$ is defined by the fundamental brackets :

$$\{\epsilon^\alpha, \epsilon^\beta\}_S = 0 \quad , \quad \{\epsilon^\alpha, \vec{e}_\nu\}_S = \delta^\alpha_\nu \text{ ,}$$

$$\{\vec{e}_\mu, \epsilon^\beta\}_S = \delta^\beta_\mu \quad , \quad \{\vec{e}_\mu, \vec{e}_\nu\}_S = 0 \text{ .}$$

The reciprocal basis of $(\epsilon^\alpha \,,\, \vec{e}_\beta)$ is $(\vec{e}_\mu \,,\, \epsilon^\nu)$ and the distinguished element of $\wedge^3(\mathcal{G}^* \oplus \mathcal{G})$ is computed as :

$$\Omega_0 = -\,1/2\, f^\alpha{}_{\mu\nu}\, \epsilon^\mu \wedge \epsilon^\nu \wedge \vec{e}_\alpha \quad .$$

The Poisson brackets of the basis vectors with Ω_0 , which are also given by the action of the derivation $\mathbf{d}^\natural$, are :

$$\mathbf{d}^\natural \vec{e}_\mu = \{\Omega_0 \,,\, \vec{e}_\mu\}_S = -\, f^\alpha{}_{\mu\nu}\, \epsilon^\nu \wedge \vec{e}_\alpha$$

$$\mathbf{d}^\natural \epsilon^\alpha = \{\Omega_0 \,,\, \epsilon^\alpha\}_S = -1/2\, f^\alpha{}_{\mu\nu}\, \epsilon^\mu \wedge \epsilon^\nu$$

Since $\bigwedge(\mathcal{G}^* \oplus \mathcal{G}) \equiv \bigoplus_{\ell,k} \bigwedge^\ell(\mathcal{G}^*) \wedge \bigwedge^k(\mathcal{G})$, the action of Ω_0 is determined by its action on elements of the form :

$$\Theta_\ell \wedge U_k \quad \in \quad \textstyle\bigwedge^\ell(\mathcal{G}^*) \wedge \bigwedge^k(\mathcal{G}) :$$

$$\{\Omega_0, (\Theta_\ell \wedge U_k)\}_S = \mathbf{d}^\natural(\Theta_\ell \wedge U_k) = (\mathbf{d}^\natural \Theta_\ell) \wedge U_k + (-1)^\ell\, \Theta_\ell \wedge (\mathbf{d}^\natural U_k) \text{ .}$$

On Θ_ℓ, $\mathbf{d}^\natural$ operates as the derivation of grade $+1$ on $\bigwedge \mathcal{G}^*$, determined as above.

It coincides with the operator δ_o introduced in **3.b)**.

On $U_k \in \wedge^k \mathcal{G}$ it acts as :

$$\mathbf{d}^\natural U_k = \epsilon^\mu \wedge \mathbf{ad}(\vec{e}_\mu) U_k \text{ .}$$

Summarizing :

$$\mathbf{d}^\natural(\Theta_\ell \wedge U_k) = \{\Omega_0 \,,\, \Theta_\ell \wedge U_k\}_S = (\delta_o \Theta_\ell) \wedge U_k + (\epsilon^\mu \wedge \Theta_\ell) \wedge \mathbf{ad}(\vec{e}_\mu) U_k \text{ .}$$

On this particular Lie algebra $\mathcal{A} \equiv \mathcal{G}^* \oplus \mathcal{G}^*$, there is another distinguished element of $\bigwedge \mathcal{A}$, independent of the choosen pair of dual bases $\{\epsilon^\mu, \vec{e}_\nu\}$, namely :

$$\Phi_0 = \epsilon^\alpha \wedge \vec{e}_\alpha \quad \in \quad \mathcal{G}^* \wedge \mathcal{G},$$

whose action on $\Theta_\ell \wedge U_k$ is calculated as :

$$\{\Phi_0, \Theta_\ell \wedge U_k\}_S = (\ell - k)\, \Theta_\ell \wedge U_k \text{ .}$$

4.d) The super-Poisson algebra $\left(\bigwedge(\mathcal{G}^* \oplus \mathcal{G}), +, \wedge, \{\ ,\ \}_S\right)$ is now tensored with the (ordinary) Poisson algebra $\left(\mathcal{F}(M), +, \cdot, \{\ ,\ \}\right)$ yielding a super-Poisson algebra :

$$\mathcal{P} = \left(\bigwedge(\mathcal{G}^* \oplus \mathcal{G})\right) \otimes \mathcal{F}(M),$$

with associative multiplication, $\times$, defined by :

$$(\hat{A} \otimes f) \times (\hat{B} \otimes g) = (\hat{A} \wedge \hat{B}) \otimes (f \cdot g),$$

and Poisson superbracket, given by :

$$\left\{(\hat{A} \otimes f), (\hat{B} \otimes g)\right\}_\Sigma = \{\hat{A}, \hat{B}\}_S \otimes (f \cdot g) + (\hat{A} \wedge \hat{B}) \otimes \{f, g\}.$$

The BRST charge in $\mathcal{P}$ is :

$$\begin{aligned}\Omega &= \Omega_0 \otimes 1 + \epsilon^\alpha \otimes \Psi_\alpha \\ &= -1/2\, f^\gamma{}_{\alpha\beta}\, \epsilon^\alpha \wedge \epsilon^\beta \wedge \vec{e}_\gamma \otimes 1 + \epsilon^\mu \otimes \Psi_\mu .\end{aligned}$$

It acts on $\Gamma = (\Theta_\ell \wedge U_k) \otimes f$ as :

$$\begin{aligned}\left\{\Omega, \Gamma\right\}_\Sigma &= ((\delta_o \Theta_\ell) \wedge U_k) \otimes f + ((\epsilon^\mu \wedge \Theta_\ell) \wedge \mathrm{ad}(\vec{e}_\mu) U_k) \otimes f \\ &\quad + (-1)^\ell (\Theta_\ell \wedge \imath(\epsilon^\mu) U_k) \otimes (\Psi_\mu \cdot f) + ((\epsilon^\mu \wedge \Theta_\ell) \wedge U_k) \otimes \{\Psi_\mu, f\}\end{aligned}$$

Upon identification of the exterior algebra $\bigwedge(\mathcal{G}^* \oplus \mathcal{G}) = \bigoplus_{\ell,k} \bigwedge^\ell(\mathcal{G}^*) \wedge \bigwedge^k(\mathcal{G})$ with $\bigwedge \mathcal{G}^* \otimes \bigwedge \mathcal{G} = \bigoplus_{\ell,k} \bigwedge^\ell(\mathcal{G}^*) \otimes \bigwedge^k(\mathcal{G})$, through the correspondence $\Theta_\ell \otimes U_k \Leftrightarrow \Theta_\ell \wedge U_k$, the complex L is identified with $\mathcal{P}$.

Furthermore, the Poisson bracket in $\mathcal{P}$ with Ω, corresponds to the action of Δ in L.

$$\Delta(\Theta_\ell \otimes U_k \otimes f) \quad \Leftrightarrow \quad \left\{\Omega, (\Theta_\ell \wedge U_k) \otimes f\right\}_\Sigma .$$

A generic element of $\mathcal{P}$ is a sum of terms of the form :

$$\Gamma = \frac{1}{k!\,\ell!}\, g_{\mu_1 \cdots \mu_\ell}{}^{\nu_1 \cdots \nu_k}(x)\ \epsilon^{\mu_1 \cdots \mu_\ell} \wedge \vec{e}_{\nu_1 \cdots \nu_k},$$

where

$$\epsilon^{\mu_1 \cdots \mu_\ell} = \epsilon^{\mu_1} \wedge \cdots \wedge \epsilon^{\mu_\ell} \quad \text{and} \quad \vec{e}_{\nu_1 \cdots \nu_k} = \vec{e}_{\nu_1} \wedge \cdots \wedge \vec{e}_{\nu_k} .$$

The Poisson bracket of Ω with such a Γ is given by :

$$\begin{aligned}\left\{\Omega, \Gamma\right\}_\Sigma &= \frac{1}{k!\,(\ell+1)!}\ A_{\alpha_1 \cdots \alpha_{\ell+1}}{}^{\beta_1 \cdots \beta_k}(x)\ \epsilon^{\alpha_1 \cdots \alpha_{\ell+1}} \wedge \vec{e}_{\beta_1 \cdots \beta_k} \\ &\quad + \frac{1}{(k-1)!\,\ell!}\ B_{\alpha_1 \cdots \alpha_\ell}{}^{\beta_1 \cdots \beta_{k-1}}(x)\ \epsilon^{\alpha_1 \cdots \alpha_\ell} \wedge \vec{e}_{\beta_1 \cdots \beta_{k-1}}\end{aligned}$$

where

$$\begin{aligned}A_{\alpha_1 \cdots \alpha_{\ell+1}}{}^{\beta_1 \cdots \beta_k}(x) &= -\frac{1}{2(\ell-1)!}\ f^\rho{}_{\mu_1\mu_2}\ \ g_{\rho\mu_3 \cdots \mu_{\ell+1}}{}^{\beta_1 \cdots \beta_k}(x)\ \ \delta^{\mu_1 \cdots \mu_{\ell+1}}_{\alpha_1 \cdots \alpha_{\ell+1}} \\ &\quad + \frac{1}{\ell!\,(k-1)!}\ f^{\nu_1}{}_{\mu_1\sigma}\ \ g_{\mu_2 \cdots \mu_{\ell+1}}{}^{\sigma\nu_2 \cdots \nu_k}(x)\ \ \delta^{\mu_1 \cdots \mu_{\ell+1}}_{\alpha_1 \cdots \alpha_{\ell+1}}\ \ \delta^{\beta_1 \cdots \beta_k}_{\nu_1 \cdots \nu_k} \\ &\quad + \frac{1}{\ell!}\ \{\Psi_{\mu_1}, g_{\mu_2 \cdots \mu_{\ell+1}}{}^{\beta_1 \cdots \beta_k}\}(x)\ \ \delta^{\mu_1 \cdots \mu_{\ell+1}}_{\alpha_1 \cdots \alpha_{\ell+1}} \\ B_{\alpha_1 \cdots \alpha_\ell}{}^{\beta_1 \cdots \beta_{k-1}}(x) &= (-1)^\ell\, \Psi_\sigma(x)\ \ g_{\alpha_1 \cdots \alpha_\ell}{}^{\sigma\beta_1 \cdots \beta_{k-1}}(x)\end{aligned}$$

Since $(\Delta)^2 = 0$, it is also expected that $\left\{\Omega, \left\{\Omega, *\right\}_\Sigma\right\}_\Sigma = 0$.

This is equivalent to $\left\{\Omega, \Omega\right\}_\Sigma = 0$, which can be verified from the expression above.

The ghost number operator is defined by :

$$\Phi = \Phi_0 \otimes 1 = (\epsilon^\mu \wedge \vec{e}_\mu) \otimes 1,$$

so that, on $\Gamma = ((\Theta_\ell \wedge U_k) \otimes f)$, it acts as :

$$\left\{\Phi, \Gamma\right\}_\Sigma = (\ell - k)\,\Gamma .$$

Γ is then said to have ghost number $(\ell - k)$.

In particular, the BRST charge has ghost number 1 :

$$\left\{\Phi, \Omega\right\}_\Sigma = \Omega,$$

and the ghost number operator itself has vanishing ghost number :

$$\left\{\Phi, \Phi\right\}_\Sigma = 0 .$$

The super-Poisson algebra $\mathcal{P}$ is Z-graded in the ghost number :

$$\mathcal{P} = \bigoplus_{h \in Z} \mathcal{P}^h ,$$

where $\mathcal{P}^h$ is the eigenspace of the ghost number operator.

The associative multiplication $\times$ and the superbracket $\left\{*,*\right\}_\Sigma$ are both additive in the ghost number i.e. the images of $\mathcal{P}^{h_1} \times \mathcal{P}^{h_2}$ both ly in $\mathcal{P}^{h_1+h_2}$.

The BRST charge Ω provides a coboundary operator :

$$\left\{\Omega,*\right\}_\Sigma : \mathcal{P}^h \to \mathcal{P}^{h+1} ,$$

giving $\mathcal{P}$ the structure of a complex, with h-cocycles :

$$Z^h(\mathcal{P}) = \left\{\Gamma \in \mathcal{P}^h \mid \left\{\Omega,\Gamma\right\}_\Sigma = 0\right\},$$

and h-coboundaries :

$$B^h(\mathcal{P}) = \left\{\mathrm{B} \in \mathcal{P}^h \mid \mathrm{B} = \left\{\Omega,\Gamma'\right\}_\Sigma \Gamma' \in \mathcal{P}^{h-1}\right\}.$$

The h-cohomology is the quotient :

$$H^h(\mathcal{P}) = Z^h(\mathcal{P}) / B^h(\mathcal{P}).$$

Since $\{\Psi_\alpha\}$ is a regular sequence, the cohomology with negative ghost number is trivial :

$$H^h(\mathcal{P}) = 0 \quad \text{for} \quad h < 0 .$$

The 0-cocycles form a Poisson subalgebra of $\mathcal{P}^0$:

$$\Gamma \text{ and } \Gamma' \in Z^0 \quad \text{implies} \quad \Gamma \times \Gamma' \quad \text{and} \quad \left\{\Gamma,\Gamma'\right\}_\Sigma \in Z^0 .$$

In turn the 0-coboundaries form a Poisson ideal in $Z^0(\mathcal{P})$:

$$\mathrm{B} \in B^0(\mathcal{P}) \text{ i.e. } \mathrm{B} = \left\{\Omega,\Gamma_{-1}\right\}_\Sigma , \text{ with } \Gamma_{-1} \in \mathcal{P}^{-1} \quad \text{and} \quad \Gamma_0 \in Z^0 \quad \text{imply}$$

$$\mathrm{B} \times \Gamma_0 = \left\{\Omega,\Gamma_{-1} \times \Gamma_0\right\}_\Sigma \quad \text{and} \quad \left\{\mathrm{B},\Gamma_0\right\}_\Sigma = \left\{\Omega,\left\{\Gamma_{-1},\Gamma_0\right\}_\Sigma\right\}_\Sigma$$

so that both belong to $B^0(\mathcal{P})$.

This guarantees that the quotient of the Poisson algebra $Z^0(\mathcal{P})$ by its ideal $B^0\mathcal{P})$, i.e. the cohomology $H^0(\mathcal{P})$, has the structure of a Poisson algebra .:

This Poisson algebra is isomorphic to the Poisson algebra of functions on the reduced symplectic manifold $\mathcal{R}$:

$$\mathcal{F}(\mathcal{R}) = H^0(\mathcal{P}).$$

5. The extended supersymplectic phase space

The elements of the super-Poisson algebra $\mathcal{P} = \bigwedge(\mathcal{G}^* \oplus \mathcal{G}) \otimes \mathcal{F}(M)$ are identified with the sections of the exterior bundle $\bigwedge E \to M$ associated to the (trivial) vector bundle

$$E = (\mathcal{G}^* \oplus \mathcal{G}) \times M \to M.$$

A sheaf, denoted also by $\mathcal{P}$, of graded commutative algebras is defined over M by the association to each open set U in M of the exterior algebra of local sections :

$$\mathcal{P} : U \to \mathcal{P}(U) = \bigoplus_k \Gamma(U, \bigwedge^k E) ,$$

with the obvious restriction maps.

A surjective map of sheaves from $\mathcal{P}$ to the sheaf $\mathcal{F}$ of smooth functions on M is given by the projection of each $\mathcal{P}(U)$ onto its component in $\Sigma(U, \bigwedge^0 E) \simeq \mathcal{F}(U)$.

Furthermore, a pair of dual bases $(\epsilon_\alpha , \mathbf{e}_\beta)$ in $\mathcal{G}^* \oplus \mathcal{G}$ provides a sheaf isomomorphism :

$$\phi_{|U} : \mathcal{P}_{|U} \to (\bigwedge R^{2N} \otimes \mathcal{F})_{|U}.$$

The pair $\mathcal{G}M = (M , \mathcal{P})$ of the manifold M and the corresponding sheaf $\mathcal{P}$ as above, is called a Berezin-Kostant graded manifold (see e.g. [Be-L 75],[K 77],[Le 80]).

Although the graded manifolds defined in this way, arise naturally from the considerations of the preceding paragraphs, the supermanifold approach [15] sketched below, is more familiar to physicists' methods.

The basic ingredient is a Z_2 graded, unital, commutative algebra over the reals R :

$\mathcal{A} = \mathcal{A}_0 \oplus \mathcal{A}_1$, whose elements are called supernumbers.

A <u>pure</u> supernumber is either <u>even</u> $(u, v, \cdots \in \mathcal{A}_0)$ or <u>odd</u> $(\theta, \tau, \cdots \in \mathcal{A}_1)$. Furthermore there is an algebra homomorphism $\beta : \mathcal{A} \to R$, whose image is called the "body" of the supernumber. The "soul" of the supernumber is what is left over after subtracting the "body".

Locally, the points of the supermanifold, $\mathcal{S}M$, are given by m even coordinates and by $2N$ odd coordinates : $(p^A) = (u^1, \cdots u^m, \theta^1, \cdots, \theta^N, \tau_1, \cdots, \tau_N)$.

The set $(x^i = \beta(u^i))$ forms a usual coordinate system for the underlying "body" manifold of $\mathcal{S}M$ which is an ordinary manifold M.

[15] A comprehensive introduction is given in de Witt's book [dW 84]. The relation between various axiomatisation schemes, up to 1984, is discussed by Batchelor [Bat 84]. Recent results were obtained by Rothstein [R 86] and by the Genova group [BarBH 88] and [BarBHP 92].

As for any real manifold M of dimension m, defined by patching together open sets of R^m, a supermanifold $\mathcal{S}M$ of dimension (m,n) is defined by doing patchwork with open sets of $(\mathcal{A}_0)^m \times (\mathcal{A}_1)^n$. The various approaches refered to in footnote 14 correspond to the various topological and differential possibilities for doing this patchwork.

In the case of a Poisson group action, considered here, the supermanifold of interest can be written as : $\mathcal{S}M \simeq M_{even} \times (\mathcal{G}^* \oplus \mathcal{G})^*_{odd}$, where M_{even} is the $\mathcal{A}_0$-extension of the manifold M and where $(\mathcal{G} \oplus \mathcal{G}^*)_{odd}$ is the odd part of the supervector space $(\mathcal{G} \oplus \mathcal{G}^*)$ of dimension $(2N,0)$ with pure even basis $(\mathbf{e}_\alpha , \epsilon_\beta)$.

The elements of $\mathcal{P}$ are now identified with $\mathcal{F}(\mathcal{S}M)$, the (smooth) $\mathcal{A}$-valued functions on $\mathcal{S}M$. Let $\Gamma \in \mathcal{P}$ be given by its value at a point $x \in M$:

$$\Gamma(x) = \sum_{l,k=0}^{N} \frac{1}{l!\,k!} g_{\alpha_1 \cdots \alpha_l}{}^{\beta_1 \cdots \beta_k}(x)\, \epsilon^{\alpha_1} \wedge \cdots \wedge \epsilon^{\alpha_l} \wedge \mathbf{e}_{\beta_1} \wedge \cdots \wedge \mathbf{e}_{\beta_k} .$$

The corresponding element of $\mathcal{F}(\mathcal{S}M)$, abusing notation, is given by :

$$\Gamma(u,\theta,\tau) = \sum_{l,k=0}^{N} \frac{1}{l!\,k!} g_{\alpha_1 \cdots \alpha_l}{}^{\beta_1 \cdots \beta_k}(u)\, \theta^{\alpha_1} \cdots \theta^{\alpha_l}\, \tau_{\beta_1} \cdots \tau_{\beta_k} .$$

The function $g(u)$ is the $\mathcal{A}_0$-extension of $g(x)$ defined on M_{even} with values in $\mathcal{A}_0$. It is given by a Taylor expansion in powers of the "soul"of u i.e. $(u - x)$ with $x = \beta(u)$:

$$g(u) = \sum_{(r),|r|=0}^{\infty} \frac{1}{(r)!} \frac{\partial^{|r|} g(x)}{\partial x^{(r)}} (u - x)^{(r)} ,$$

where a muti-index notation has been used :

$(r) = (r_1 , \cdots , r_m)$, $|r| = r_1 + \cdots + r_m$, $(r)! = r_1! \cdots r_m!$ and

$(u - x)^{(r)} = (u^1 - x^1)^{r_1} \cdots (u^m - x^m)^{r_m}$.

In general, a superfunction $f \in \mathcal{F}(\mathcal{S}\mathcal{M})$ is called <u>pure</u> if for all $p \in \mathcal{S}\mathcal{M}$, $f(p)$ is a pure supernumber, in which case one denotes the grade of f by $| f | \in Z_2$.

Supervectorfields on a supermanifold $\mathcal{S}\mathcal{M}$ are defined as linear operators on $\mathcal{F}(\mathcal{S}\mathcal{M})$:

$$\mathbf{X}(f + g) = \mathbf{X}(f) + \mathbf{X}(g) \quad \text{and} \quad \mathbf{X}(f . a) = \mathbf{X}(f) . a ,$$

for f and $g \in \mathcal{F}(\mathcal{S}\mathcal{M})$, $a \in \mathcal{A}$,

obeying Leibniz rule :

$$\mathbf{X}(f . g) = \mathbf{X}(f) . g + (-1)^{|f|\,|g|} \mathbf{X}(g) . f \quad ,$$

for pure functions f and g.

A supervectorfield is pure of grade $| \mathbf{X} |$ when

$$| \mathbf{X}(f) | = | \mathbf{X} | \, | f | \ .$$

For pure vector fields and pure functions, the Leibniz rule reads :

$$\mathbf{X}(f . g) = \mathbf{X}(f) . g + (-1)^{|f|\,|\mathbf{X}|} f . \mathbf{X}(g) ,$$

In local coordinates :

$$\mathbf{X}(f) = X^A(p) \frac{\partial}{\partial p^A} f(p)$$

and

$$\mathbf{E}_A(p) = \frac{\partial}{\partial p^A}_{|L}$$

acting <u>on</u> the left (<u>to</u> the right), are natural basis vectors of the tangent space at $p \in \mathcal{S}\mathcal{M}$.

The supercommutator of two supervectorfields is defined by :

$$[\mathbf{X} , \mathbf{Y}](f) = \mathbf{X}(\mathbf{Y}(f)) - (-1)^{|\mathbf{X}|\,|\mathbf{Y}|} \mathbf{Y}(\mathbf{X}(f)) .$$

A supervectorfield acts on the right on superfunctions as :

$$(f)\mathbf{X} = (-1)^{|f|\,|\mathbf{X}|} \mathbf{X}(f)$$

and in local coordinates :

$$(f)\mathbf{X} = \frac{f(p)\partial}{\partial p^A} {}^A X(p) ,$$

with

$${}^A X(p) = (-1)^{|\mathbf{X}|\,|A|} X^A .$$

The natural basis vectors acting <u>on</u> the right are :

$${}_A\mathbf{E}(p) = \frac{\partial}{\partial p^A}_{|R} ,$$

they are related to the natural left acting basis by :

$${}_A\mathbf{E}(p) = (-1)^{|A|} \mathbf{E}_A .$$

Covariant supervectorfields or super one-forms are linear maps :

$$\Theta : \mathcal{S}\mathcal{V}ect(\mathcal{S}\mathcal{M}) \to \mathcal{F}(\mathcal{S}\mathcal{M}) .$$

In local coordinates, they are given by :

$$\Big(\Theta\,,\,\mathbf{X}\Big)(p) = \Theta_A(p)\,{}^A X(p)$$

or

$$\Big(\mathbf{X}\,,\,\Theta\Big)(p) = X^A(p)\,{}_A\Theta(p)\,,$$

with

$$\Theta(p) = \mathbf{E}^A(p)\,{}_A\Theta(p) = \Theta_A\,{}^A\mathbf{E}(p)\,,$$

where

$$\mathbf{E}^A(p) = {}^A\mathbf{E}(p) = \mathbf{d}p^A$$

are the diferentials of the coordinate functions.

For pure super one-forms :

$$\Big(\Theta\,,\,\mathbf{X}\Big) = (-1)^{|\mathbf{X}|\,|\Theta|}\,\Big(\mathbf{X}\,,\,\Theta\Big)(p)\,.$$

Modulo appropriate signs, the supertensor algebra is constructed as usual and we refer to de Witt's book ([dW 87]) for details.

The exterior product of k (pure) one-forms is defined by :

$$\Theta_1 \wedge \cdots \wedge \Theta_k = \sum_{\mathrm{P}\in \mathrm{S}_k} (-1)^{\sigma(\mathrm{P})}(-1)^{\sigma(\mathrm{P}')}\,\Theta_{\mathrm{P}(1)} \otimes \cdots \otimes \Theta_{\mathrm{P}(k)}\,,$$

where the sum goes over S_k, the permutation group of k elements, and where the parity of the permutation P is $\sigma(\mathrm{P})$ and $\sigma(\mathrm{P}')$ that of P',the restriction of P to the odd one-forms.

A k-form is given locally by its components :

$$\Gamma = \frac{1}{k!}(-1)^{\Delta_k(I)}\,\Gamma_{i_1\cdots i_k}\,{}^{i_1}\mathbf{E} \wedge \cdots \wedge {}^{i_k}\mathbf{E}\,,$$

where

$$\Delta_k(I) = \textstyle\sum_{r<s} |\,i_r\,|\,|\,i_s\,|\,.$$

A k-form is pure if its value $\Gamma(\mathbf{X}_1,\cdots,\mathbf{X}_k)$ for pure supervectorfields $\mathbf{X}_1,\cdots\mathbf{X}_k$ is a pure superfunction.

For pure k-forms :

$$|\,\Gamma(\mathbf{X}_1,\cdots,\mathbf{X}_k)\,| - |\,\mathbf{X}_1\,| - \cdots - |\,\mathbf{X}_k\,| = |\,\Gamma\,|\,.$$

Let $\bigwedge^k(\mathcal{SM})$ denote the set of k-forms.

The exterior product of superforms gives

$$\bigwedge(\mathcal{SM}) = \sum_k \bigwedge^k(\mathcal{SM})$$

the structure of a $Z_2 \times Z$, bi-graded algebra.

The bi-grade of $\Gamma \in \bigwedge^k(\mathcal{SM})$ is then $(|\,\Gamma\,|,k)$.

A (pure) (super)derivation $\mathbf{D}$ of bigrade $(|\,\mathbf{D}\,|,g)$ on $\bigwedge(\mathcal{SM})$ is a local linear map :

$$\mathbf{D} : \bigwedge^k(\mathcal{SM}) \to \bigwedge^{k+g}(\mathcal{SM})$$

such that

$$\mathbf{D}(\Theta_1 + \Theta_2) = \mathbf{D}(\Theta_1) + \mathbf{D}(\Theta_2)\,,$$

$$\mathbf{D}(\Theta\,.\,a) = \mathbf{D}(\Theta)\,.\,a\,,$$

and obeying a super Leibniz rule :

$$\mathbf{D}(\Theta_1 \wedge \Theta_2) = (\mathbf{D}(\Theta_1)) \wedge \Theta_2 + (-1)^{|\mathbf{D}|\,|\Theta_1| + k_1 g}\,\Theta_1 \wedge \mathbf{D}(\Theta_2)\,.$$

The commutator of two derivations

$$[\mathbf{D}_1\,,\,\mathbf{D}_2] = \mathbf{D}_1\,\mathbf{D}_2 - (-1)^{|\mathbf{D}_1|\,|\mathbf{D}_2| + g_1 g_2}\,\mathbf{D}_2\,\mathbf{D}_1$$

is a derivation of bi-grade $(|\,\mathbf{D}_1\,| + |\,\mathbf{D}_2\,|,\,g_1 + g_2)$, obeying :

$$[\mathbf{D}_1\,,\,\mathbf{D}_2] = -(-1)^{|\mathbf{D}_1|\,|\mathbf{D}_2| + g_1 g_2}\,[\mathbf{D}_2\,,\,\mathbf{D}_1]\,,$$

$$[\mathbf{D}_1\,,\,[\mathbf{D}_2\,,\,\mathbf{D}_3]] = [[\mathbf{D}_1\,,\,\mathbf{D}_2]\,,\,\mathbf{D}_3] + (-1)^{|\mathbf{D}_1|\,|\mathbf{D}_2| + g_1 g_2}\,[\mathbf{D}_2\,,\,[\mathbf{D}_1\,,\,\mathbf{D}_3]]\,.$$

A derivation is defined by its action on $\bigwedge^0\mathcal{SM} = \mathcal{F}(\mathcal{SM})$ and on $\bigwedge^1\mathcal{SM}$.

The main derivations on $\bigwedge(\mathcal{SM})$ are :

1) The Lie derivative $\mathcal{L}_{\mathbf{X}}$ of bi-grade $(|\,\mathbf{X}\,|,0)$ defined by :

$$\mathcal{L}_{\mathbf{X}}(f) = \mathbf{X}(f)$$

$$(\mathcal{L}(\Theta),\,\mathbf{Y}) = \mathbf{X}((\Theta\,,\,\mathbf{Y})) - (-1)^{|\Theta|\,|\mathbf{Y}|}\,(\Theta\,,\,[\mathbf{X}\,,\,\mathbf{Y}])\,.$$

2)The exterior derivative of bi-grade $(0\,,\,+1)$ defined by :

$$\mathbf{d}f(p) = f(p)\partial/\partial p^A\;\mathbf{d}p^A\,,$$

$$\mathbf{d}(\mathbf{d}p^A)) = 0\,.$$

3)The interior product $\iota_{\mathbf{X}}$ of bi-grade $(|\,\mathbf{X}\,|,-1)$ defined by :

$$\iota_{\mathbf{X}}(f) = 0$$

$$\iota_{\mathbf{X}}(\Theta) = (\mathbf{X}\,,\,\Theta)\,.$$

Their commutators are easily calculated as :

$$
\begin{aligned}
[\imath_{\mathbf{X}}\,,\,\imath_{\mathbf{Y}}] &= \imath_{\mathbf{X}}\,\imath_{\mathbf{Y}} + (-1)^{|\mathbf{X}||\mathbf{Y}|}\,\imath_{\mathbf{Y}}\,\imath_{\mathbf{X}} = 0\,,\\
[\imath_{\mathbf{X}}\,,\,\mathcal{L}_{\mathbf{Y}}] &= \imath_{\mathbf{X}}\,\mathcal{L}_{\mathbf{Y}} - (-1)^{|\mathbf{X}||\mathbf{Y}|}\,\mathcal{L}_{\mathbf{Y}}\,\imath_{\mathbf{X}} = \imath_{[\mathbf{X},\mathbf{Y}]}\,,\\
[\imath_{\mathbf{X}}\,,\,\mathbf{d}] &= \imath_{\mathbf{X}}\,\mathbf{d} + \mathbf{d}\,\imath_{\mathbf{X}} = \mathcal{L}_{\mathbf{X}}\,,\\
[\mathcal{L}_{\mathbf{X}}\,,\,\imath_{\mathbf{Y}}] &= \mathcal{L}_{\mathbf{X}}\,\imath_{\mathbf{Y}} - (-1)^{|\mathbf{X}||\mathbf{Y}|}\,\imath_{\mathbf{Y}}\,\mathcal{L}_{\mathbf{X}} = \imath_{[\mathbf{X},\mathbf{Y}]}\,,\\
[\mathcal{L}_{\mathbf{X}}\,,\,\mathcal{L}_{\mathbf{Y}}] &= \mathcal{L}_{\mathbf{X}}\,\mathcal{L}_{\mathbf{Y}} - (-1)^{|\mathbf{X}||\mathbf{Y}|}\,\mathcal{L}_{\mathbf{Y}}\,\mathcal{L}_{\mathbf{X}} = \mathcal{L}_{[\mathbf{X},\mathbf{Y}]}\,,\\
[\mathcal{L}_{\mathbf{X}}\,,\,\mathbf{d}] &= \mathcal{L}_{\mathbf{X}}\,\mathbf{d} - \mathbf{d}\,\mathcal{L}_{\mathbf{X}} = 0\,,\\
[\mathbf{d}\,,\,\imath_{\mathbf{Y}}] &= \mathbf{d}\,\imath_{\mathbf{Y}} - (-1)^{|\mathbf{Y}|}\,\imath_{\mathbf{Y}}\,\mathbf{d} = \mathcal{L}_{\mathbf{Y}}\,,\\
[\mathbf{d}\,,\,\mathcal{L}_{\mathbf{Y}}] &= \mathbf{d}\,\mathcal{L}_{\mathbf{Y}} - \mathcal{L}_{\mathbf{Y}}\,\mathbf{d} = 0\,,\\
[\mathbf{d}\,,\,\mathbf{d}] &= \mathbf{d}\,\mathbf{d} + \mathbf{d}\,\mathbf{d} = 0\,.
\end{aligned}
$$

A supersymplectic structure on a supermanifold $\mathcal{S}M$ is defined by an even, nondegenerate and closed 2-form ω_Σ, locally given by (using de Witt's conventions) :

$$\omega_\Sigma = \frac{1}{2!}(-1)^{|A||B|}\,\omega_{AB}(p)\,\mathbf{d}p^A \wedge \mathbf{d}p^B\,,$$

where $|\,A\,|$ denotes the grade of the coordinate p^A : $|\,A\,| = 0\,,1$ for even, odd p^A.
The Hamiltonian supervector field corresponding to a function $F \in \mathcal{F}(\mathcal{S}M)$ is defined by :

$$\imath(\mathcal{SH}(F))\omega_\Sigma = \mathbf{d}F \quad \text{or, locally, by} \quad (\mathcal{SH}(F))^A(p)\,{}_A\omega_B = \frac{F\partial}{\partial p^B}\,,$$

where $\frac{F\partial}{\partial p^B}$ is the left partial derivative of F with respect to the coordinate p^B and where ${}_A\omega_B = (-1)^{|A|}\,\omega_{AB}$.
Since ω_Σ is nondegenerate, the inverse ${}^B(\omega^{-1})^C$ exists such that

$${}_A\omega_B\;{}^B(\omega^{-1})^C = {}_A\delta^C\,.$$

This yields the local coordinate expression :

$$(\mathcal{SH}(F))^A(p) = \frac{F\partial}{\partial p^B}\;{}^B(\omega^{-1})^A\,.$$

The Poisson superbracket of two functions is defined by :

$$\Big\{F_1\,,\,F_2\Big\}_\Sigma = -\imath(\mathcal{SH}(F_1))\,\imath(\mathcal{SH}(F_2))\,\omega_\Sigma\,,$$

or, locally, by

$$\Big\{F_1\,,\,F_2\Big\}_\Sigma(p) = -\frac{F_1\partial}{\partial p^A}\;{}^A(\omega^{-1})^B\;\frac{\partial F_2}{\partial p^B}\,.$$

One obtains now an exact sequence of super Lie algebra homomorphisms :

$$0 \to \mathcal{AF}(\mathcal{S}M) \to \mathcal{SH}am(\mathcal{S}M) \to 0$$

and

$$\mathcal{SH}\Big((\{F_1\,,\,F_2\}_\Sigma\Big) = -\,[\mathcal{SH}(F_1)\,,\,\mathcal{SH}(F_2)]\,.$$

In the case of interest, the supersymplectic 2-form is given by :

$$\omega_\Sigma(u,\theta,\tau) = \frac{1}{2!}\,\omega_{ij}(u)\,\mathbf{d}u^i \wedge \mathbf{d}u^j - \mathbf{d}\theta^\alpha \wedge \mathbf{d}\tau_\alpha\,,$$

where $\omega_{ij}(u)$ is the $\mathcal{A}_0$-extension of the symplectic 2-form $\omega_{ij}(x)$ on the body manifold M.
The components of the Hamiltonian supervector fields are :

$$(\mathcal{SH}(F))^i = \frac{F\partial}{\partial u^j}\;{}^j(\omega^{-1})^i\,,\;(\mathcal{SH}(F))^\alpha = -\frac{F\partial}{\partial \tau_\alpha}\,,\;(\mathcal{SH}(F))_\alpha = -\frac{F\partial}{\partial \theta^\alpha}\,.$$

and the Poisson superbracket reads :

$$\Big\{F_1\,,\,F_2\Big\}_\Sigma(u,\theta,\tau) = -\frac{F_1\partial}{\partial u^i}\;{}^i(\omega^{-1})^j\;\frac{\partial F_2}{\partial u^j} + \frac{F_1\partial}{\partial \tau_\alpha}\frac{\partial F_2}{\partial \theta^\alpha} + \frac{F_1\partial}{\partial \theta^\alpha}\frac{\partial F_2}{\partial \tau_\alpha}\,.$$

The ghost number and the BRST charge are now functions on $\mathcal{S}M$:

$$
\begin{aligned}
\Phi(u,\theta,\tau) &= \theta^\alpha\,\tau_\alpha\\
\Omega(u,\theta,\tau) &= -\frac{1}{2}\,f^\alpha{}_{\mu\nu}\,\theta^\mu\,\theta^\nu\,\tau_\alpha + \theta^\mu\,\Psi_\mu(u)\,.
\end{aligned}
$$

Their corresponding Hamiltonian supervector fields are :

$$\mathcal{SH}(\Phi) = -\theta^\alpha \frac{\partial}{\partial \theta^\alpha} + \tau^\alpha \frac{\partial}{\partial \tau^\alpha}$$
$$\mathcal{SH}(\Omega) = \theta^\mu \, \mathbf{X}_\mu{}^i(u) \frac{\partial}{\partial u^i} + \frac{1}{2} f^\alpha{}_{\mu\nu} \, \theta^\mu \, \theta^\nu \frac{\partial}{\partial \theta^\alpha} + \left(f^\kappa{}_{\alpha\nu} \, \theta^\nu \, \tau_\kappa - \Psi_\alpha(u) \right) \frac{\partial}{\partial \tau_\alpha} ,$$

where $\mathbf{X}_\mu{}^i(u)$ and $\Psi_\mu(u)$ are again the $\mathcal{A}_0$-extensions of the corresponding functions on the body manifold M. These functions (and their corresponding Hamiltonian supervector fields) form a subalgebra with Poisson (Lie) superbrackets :

$$\{\Phi, \Phi\}_\Sigma = 0 ,$$
$$\{\Phi, \Omega\}_\Sigma = \Omega ,$$
$$\{\Omega, \Phi\}_\Sigma = -\Omega ,$$
$$\{\Omega, \Omega\}_\Sigma = 0 ;$$

and

$$[\mathcal{SH}(\Phi), \mathcal{SH}(\Phi)] = 0 ,$$
$$[\mathcal{SH}(\Phi), \mathcal{SH}(\Omega)] = -\mathcal{SH}(\Omega) ,$$
$$[\mathcal{SH}(\Omega), \mathcal{SH}(\Phi)] = \mathcal{SH}(\Omega) ,$$
$$[\mathcal{SH}(\Omega), \mathcal{SH}(\Omega)] = 0 .$$

Let E_0 (E_1) denote the abstract even (odd) generator of the corresponding Lie superalgebra $\mathcal{SL}$ [16] then the supercommutation relations are :

$$[E_0 , E_0] = 0 ,$$
$$[E_0 , E_1] = +E_1 ,$$
$$[E_1 , E_0] = -E_1 ,$$
$$[E_1 , E_1] = 0 .$$

[16] In general a Lie superalgebra has even and odd generators with superbrackets : $[E_a, E_b] = E_c \; {}^cF_{ab}$, where the structure constants obey :

$${}^cF_{ab} = -(-1)^{|a||b|} \; {}^cF_{ba} \text{ and}$$
$${}^eF_{ad} \; {}^dF_{bc} + (-1)^{|a|(|b|+|c|)} \; {}^eF_{bd} \; {}^dF_{ca} + (-1)^{|c|(|a|+|b|)} \; {}^eF_{cd} \; {}^dF_{ab} .$$

The (left) adjoint representation of the Lie superalgebra is given by : ${}^c(\mathbf{A}_a)_b = {}^cF_{ab}$, acting from the left on E_b as : $\mathbf{A}_a(E_b) = E_c \; {}^cF_{ab}$.

The adjoint representation of $\mathcal{SL}$ is given by :

$$\mathbf{A}_0 = \begin{pmatrix} 0 & 0 \\ 0 & 1 \end{pmatrix} \quad , \quad \mathbf{A}_1 = \begin{pmatrix} 0 & 0 \\ -1 & 0 \end{pmatrix} .$$

These matrices obey the above supercommutation relations with the supercommutator defined by :

$$[\mathbf{A}_a, \mathbf{A}_b] = \mathbf{A}_a \, \mathbf{A}_b - (-1)^{|a||b|} \, \mathbf{A}_b \, \mathbf{A}_a .$$

This Lie superalgebra $\mathcal{SL}$ can be integrated to a Lie supergroup $\mathcal{SL}$ with elements $a(s,\sigma)$ depending on one even (s) and one odd parameter (σ) :

$$a(s,\sigma) = \exp\left(\begin{pmatrix} 0 & 0 \\ -\sigma & s \end{pmatrix} \right) = \begin{pmatrix} 1 & 0 \\ -\sigma \, f(s) & \exp(s) \end{pmatrix} ,$$

where

$$f(s) \equiv \frac{\exp(s) - 1}{s} = \exp(s/2) \, \frac{\sinh(s/2)}{s/2}$$

is a familiar function in Lie group theory.

The composition law in $\mathcal{SL}$ is obtained as : $a(s',\sigma') \, a(s,\sigma) = a(s'',\sigma'')$, with

$$s'' = s' + s$$

and

$$\sigma'' = \frac{\sigma' \, f(s') + \exp(s') \, \sigma \, f(s)}{f(s' + s)} .$$

It follows that :

$$a(s,\sigma) = a(s,0) \, a(0, f(-s)\,\sigma) = a(0, f(s)\,\sigma) \, a(s,0) .$$

The group action of $\mathcal{SL}$ on $\mathcal{SM}$, denoted by : $p \to p(s,\sigma) = a(s,\sigma)\,p$, is obtained from the integral supercurves of the supervector fields $\mathcal{SH}(\Phi)$ and $\mathcal{SH}(\Omega)$, which respectively are the solutions of :

$$\frac{d\,u^i}{d\,s} = 0$$
$$\frac{d\,\theta^\alpha}{d\,s} = -\theta^\alpha$$
$$\frac{d\,\tau_\alpha}{d\,s} = +\tau_\alpha ;$$

and of :

$$\frac{du^i}{d\sigma} = \theta^\mu \mathbf{X}_\mu{}^i(u)$$
$$\frac{d\theta^\alpha}{d\sigma} = \frac{1}{2} f^\alpha{}_{\mu\nu}\, \theta^\mu \theta^\nu$$
$$\frac{d\tau_\alpha}{d\sigma} = f^\kappa{}_{\alpha\mu}\, \theta^\mu \tau_\kappa - \Psi_\alpha(u) .$$

The equations defining the integral supercurve of $\mathcal{SH}(\Phi)$, of even type, read :

$$u^i(s,0) = u^i$$
$$\theta^\alpha(s,0) = \exp(-s)\,\theta^\alpha$$
$$\tau_\alpha(s,0) = exp(+s)\,\tau_\alpha$$

and those defining the odd type integral supercurve of $\mathcal{SH}(\Omega)$ are :

$$u^i(0,\sigma) = u^i + \sigma\,\theta^\mu \mathbf{X}_\mu{}^i(u)$$
$$\theta^\alpha(0,\sigma) = \theta^\alpha + \frac{1}{2}\sigma\, f^\alpha{}_{\mu\nu}\,\theta^\mu\theta^\nu$$
$$\tau_\alpha(0,\sigma) = \tau_\alpha + \sigma\left(f^\kappa{}_{\alpha\mu}\,\theta^\mu\tau_\kappa - \Psi_\alpha(u)\right)$$

The $\mathcal{SL}$-orbit of a point (u,θ,τ) is the (1,1)-dimensional supersubmanifold given by the equations :

$$u^i(s,\sigma) = u^i + \sigma\, f(-s)\,\theta^\mu \mathbf{X}_\mu{}^i(u)$$
$$\theta^\alpha(s,\sigma) = \exp(-s)\left(\theta^\alpha + \frac{1}{2}\sigma\, f(-s)\, f^\alpha{}_{\mu\nu}\,\theta^\mu\theta^\nu\right)$$
$$\tau_\alpha(s,\sigma) = \exp(+s)\left(\tau_\alpha + \sigma\, f(-s)\left(f^\kappa{}_{\alpha\mu}\,\theta^\mu\tau_\kappa - \Psi_\alpha(u)\right)\right) .$$

As expected, the action of $\mathcal{SL}$ is trivial when projected on the body manifold.
By construction, it is a Poisson action with a super-momentum mapping given by :

$$\mathcal{SJ} : \mathcal{SM} \to \mathcal{SL}^* : p \to \mathcal{SJ}(p) = \mathcal{SJ}_a\ {}^aE ,$$

where $({}^aE)$ is the dual basis in $\mathcal{SL}^*$ of (E_a) and where
$\mathcal{SJ}_0(p) = \Phi(p)$, $\mathcal{SJ}_1 = \Omega(p)$.
It is equivariant : $\mathcal{SJ}_a(p(s,\sigma)) = \mathcal{SJ}_b(p)\ {}^b\left(A^{-1}(s,\sigma)\right)_a$, or :
$\Phi(p(s,\sigma)) = \Phi(p) - \Omega(p)\,\sigma\, f(s)$ and $\Omega(p(s,\sigma)) = \exp(s)\,\Omega(p)$.

The h-cocycles are now identified with the functions $\Gamma \in \mathcal{F}(\mathcal{SM})$ such that :

$$\left\{\Omega , \Gamma\right\}_\Sigma = -\mathcal{L}_{\mathcal{SH}(\Omega)}(\Gamma) = 0 ,$$

$$\left\{\Phi , \Gamma\right\}_\Sigma = -\mathcal{L}_{\mathcal{SH}(\Phi)}(\Gamma) = h\,\Gamma .$$

This can be integrated to :

$$\left(a(s,\sigma)\right)^*\Gamma = \left(\mathcal{B}er\, a(s,\sigma)\right)^{-h}\Gamma = \exp(-h\,s)\,\Gamma ,$$

where $\mathcal{B}er$ is the Berezinian or superdeterminant (see [dW 87],[Le 80]).

The h-coboundaries are of the form :

$$\mathcal{L}_{\mathcal{SH}(\Omega)}\, B ,$$

where B can be choosen such that $\mathcal{L}_{\mathcal{SH}(\Phi)}\, B = -(h-1)\,B$.
In particular, the physical observables on the reduced phase space are given by the $\mathcal{SL}$-invariant functions of $\mathcal{F}(\mathcal{SM})$ modulo the 0-boundaries.

6. The cohomology description of the functions on the reduced phase space for systems with symmetry

In section **2.**, it was shown how a hamiltonian system with symmetry can be reduced to a lower dimensional problem due to the existence of constants of motion $\mathcal{J}(x) = \xi$.
The dynamical flow of the G-invariant hamiltonian h is confined to $\mathcal{J}^{-1}(\xi)$ and the dynamics is determined by the reduced hamiltonian h_ξ on the Marsden-Weinstein reduced symplectic manifold $\mathcal{MW}_\xi = \mathcal{J}^{-1}(\xi)/G_\xi$, where G_ξ is the little group of ξ.
The reduced hamiltonian h_ξ and the reduced symplectic twoform ω_ξ are defined by

$$\pi_\xi^* h_\xi = \imath_\xi^* h \quad \text{and} \quad \pi_\xi^* \omega_\xi = \imath_\xi^* \omega$$

where

$\pi_\xi : \mathcal{J}^{-1}(\xi) \to \mathcal{MW}_\xi$ is the canonical projection and

$\imath_\xi : \mathcal{J}^{-1}(\xi) \to M$ is the canonical inclusion.

This reduced dynamical problem actually depends only on the coadjoint orbit $\mathcal{O}$ generated by ξ and not on the particular ξ choosen on this orbit.
This follows from the KKS version of the Marsden-Weinstein construction, where the symplectic manifold M is extended to $\tilde{M} = M \times \mathcal{O}$ with symplectic two-form $\tilde{\omega} = \omega_M \oplus \omega_{\mathcal{O}}$, extended hamiltonian $\tilde{h}$ given by $proj_M^* \tilde{h} = h$ and momentum mapping $\tilde{\mathcal{J}} = \mathcal{J}_M \oplus \mathcal{J}_{\mathcal{O}}$.
The reduced symplectic manifold is then

$$\tilde{\mathcal{R}} = \tilde{\mathcal{J}}^{-1}(0)/G$$

with symplectic two-form $\tilde{\omega}_{\tilde{\mathcal{R}}}$ and reduced hamiltonian $\tilde{h}_{\tilde{\mathcal{R}}}$ defined by

$$\tilde{\pi}^* \tilde{\omega}_{\tilde{\mathcal{R}}} = \tilde{\imath}^* \tilde{\omega} \quad \text{and} \quad \tilde{\pi}^* \tilde{h}_{\tilde{\mathcal{R}}} = \tilde{\imath}^* \tilde{h} \,,$$

where $\tilde{\pi}$ and $\tilde{\imath}$ are respectively the canonical projection and the inclusion.
The construction is shown in fig.3 below .

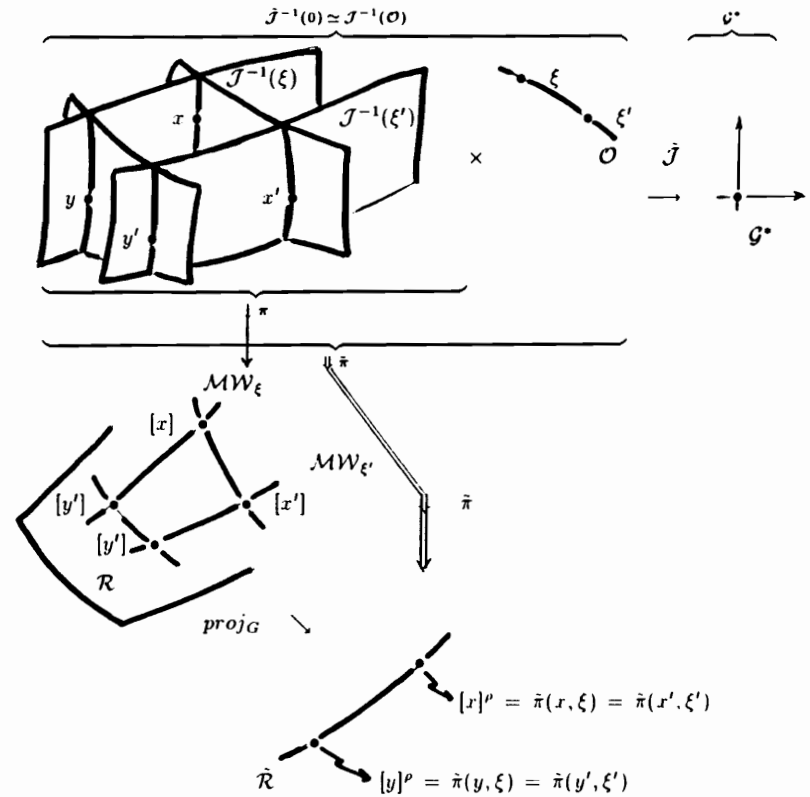

fig.3 The KKS version of the Marsden-Weinstein construction.

The above picture should be compared with fig.1, which it is an extension of.
Typical points of $\tilde{\mathcal{J}}^{-1}(0)$ are $(x,\xi),(y,\xi),\cdots$ where $x,y,\cdots \in \mathcal{J}^{-1}(\xi)$; $\xi \in \mathcal{O}$.
The points $x,y,\cdots \in \mathcal{J}^{-1}(\xi)$ are projected on $[x],[y],\cdots \in \mathcal{MW}_\xi$ by the projection π_ξ.
These projections $[x],[y],\cdots$ are identified with the projections of $x,y,\cdots \in \mathcal{J}^{-1}(\mathcal{O})$ through the projection $\pi : \mathcal{J}^{-1}(\mathcal{O}) \to \mathcal{R}$.
Now $\mathcal{R}$ is diffeomorphic to $\mathcal{MW}_\xi \times \mathcal{O}$ and its points are projected on the quotient of the residual group action, $\text{proj}_G : \mathcal{R} \to \mathcal{R}/G : [x] \to [x]^\rho = \text{proj}_G([x])$, such that $[x]^\rho = [x']^\rho$, if x and x' belong to the same G-orbit in $\mathcal{J}^{-1}(\mathcal{O})$. This quotient $\mathcal{R}/G$ is identified with the reduced manifold $\tilde{\mathcal{R}} = \tilde{\mathcal{J}}^{-1}(0)/G$ and $[x]^\rho = \tilde{\pi}(x,\xi)$.

To solve for the hamiltonian flow of $\tilde{h}_{\hat{\mathcal{R}}}$ on $\mathcal{R}$, it might be useful to describe the functions on $\mathcal{R}$ as cohomology classes in the same way that was done for the physical observables in gauge theories.

This leads to introduce a super Poisson algebra structure on

$$\tilde{\mathcal{P}} = \bigwedge(\mathcal{G}^* \oplus \mathcal{G}) \otimes \mathcal{F}(\tilde{M})$$

with Poisson superbracket given by :

$$\left\{\hat{A} \otimes \tilde{f}\,,\, \hat{B} \otimes \tilde{g}\right\}_\Sigma = \{\hat{A}, \hat{B}\}_S \otimes \tilde{f} \cdot \tilde{g} + \hat{A} \wedge \hat{B} \otimes \{\tilde{f}, \tilde{g}\}_{\tilde{M}}\,,$$

where the Poisson bracket on $\tilde{M}$ is given locally by :

$$\{\tilde{f}, \tilde{g}\}_{\tilde{M}}(x,\xi) = -\frac{\partial \tilde{f}(x,\xi)}{\partial x^i}\,\omega^{ij}(x,\xi)\,\frac{\partial \tilde{g}(x,\xi)}{\partial x^j} - \xi_\alpha\, f^\alpha{}_{\beta\gamma}\,\frac{\partial \tilde{f}(x,\xi)}{\partial \xi_\beta}\,\frac{\partial \tilde{g}(x,\xi)}{\partial \xi_\gamma}$$

The BRST charge reads :

$$\Omega = -\frac{1}{2} f^\alpha{}_{\beta\gamma}\,\epsilon^\beta \wedge \epsilon^\gamma \wedge \vec{e}_\alpha + \epsilon^\mu\left(\Psi_\mu(x) - \xi_\mu\right).$$

The ghost number remains unchanged :

$$\Phi = \epsilon^\mu \wedge \vec{e}_\mu\,.$$

The Poisson superbrackets with the basic elements of $\tilde{\mathcal{P}}$ are :

$$\begin{aligned}
\left\{\Omega\,,\, x^i\right\}_\Sigma &= -\epsilon^\mu\,\frac{\partial \Psi_\mu(x)}{\partial x^j}\,\omega^{ji}(x)\\
\left\{\Omega\,,\, \xi_\alpha\right\}_\Sigma &= \epsilon^\mu\,\xi_\nu\, f^\nu{}_{\mu\alpha}\\
\left\{\Omega\,,\, \epsilon^\mu\right\}_\Sigma &= -\frac{1}{2} f^\mu{}_{\alpha\beta}\,\epsilon^\alpha \wedge \epsilon^\beta\\
\left\{\Omega\,,\, \vec{e}_\alpha\right\}_\Sigma &= -f^\mu{}_{\alpha\nu}\,\epsilon^\nu \wedge \vec{e}_\mu + \Psi_\alpha(x) - \xi_\alpha\\
\left\{\Phi\,,\, x^i\right\}_\Sigma &= \left\{\Phi\,,\, \xi_\alpha\right\}_\Sigma = 0\\
\left\{\Phi\,,\, \epsilon^\alpha\right\}_\Sigma &= \epsilon^\alpha\\
\left\{\Phi\,,\, \vec{e}_\alpha\right\}_\Sigma &= -\vec{e}_\alpha\,.
\end{aligned}$$

This super Poisson algebra is identified with the algebra of functions of the extended supersymplectic supermanifold :

$$\begin{aligned}
\mathcal{S}\tilde{M} &= \tilde{M}_{even} \times (\mathcal{G} \oplus \mathcal{G}^*)_{odd}\\
&= (M_{even} \times \mathcal{O}_{even}) \times (\mathcal{G} \oplus \mathcal{G}^*)_{odd}\,.
\end{aligned}$$

with points given by

$(m + (N - f))$ even coordinates $(u^i, v_\alpha (\in \mathcal{O}_{even}))$ and

$2N$ odd coordinates $(\theta^\alpha, \tau_\beta)$.

The superbracket on $\mathcal{F}(\mathcal{S}M$ results from the supersymplectic twoform :

$$\tilde{\omega}_\Sigma(u, v, \theta, \tau) = \omega_M(u) + \omega_{\mathcal{O}}(v) - \mathrm{d}\theta^\alpha \wedge \mathrm{d}\tau_\alpha\,.$$

The BRST charge and the ghost number are :

$$\begin{aligned}
\Omega &= -\frac{1}{2} f^\alpha{}_{\beta\gamma}\,\theta^\beta\,\theta^\gamma\,\tau_\alpha + \theta^\mu\,(\Psi_\mu(u) - v_\mu)\\
\Psi &= \theta^\mu\,\tau_\mu\,.
\end{aligned}$$

They obey the same relations as before :

$$\begin{aligned}
\left\{\Psi\,,\, \Psi\right\}_\Sigma &= 0 = \left\{\Omega\,,\, \Omega\right\}_\Sigma\\
\left\{\Psi\,,\, \Omega\right\}_\Sigma &= \Omega = -\left\{\Omega\,,\, \Psi\right\}_\Sigma\,,
\end{aligned}$$

so that there is still a Ω-cohomology on the Poisson algebra $\tilde{\mathcal{P}}$, which is Z-graded by the ghost number.

The set of h-cochains is

$$\tilde{\mathcal{P}}^h = \{C \in \mathcal{F}(\mathcal{S}M) \mid \left\{\Psi\,,\, C\right\}_\Sigma = h\,C\}\,.$$

The h-cocycles are

$$\tilde{Z}^h = \{Z \in \tilde{\mathcal{P}}^h \mid \left\{\Omega\,,\, Z\right\}_\Sigma = 0\}$$

and the h-coboundaries are

$$\tilde{B}^h = \{B \in \tilde{\mathcal{P}}^h \mid B = \left\{\Omega\,,\, C'\right\}_\Sigma\,,\, C' \in \tilde{\mathcal{P}}^h\}\,.$$

The h-comology is then $\tilde{H}^h(\tilde{\mathcal{P}}) = Z^h / B^h$ and the functions on the reduced manifold $\hat{\mathcal{R}}$ can be identified with the zero cohomology :

$$\mathcal{F}(\hat{\mathcal{R}}) = H^0(\tilde{\mathcal{P}})\,.$$

This description is still far from satisfactory since the supersymplectic manifold

$$\mathcal{S}M = M_{even} \times \mathcal{O}_{even} \times (\mathcal{G} \oplus \mathcal{G}^*)_{odd}$$

is not easy to deal with. It can however be considered as a subsupermanifold of the following extended (m + 2N,2N)-dimensional supermanifold :

$$M_{ext} = M_{even} \times (\mathcal{G} \oplus \mathcal{G}^*)_{even+odd} .$$

The group G with its Poisson action on M can then also be extended to a supergroup G_{ext} acting on M_{ext}.

This kind of program was (partially) realized in the so-called bosonic version of the BRST formalism ([DEGST 91]).

A more detailed examination of this extension is postponed to later work.

References

[AbM 81] : R.Abraham and J.E.Marsden, "Foundations of Mechanics", Benjamin/Cummings, Reading(1981).

[Al 91] : C.Albert, "Le théorême de réduction de Marsden-Weinstein en géométrie cosymplectique et de contact", J.Geom.Phys.,**6**,627(1989).

[Ar 76] : V.Arnold, "Méthodes Mathématiques de la Mécanique Classique", MIR,Moscou(1976).

[BarBH 89] : C.Bartocci, U.Bruzzo and D.Hernández Ruipérez, "A remark on a new category of Supermanifolds", J.Geom.Phys.,**6**,509(1989).

[BarBHP 92] : C.Bartocci, U.Bruzzo, D.Hernández Ruipérez and V.G.Pestov, "Foundations of supermanifold theory. The axiomatic approach", Univ.di Genova,preprint N.194(1992).

[Bat 84] : M.Batchelor, "Graded manifolds and supermanifolds", in "Mathematical aspects of Superspace",ed.H.J.Seifert et al., Reidel,Dordrecht(1984).

[BeL 75] : F.A.Berezin and D.A.Leites, "Supermanifolds", Sov.Math.Dokl.,**16**,1218(1975).

[Bi 75] : G.Bizet,"Carmen",Acte I,Paris(1875).

[BoT 82] : R.Bott and L.W.Tu, "Differential Forms in Algebraic Topology", Springer, New-York(1982).

[dW 87] : B.de Witt,"Supermanifolds",Cambridge Univ.Press(1987).

[D-V 87] : M.Dubois-Violette, "Systèmes Dynamiques Contraints : l'Approche Homologique", Ann.Inst.Fourier,**37**,45(1987).

[DET 90] : C.Duval, J.Elhadad and G.M.Tuynman, "The BRS method and Geometric Quantization, some examples", Comm.Math.Phys.,**126**,535(1990).

[DEGST 91] : C.Duval, J.Elhadad, M.J.Gotay, J.Sniatycki and G.M.Tuynman, "Quantization and Bosonic BRST Theory", Ann.Phys.,**206**,1(1991).

[FHST 89] : J.Fisch, M.Henneaux, J.Stasheff and C.Teitelboim, "Existence, Uniqueness and Cohomology of the Classical BRST Charge with Ghosts of Ghosts", Comm.Math.Phys.,**120**,379(1989).

[FK 90] : M.Forger and J.Kellendonk, "Classical BRST Cohomology and Invariant Functions on Constraint Manifolds I", preprint THEP 90/6,Univ.Freiburg,june(1990).

[FO'F 90] : J.M.Figueroa-O'Farill, "A Topological characterization of Clasical BRST Cohomology", Comm.Math.Phys.,**127**,181(1990).

[FO'F-K 91] : J.M.Figueroa-O'Farill and T.Kimura, "Geometric BRST Quantization, I: Prequantization", Comm.Math.Phys.,**136**,209(1991).

[H 85] : M.Henneaux, "Hamiltonian form of the Path Integral for Theories with a Gauge Freedom", Phys.Rep.,**126**,1(1985).

[HT 88] : M.Henneaux and C.Teitelboim, "BRST Cohomology in Classical Mechanics", Comm.Math.Phys.,**115**,213(1988).

[GS 84] : V.Guillemin and S.Sternberg, "Symplectic techniques in physics", Cambridge Univ.Press(1984).

[KKS 78] : D.Kazhdan, B.Kostant and S.Sternberg, "Hamiltonian Group Action and Dynamical Systems of Calogero Type", Comm.Pure Appl.Math.,**31**,481(1978).

[Kz 50] : J-L.Koszul, "Homologie et Cohomologie des Algèbres de Lie", Bull.Soc.Math.France,**78**,65(1950).

[Kt 77] : B.Kostant, "Graded manifolds, graded Lie theory, and prequantization", Springer Lect.Not.Math.,**570**,177(1977).

[KS 87] : B.Kostant and S.Sternberg, "Symplectic Reduction, BRS Cohomology and Infinite-dimensional Clifford Algebras", Ann.Phys.,**176**,49(1987).

[Le 80] : D.A.Leites,"Introduction to the Theory of Supermanifolds", Russian Math.Surveys **35**,1(1980).

[LM 86] : P.Libermann and C-M.Marle, "Géométrie Symplectique. Bases Théoriques de la Mécanique", Pub.Math.Univ.Paris VII,Paris(1986).

[Lo 88] : R.Loll, "The Extended Phase Space of the BRS Approach", Comm.Math.Phys.,**119**,509(1988).

[Lo 90] : R.Loll, "Noncommutativity of constraining and quantizing : A U(1)-gauge model", Phys.Rev.,**D41**,3785(1990).

[Lo 91] : R.Loll, "Canonical and BRST-Quantization of Constrained Systems", Bonn-HE-91-17,Bonn(1991).

[McM 87] : D. McMullan, "Yang-Mills Theory and the Batalin-Fradkin-Vilkovisky formalism", J.Math.Phys.,**28**,428(1987).

[MR 86] : J.Marsden and T.Ratiu, "Reduction of Poisson Manifolds", Lett.Math.Phys.,**11**,161(1986).

[MW 74] : J.Marsden and A.Weinstein, "Reduction of Symplectic Manifolds with Symmetry", Rep.Math.Phys.,**5**,121(1974).

[M 80] : P.K.Mitter, "Geometry of the Space of Gauge Orbits and the Yang-Mills Dynamical System", p.265 in "Recent Developments in Gauge Theories", (Cargèse 1979), ed.t'Hooft et al., Plenum Press, New-York(1980).

[R 86] : M.Rothstein,"The axioms of supermanifolds and a new structure arising from them", Trans.Am.Math.Soc.,**297**,159(1986).

[R 90] : M.Rothstein, "The structure of supersymplectic supermanifolds", SISSA preprint n° 43 FM,Trieste(1990).

[S 88] : J.Stasheff,"Constrained Poisson algebras and strong homotopy representations", Bull.Am.Math.Soc., **19**,287(1988).

[T 89] : G.M.Tuynman, "Geometric Quantization of the BRST Charge", preprint MSRI 06124-89, Berkeley, july(1989).