ICRR-REPORT-454-99-12 I
Jun 1999

(26)

C99-04-24.1

JAN 5 2000

ICRR-454-99-12 I

Fermilab Library
0 1160 0062653 5

# Present Status of Centauro Events by Emulsion Chamber Experiment at Mt. Chacaltaya

Akinori Ohsawa (Chacaltaya Emulsion Chamber Collaboration)

*Institute for Cosmic Ray Research, University of Tokyo, Tanashi, Tokyo, 188-8502 Japan.*

## I. Content (Fig. 1)

## II. Chacaltaya Emulsion Chamber Experiment

### (1) Emulsion chamber[1, 2]

Figs. 2 ~ 6 show the structure and the performance of the emulsion chamber. The emulsion chamber consists of sensitive layers (a nuclear emulsion plate and X-ray films) and Pb plates, piled up alternately. An electron (or a photon) of high energy, incident upon the chamber, produces a cascade shower in the chamber through the chain of electromagnetic interactions with Pb. The cascade shower is detected by the sensitive layers. (Fig. 3) We can determine the energy and the starting position of the shower by comparing the development of the shower size, observed by several sensitive layers, with those which are calculated by the cascade theory.

A hadron, incident upon the chamber, makes a nuclear collision with Pb to produce secondary particles. The $\pi^0$'s among the produced particles decay into $\gamma$-rays, which produce a cascade shower. (Fig. 6) One can see through the different mechanism of the shower production between $(e, \gamma)$'s and hadrons that the showers of the deep starting point are the hadron-induced ones and that the observed energy ($E_{ob}$) of the hadron-induced shower is not the energy of the incident hadron ($E_h$) but that of $(e, \gamma)$'s which are produced in the collision, *i.e.* $E_{ob} = k_\gamma E_h$ ($< k_\gamma > \simeq 1/6$).

Therefore the emulsion chamber is sensitive to $(e, \gamma)$'s and hadrons of the energy, for example, $> 1$ TeV and $> 6$ TeV, respectively. Furthermore the hadron detection is limited by the long collision mean free path of hadrons in Pb. (Fig. 5)

### (2) Experimental site (Fig. 7)

Chacaltaya Cosmic Ray Observatory is the highest laboratory in the world.

### (3) Two-storied emulsion chamber

Two-storied emulsion chamber is used to study the nuclear collisions — multiple particle production — in the energy region of $10^{14}$ eV. It consists of the upper chamber, the target layer, the empty space and the lower chamber. (Figs. 8 and 9) C-jets, the nuclear collisions observed by the two-storied chamber, have advantages of the known interaction vertex and the direct observation of the produced particles, compared with those in the atmosphere.

The experiment by the two-storied emulsion chambers is quite successful, and the data reveal various new points on high energy nuclear collisions, such as the violation of the Feynman scaling law, the increase of the average transverse momentum $< p_T >$ of the produced particles, the positive correlation between the rapidity density and $< p_T >$, etc.[3, 4] It is important to point out that these data are obtained in advance of the CERN SPS $\bar{p}p$ collider and that all of them are confirmed by the accelerator experiments. [6] (Fig. 10)

I have no intention of entering the details of the above items which have been discussed elsewhere[5], but would like to mention one point which is discussed in the symposium by

another speaker. It is about the energy spectrum of produced particles in the energy region of $10^{14}$ eV.[7]

**(4) The rapidity density distribution in $10^{14}$ eV**

Fig. 12 shows the pseudo-rapidity density distributions for the produced charged particles in $\bar{p}p$ collisions at $\sqrt{s} = 630$ GeV.[1][5] The data are by the cosmic-ray experiment (C-jets by Chacaltaya Emulsion Chamber Collab.[8, 3]), by the accelerator experiments (UA5 Collab.[9], UA7 Collab.[10] and R. Harr *et al.*[11] by CERN SPS $\bar{p}p$ collider) and by the simulations[12]. (Fig. 11) We can see in Fig. 12;

(1) Three sets of data by UA5, UA7 and C-jets are consistent one another, and are not consistent with the simulations in the forward region.

(2) Only one set of data by R. Harr *et al.* is consistent with the simulation.

(3) Predictions by the simulations, all of which are based on QCD-picture, differ appreciably each other.

Hence we can say at least that *the QCD picture is not established well yet to describe the multiple particle production.*

## III. Centauro events

**(1) Centauro-I and a new clean event**

When a high energy cosmic-ray event hits the two-storied chamber, a number of showers are observed in the upper chamber while a few in the lower chamber, due to the performance of the emulsion chamber. Most of the observed events show such features. In 1972, however, we encounter an event of contrasting feature, which indicates that the event is *extremely hadron-rich.*[2, 13] (Figs. 13 and 14) We have several Centauro-type events so far through a series of the exposure of emulsion chambers at Mt. Chacaltaya, but all of them are contaminated by $(e, \gamma)$ showers, probably due to subsequent nuclear collisions in the atmosphere. (Fig. 17)

Recently we report another clean event of Centauro-type.[14] (Fig. 15)

**(2) Statistics of Centauro events**

One can discuss the statistics of Centauro events in two ways. The one is that among the observed events and the other is that among the simulated events.[5]

(i) The statistics among the observed events.

Because the intensity of the cosmic-ray events of $\sum E_{ob}$ (the sum of the shower energies in an event, observed by the emulsion chamber) is given by

$$I(>\sum E_{ob}) = 0.9\left(\frac{\sum E_{ob}}{100\ \mathrm{TeV}}\right)^{-1.25\pm0.10} \qquad (/\mathrm{m}^2\cdot\mathrm{yr}\cdot\mathrm{sr})$$

in $\sum E_{ob} = 100 \sim 3000$ TeV[15], we can estimate the number of cosmic-ray events at the observed energy of the respective Centauro events. Hence we obtain the probabilities of Centauro-I and the new event among the total observed events. (Fig. 18)

(ii) The statistics among the simulated events.

Fig. 16 shows the diagram of $N_h$ *vs.* $Q_h$ for the new event, where $N_h$ is the number of the hadron-induced showers (with the energy exceeding 1 TeV) and $Q_h$ is the ratio between the total energy of the hadron-induced showers and total observed energy, defined as

[1]We can neglect the difference due to the fact whether the surviving proton is included or not in the data, because the rapidity density of the surviving proton is 0.1 approximately.

$$Q_h \equiv \frac{\sum E_h^{(\gamma)}}{\sum E_h^{(\gamma)} + \sum E_{(e,\gamma)}}$$

The diagram presents the new event (C22) and the contours of the distribution of 13,714 simulated events.[2] The figures, attached to the contours, are the densities of the events, for example, $1(-2) = 1.0 \times 10^{-2}$.

Fig. 17 shows the diagram for all the events (with $\sum E_{ob} \geq 100$ TeV) which are observed by a series of the exposures of emulsion chambers and for the density contours of the simulated events. (One should notice that the energy threshold of showers is different in Fig. 16 and in Fig. 17.) The events with the numbers (I $\sim$ IV, and 1) are the candidates of Centauro events. Most of the candidate events have the value $Q_h < 1$, which may be attributed to the subsequent nuclear collisions in the atmosphere after the production of Centauro event.

Noticing that the contour is almost in parallel with the $x$-axis, one can estimate the statistics of Centauro events by extrapolating the density distribution along $y$-axis. (Fig. 18) The large difference between the estimated probabilities between (i) and (ii) indicates that *Centauro events are not due to the possible fluctuations of the involved processes.*

**(3) Discussion on the origin of Centauro events**[5]

Since the discovery of Centauro-I, many proposals are presented to describe the event. Those are classified into two categories of the primary origin and of the interaction origin, which are called *exotic primary* and *exotic interaction* hereafter, respectively. That is, some exotic component among the primary cosmic rays, such as quark glob[17], strange quark matter[18], etc., produces Centauro event, or there is a channel of exotic mechanism to produce the Centauro events, such as Centauro fire-ball[13, 2], DCC[19], etc.[20], among the nuclear collisions in high energy region. (Fig. 19) It is our regret, however, to have to say that none of these proposals can describe Centauro events fully and convincingly. In this paper we try to discuss the origin of Centauro events from experimental side.

We discuss the items in Fig 22 one by one.

(1) Production threshold. We are inclined to assume that there is no production threshold for Centauro events, because the new event has low energy compared with Centauro-I. (Fig. 19) It follows that *exotic primary* is probable as the origin of Centauro events.

(2) Characteristics of the produced particle in Centauro events. We take an analogy of the fragmentation of the nucleus for the particle production from *exotic primary*, and that of the multiple particle production for the particle production in *exotic interaction.*

The energy spectrum of the produced particles might be $\propto \ \delta(E-\epsilon)dE$ ($\delta(x)$ : Dirac delta function) and $\propto \ dE/E$, respectively. Fig. 21 shows that the observed energy spectra of hadron-induced showers are consistent with $dE/E$ both for Centauro-I and the new event.[3]

The transverse momentum of the produced particles is small and large, respectively.

There may not and may exist a surviving particle, respectively. Centauro V (Fig. 17) contains one shower of distinguished energy, which may be identified as the surviving particle.

(3) Penetrative incident particle. We are inclined to conclude that the production point is near above the chamber both for Centauro-I and for the new event, because otherwise

[2]The simulation is based on the UA5 code for nuclear collisions and 'normal' composition for the primary cosmic rays.[16]

[3]DCC predicts another type of the energy spectrum of the produced particles, which will be examined soon.

the events would be contaminated by the nuclear and electromagnetic cascade processes in the atmosphere.
(4) Centauro search by accelerator experiments. Centauro searches are with negative result both by CERN $\bar{p}p$ collider ($\sqrt{s}$ = 900 GeV)[21, 22] and by FNAL Tevatron ($\sqrt{s}$ = 1800 GeV).[23, 24]
(5) Simulations, made so far, which are based on *exotic interaction* models fail to produce Centauro events with comparable frequency to the experiment.[16, 25](Fig. 20)
(6) Strong attenuation of cosmic rays. Emulsion chamber experiments at high mountain altitudes indicate that the attenuation of cosmic rays is stronger than expected. (Fig. 20) For example, the frequency of high energy events which are observed by emulsion chambers cannot be described by the simulation where the models for nuclear collisions and the primary cosmic-rays are ordinary ones.[15, 16, 26] Centauro events of high multiplicity, observed in Centauro-I, may be related to the strong attenuation of cosmic rays.

## References


[1] C.M.G. Lattes *et al.*(Chacaltaya Emulsion Chamber Collaboration), Prog. Theor. Phys. Suppl. No.47 (1971) 1.
[2] C.M.G. Lattes *et al.*, Phys. Rep. Vol.65 No.3 (1980) 152.
[3] J.A. Chinellato *et al.* (Chacaltaya Emulsion Chamber Collaboration), Prog. Theor. Phys. Suppl. No.76 (1983) 1.
[4] H. Kumano, Prog. Theor. Phys. Suppl. No.76 (1983) 51.
[5] A. Ohsawa, Preprint of Inst. for Cosmic Ray Research (Univ. of Tokyo) ICRR-Report-434-98-30 (1998); Nucl. Phys. B (Proc. Suppl.) (to be published).
[6] F. Halzen *et al.*, Nucl. Phys. B190 (1987) 213.
[7] A. Ohsawa, Prog. Theor. Phys. 92 (1994) 1005.
[8] N. Arata, Nucl. Phys. B211 (1983) 189.
[9] G.L. Alner *et al.*, Z. Phys. C33 (1986) 1; Nucl.Phys. B291 (1987) 445; Phys. Rep. Nos.5&6 (1987) 23.
[10] E. Pare *et al.*, Phys. Lett. B242 (1990) 531.
[11] R. Harr *et al.*, Phys. Lett. B401 (1997) 176.
[12] J. Knapp *et al.*, Nucl. Phys. B (Proc. Suppl.) 52B (1997) 136.
[13] S. Hasegawa, Preprint of Inst. for Cosmic Ray Research (Univ. of Tokyo), ICR-Report-151-87-5 (1987).
[14] S.L.C Barroso *et al.*, Proc. 25th Intern. Cosmic Ray Conf. (Durban) Vol.6 (1997) 53.
[15] L.T. Baradzei *et al.* (Chacaltaya and Pamir Collaboration), Nucl. Phys. B 370 (1992) 365.
[16] M. Tamada, J. Phys. G 20 (1994) 487.
[17] J.D. Bjorken *et al.*, AIP Conf. Proc. No.49 (1978) 509; Phys. Rev. D 20 (1979) 2353.
[18] E. Witten, Phys. Rev. D 30 (1984) 272.
[19] J.D. Bjorken, Int. J. Mod. Phys., A7 (1992) 4189.
[20] A. Angelis *et al.*, Nucl. Phys. B (Proc. Suppl.) (to be published).
[21] G. Arnison *et al.* (UA1 Collaboration), Phys. Lett. 122 B (1983) 189.
[22] K. Alpgard *et al.*(UA5 Collaboration), Phys. Lett. 115 B (1982) 71.
[23] P.L. Melese (CDF Collaboration), Proc. XI Sympo. on Hadron Collider Physics (1997) 360.
[24] T.C. Brooks *et al.*, Phys. Rev. D 55 (1997) 5667.
[25] C.E. Navia *et al.*, Phys. Rev. D 50 (1994) 5732.
[26] N. Kawasumi *et al.*, Phys. Rev. D 53 (1996) 3524.

(1) Emulsion Chamber
Structure
Performance

(2) Multiple Particle Production
1. MPP in $10^{14}$ eV by two-storied EC
2. Feynman scaling law holding/breaking ?
$10^{14}$ eV — $10^{16}$ eV — $10^{18}$ eV

(3) Centauro Events
1. Review
2. New Centauro event
3. Discussion
Probability
Origin $\cdots$ exotic primary or exotic interaction ?

Fig. 1

**Emulsion Chamber**

**Multiple sandwich of**

**Pb plates (1cm)** and **Sensitive layers**

**(emulsion plate / X-ray film)**

**Constants of Pb**

$X_0 = 0.57$ **(cm)**

$\lambda_{inel} = 18.5$ **(cm)**

**Performance**

**Detection of cascade shower**

**(1) Position and Angle of incidence**

**(2)** $e/\gamma$ **and hadrons**

**(3) Energy**

($E_0$ **for** $e/\gamma$, $k_\gamma E_0$ **for hadrons)**

**(4)** $E_{th} = 1$ **(TeV)**

**"A family", incident upon the chamber,**

**produces many showers in the upper chamber,**

and **a few showers in the lower chamber.**

Fig. 2

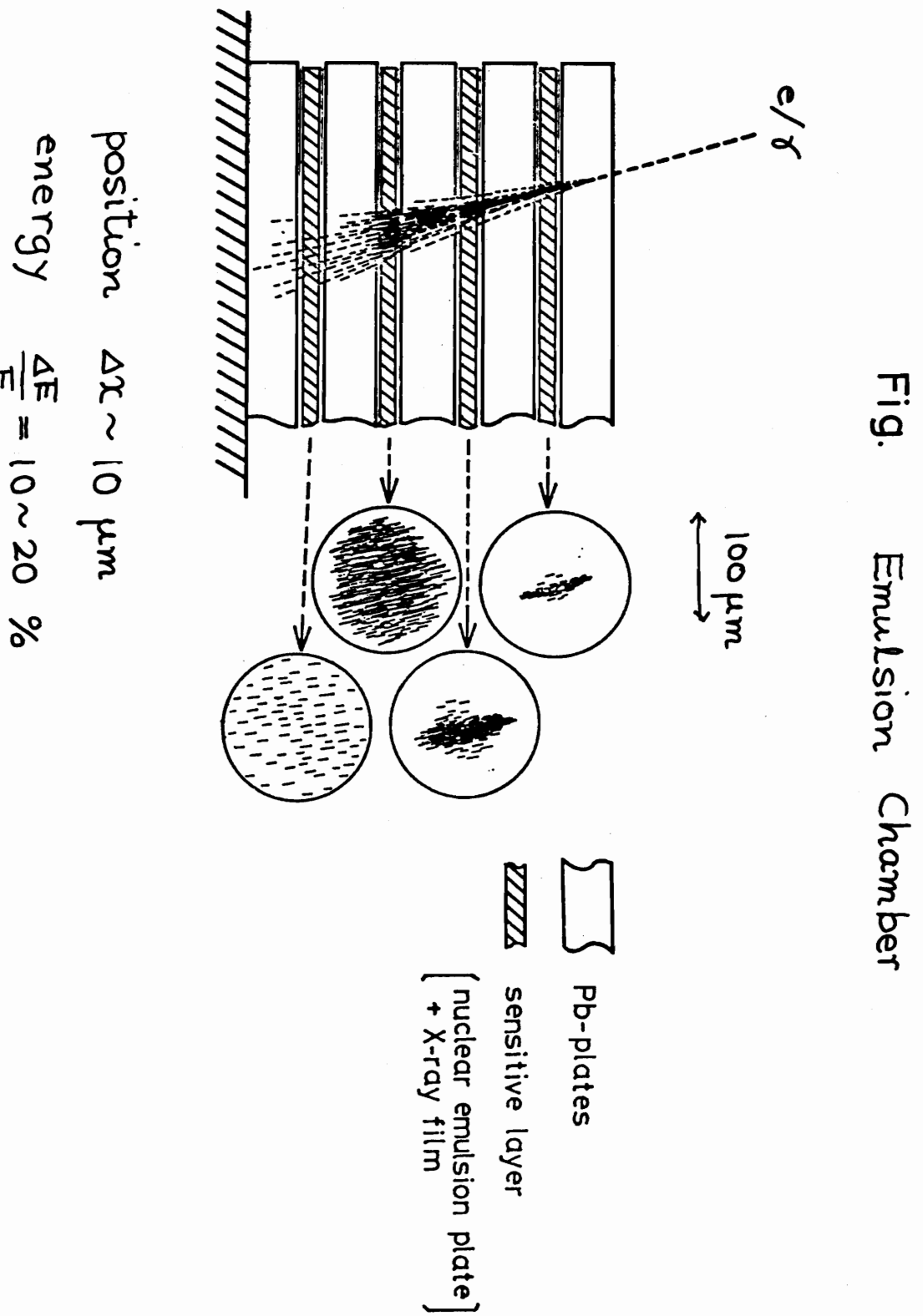
Fig. Emulsion Chamber
e/γ
100 μm
Pb-plates
sensitive layer
nuclear emulsion plate
+ X-ray film
position Δx ~ 10 μm
energy ΔE/E = 10 ~ 20 %

Fig. 3

## Emulsion Chamber

I. Structure

Pb-plate + sensitive layer (X-ray film / nuclear emulsion plate)

II. Performance

detection of electron showers, but not of single charged particle

$\Longrightarrow$ high detection threshold, *i.e.* $E_{th} \sim 1$ TeV.

| Measurable | Nuclear emulsion plate | X-ray film |
|---|---|---|
| shower position | $\Delta x \sim 10$ ($\mu m$) | $\Delta x \sim 100$ ($\mu m$) |
| shower energy (cascade theory) | electron tracks in the shower (microscope) absolute $\frac{\Delta E}{E} \sim 20$ % $E_{th} = 0.1$ TeV | opacity of the shower (microphotometer) relative $\frac{\Delta E}{E} \sim 10$ % $E_{th} = 1$ TeV |
| shower structure | observable | impossible |

Fig. 4

III. Identification of (e, $\gamma$) / hadron

| | (e, $\gamma$) | hadron |
|---|---|---|
| detect. mech. | cascade process<br>$\Longrightarrow$ electron shower | multiple particle production<br>$\Longrightarrow \pi^0 \rightarrow 2\gamma$ decays<br>$\Longrightarrow$ electron shower |
| collision m.f.p.<br>in the chamber | $X_0 = 0.57\ (cm)$ | $\lambda = 18.5\ (cm)$ |
| detect. prob.<br>$(E_{\text{shower}} > E_{\text{th}})$ | 100 % | $1 - \exp\left[-\frac{T}{\lambda}\right] \sim 60\ \%$ |
| obs. energy | $E_0$ | $k_\gamma E_0 \sim \frac{1}{6} E_0$ |
| Shower curve<br>starting point<br>shape | <br>shallow<br>cascade curve | <br>deep<br>diff. from cascade curve<br>(dull or multiple peaks<br>due to successive int's.) |
| Shower structure | simple | complicated |

sensitive to (e,$\gamma$)'s

not so sensitive to hadrons

Fig. 5

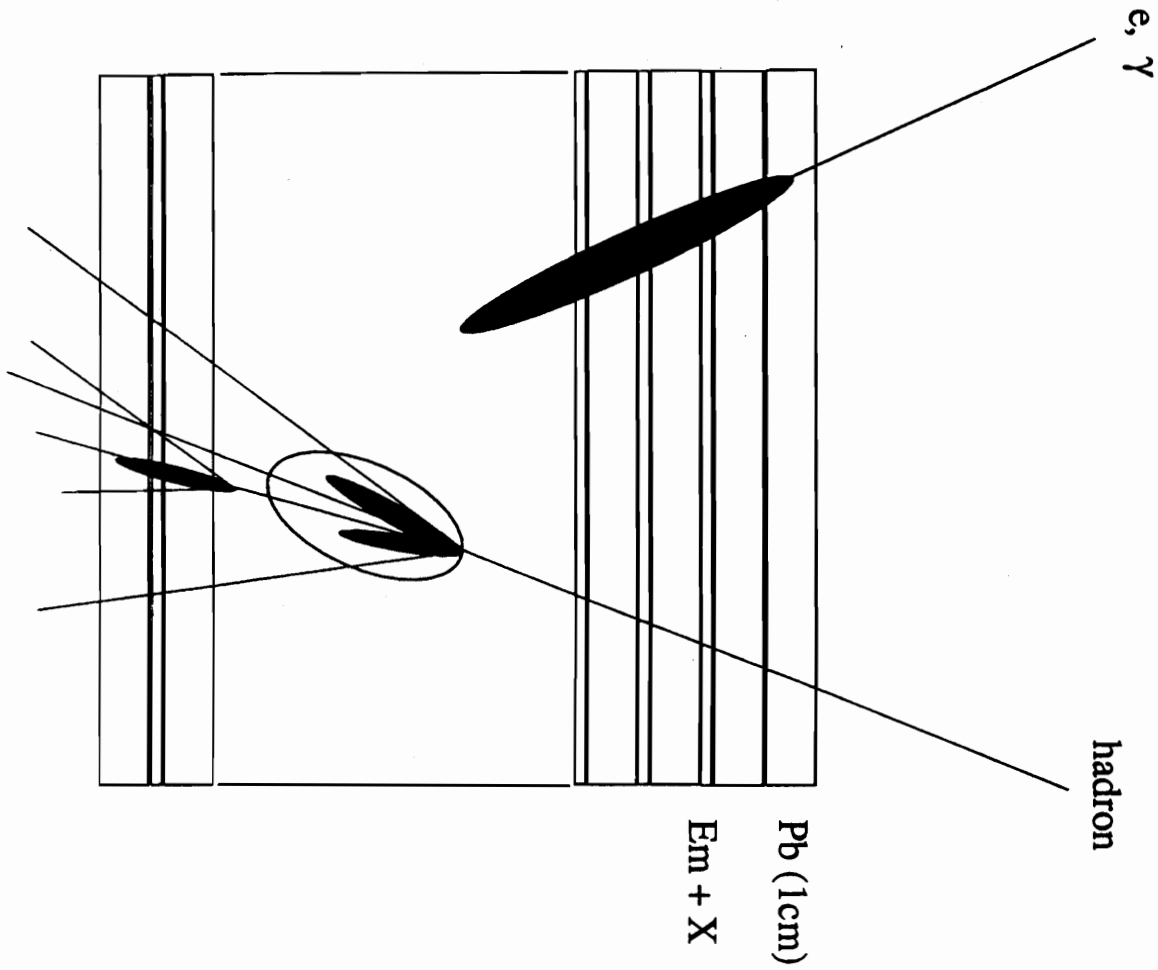


Fig. 6

## Experimental Apparatus

**Chacaltaya Cosmic-Ray Observatory**

5,200 m (540 g/cm$^2$)

La Paz, Bolivia.

**Emulsion Chamber C22**

Two-storey type

- upper chamber
- target layer
- space
- lower chamber

Fig. 7

Two-storied Emulsion Chamber

| | Old | | New | | Remark |
|---|---|---|---|---|---|
| | Area | Thickness | Area | Thickness | |
| Upper Chamber | 6.0 ($m^2$) | 6 cm Pb | 44.2 ($m^2$) | 6 cm Pb | Shielding atmospheric (e, $\gamma$)'s, Transparent for hadrons |
| Target Layer | — | 70 cm Pitch | — | 23 cm Pitch<br>30 cm Polyethylene | Producing nuclear interactions<br>Transparent for (e,$\gamma$)'s |
| Space | — | 80 cm | — | 158 cm<br>237 cm | Divergence of produced particles |
| Lower Chamber | 6.0 ($m^2$) | 10 cm Pb | 32.0 ($m^2$) | 10 cm Pb | Detection of (e, $\gamma$)'s and hadrons |

Fig. 8

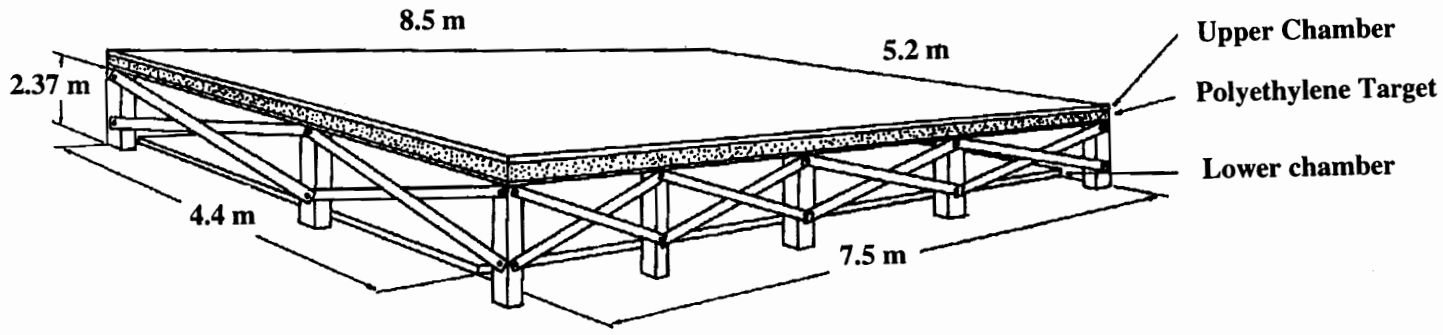
8.5 m
5.2 m
2.37 m
4.4 m
7.5 m
Upper Chamber
Polyethylene Target
Lower chamber

Fig. 9

"Recent results from the UA1 and UA5 experiments at the CERN $\bar{p}p$ collider have shown that the emulsion chamber data up to $\sim$ 100 TeV (C-jets) are in good agreement with the accelerator data."

(F. Halzen et N. Yamdagni al.,
Nucl. Phys. **B190** (1987) 213.)

(訳)

CERN $\bar{p}p$ 加速器を用いた UA1 と UA5 実験の最近の結果は、約 100 TeV までのエマルションチェンバーのデータ (C-jets) が、加速器のデータとよく一致することを示した。

Fig. 10

## Feynman scaling law ($10^{14}$ eV)

**(1) Data**

**Accelerator data**

**UA5** ($\sqrt{s} = 53$, 200, 546, 900 **GeV**)

**UA7** ($\sqrt{s} = 630$ **GeV**)

**R. Harr et al.** ($\sqrt{s} = 630$ **GeV**)

**Cosmic-ray data**

**C-jets**

**Simulations**

**based on QCD**

**(2) Observation**

1. **UA5, UA7 and C-jets are consistent.**
2. **They show scale-breaking.**
3. **R. Harr et al. and simulations predicts larger density than the scaling function.**

QCD picture is not established well yet.

Fig. 11

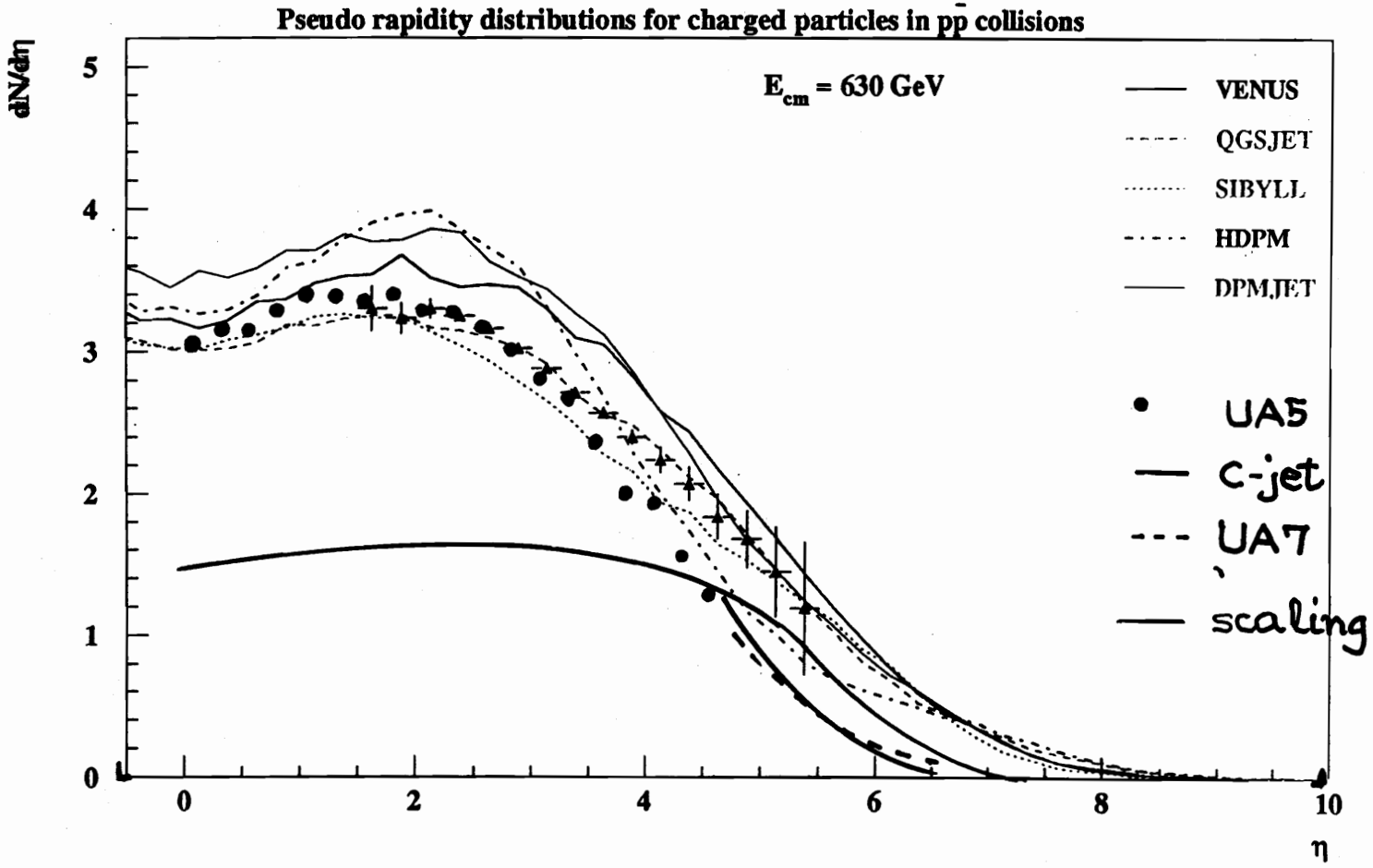
Pseudo rapidity distributions for charged particles in pp̄ collisions
dN/dη
E_cm = 630 GeV
VENUS
QGSJET
SIBYLL
HDPM
DPMJET
UA5
c-jet
UA7
scaling
0
1
2
3
4
5
0
2
4
6
8
10
η

Fig. 12

## CENTAURO - I

| | | |
|---|---|---|
| Primary Energy | 1,650 TeV | |
| Production Height | 50 m above the chamber<br>$\sim$ 500 g/cm$^2$ from the top of the atmosphere | *low* |
| Fireball Mass | 180 GeV/c$^2$ | |
| Multiplicity of secondaries | 100 | *large* |
| Multiplicity of $\pi^0$ and $e$ in the fireball | 0 | *!!!* |
| $< p_T >$ of secondaries | 1.8 GeV/c | *large* |

Fig. 13

CENTAURO I (1972)

Fig. 14

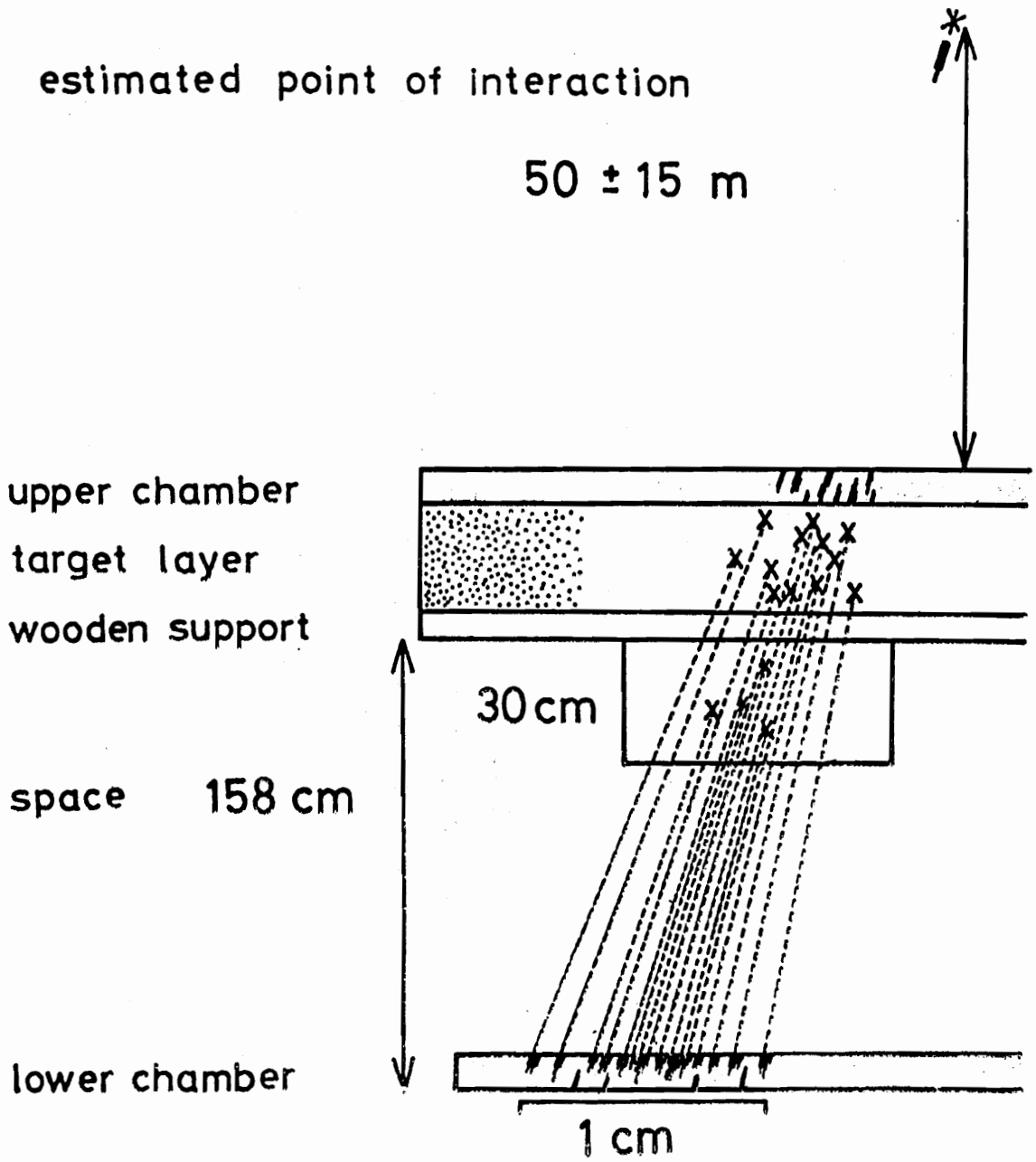


estimated hadron production ..... 74 hadrons

estimated secondary interactions ..... 3

observed in upper chamber ..... 1 e,γ
6 hadrons
($\Sigma E_\gamma = 28.1$ TeV)

observed in lower chamber ..... 43 hadrons
($\Sigma E_\gamma = 202.5$ TeV)

estimated penetrating through ..... 22 hadrons

**Event C22-Sxxx-I019**

**(1) Incident angle**

$\varphi$ ~~zenith~~ $\varphi$ $-20° \pm 10°$

$\theta$ ~~azimuth~~ $\theta$ $\tan\theta = 0.37$

**(2) Energy and Multiplicity of Showers, detected in the lower chamber.**

$\sum E_{ob} = 51.2$ **(TeV)**

$N_s = 13$ $(E_{ob} > 1$ **TeV**$)$

**(3) No shower found in the upper chamber.**

Fig. 15

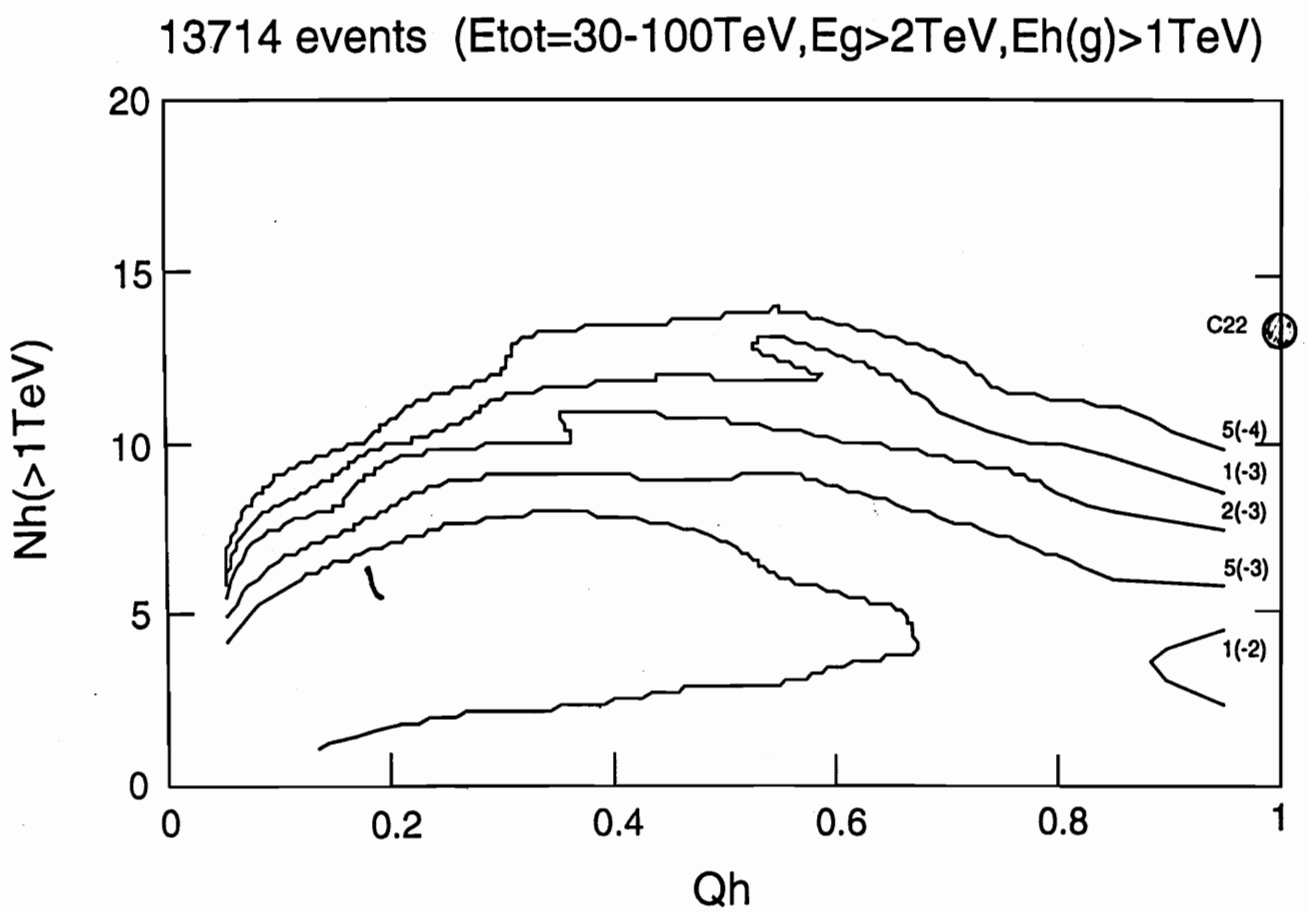
13714 events (Etot=30-100TeV,Eg>2TeV,Eh(g)>1TeV)
Nh(>1TeV)
Qh
0
5
10
15
20
0
0.2
0.4
0.6
0.8
1
C22
5(-4)
1(-3)
2(-3)
5(-3)
1(-2)

Fig. 16

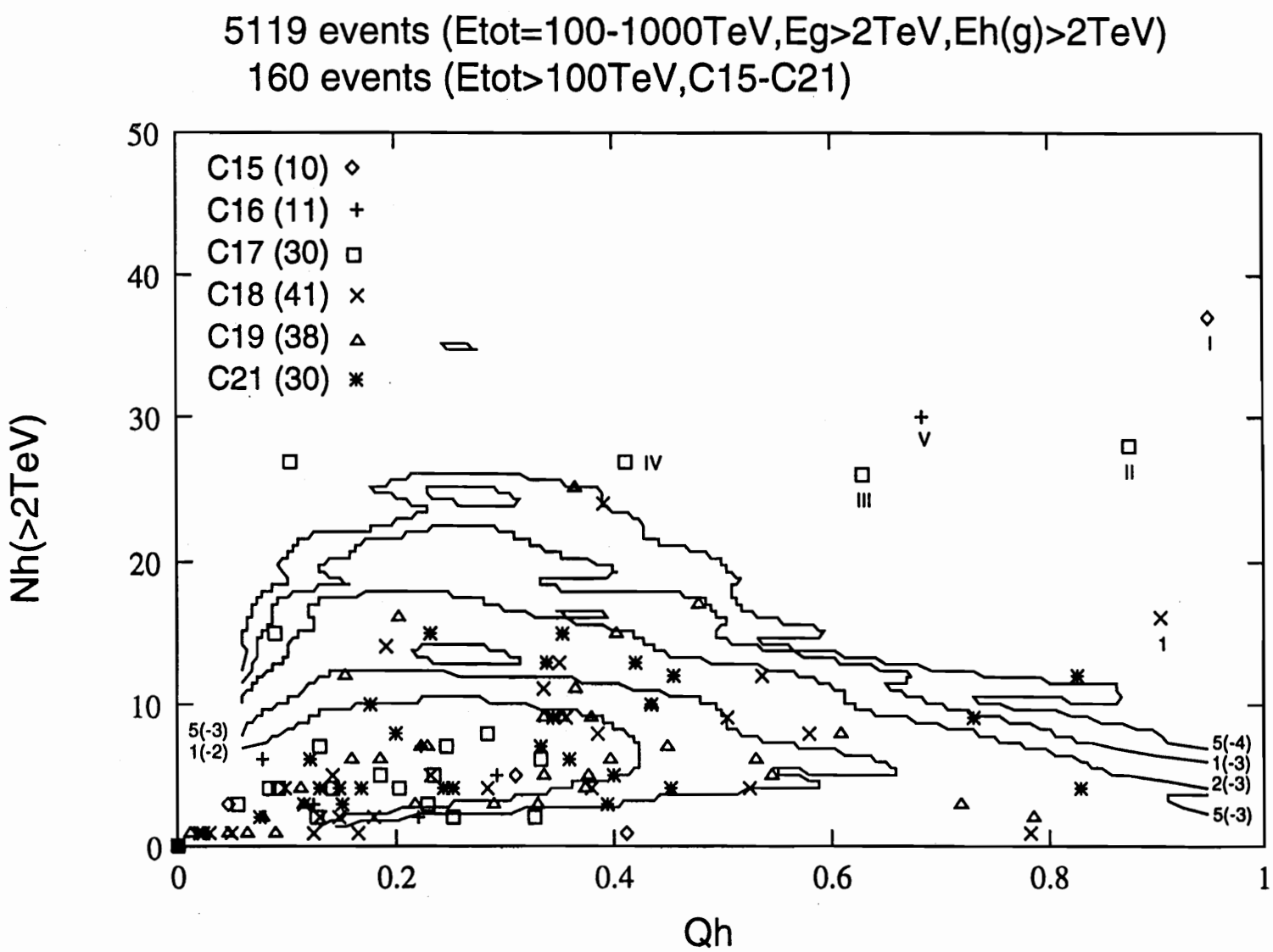
5119 events (Etot=100-1000TeV,Eg>2TeV,Eh(g)>2TeV)
160 events (Etot>100TeV,C15-C21)
C15 (10)
C16 (11)
C17 (30)
C18 (41)
C19 (38)
C21 (30)
Nh(>2TeV)
Qh
0
10
20
30
40
50
0.2
0.4
0.6
0.8
1
5(-3)
1(-2)
5(-4)
1(-3)
2(-3)
5(-3)
IV
V
I

Fig. 17

## Statistics of Centauro events

(i) among the observed families

Total exposure of two-storied chambers

$ST = 3.49 \times 10^2$ ($m^2 \cdot yr$)

| Event | $\sum E_{ob}$ (TeV) | $I(> \sum E_\gamma)$ ($/m^2 \cdot yr \cdot sr$) | Exp. No. of events | Prob. |
|---|---|---|---|---|
| Centauro I | 221.6 | 0.15 | $1.6 \times 10^2$ | $6.3 \times 10^{-3}$ |
| New event | 51.2 | 0.90 | $9.0 \times 10^2$ | $1.0 \times 10^{-3}$ |

(ii) among the simulated events

| Event | Prob. |
|---|---|
| Centauro I | $1.0 \times 10^{-5}$ |
| New event | ~~$2.0 \times 10^{-6}$~~ $8.0 \times 10^{-4}$ |

Fig. 18

## What is CENTAURO ?

| | $\sum E_{ob}$ (TeV) | $E_0$ (eV) | Obs. showers |
|---|---|---|---|
| **Centauro I** | 221.6 | $1 \times 10^{15}$ | 49 |
| **This event** | 51.2 | $3 \times 10^{14}$ | 13 |

**(1) Proposals**

**Primary origin** : **quark glob, etc.**

**Interaction origin** : **Centauro fireball, DCC, etc**

**(2) No evidence by accel. experiments.**

**UA1** **zero/$10^5$ inelastic events** ($\sqrt{s} = 900$ **GeV**)

**UA5** **a few/$10^3$ inelastic events** ($\sqrt{s} = 900$ **GeV**)

**FNAL** ~~no news~~ $10^{-6}$ ($\sqrt{s} = 1800$ **GeV**)

Fig. 19

(3) Simulations cannot produce Centauro event.

Centauro fire-ball

Cross section

(⇒ long m.f.p)

M. Tamada $\sigma_{cent} \nearrow$

C. Navia et al. $\sigma_{DCC} \longrightarrow$

(4) Assumptions of

normal nuclear interaction and

normal composition

cannot describe emulsion chamber data.

(⇒ rapid energy dissipation

( primaries or nuclear interactions ? ) )

(5) Genetic relation ?

"Exotic" event is produced by "exotic" particle,

which is produced in "very" high energy interaction.

(⇒ Centauro is produced in higher energies.)

Fig. 20

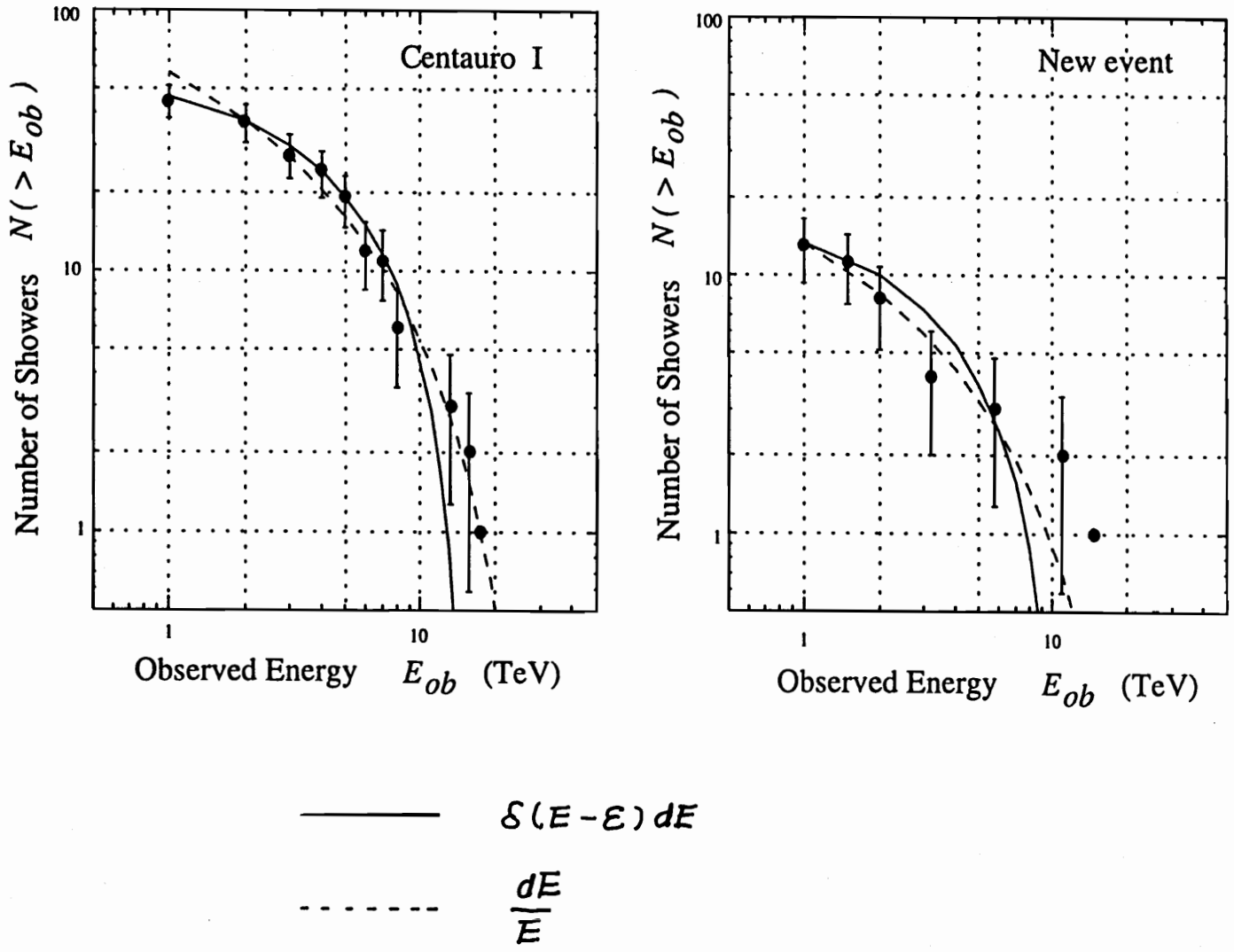
Centauro I
New event
Number of Showers $N(>E_{ob})$
Observed Energy $E_{ob}$ (TeV)
100
10
1
$\delta(E-\varepsilon)\,dE$
$\frac{dE}{E}$

Fig. 21

**Origin of Centauro events ?**

| Observation (Put 'may' always.) | Exotic primary | Exotic interaction |
|---|---|---|
| Model/Image | Fragmentation of nucleus $\propto \delta(E-\epsilon)dE$ | Multiple particle production $\propto dE/E$ |
| There is not production threshold. | ○ | |
| Produced particles : | | |
| Energy spectrum is consistent with $\delta(E-\epsilon)dE$. | | ○ |
| $p_T$ is large. | | ○ |
| Surviving particle is observed.* | | ○ |
| Incident particle is penetrative. | ○ | |
| Search by accelerator experiments fails. | ○ | |
| Simulation based on exotic interaction fails. | ○ | |
| Attenuation of cosmic rays is stronger than expected. | ○ | ○ |
| CosmoLEP observed high multiplicity muon events. ** | ○ | ○ |

* Centauro▽

** $\langle p_T \rangle$ large (??)