28

Universidade Católica de Petrópolis

www.ucp.br

ICEN-PS-01-16

Group of Theoretical Physics Paper Series ICEN-PS-01/16

Fermilab Library
0 1160 0088871 3

ICEN
Instituto de Ciências Exatas e Naturais

An evanescent-coupling plastic optical fibre refractometer & absorptionmeter based on surface light scattering

R. M. Ribeiro, J. L. P. Canedo , M. M. Werneck and L. R. Kawase

July 2001

FERMILAB
OCT 23 2001
LIBRARY

Universidade Católica de Petrópolis
Rua Barão do Amazonas, 124
CEP - 25.685-070 - Centro
Petrópolis - RJ - Brasil

Petrópolis

An evanescent-coupling plastic optical fibre refractometer & absorptionmeter based on surface light scattering

Ricardo M. Ribeiro,[1] João L. P. Canedo and Marcelo M. Werneck
Instrumentation & Photonics Laboratory
DEL/PEB/COPPE
Federal University of Rio de Janeiro - UFRJ
PO BOX 68564
21.945-970 Rio de Janeiro RJ Brasil
and
Liliana R. Kawase
Telecommunication Engineering Department
Fluminense Federal University - UFF
PO BOX 126.025
24.241-970 Niterói RJ Brasil

To the best of our knowledge, an evanescent-coupling plastic optical fibre refractometer & absorptionmeter, based on surface light scattering, is described for the first time. The sensing elements were manufactured by machining random roughness, using side-polishing technique. Coarser polishing leads to stronger surface light scattering, allowing measurements of refraction index smaller than the fibre cladding value. The same device also works as an absorptionmeter, where refractive and absorptive mechanisms may compete to each other.

Keywords: Fibre optic sensor, Plastic optical fibre, Evanescent-coupling, Surface light scattering, Refractometer, Absorptionmeter

[1] Also with Electric &Telecommunication Engineering Department of Catholic University of Petrópolis - UCP
25.685-070 Petrópolis RJ Brasil

1. Introduction

Plastic optical fibres (POFs) have been manufactured since the 60's and were primarily intended for application on illumination, imaging and decoration [1]. Continuous improvements on the POF transparency and bandwidth have being reached by many research groups showing its usefulness even for high-speed datacom [2]. A large amount of publications describing silica-based fibre optic sensors have been reported in the last thirty years [3], while the POF-based sensors have been much less exploited.

Plastic and silica fibre feature useful characteristics as: electromagnetic interference immunity, low weight, small volume, electrical isolation, etc. The main advantages of POFs, compared to silica fibres, are their easy handling, sturdy, safety, and potentially lower cost for handling tools, disposability, easy mass production of components and system.

In general, the evanescent-wave based fibre sensors [3] manufacturing requires mechanical polishing, thermal stretch or chemical etching by employing a hydrofluoridric acid (HF) solution for silica or potassium hydroxide (KOH) for plastic clad (PCS) fibres. Besides the time consumed for mechanical polishing of glass and the danger of working with HF or KOH, the stretched or etched silica fibre is very brittle, what is hard to handle and, thus limiting practical field applications.

In some applications one can use PCS fibres, as its primary jacket, and also its cladding, can be removed manually by a stripper. In this case, only the fibre core is used, but for this type of application the fibre (e.g. its core) is still brittle, thus reducing its flexibility to be bent. Besides, there are no passive components made from PCS fibres on the market.

As described above, one can use some techniques to expose the core (evanescent field) of silica optical fibres, in such manner that it leaves an essentially flat surface [3]. Even by employing the mechanical side-polishing, the fibre should be tapered with a high degree of flatness because of its small diameter core.

As reported in the early 80's [4], a number of experimental and theoretical investigations have been oriented to study the effect of micro-roughness adsorption on the optical properties of dielectric [5] and metallic [6] surfaces. More recently the use of holographic gratings with 2D random roughness in non-metallic surfaces, have been reported to measure lateral offset, phase gradient, or for cryptographic codes accomplishment [7]. The use of holographic sensors, with discrete optical components, to be used as gas sensors, has also been reported [8].

The commercially available step-index (SI) POFs [9], features a 10 μm thickness cladding, which can be easily removed by side-polished technique in order to expose the evanescent field [10,11]. In this paper, an evanescent-wave POF refractometer [10-13] and absorptionmeter, based on a randomly surface

scattering pattern [10,11] machined over the sensing element, is described for the first time.

2. Sensing Element Manufacturing

The sensing elements are manufactured by embedding a piece of POF slightly bent into a polyester resin block. This way, the POF remains tangential to one of the block faces. This face is polished up to the fibre diameter, reducing it to a half. This procedure was done using two different types of lapping film: one is a fine lapping film (FLF) of d = 12 μm grit-size, and the other is a course lapping film (CLF) of d = 42 μm [10,11].

Fig.1 shows some pictures of the POF sensing element just after the side-polishing process. In these pictures one can observe that the fibre is slightly bent and embedded on a < 100 mm length resin block, and also that the polished length is about 20 mm. On the top picture it is possible to observe another similar sensor element but with a *cuvette* bonded around its exposed core. The *cuvette* may accommodate the liquid solution that should be poured over the sensing element during the experiments. After the use of each sample, the liquid solution is removed by suction with a syringe, and a final evaporation is performed with compressed air jet. Measurements were done almost immediately after liquid solutions preparations.

3. Experimental Fibre Optic Apparatus

A conventional intensity-modulated fibre optic sensor circuit is shown in Fig.2. The light-emitting diode (LED@ 660nm, 40 nm bandwidth) launches ~ 350μW of light in a pigtailed POF. Light goes through the port 11 of a bi-directional POF coupler [14], and propagates through a mode–scrambler [10,11,15]. The coupler splits the light in two ports. At port 21, the side-polished POF (sensing element) was connected as previously described.

Port 22 acts as a reference arm. The signal (I_1) and the reference light (I_2) are detected by silicon photodiodes PD_1 and PD_2, respectively. The generated electrical signals were amplified and displayed on a calibrated optical power meter that also performs the normalisation ratio I_1/I_2 All of the measurements were performed at 25.0 ± 0.3°C (room temperature).

4. Results and Discussions

4(a). Characterisation of the device as a refractometer

In order to characterise the device as a refractometer, several sucrose solutions, at different concentrations, were mixed. The refraction index for each solution was independently measured by means of an Abbè refractometer. The depth level of the liquid under test should be considered unlimited above the surface of the sensing POF.

All experiments showed an immediate response just after the liquid was poured in the *cuvette*. The optical response remains stable for each solution under test. As soon as the liquid solution was completely removed from the sample, the optical signal returned to its original level. No long-term measurement was performed, but in the used time scale (minutes) no significant behaviour was observed, which could be attributed to adsorption and/or molecule diffusion dynamic process. Similar type kind of behaviour was observed in organic vapour detection [8].

Fig.3(a) shows the normalised plot of I_1/I_2 for the refractometer with the FLF side-polished sensing POF as the refraction index increases. The plot corroborates the result already reported in the literature [12,13]. The output signal remains unchanged until the refraction index of the sucrose solution matches the POF cladding value at n = 1.417. For n > 1.417, the output signal drops linearly with sensitivity of -36.3 dB/RIU. The measured resolution was better than 0.005

RIU. Fig.3(b) shows the normalised plot of I_1/I_2 for the CLF side-polished sensing POF as the refraction index increases. A different optical response was observed when compared with Fig.3(a). From n = 1.333 (pure water) to n = 1.417, the output signal increases with a sensitivity of +7.5 dB/RIU. On the other hand, for n > 1.417, a qualitative similar result is observed. Nevertheless, a sensitivity of -31.0 dB/RIU is now achieved, which is lower than that for the FLF sensing element.

Over a dozen sensing POF tapers were manufactured and characterised, all of them giving similar results described above.

The roughness surface of the sensing POF scatters the guided light probe, which strikes the polymer/air boundary into the radiation modes. The scattering is likely to be the Mie mechanism [16]. In our case this is due to the fact that, the roughness of the sensing POF taper in both cases (FLF and CLF) has a typical size larger than the wavelength of the probe light (0.66 μm). Once the sucrose solution is poured, a decrease of the refraction index depth modulation on the polymer/air interface is likely to occur. Therefore, the scattering strength is also reduced. The initially radiated light (leaky modes) intensity is now forward-guided (guided modes) through the POF, providing an enhancement of the output signal as the analysed refractive index also increases.

Another way to explain the sensing behaviour [17] described previously, is considering the sensing element as a transversal D-shaped waveguide. The structure is composed by a flat surface in contact with the measured element,

followed by a layer of a random diffraction grating. This grating is composed by grooves of the same grain depth of the used lapping film. The gap between the waveguide and the diffraction is null. The propagation modes under the fibre critical angle, which reaches the hypothetical flat surface, are diffracted at random directions to the fibre outside, losing its transmission characteristics. Occasionally, few modes can be coupled back to the waveguide. When a perfect index matching occurs, the propagation modes lose their transmission characteristics by ordinary refraction, and no longer by diffraction.

The propagation modes above the critical angle are totally reflected, and no lost of energy occurs. Nevertheless, the grating will diffract the evanescent mode of each incidental mode, and part of the light will be lost toward the outside. However, when the refraction index is matched, the grating vanishes, and the evanescent mode will no longer be diffracted. As a result, no more optical power lost will occur. If the refraction index under test (RIUT) continues to grow, optical attenuation will occur due to evanescent mode detachment, as the basic condition to guidance is lost.

Organic vapours detection technique was previously reported [8]. This case is based on the interaction with thin polymer films, known to interact with organic vapours via adsorption and/or diffusion. It is also possible to measure gases (satured vapours) by monitoring the 1st order diffraction (low efficiency) of a holographic grating written on a polymer film. Another physical mechanism, as proposed by such article, is the possible formation of a liquid thin layer of condensed gas that fills up the written diffraction grating grooves.

For n > 1.417 the observed effect for FLF is likely to remain even for the CLF sensing POF. But, another mechanism arises for n > 1.417, which is similar to the previously reported for n < 1.417. We believe this second mechanism is due to the random pattern grooves (roughness) in the POF surface. Both mechanisms act in opposition to each other leading to a slightly smaller derivative (sensitivity) of the output signal (see Fig 3. (b)).

In order to compare both sensing elements it is necessary to subtract the measured mechanisms sensitivity, when using the CLF sensing POF. To obtain the subtraction of +7.5 dB/RIU from –31.0 dB/RIU, one has to subtract their equivalent angular coefficients, and convert the result to the dB/RIU unity. This mathematical procedure leads to an ultimate value of –39.0 dB/RIU. Comparing this value with –36.3 dB/RIU, a difference of 2.7 dB/RIU is observed, which can be slightly diminished by improving the numerical calculation during the whole procedure. Therefore, these results explain, only in a qualitative manner, the proposed model for the observed measurements.

To the best of our knowledge, this is the first description of frustrated surface scattering on optical fibre evanescent mode sensors. However the surface scattering phenomenon itself is very well known because it causes attenuation that is undesirable for silica fibres intended for Telecom applications. We believe this is due to the fact that silica fibre evanescent sensors are obtained by HF chemical etching, thermal stretch or side-polishing techniques. In the last case, lapping films are used, not only on singlemode fibres, but also on multimode fibres. In

both cases, the used lapping film is very fine (< 1 μm) if compared to the ones used on the reported POF sensors.

By scratching the POF surface in a random way, it is possible to monitor the refraction index smaller than the fibre cladding. Considering the full range of the refraction index, the optical signal does not change in a monotonically way, inducing an ambiguity in the measurement. It should be expected that, after suitable averaging procedures, the present refractometer could feature an improved resolution.

4(b). Characterisation of the device as an absorptionmeter

Now, in order to characterise the device as an absorptionmeter, several (violet) dye-water solutions at different concentrations (%) were mixed. Analogously, as in the previous case, the depth level of the dye-solution under test (DSUT) should be considered unlimited above the surface of the sensing POF.

The experimental results show an immediate and stable response related to DSUT poured into the measurement system. The optical response returns to its original level as soon as the DSUT is removed, and the receptacle is drained with compressed air. No long-term experiment was run, but in the present experiments no significant time-scale (minutes) occurrences were observed, which could be related to adsorption and/or diffusion molecules dynamic processes, as previously reported in organic vapours detection [8].

Fig.4 shows the measurements performed on the Abbè refractometer of the DSUT refractive index as function of the relative percentage (%) of the dye concentration. It shows a narrow range from 1.333 to 1.336 as measured for the DSUT refraction index. Some plot discontinuities were observed. We believe that such discontinuities may be an artifact that arises from errors in the measurements of the refraction index and/or the dye mixing concentration of he DSUT.

Fig.5 shows the normalised plot of I_1/I_2 for the absorptionmeter for (a) FLF and (b) CLF side-polished POF as the absorption coefficient (or % of dye concentration) increases. It shows the sensitivity characterization of the evanescent-wave POF sensor operating as an absorptionmeter.

From Fig.5 it is possible to observe two distinct derivatives between the plot 5 (a) and 5 (b). Up to ~ 8% of dye concentration, the slope is smooth and essentially the same for both CLF and FLF sensing POF. For higher concentrations from value 8% until 17%, the slope increases for both sensing POF, but the optical signal drop is much higher for the FLF fibre (d = 12 μm), when compared with the CLF (d = 42 μm). The physical origin of such derivative changes is presently unknown. One possible explanation may be the error measurements in the DSUT percentage concentration (%) as previously pointed out. Another possibility could be the artifacts due to the adsorption on the polymer wall or micro-crystallite formation. The solution for the latter may be the treatment with ultrasound during and after the dissolution processes.

By increasing the relative concentration (%) of the dye, the transmitted signal drops for both CLF and FLF side-polished POF sensing element concerning only values higher than 8%. In the previous case, where the device was characterised as a refractometer, transparent liquid solutions were used to guarantee only refractive effects, as absorptive effects could be neglected. In the present case, aqueous solution was used with dye mixed. This way, a much lower refraction index variation (see Fig.4) was obtained, but non-transparent liquid solutions.

Fig.3 (a) shows that there is no significant optical signal variation for the same range of refractive index (1.333-1.336), when FLF sensing POF element is used. But when the FLF sensing element is used for the absorptionmeter, the optical signal is now attenuated, while the dye concentration (%) is increased. This mechanism is due to the evanescent field, which is also attenuated due to its interaction with the DSUT. This way, in the present case, there is no competition between the absorptive and refractive mechanisms.

Fig.3 (b) shows measurement results for the CLF sensing element where the optical signal variation is of + 0.0225 dB (+ 0.5%), considering 0.003 RIU the maximum variation of the refractive index (1.333-1336). In Fig.5, the plot 5 (b) for the CLF sensing POF shows a lower derivative than the plot 5 (a) for the FLF sensing POF. It is likely to be occurring a competition as well as some mixing effects between refractive and absorptive mechanisms when someone uses the CLF sensing POF (Fig.5(b)). Qualitatively speaking, while the absorptive effect pushes the optical response of the absorptionmeter to a stronger derivative (as in

Fig. 5 (a)). the refractive effect reciprocally pulls it to a weaker derivative as demonstrated at Fig.3 (b) and Fig. 5 (b).

5. Suggestions for future works

The POF technology intended for pharmaceutical and food industries, as a chemical/biological evanescent-wave sensor, is very promising. A drawback of an evanescent-wave POF sensor is its susceptibility to chemical attack by acetone, HSO_4, $CHCl_3$ and other organic solvents. A possible solution may be the coating of the sensitive POF surface with a thin dielectric or thin metallic film. In the latter case, a sensor based on surface plasmon resonance might be achieved [18]. Extrinsic vapour sensing with polymer technology has been described as the recently reported gasoline leakage detector [19]. An extension of the present work, but aiming to perform intrinsic gas sensing is under development [20,21] in our laboratory and will be the subject of future publications.

6. Summary

An intrinsic sensing mechanism relying on the surface light scattering due to the random pattern grooves machined in the POF surface has been demonstrated. This way, an evanescent-coupling POF refractometer as well as an absorptionmeter for liquid solutions is reported. Two scaled size-dimensions d for the randomly pattern grooves were investigated:

a) d = 12 μm (FLF sensing POF)

Measurements covering the 1.42-1.48 RIU range with –36.3 dB/RIU sensitivity and 0.005 RIU resolution were achieved for the POF-refractometer. Their optical response as an absorptionmeter is of absorptive nature only and is stronger than that of the CLF sensing element.

b) d = 42 μm (CLF sensing POF)

Now, measurements covering the 1.33-1.42 RIU range could be done with +7.5 dB/RIU sensitivity the 1.42-1.48 range with –31.0 dB/RIU sensitivity. Their optical response as an absorptionmeter are simultaneously of absorptive and refractive nature and they are weaker than that of the FLF sensing element.

Acknowledgements

We would like to thank FAPERJ and CNPq/PADCT for the financial support and Mitsubishi Rayon Co. for the POFs donation.

References

1 J. Marcou (ed.). Plastic Optical Fibers: Practical Applications, Club des Fibres Optiques Plastiques. Wiley & Sons, France, 1997.

2 Y. Koike. T. Ishigure and E. Nihei, High bandwidth graded-index polymer optical fiber. J. of Lightwave Techn., **13**, 7 (1995) 1475-1489.

3 B. Culshaw & J. Dakin (ed.), Optical Fiber Sensor, Artech House, London, 1989 and 1997.

4 A. M. Brodskii and M. I. Urbakh, The effect of the microscopic structure of metallic surfaces on their optical properties, Sov. Phys. Usp. **25**, 11 (1982) 810-831.

5 K. Tiefenthaler and W. Lukosz, Integrated optical humidity and gas sensors, 2nd International Conference on Optical Fiber Sensors, Berlin (1984) 215-218.

6 Douglas Christensen and David Fowers, The effects of film roughness on surface plasmon resonance sensors: FDTD modelling, SPIE vol. 2293 (1994) 32-39.

7 J. Ojeda-Castañeda and Angel Sauceda, Random gratings as correlator sensors, Opt. Lett. **22**, 5 (1997) 257-258.

8 A. Nicolai, E. M. El Joudi, P. Dreb, R. Podgorsek, K. Pfeiffer and H. Franke, Optical detection of organic vapours using gratings in photopolymers, SPIE Vol. **3135** (1997) 160-168.

9 Eskamega - Mitsubishi Rayon – www.mrc.co.jp.

10 R. M. Ribeiro, J. Canedo, A. P. Ferreira, M. M. Werneck and L. R. Kawase, Development of plastic optical fibers in Brazil: Passive devices for Telecom, Sensing and Engineering education, The Int. POF Techn. Conf., POF'2000, Cambridge, MT, USA, Sept. 5, 157-161, 2000.

11 L.R. Kawase, J.C. dos Santos, R.M. Ribeiro, J. Canedo and M.M. Werneck, State-of-Art of POF in Brazil: Passive Devices, Sensors, and Telecommunication Applications, invited paper, Asia-Pacific Polymer Optical Fibre Workshop", School of Electrical Engineering & Telecommunications, The University of New South Wales, Sydney, Australia, 4-5, January, 60-64, 2001.

12 J. J. Bayle and J. Mareo, Plastic optical fibre sensor of refractive index based on evanescent field, Fifth Int. Conf. on Plastic Optical Fibre & Application, POF'96, Paris, France, 220-227, 1996.

13 G. Garitaonaindía, J. Zubia, U. Irusta, J. Arrúe, and J. Miskowicz, Passive device based on plastic optical fibre to determine the index of refraction of liquids, Seventh Int. Plastic Optical Fibres Conf.'98, POF'98, Berlin, Germany, 178-184, 1998.

14 L. R. Kawase, J. C. dos Santos, L. P. C. da Silva, R. M. Ribeiro, J. Canedo, and M. M. Werneck, Comparison among different fabrication techniques for POF couplers', The Int. POF Techn. Conf., POF'2000, Cambridge, MT, USA, Sept. 5, 68-71, 2000.

15 R. Attia and J. Marcou. Mode scrambler for polymer optical fibers, Opt. Eng., 39, 1, (2000) 299-303.

16 J. Powers, An Introduction to Fiber Optic Systems, McGraw-Hill International Editions, Singapore, 2nd edn., 1999, pp. 37-40.

17 Ralf Bräuer and Olof Bryngdahl, From evanescent waves to specified diffraction orders, Opt. Lett. 22, 11 (1997) 754-756.

18 R.M. Ribeiro, J.L.P. Canedo, M.M. Werneck and L.R. Kawase, Surface Plasmon-like Effect on POF Sensors for Refractive Index Measurements, submitted to the 10th International Plastic Optical Fibres Conference 2001 (POF 2001), Amsterdam, September 27-30, The Netherlands, 2001.

19 Masayuki Morisawa, Kohji Uchiyama, Gargi Vishnoi, Shinzo Muto, Chan Xin Liang, Hideaki Machida and Koichi Kiso, Improvement of sensitivity in plastic optical fiber gasoline leakage sensors, SPIE Conference on Chemical, Biochemical and Environmental Sensors X, Boston, Massachusetts, November, vol. 3540, 175-182, 1998.

20 R.M. Ribeiro, J.L.P. Canedo, M.M. Werneck and L.R. Kawase, An Intrinsic POF Sensor to Gas Discrimination, submitted to the 10th International Plastic Optical Fibres Conference 2001 (POF 2001), Amsterdam. September 27-30, The Netherlands, 2001.

21 M.M. Werneck, J.L.P. Canedo and R.M. Ribeiro, An intrinsic N_2O gas sensor based on polymeric optical fibre technology, submitted to the 23rd Annual International Conference of the IEEE Engineering in Medicine and Biology Society, Istambul, October, Turkey, 2001.

Biographies

Ricardo M. Ribeiro holds a B.Sc. degree in Physics from the Federal University of Rio de Janeiro (UFRJ), Rio de Janeiro, Brazil in 1985, a M.Sc. and D.Sc. degrees in Physics (Photonics) from the Catholic University of Rio de Janeiro (Brazil) in 1989 and 1995, respectively. In 1998 he joined the Instrumentation and Photonics Laboratory of the Federal University of Rio de Janeiro where he performs research and development works on fibreoptic devices and systems. In 2001 he also joined the Electric & Telecommunication Engineering Department of the Catholic University of Petrópolis, Petrópolis, Brazil. His research interests include photonic materials, all-optical devices and systems for Telecommunications and Sensing. He currently holds three patents and has authored over twenty-five scientific international papers.

João L. P. Canedo holds the B.Sc. degree in Medicine from the Medical School of the Federal University of Rio de Janeiro in 1985. He is an expert in Anaesthesia by Government's Worker Hospital in 1990. He is currently pursuing the M.Sc. degree in Biomedical Engineering at Federal University of Rio de Janeiro (Brazil). His research interests include: optical biosensors and fibreoptic sensing in the medium infrared technology.

Marcelo M. Werneck holds the BSc. degree in Electronic Engineering by the Pontifícia Universidade Católica of Rio de Janeiro (PUC-RJ) in 1975. His MSc degree was obtained from the Biomedical Engineering Program (PEB-COPPE) at the Federal University of Rio de Janeiro (UFRJ) in 1977 where he is a lecturer and

researcher since 1978. His PhD title was obtained from the University of Sussex (U.K.) on Biomedical Engineering in 1985. At the moment he is the co-ordinator of the Photonics Laboratory at the Biomedical Engineering Program (PEB-COPPE) of the Federal University of Rio de Janeiro. He centres his research in fibre optic sensors and biomedical instrumentation.

Liliana R. Kawase holds a B.Sc. degree in Electronic Engineering from the Federal University of Rio de Janeiro (UFRJ), Rio de Janeiro, Brazil in 1988, a M.Sc. and DSc. Degrees in Telecommunication Engineering from the Catholic University of Rio de Janeiro (PUC-Rio) in 1990 and 1997, respectively.
From 1988 to 1995 she worked at the Brazilian Research Centre for Electrical Energy (CEPEL). While at CEPEL, her main research topic was optical fibre sensors. She is an Associate Professor at Fluminense Federal University (UFF, Niterói, Brazil) since 1995. She is currently a Visiting Researcher in the High Power Systems and Automation Laboratory at University of São Paulo. Her current research interests include Bragg grating sensors, polymeric optical fibre (POF) sensors, and POF devices.

Figure caption

Fig.1 The POF sensor element manufactured by means of the side-polishing technique on a resin block embedded fibre. (a) The sensor element. (b) The sensor element with a bonded *cuvette* around the exposed core.

Fig.2. The experimental all-fibreoptic apparatus.

Fig.3. Plot of the normalised optical signal output $|I_1/I_1|$ (arbitrary units) for the device as a refractometer as function of the refraction index for (a) fine (FLF)■ and (b) course polished surface (CLF) ●.

Fig.4. Plot of the refraction index for the violet dye-water solutions (DSUT) as function of concentration (%).

Fig.5. Plot of the normalised optical signal output $|I_1/I_1|$ (arbitrary units) for the device as an absorptionmeter as function of the violet dye-water (DSUT) concentration (%) for (a) fine (FLF) ■ and (b) course polished surface (CLF) ●.

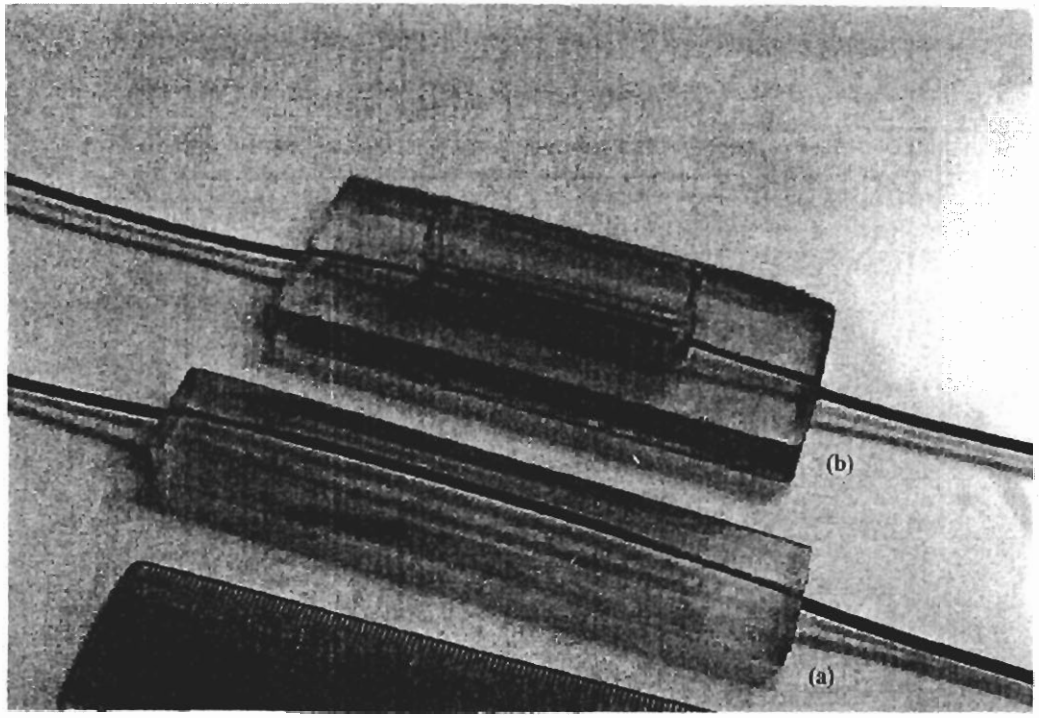

Fig.1

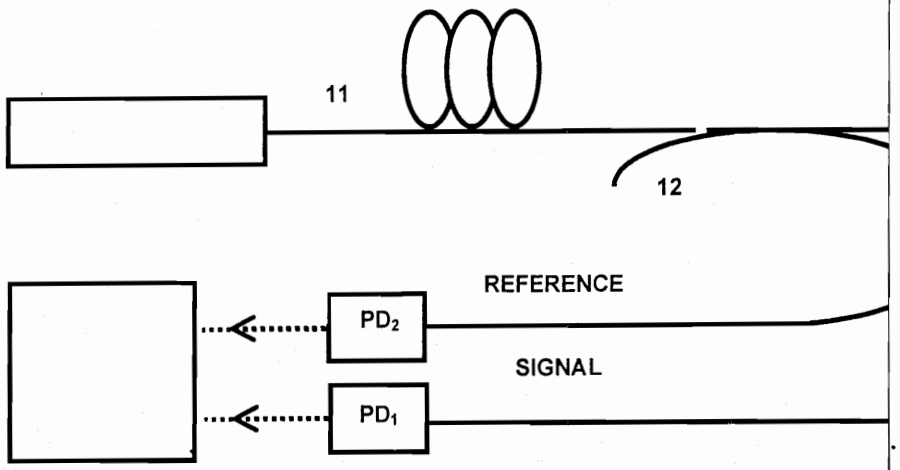
11
12
REFERENCE
PD2
SIGNAL
PD1

Fig.2

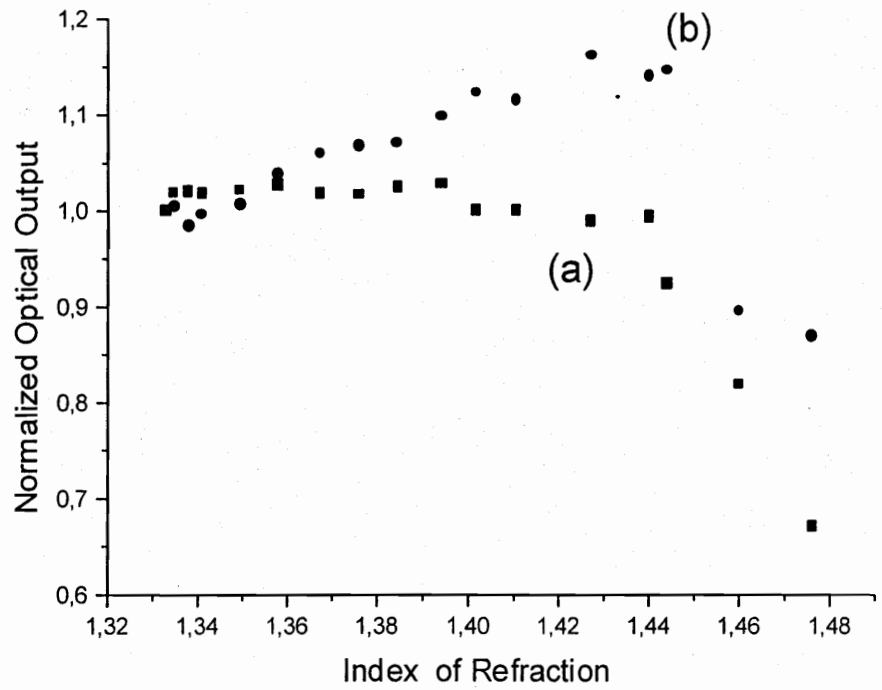
(b)
(a)
Normalized Optical Output
Index of Refraction
1,2
1,1
1,0
0,9
0,8
0,7
0,6
1,32
1,34
1,36
1,38
1,40
1,42
1,44
1,46
1,48

Fig.3

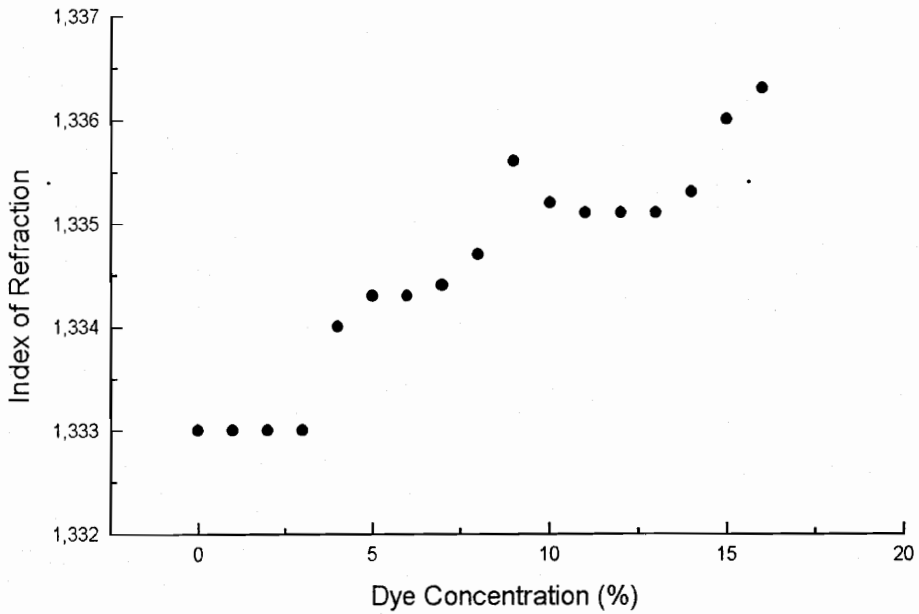
1,337
1,336
1,335
1,334
1,333
1,332
Index of Refraction
0
5
10
15
20
Dye Concentration (%)

Fig.4

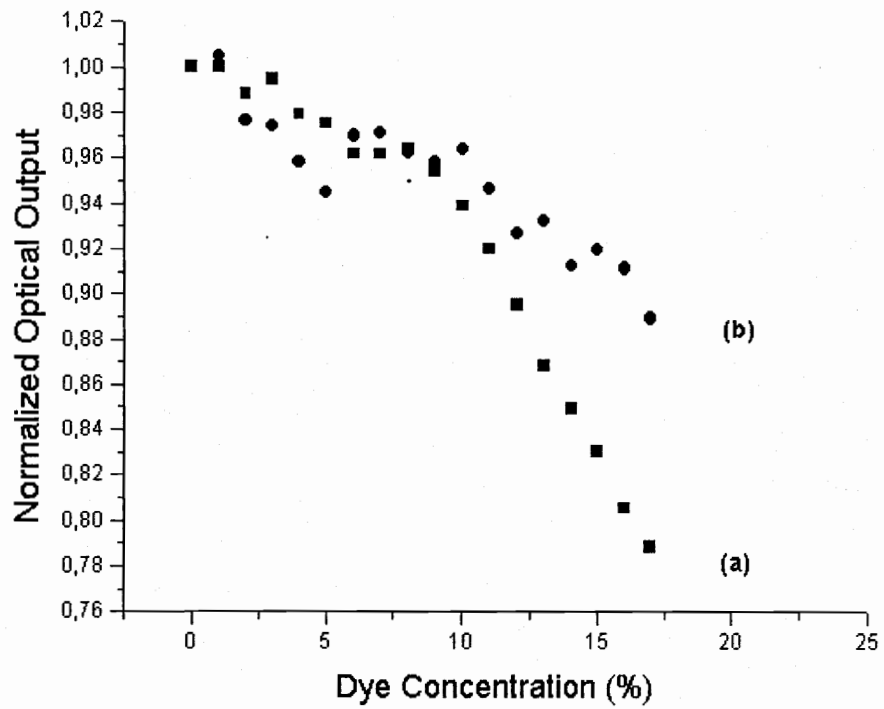
1,02
1,00
0,98
0,96
0,94
0,92
0,90
0,88
0,86
0,84
0,82
0,80
0,78
0,76
Normalized Optical Output
(b)
(a)
0
5
10
15
20
25
Dye Concentration (%)

Fig.5

The Paper Series is a preprint series of unpublished works with original results.

Other publications:
Lecture Note Series
Monograph Series

Requests for copies of these publications should be addressed to:

Universidade Católica de Petrópolis
Grupo de Física Teórica
Rua Barão de Amazonas, 124
25.685-070 Relógio das Flores
Petrópolis – RJ – Brazil
public@gft.ucp.br
http://gft.ucp.br