GRAND - 95-124

Fermilab Library
0 1160 0048450 5

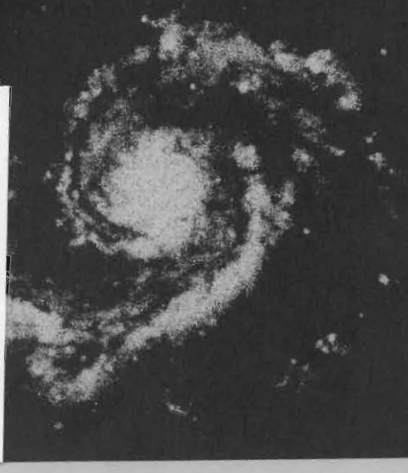

Astrophysics

Physics Department
University of Notre Dame

GRAND-95-124

FERMILAB
SEP 20 1995
LIBRARY

A New Variable, H_h, to Use in Measuring the Chemical Composition of Cosmic Ray Primaries

John Poirier, Pawel Fischer, Joseph Gress, Younan Lu, and Adam Trzupek.

NAME	I.D. No.	M.S.

RETURN TO FERMILAB LIBRARY

to be published in the Proc. of the 24th Int. Cosmic Ray Conf., Rome, 1995.

Notre Dame, Indiana 46556, USA

Work supported in part by the National Science Foundation

A New Variable, H_h, to Use in Measuring the Chemical Composition of Cosmic Ray Primaries

John Poirier[1], Pawel Fischer[2], Joseph Gress[3], Younan Lu[4], Adam Trzupek[5]
[1] *Physics Dept., University of Notre Dame, Notre Dame IN 46556 USA*
[2] *Physics Dept., University of Lodz, PL-90-236 Lodz, Poland*
[3] *Physics Dept., Moorhead State University, Moorhead MN 56561 USA*
[4] *Dallas Electrospace, 1301 E. Collins Blvd, Richardson TX 75083 USA*
[5] *Physics Dept., Krakow University, PL-30-055 Krakow, Poland*

Abstract

A method is described which yields added information about the chemical composition of primary cosmic rays above 100 TeV. A new variable, H_h, is related to the **h**eight of the ***h**adronic* part of a shower before it becomes electromagnetic; the secondary muons which reach detection level probe the hadronic part. The method utilizes tracking chambers (PWCs) to measure the angle, position, and identity of the secondary cosmic rays at detection level. The cross section of iron primaries is larger than protons causing iron-air interactions to occur higher in the atmosphere; thus their secondary muons from mesonic decays come from higher altitudes. Monte Carlo simulations show that, relative to proton primaries, the secondary muons from iron: 1) originate higher in the atmosphere; and, at detection level, are: 2) more numerous in number relative to the electrons, and 3) spread further from the shower core.

1 Introduction

The chemical composition of cosmic ray primaries has been studied extensively with mixed success. Some of the motivation of this search is to understand the "knee" of the cosmic ray energy spectrum, and to distinguish methods of acceleration which dominate at differing energies [G92]. Composition can discriminate among models and give clues as to the place of origin and method of acceleration of primary cosmic rays. Direct methods have been employed using emulsion and counter techniques in satellites and balloons; the results are good but limited to energies <100 TeV due to weight limitations. Extending these composition measurements to higher energies by employing various features of air shower arrays at ground level have achieved varying degrees of success. We suggest an extension of these methods which employs a new, independent variable that is sensitive to the chemical composition. Two additional variables sensitive to composition coupled with the variable H_h will allow a more reliable measurement of the chemical composition.

2 Discussion of the method

The new variable suggested as a discriminant of chemical composition is the muon's virtual height-of-origin. This height is obtained by a) identifying which tracks are muon tracks, b) obtaining the core axis of the shower, c) measuring the angle-from-core for each muon track, and d) extrapolating back (up) each muon track until it intersects the core axis using its distance and angle from the core. The height of this intersection is the apparent height from which the muon originated. The mean value of this height for a shower is H_h. The virtual height-of-origin for the muons is measured for each shower utilizing tracking detectors, like proportional wire chambers, deployed to detect cosmic ray showers [P91]. These detectors can be configured in such a way to measure the angle as well as the identity

of the secondary particles at detection level; namely, they can distinguish, on a track-by-track basis, which tracks are muons [G91]. Muon angles are scattered much less than the electrons and hence the angular information of the muons is considerably greater [K91, M87, T91]. Specifically, they can be extrapolated backward in time (upward in space) to determine the virtual height in the atmosphere where they originated. This height is related to the maximum of the hadronic part of the shower which occurs well above the electron maximum from the subsequent electromagnetic shower.

The dependence of the virtual height of the muon on the chemical composition of the primary is qualitatively understood by comparing the average properties of proton primaries to primaries of iron nuclei. The comparison is made at energies such that each primary yields the same number of secondary charged particles at detection level. If the primary cosmic ray is heavy (iron), then its energy is greater and its interaction cross section is larger than a proton; thus it will interact higher (sooner) in the atmosphere than the proton primary. Thus the pions from an iron primary will decay to muons higher in the atmosphere. The difference in apparent height of the muons for protons and iron nuclei is studied with a Monte Carlo simulation.

As well, there are other differences related to the identity of the cosmic ray primary. Comparing iron to proton primaries, iron's larger multiplicity produces more pions of lower energy in rarer atmosphere which favors their decays to muons rather than interacting. Thus iron primaries yield larger numbers of muons at detection level. The higher height of the muons from iron primaries yields muons which then extend to larger radii. By deploying the muon detection uniformly throughout the array, the muon density and muon-to-electron ratio can be obtained, each as a function of radius; the precision will be limited by the statistics of the muons which are detected. By adding a powerful new and independent variable to these two additional variables, and using them jointly for each shower, the chemical composition above 100 TeV can be obtained with greater precision.

3 Calculations

Monte Carlo calculations have been performed using SHOWERSIM software [W85] at the higher energies combined with EGS4 software [N85] to handle the low energy electromagnetic part of the shower [M91]. The same spectrum of primary energy was used for both the incident primary protons and the iron nuclei with a differential spectral index of - 2.7 from 30 TeV to 3 000 TeV; - 3.2 at higher energies. The primary cosmic rays were incident on the air at vertical incidence and the secondary particles were followed to sea level. There were 118 800 showers generated for proton primaries; 13 000 showers with iron primaries. A cut in the number of detected charged particles at ground level is made between 21 000 and 39 000 (that is, 30 000 +/- 30 percent). In this cut there are 3 000 showers from proton primaries and 100 showers from iron primaries. By using this cut, protons and iron are compared for those showers which give the same numbers of charged particles at sea level. These calculations were performed to give a quantitative measure of the sensitivity of the extrapolated height to the chemical composition of the primary; no particular significance is to be placed on these specific initial values of the parameters.

4 Results

Table 1 summarizes the results for proton primaries; Table 2 is for iron nuclei primaries at radial intervals shown in column "R." N_e, N_μ , and H_h are, respectively, the average number of electrons and muons per shower which reach detection level and the mean extrapolated height of the muons in kilometers. The mean primary energy which yielded 30 000 charged secondaries at detection level was 231 TeV for primary protons and 517 TeV

for iron. Fig. 1 is a graph of the mean height of muons in kilometers obtained from proton showers and from iron initiated showers as a function of log-R; R is the distance of the detected muon from the core of the shower. There is a small positive slope to the lines drawn through the data; that is, muons from larger radii tend, on average, to come from higher altitudes. Independent of radius, H_h for iron is 2.2 km higher than that for protons.

To optimize primary particle identification, we combine the three discriminants. Eq. 1 is their combined chi-square for a proton hypothesis fit to a single shower:

$$\chi^2_p = [\Delta h / \sigma_h]^2 + [\Delta ratio / \sigma_{ratio}]^2 + [\Delta r / \sigma_r]^2 \qquad (1)$$

where Δh is the difference between the experimental average height obtained from the identified muons of a shower and the MC calculated overall average height; $\Delta ratio$ is the difference between the experimentally measured ratio of muons/electrons in a shower and its calculated mean; and Δr is the difference between the experimentally measured mean radius of the charged particles in a shower and its calculated mean; in all three cases the calculation is for proton primaries. The three sigmas are the rms deviations of these three differences as obtained in the same calculation. A similar expression gives the chi-square for the hypothesis of a heavy primary when using the values for the means and sigmas of these three variables for iron primaries. Proton data fit to proton hypothesis give a mean chi-square of 3.0 (similarly for iron); based on these simulations, the chi-square probability for data fit to the wrong hypothesis is < 0.002.

The distribution of overall chi-square for simulated extensive air showers fits to the iron and proton hypotheses are given in Fig. 2. The left figure is 100% iron data fit to the proton hypothesis (plotted up) and the iron (down) for 54 events; the right figure is 100% protons (70 events). The middle figure is a sum of both data. The iron data are crosshatched (since this is MC generated data, each event has a known origin). All showers with chi-square >15 are fits to an incorrect hypothesis; since a significant fraction are in this category, this cut provides excellent separation between light and heavy primaries. A realistic situation involves a distribution of nuclei from protons to (and beyond) iron. With ample statistics and additional calculations it should be possible to obtain the fraction of more mass groups: for example, light, medium, and heavy. Data over a range of energies will allow a measurement of these fractions as a function of primary energy. The range of energies covered is 100 to 10 000 TeV; the energy of the knee in the cosmic ray spectrum is well within this energy range.

The average precision of a muon's angular determination from the proportional wire detector arrangement of GRAND is 0.26 deg in each of two orthogonal projections. In a configuration of 100 m x 100 m of detector deployment, the outer detectors would be 50 to 100 m from the core of a shower. At an average height of 4.5 km, the height resolution is 3 km for the two projections of the track. To distinguish a proton shower from an iron initiated shower to a precision of 3 sigma would require 20 detected muons to achieve a resolution in height of 0.7 km in a single shower. The actual chemical composition is an unknown mixture of all species. By looking at a large number of showers, the chemical composition can be measured versus the number of detected secondaries. A measurement of the fraction of light component (protons) versus heavy component (iron) looks feasible since their atomic number is so disparate; additional information for intermediate groups of atomic numbers is possible. Once the chemical composition is obtained, the energy of the various components can then be calculated.

Thanks are extended to John Linsley for helpful discussions. This research is supported in part by grants from the University of Notre Dame and from Omnibyte Corp.

References

[G91] Gress, J. etal, *Nucl .Instrum. and Methods* ***A 302***, 368.
[G92] Gaisser, T.K., talk presented at the*Vulcano Workshop*, Dec. 2.
[K91] Kochocki, J., et al, *Proc. of the 22nd ICRC, Dublin,* **4**, 291.
[M87] Mikocki, S. and Poirier, J., *J. Phys. G: Nucl. Part. Phys.* **13**, L217.
[M91] Mikocki, S., et al, *J. Phys. G: Nucl. Part. Phys.* **17**, 1303.
[N85] Nelson, W.R., Hirayama, H., and Rogers, D.W.O., Rpt: *SLAC-265.*
[P91] Poirier, J. et al, *Proc. of the 22nd ICRC, Dublin*, **4**, 417(1991).
[P92] Protheroe, R.J. and Szabo, A.P., *Phys. Rev. Letters* **69**, 2885 (1992).
[T91] Trzupek, A., et al, *J. Phys. G: Nucl. Part. Phys.* **17** , L19 (1991).
[W89] Wdowczyk, J. and Wolfendale, A.W., *Ann. Rev. Nucl. Part. Sci.* **39**, 43 (1989).
[W85] Wrotniak, A., Rpt No: *85-191*, Univ. of Md.

Table 1: Proton primaries

N_e	N_μ	H_μ(Km)	R(m)
5499	100	3.9	0 - 13
4558	144	4.1	13 - 25
5255	294	4.5	25 - 50
4315	500	4.8	50 - 100
2593	728	5.2	100 - 200

Table 2: Iron primaries

N_e	N_μ	H_μ(Km)
2150	138	5.8
2470	254	6.6
3410	576	6.6
3400	1088	7.1
2477	1670	7.4

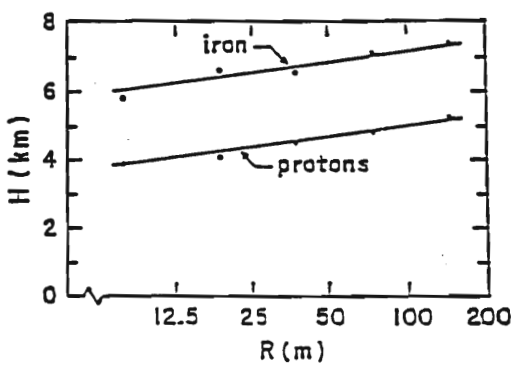

Fig. 1. Extrapolated height of the detected muons versus R, their distance from the core of the shower. There is a uniform distance separation of 2.2 km in height between the iron (high) and proton (low) primaries; the slope indicates that muons at larger R tend to come from somewhat greater heights.

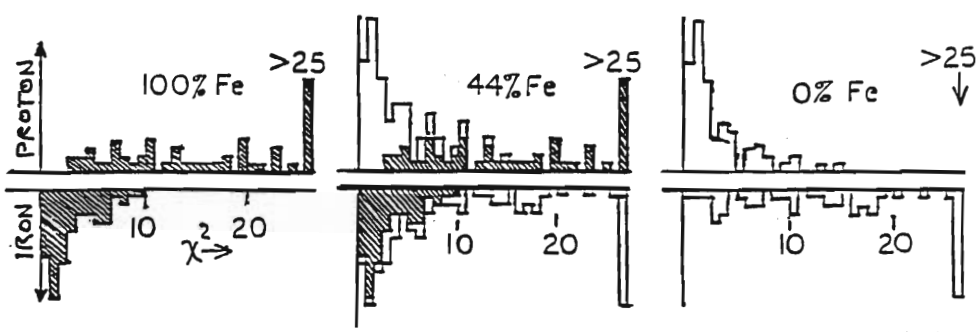

Fig. 2. Distribution of $\chi 2$ for fits to proton hypothesis (upper); and iron (lower). The iron Monte Carlo data are shaded, (proton data unshaded); the percentage of iron data is indicated.