GANIL-A-04-05

GANIL

GRAND ACCELERATEUR NATIONAL D'IONS LOURDS - CAEN
LABORATOIRE COMMUN IN2P3 (CNRS) - D.S.M. (CEA)

SPIRAL2 AT GANIL

M.-H. MOSCATELLO for the SPIRAL2 project group, GANIL-CEA/CNRS, CAEN, FRANCE

Seventeenth International Conference on Cyclotrons 2004 and Their Applications, October 18-22, 2004, Tokyo, Japan

GANIL A 04 05

SPIRAL2 AT GANIL

M.-H. MOSCATELLO for the SPIRAL2 project group, GANIL-CEA/CNRS, CAEN, FRANCE

Abstract

The SPIRAL2 radioactive beam facility at GANIL has been studied since the beginning of 2001, and is now the subject of a detailed design study, starting from the beginning of 2003.

A linear accelerator is proposed to produce a 5 mA deuteron beam, with an energy of 40 A.MeV, i.e. 200 kW beam power. This impinges on a carbon converter wheel for production of neutrons, which then leads to fission in a uranium carbide target. The radioactive fission products are then ionized and extracted from the target/ion-source system. Two beams can be used simultaneously: one at low energy and a second which is accelerated by the existing CIME cyclotron.

Stable heavy ions with q/A=1/3 can also be accelerated by the linac up to an energy of 14.5 A.MeV.

This paper presents a general overview of the project, with the present status of the various studies, and its integration into the present GANIL facility. The various aspects of the R&D needed for the production targets are also discussed.

INTRODUCTION

The SPIRAL2 project is originally based on the LINAG1 conceptual design [1], that proposed a new facility at GANIL, aiming at increasing the variety of radioactive beams already produced.

The high intensity radioactive beams are produced by different methods: fission of uranium target via a carbon converter (main process), direct target irradiation with deuterons, and direct target irradiation with ions. These radioactive ions are then accelerated by the existing CIME cyclotron up to energies around 5-10 A.MeV, and transported towards the existing experimental caves. The SPIRAL2 facility is also designed for the production and acceleration of high intensity stable ion beams, sent in a new experimental cave, mainly for experiments around the coulomb barrier.

Since the creation of the SPIRAL2 project group at the beginning of 2003, many detailed studies have been undertaken [2], and have now led to new solutions and technical choices for the accelerator design as well as for the target/ion-source system and radioactive beam transport lines.

SPIRAL2 GENERAL LAYOUT

The facility consists of a linac driver able to accelerate a 5mA deuteron beam up to 20A.MeV as well as light ion (q/A=1/3) 1 mA beams up to 14.5 A.MeV. The 200 kW deuteron beam impinges on a carbon converter to produce neutrons, used via the fission process of uranium carbide for the production of radioactive ion beams (RIBs). All these fission products, extracted from a source, are sent through a 2-exit separator, which allows us to send two simultaneous radioactive beams through two different lines. One beam is sent to a low energy experimental cave, and another beam is transported towards a charge breeder, and accelerated by the existing CIME cyclotron to maximum energies between 5 and 10 A.MeV, according to the ion q/A ratio. The driver's stable ion beams can be used also for the production of RIBS on different target types, or sent directly towards an experimental cave, for nuclear physics experiments. Fig. 1 shows a schematic layout of the planned facility.

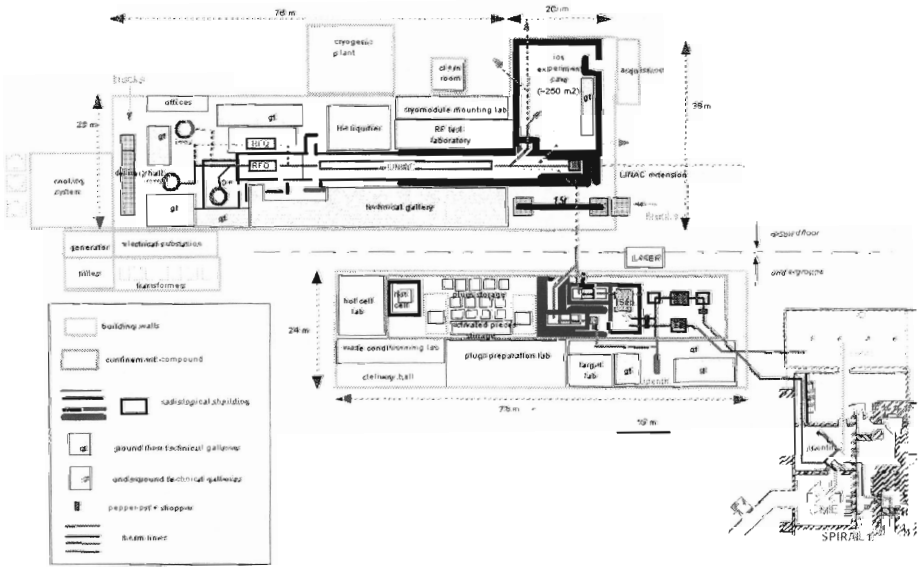

Figure 1: Schematic layout of SPIRAL2 facility

LINAC ACCELERATOR

The driver must accelerate a 5 mA deuteron beam up to 20 A.MeV, as well as 1 mA ion beams up to 14.5 A.MeV, in continuous wave mode [3]. It is based on two ECR sources, respectively for the production of the 5 mA deuteron beam, and for q/A=1/3 ion beams. An RFQ (radio-frequency quadrupole) is the first stage of the accelerator, based on a 4-vane structure without any brazing but with mechanical assembly only, and theoretically 100% beam transmission is obtained through it. A superconducting linear accelerator is then chosen, with independently phased quarter-wave resonators (QWR), in order to have the maximum flexibility for the ion energy capability. The whole accelerator operates at 88 MHz. A schematic layout of the whole accelerator is presented in fig. 2.

The D^+ ion source has been tested, and gives the expected beam intensity, in an emittance smaller than that used for all the calculation: $\varepsilon_{rms,norm}$=0.1π.mm.mrad measured, instead of 0.2π.mm.mrad considered for the calculation. For the ion source, as q/A=1/3 ions are needed, the on-going R&D on the subject will be considered at each step of the project; it is planned to use an A-PHOENIX type source in a future configuration.

Prototypes have also been constructed during this detailed design study, in order to check some newly proposed solutions, e.g. for the RFQ, or to measure the superconducting cavity performance. A 1 metre long RFQ prototype has been built and was tested successfully at full power last month at the LNS in Catania. Two QWRs are under construction, one at beta=0.07, and one at beta=0.12. They are expected to be received at the end of October, and to be tested by the end of 2004.

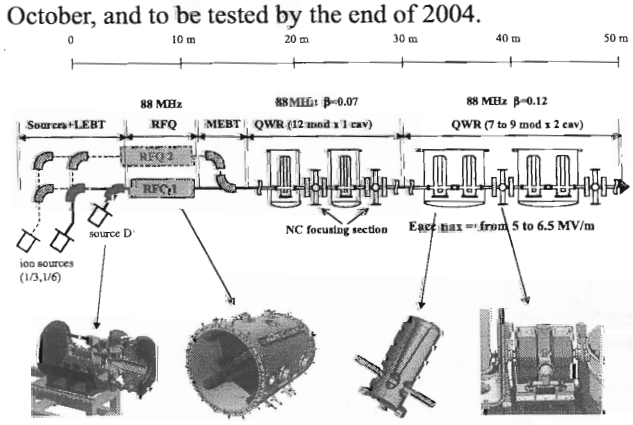

Figure 2: Schematic layout of the linear accelerator.

TARGET/ION-SOURCE PRODUCTION SYSTEM

The target/ion-source system must produce radioactive ion beams, from a 200 kW deuteron beam obtained from the linac accelerator. It is composed of:

- a carbon converter, into which the deuteron beam penetrates and stops, producing neutrons;
- a uranium carbide target, designed for production of 10^{13} or 10^{14} fissions/s, depending on target density;
- an ion source, for the production and extraction of mono-charged radioactive ions. The ion sources will be of different types, depending on the kind of beam needed;
- a containment of the whole system, based on the "plug" solution [4] designed at TRIUMF (fig. 3).

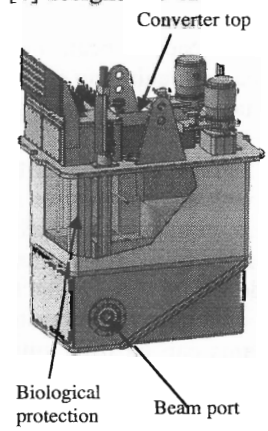

Figure 3: SPIRAL2 target-ion source plug system.

The carbon converter and different types of uranium carbide targets are being designed, and detailed studies are described below in this paper.

As far as ion sources for radioactive beam formation are concerned, the following types are presently envisaged:

- ECR ion source: particularly efficient for the production of gaseous elements such as noble gases of gaseous compounds;
- FEBIAD type ion source, for the less volatile elements;
- thermo-ionic source: particularly efficient for the production of alkalis, alkali-earth and rare earth elements;
- laser ion source: good efficiency for a large variety of non volatile elements and very good selectivity.

The ECR and FEBIAD source types are under development, and have to be designed to be as compact as possible in order to reduce the amount of waste material when dismounting.

The plug system is necessary to contain the converter, target and ion source, which are highly radioactive and contaminated [5]. Moreover, as these components must be raised to a potential of at least 60 kV, it has been decided to design a single plug containing all the elements. This choice has also the advantage of being adaptable to future needs, like the use of a heavy-ion primary beam in targets for fusion-evaporation reactions, without redefining the interfaces with the hot cell where the plug will be placed for maintenance operation.

RADIOACTIVE BEAM TRANSPORT AND POST-ACCELERATION

The radioactive beam lines have to transport all the singly-charged ion beams extracted from the ion source

(up to mass 250), to select simultaneously 2 of them through a separator (in the mass range from 70 to 160), and to send independently these 2 beams towards 2 different lines: one to a low energy physics area, and the second to a charge breeder to permit its post-acceleration by CIME cyclotron. Each of these 2 lines must be able to be switched to steer independently the 2 selected beams to a common identification station. The highly radioactive environment of this line must be taken into account from the very first design, in order to insure personal safety, and to prevent the spread of radioactive materials [6].

The source-separator beam line has to be as short as possible to reduce localised beam losses areas and is only composed of electrostatic elements to transport simultaneously all singly-charged ion species extracted from the source. It is foreseen to build it in a plug structure, similar to this of the target source system, for maintenance and safety reasons. For the design of this line, the conditions corresponding to the ECR source are taken into account, as they correspond to the highest beam emittance and, at the same time, highest beam intensity (up to 5mA total intensity, mainly due to light ions issued from gas support and target out-gassing).

The design of the low energy separator is in progress, and two solutions are studied simultaneously : one BRAMA (Broad Range Atomic Mass Analyser) type solution [7], with an Elbek magnet, and one "Wien filter" solution. In the BRAMA solution (fig. 4a), the magnet, leading selected masses to parallel ways at its exit, is followed by 2 electrostatic deflectors, that can slide along 2 different lines, each parallels to the focal plan, and deliver 2 different beams among the fission products in the 70-160 mass range. It performs completely the 2 selected beams independence specifications but is hardly relevant to a perfect optical management of beam characteristics at its object point, which is difficult in space charge regime. An initial space charge suppresser section is needed before the separator to perform good transmissions. In the second solution (fig. 4b), a Wien filter is installed just after a short electrostatic focalising section. An on-axis exit is managed for the main beam and an off-axis exit is dedicated for low energy beam line. The 2 selected beams are post-analysed by two magnetic dipoles. This system is particularly acceptant in terms of space charge (no focusing point is necessary before beams selection and thus higher intensities are transportable) but the two beam tuning is not independent.

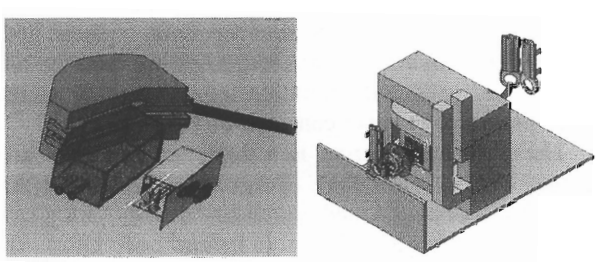

Figure 4: Layout of the possible separators: a) Brama solution, b) Wien filter solution.

An identification station is placed off-line, just after the separator, in order to identify the selected isotopes, and to measure their intensity.

The charge breeder source, that transforms the selected singly-charged beam into multi-charged beams adapted to the acceleration into the CIME cyclotron, is based on the PHOENIX type source. The results of this method are very promising [8], and used now in most of the radioactive beam facilities based on the ISOL method. The radioactive environment of this booster is very constraining, as the whole booster chamber and the injection and extraction will be contaminated by fission products; it was thus decided to place the booster as close as possible to the "nuclear" part of the building. The safe handling of the whole equipment is under study.

The transport of the radioactive beams towards CIME has to be made consequently through a rather long beam line (~50m), and the vacuum requirements then become more stringent: ~1 _ 10^{-8} mbar to obtain 95% transmission.

The radioactive multi-charged ion beams are then accelerated by the existing cyclotron CIME, presently used in the SPIRAL facility. Its working diagram is presented in figure 5, and some cases of SPIRAL2 radioactive beams are shown.

For mass purification, especially necessary when a non-selective ion source is used, several methods are proposed. The CIME resolution has actually been measured experimentally, and it is equal to 1.6 _ 10^{-4}, which is not sufficient for many heavy isobaric masses. Consequently, we plan to use some RF-based separation methods, like a vertical selection in CIME [9], or an RF separation in the beam transport lines; these have to be studied in more technical detail.

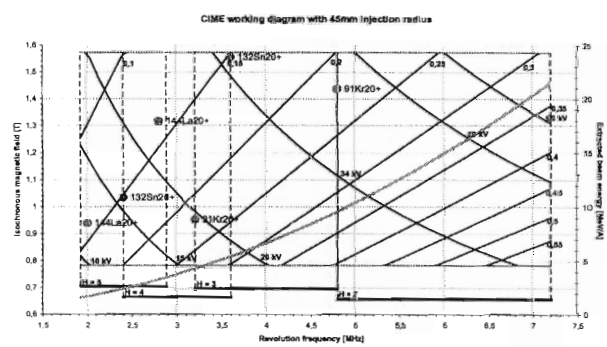

Figure 5: The CIME working diagram, with some examples of SPIRAL2 beams.

SAFETY ASPECTS

As far as the accelerator is concerned, the radio-protection is rather straightforward. Deuteron beam losses along the accelerator will be very low (<1 W/m in the superconducting part), and a very low activation of the structure is foreseen: one should be able to enter the cave just after a beam interruption. A dedicated monitoring system will survey the beam-losses online, and will cut the beam when beam loss limits are surpassed.

In terms of safety, the critical point of the facility is the production hall where the plug containing the UC_x target and ion-source are placed, as well as the beam-lines dedicated to the transport of the fission products, the separator and the charge-breeder [10]. A high quantity of radioactivity is produced in the uranium target (a few 10^{14} Bq), with high radiotoxicity elements like alpha-emitters, iodine, and important quantities of radioactivity have to be transported up to the charge breeder. It is globally reduced by a factor 2000 up to the entrance of the CIME cyclotron. This leads to very important studies concerning the remote handling of the different components for storage and dismantling operations in hot cells, as well as the so-called "production building", in order to follow the general safety and radioprotection rules in France. A nuclear industry company will undertake these studies in a few weeks from now. In the production building, 2 static barriers and 2 dynamic barriers will be applied: the vacuum chamber and building for the static confinement, the vacuum system itself and the ventilation system for the dynamic confinement. A study of the existing GANIL system is in progress: if we want to avoid the 2-barrier principle, it could mean that the radioactive beam intensity would have to be reduced in some specific cases. Moreover, a concept using a cryotrap, located just after the separator, is planned in order to reduce drastically the radioactivity in the beam line after this equipment. It would stop radioactive gases from diffusing all along the vacuum chamber, while allowing the radioactive beam to pass; it is based on the use of different temperature levels (80K and 20K) and activated carbon, to stop the different radioisotopes according to their properties, and its efficiency has to be greater than 10^3 (fig. 6).

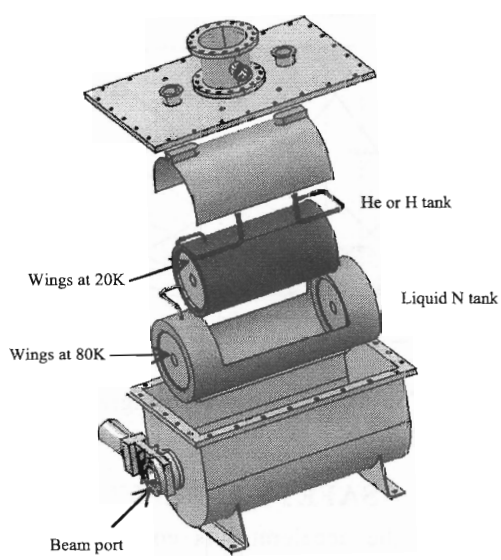

Figure 6: Schematic diagram of the cryotrap principle.

PRODUCTION TARGET DEVELOPMENT

Special emphasis is laid on target development, as they represent one of the major points of the whole project: the carbon converter wheel must be able to stand a 200 kW of 20 A.MeV deuteron beam, and the UC_x target must be defined to produce a maximum of fission products, while taking into account all the safety requirements.

Carbon converter wheel

The carbon converter wheel is based on a set of graphite pieces fixed together around a 1 metre diameter structure, rotating around an inclined axis at a speed between 200 and 400 r.p.m. It reaches a temperature around 1700°C when the 200 kW deuteron beam impinges on it, and is cooled by radiation through a cooled copper circuit placed around it (fig. 7). This whole system is located in the target/ion-source plug system, but the carbon wheel itself and its motorisation system must be protected from the rapid neutrons coming directly from the uranium target, in order to reduce the material activation for maintenance of items such as ball bearings in particular [5].

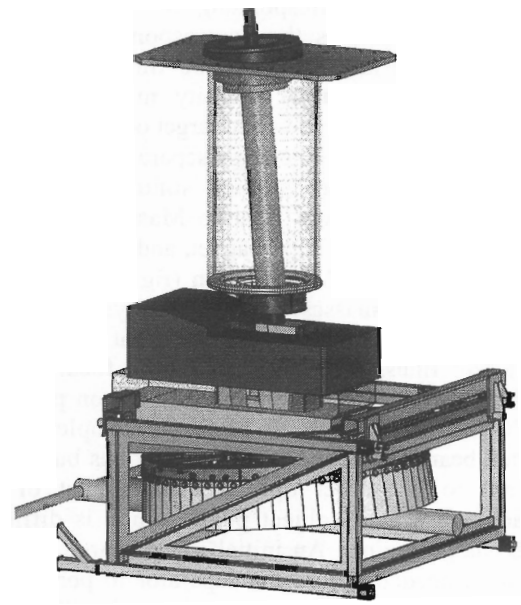

Figure 7: Layout of the carbon converter wheel.

Uranium carbide production target

The SPIRAL2 specification is to reach 10^{13}-10^{14} fissions/s in the case of UC_x target using a 40 A.MeV 5 mA deuteron beam with a rotating carbon converter. The target has to work at a temperature higher than 2000°C in order to allow an efficient release of the produced radioactive elements. The power deposited inside the target by the fission reactions is about 500 W for 1.6 10^{13} fissions/s. Thus extra heating must be added in order to reach the operating temperature. A tantalum oven prototype is under construction [11].

The production target is a depleted uranium carbide target ($^{235}U/^{238}U<0.3\%$). Targets with two different densities are being tested: a standard density (3.8 g/cm^3 of UC_x) and high density (11g/cm^3 of UC_x) under development in a Legnaro/Gatchina collaboration [12]. The standard density thick target is an assembly of disks (thickness about 1 mm) composed of a mixture of

uranium carbide and graphite. These pellets are obtained by compressing a mix of uranium oxide and graphite powders. The carbonation is made by heating the pellets up to 2000 °C under vacuum. The pellets are then placed in a graphite container surrounded by a tantalum foil to avoid reaction between carbon and the oven. The main difficulty will be to obtain a homogeneous temperature of the target over a long duration (3 months). Moreover, the transfer tube between the target and the ion source has to be heated at 2000°C too, for the ionisation of non-volatile nuclei.

The geometrical parameters of the target, as well as its position relative to the converter, have a major effect on the production rates. Fig. 8 illustrates the importance of putting the target as close as possible to the converter. It has also been demonstrated that a conical target would not be better for the production than a cylindrical one with the same volume. We plan to make the target diameter 80 mm, length 80 mm, at about 40 mm from the entrance of the converter (fig. 8).

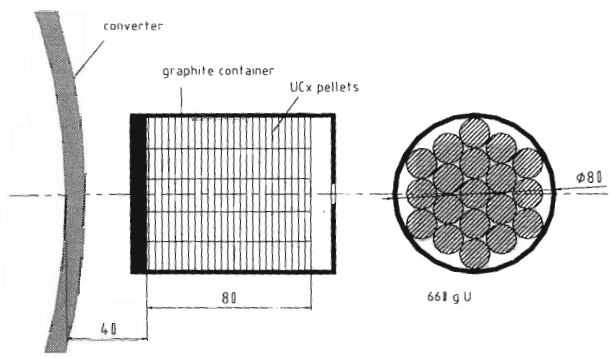

Figure 8. The SPIRAL 2 target: 19 series of about 60 pellets of diameter 15 mm, thickness 1 mm, spacing about 0.3 mm between each pellet.

Some effusion calculations using the Monte-Carlo method have demonstrated that spacing between the pellets can decrease the mean number of collisions of radioactive atoms needed to reach the entrance to the ion source. However, at the same time the production will be lower due to the lower effective density of the target. A new kind of target made of an assembly of disks with 3 bumps of thickness 0.3 mm has been realized, as shown in fig. 9. This new target has been tested on line using the PARRNE setup (with 1 μA of a 25 MeV deuteron beam on a carbon converter).

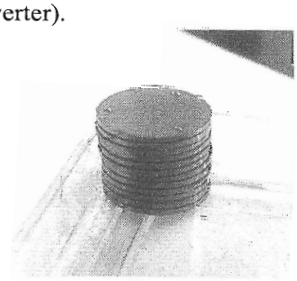

Figure 9: View of a piece of the target with 0.3 mm bumps. The target consists of 123 pellets (15 mm diam.) Each pellet is about 1 mm thick overall (0.7 mm + 0.3 mm).

Release time measurements on ^{132}Sn and ^{139}Xe have been performed using this new UC_x target, and the analysis of the first results seems to confirm that the release time remains the same for diffusion but decreases for effusion [13].

CONCLUSION

The detailed study of the SPIRAL2 facility is in progress. The different prototype test results for the linac accelerator should occur by the end of 2004, and should allow us to freeze the linac design rather soon.

For the radioactive beam production facility, some more detailed studies are needed, concerning the separators, the beam transport lines, as well as all equipment connected to nuclear maintenance systems. The "production" building layout will strongly depend on the results of these studies.

Meanwhile, the development of production targets continues, and should also lead to the construction of several prototypes, and to direct production measurement comparisons.

REFERENCES

[1] W. Mittig et al., "LINAG Phase1", GANIL internal report, June 2002, http://www.ganil.fr/research/sp/reports

[2] A. Mosnier, "SPIRAL2: a high intensity deuteron and ion linear accelerator for exotic beam production", PAC 2003, Portland, USA, May 2003, p.595

[3] M.-H. Moscatello, "SPIRAL2 at GANIL", LINAC 2004, Lübeck, Germany, August 2004

[4] P.Bricault et al, "ISAC: radioactive ion beam facility at TRIUMF", LINAC96 proceedings, August 1996, Geneva, Switzerland

[5] Y. Huguet et al., "Description and maintenance of the SPIRAL2 ECS plug system", SPIRAL2 Technical Report, August 2004

[6] B. Launé et al., SPIRAL2 InterimReport, December 2003

[7] J.M. Nitschke, "BRAMA, a Broad Range Atomic Mass Analyser for the ISL", Particle Accelerators, 1994, Vol.47, pp.153-158

[8] T. Lamy et al., "Charge breeding method results with the Phoenix booster ECR ion source", Rev. Sci. Instrum. Vol. 73, no. 2, pp 717-719 (2002)

[9] P. Bertrand et al., "Improvement of the mass separation power of a cyclotron by using the vertical selection method", this conference

[10] B. Rannou et al., SPIRAL2 Interim Report, December 2003

[11] O. Bajeat et al., "UCx target design for the SPIRAL2 and ALTO projects", EXON conference proceedings, July 2004

[12] V.Panteleev et al, "Uranium carbide targets of different densities for RNB production", http://www.ganil.fr/eurisol/TOWN_MEETING_ABANO/VladimirPanteleev.pdf

[13] C. Lau et al., NIM B 204 (2003)246