FPRINT-93-44

Fermilab Library
0 1160 0029292 4

Nuclear η Production

J. T. Londergan
Dept. of Physics and Nuclear Theory Center
Indiana University
2401 Milo Sampson Lane
Bloomington, IN 47408

Abstract

Nuclear η production has been studied for the past few years. In this talk we concentrate on the prospects for obtaining information through inclusive production of η mesons on nuclei, and we review the question of whether η mesons can be used to extract information on the $s\bar{s}$ content of the nucleon.

1 Introduction

There has been much interest in η meson production in recent years. After the pion, eta mesons represent the second largest inelastic channel in pion–induced reactions on nucleons. η production near threshold is surprisingly large[1], and this has led to several studies of threshold production of the η. This has been the subject of several recent workshops on meson production.[2–8]

Many of the theoretical issues here are best addressed in few-body systems, where it is possible to sum all possible amplitudes exactly. The talks in this workshop by Wilkin[9] and Liu[10] deal with various aspects of this problem. As a result, we will concentrate here on aspects of η production in heavier systems. The important elements here are the strangeness content of the η, and its selective coupling to only a few baryon isobars. As detection of the η will necessarily produce experimental uncertainties of a few MeV, and cross sections will not be very large, exclusive reactions to specific nuclear final states can rarely be separated. There is recent experimental data on subthreshold production of η on nuclei.[11] Quantitative understanding of such processes is difficult as they depend critically on detailed aspects of nuclear momentum distributions and Fermi motion effects. For this reason, we focus in this article on prospects for understanding experiments which can involve quasifree scattering, with relatively large cross sections directly related to free η production. Such conditions are likely to be realized in inclusive (π,η) or (K,η) reactions. At the end of this talk we review a proposal for using nuclear η and η' reactions to investigate the strangeness content of the proton.

2 Basic Features of η Production

The η (548.8 MeV) and η' (957.5 MeV), as members of the $SU(3)$ pseudoscalar nonet, share the $s\bar{s}$ pseudoscalar strength. Each is a mixture of SU(3) singlet ($|1\rangle$) and octet ($|8\rangle$) eigenstates, with composition

$$\begin{aligned} |\eta\rangle &= \cos\theta\,|8\rangle - \sin\theta\,|1\rangle \\ |\eta'\rangle &= \sin\theta\,|8\rangle + \cos\theta\,|1\rangle \end{aligned} \tag{1}$$

where the octet and singlet are defined by

$$|8\rangle \equiv \frac{u\bar{u} + d\bar{d} - 2s\bar{s}}{\sqrt{6}}; \qquad |1\rangle = \frac{u\bar{u} + d\bar{d} + s\bar{s}}{\sqrt{3}}$$

Alternatively we could decompose these mesons into their strange and nonstrange components, i.e.

$$\begin{aligned} |\eta\rangle &= \alpha|ud\rangle - \beta|s\rangle \\ |\eta'\rangle &= \beta|ud\rangle + \alpha|s\rangle \end{aligned} \tag{2}$$

where

$$|ud\rangle \equiv \frac{u\bar{u} + d\bar{d}}{\sqrt{2}}; \qquad |s\rangle \equiv s\bar{s}$$

Experimentally $\theta \approx -20°$,[12,13] which is equivalent to $\alpha = 0.822, \beta = 0.570$. From Eq. [2] we see that the $s\bar{s}$ components in η and η' are large and of opposite sign.

A distinctive feature of η mesons is that they couple to only a very small number of baryon resonances. Table I shows the branching ratios for the only baryon resonances with large partial widths to the η channel.[13] There are only four such states: the N(1535) S_{11} state with ηN branching ratio 45-55%, the N(1710) P_{11} state with ηN branching ratio about 25%, the $\Lambda(1670)$ S_{01} state with $\Lambda\eta$ branching ratio 15-35%, and the $\Sigma(1750)$ with $\Sigma\eta$ branching ratio 15-55%. No other nonstrange baryon resonance has an ηN branching ratio of more than a few percent.

State		J^π	Branching Ratio		p^i
$N(1535)$	S_{11}	$\frac{1}{2}^-$	$N\pi$	$35-50\%$	467
			$N\eta$	$45-55\%$	182
			$N\pi\pi$	$\sim 10\%$	422
$N(1710)$	P_{11}	$\frac{1}{2}^+$	$N\pi$	$10-20\%$	587
			$N\eta$	$\sim 25\%$	410
			ΛK	$\sim 15\%$	264
			$N\pi\pi$	$< 50\%$	554
$\Lambda(1670)$	S_{01}	$\frac{1}{2}^-$	$\overline{K}N$	$15-25\%$	414
			$\sum\pi$	$20-60\%$	393
			$\Lambda\eta$	$15-35\%$	64
$\sum(1750)$	S_{11}	$\frac{1}{2}^-$	$\overline{K}N$	$10-40\%$	486
			$\sum\pi$	$< 8\%$	455
			$\sum\eta$	$15-55\%$	81

Table 1: Baryon resonances with large η Branching Ratios. State, Spin/Parity, major branching ratios and cm momentum p^i.

The strong coupling of the η to only a few baryon states has significant consequences for nuclear η production. First, experimental observation of the (π, η) reaction in nuclei guarantees formation of an intermediate N(1535) or N(1670) in the nucleus. The fact that the η meson couples to nucleons almost exclusively through one or two baryon resonances suggests that the "isobar–hole"[14] treatment, used extensively for pion–induced reactions, should be an excellent model for η production reactions.

At best, one can expect energy resolution for reactions like (π, η) to be of the order of a few MeV. Except for transitions to the ground states of a few nuclei, it will not be possible to isolate nuclear transitions to individual states. Furthermore, the exclusive (π, η) reaction leading to bound states of

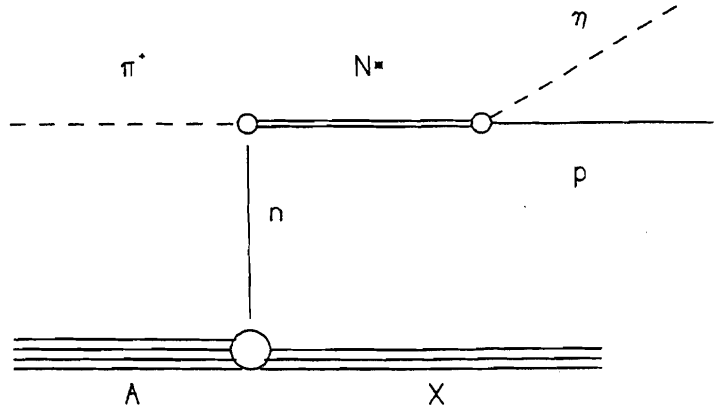

Figure 1: Schematic amplitude for the inclusive reaction $\pi^+ + A \rightarrow \eta + X$ proceeding through intermediate formation of baryon resonance which undergoes quasifree decay to $\eta + p$.

the final system is a high momentum transfer reaction, so expected cross sections will be small, and will depend sensitively on nuclear momentum densities at very high momentum transfer where they are both small and poorly known. A more promising type of experiment on heavier nuclei would be inclusive reactions such as (π, η) or (K, η), where one observes only the η in the final state. In the rest of this paper we will consider the physics which can be extracted from such reactions and show comparison of first calculations with existing data for this process.

3 Inclusive Nuclear η Production

Consider inclusive reactions of the form $\pi + A \rightarrow \eta + X$, where the final η is observed through its decay to two photons. As pointed out earlier, it is reasonable to assume that the η is produced only through its coupling to a few baryon resonances. Near threshold for this process it should be sufficient to consider the coupling only to the N(1535) S_{11} $\pi - N$ resonance with a large η branching ratio. We assume the dominant reaction process will be formation of the N(1535) on a target nucleon, as shown schematically in Fig. 1. The isobar propagates through the nucleus and undergoes quasifree decay into a continuum nucleon plus η. The reaction can then be analyzed in distorted-wave impulse approximation (DWIA). One includes optical distortions of the initial pion with the nucleus. η production occurs through the process $\pi^+ + n \rightarrow \eta + p$ in the nucleus. Bhalerao and Liu[15] have found coupled channel amplitudes which fit the free elementary process. This elementary amplitude must then be modified to account for the self-energy of the isobar in the nucleus. Since the η is assumed to interact with nucleons only through isobar formation, η-nuclear interactions are included in the nuclear self-energy of the isobar. Peng et al.[16] have measured the inclusive (π^+, η) process on ^{12}C, and theoretical DWIA calculations of this process have been carried out by Kohno and Tanabe (KT)[17], and by Krippa and Londergan (KL)[18]. In Fig. 2 we show the inclusive cross sections of Peng et al. for pion incident momentum 680 MeV/c, as a function of the η energy. The histogram gives the results of Gibbs and Kaufman[19], who carried out an intranuclear cascade calculation of η formation. The other curve shows the results of the KT DWIA calculation. The INC calculation of Gibbs and Kaufman gives reasonable agreement with the data for larger η energies, but seriously underestimates experimental results at low η energies. The KT results have the same shape as the data but are roughly 40% below the experimental results. Assuming the reaction mechanism is correct, these inclusive reactions will be quite sensitive to the self energy of the N(1535) in the nucleus. Kohno and Tanabe approximated this with an effective (complex) isobar-nucleus potential of the form $V_{N*} = -50 - 50i$ MeV, and a free isobar width of 150 MeV.

In Fig. 3 we show the results of Krippa and Londergan. The dot-dashed curve is obtained by

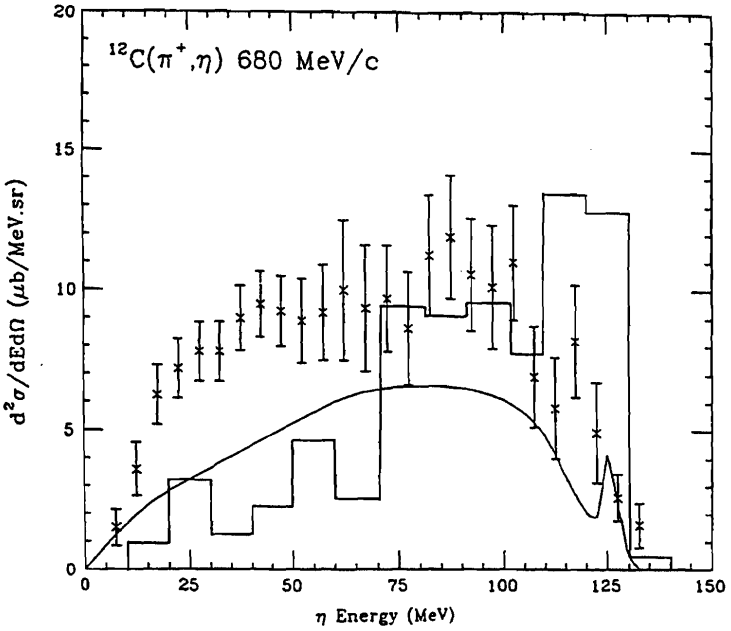

Figure 2: (π^+,η) inclusive reaction on ^{12}C. Data is from Ref. [16]; histogram: INC calculations of Ref. [19]; solid curve: DWIA calculation of Ref. [17].

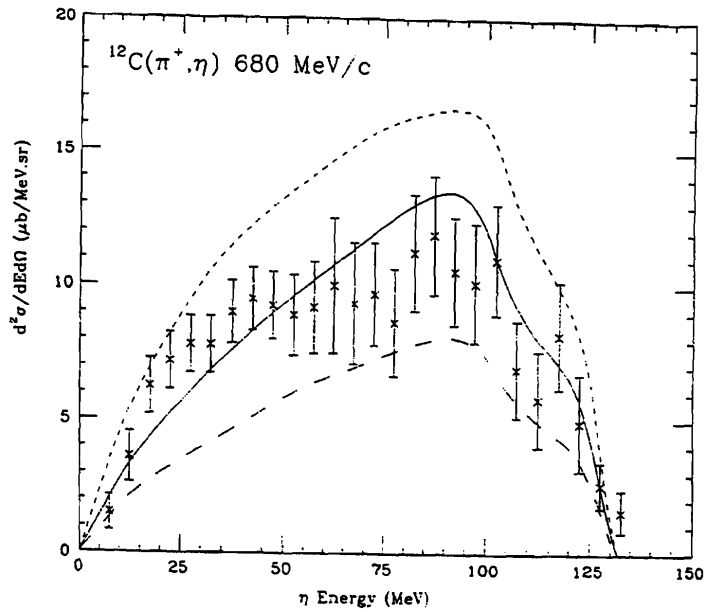

Figure 3: (π^+,η) inclusive cross section on ^{12}C, at p_π^{lab} = 680 MeV/c. Data is from Ref. [16]. Dashed curve: results using only free N(1535) width of 150 MeV [18]; long-dashed curve: results assuming free N(1535) width 200 MeV; solid curve: full results including isobar-nucleus self energy.

neglecting the isobar-nucleus interaction and assuming a free isobar width of 150 MeV; the dashed curve also neglects the isobar-nucleus interaction but takes a free isobar width of 200 MeV. The solid curve uses a free width of 150 MeV, takes the real part of the isobar-nucleus interaction to be −50 MeV, and calculates the imaginary part of the isobar-nucleus interaction by evaluating the $N*$ self energy amplitudes of Fig. 4 in infinite nuclear matter. From Fig. 3 we see that the inclusive cross sections are quite sensitive to the real and imaginary parts of the isobar self-energy in nuclei. The solid curve in Fig. 3 is in good agreement with the experimental results of Peng et al. In addition, the inclusive measurements show considerable sensitivity to the isobar-nucleus self-energy. Therefore, this experiment can in principle provide information on nuclear interactions of the isobar. Although the DWIA calculations of Kohno-Tanabe and Krippa-Londergan are quite similar, the KT results (curve

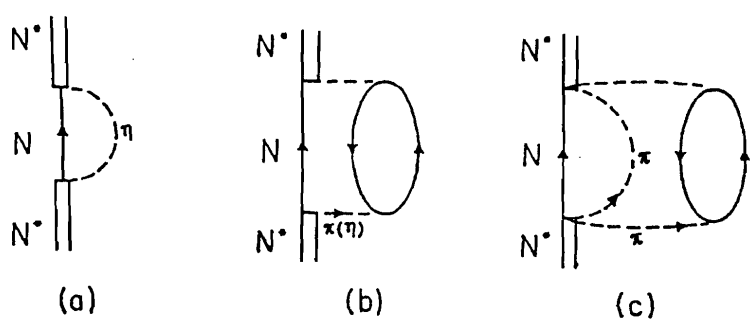

Figure 4: Schematic representation of isobar self-energy contributions in the nucleus. (a) Pauli blocking contribution to N(1535) width; (b) one-meson decay of N^* in the nucleus; (c) two-meson decay of N^*.

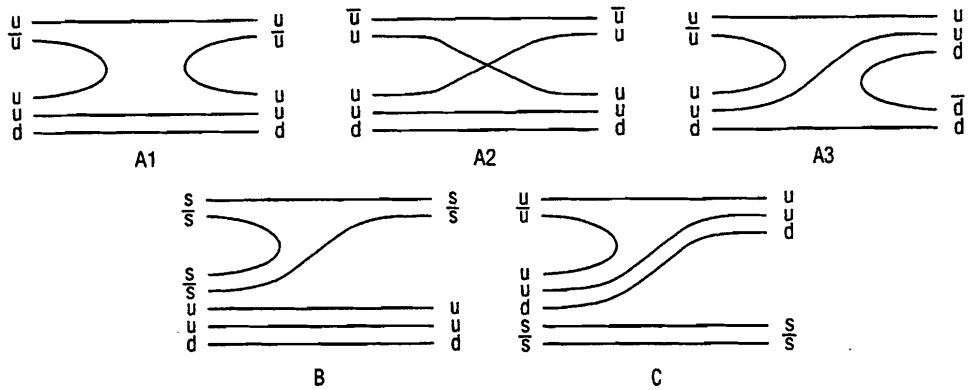

Figure 5: Quark-flavor graphs for reactions $\eta p \to \eta p, \eta' p$. Processes A correspond to meson and baryon exchange involving nonstrange quarks; processes B and C involve strange quarks and $uuds\bar{s}$ component in the proton.

in Fig. 2) are roughly 40% smaller than the KL predictions. This discrepancy occurs for three reasons. First, the KL calculations include the Coulomb contribution in the pion-nucleus interactions; this increases the cross sections at forward pion angles. Second, the pion-nucleus interactions were included by KL in Glauber approximation, using a symmetrized Fermi distribution for the nuclear density, rather than a harmonic oscillator parameterization as in KT. This increases the expected cross sections for larger pion-nucleus angles. Finally, KL used a microscopic calculation of the imaginary isobar-nucleus self-energy rather than the phenomenological potential of KT. All of these effects tend to increase the inclusive η production cross section. However, the discrepancies in theoretical calculations also show that absolute η production cross sections are sensitive to details of the many-body interactions apart from the isobar self-energy (e.g., the pion-nucleus interaction).

These first calculations and experiments suggest that inclusive η production on nuclear targets may shed light on the nuclear self-energy of certain baryon resonances. At present we are attempting a microscopic calculation of both the real and imaginary self-energy of these resonances, to test our theoretical understanding of such systems. Additional experimental data for pion-induced inclusive η production, on other nuclear targets, would be extremely useful. One could also hope to extract similar information on other baryon resonances through measuring the inclusive nuclear processes (K^-, η). In order to extract such information one would need to have a reliable model for the elementary processes $K^- + p \to \Lambda(1670) + \eta$, and $K^- + N \to \Sigma(1750) + \eta$.

4 η's and the $s\bar{s}$ Content of the Nucleon

Since both the η and the η' have substantial $s\bar{s}$ content, and the $s\bar{s}$ amplitude has opposite sign for η and η' (see Eq. 2), to first order these mesons can couple to a pre-existing $s\bar{s}$ amplitude in the proton. Dover and Fishbane[20] used this idea to argue that measurement of $\eta + p$ elastic scattering and the transition $\eta + p \to \eta' + p$ could allow one to extract the $s\bar{s}$ content of the proton. This is a very promising idea since the η and η' contain the $s\bar{s}$ pseudoscalar strength. However, we will argue that for both experimental and theoretical reasons this particular suggestion does not seem feasible. The argument proceeds as follows. The relevant quark amplitudes for $u\bar{u}$ scattering from the proton are shown in Fig. 5. The amplitudes labelled A involve scattering with nonstrange quarks; amplitude B involves interaction of the $s\bar{s}$ piece of the η, and a proton with a pre-existing $s\bar{s}$ component; amplitude

C is a baryon exchange term involving a proton with an $s\bar{s}$ component, coupling to the $s\bar{s}$ component of the η or η'. Using the components α and β from Eq. 2, the difference in $\eta + p$ elastic scattering and $\eta + p \to \eta' + p$ takes the form

$$R_\eta \equiv \frac{\beta^2\sigma(\eta p \to \eta p) - \alpha^2\sigma(\eta p \to \eta' p)}{\sigma(\eta p \to \eta p)} = \frac{4\beta}{\alpha}\mathrm{Re}\left[\left(\frac{\beta B}{\alpha} - C\right)/A\right]$$

Since both B and C are proportional to the amplitude for $s\bar{s}$ to appear in the proton, then measurement of this quantity could, to lowest order in OZI rule, determine these quantities.

Unfortunately, measurement of the proton strangeness content through η scattering does not appear feasible, for three reasons. First, as there is no clean signal for η' formation, and since the η' lifetime is insufficient to observe this particle far from the nucleus, there is at present no definite way to measure η' formation cross sections. Second, there are additional amplitudes besides those shown in Fig. 5 which are independent of the nucleon strangeness content. For example, in addition to amplitude B we could have Pomeron exchange with the nucleon;[21] this amplitude might be large and could make it impossible to extract the $s\bar{s}$ content of the proton. Third, the most likely measurement of $\eta + p$ scattering would be in the forward direction. However, amplitudes such as C are backward–peaked; this amplitude would likely be negligible in the forward direction.

As a consequence, it seems unlikely that the process suggested by Dover and Fishbane can give us directly the $s\bar{s}$ content of the proton. Nevertheless, the large $s\bar{s}$ amplitudes in the η and η' suggest that some scattering observables might be sensitive to this feature.

5 Conclusions

The η meson couples to a very small number of baryon resonances, since only a few nonstrange and strange baryons have large branching ratio to the η channel. This means that the isobar-hole model developed for pion-nuclear interactions should give a good description of nuclear η meson production. For the process $\pi + N \to \eta + N$, one has a reasonable parameterization of the elementary amplitude from Bhalerao and Liu. One can then describe inclusive η production induced by pions in terms of an elementary η production T-matrix modulated by the nuclear self energy of the baryon resonance. We demonstrated how this works for inclusive η production on ^{12}C, as measured by Peng et al. This work suggests that inclusive (π, η) or (K, η) reactions could provide information on nuclear medium effects for baryon resonances which couple strongly to the η channel.

Next, we discussed a proposal to use η and η' scattering to extract information about the $s\bar{s}$ content of the proton. Although this is an interesting proposal, this process was unlikely to provide the desired information, for both theoretical and experimental reasons.

Charged pion-induced η production occurs on only a single type of nucleon; i.e. (π^+, η) production occurs only on target neutrons. Finally, it will only be possible to extract useful information about medium effects on these baryon resonances, if we have more precise experimental information on the elementary reactions such as $\pi + N \to \eta + N$, or $\overline{K} + N \to \eta + \Lambda$.

The work described here was done in collaboration with B.V. Krippa. The author acknowledges useful conversations with L.C. Liu and W.W. Jacobs. This work was supported in part by the NSF under contract NSF-PHY91-08036.

References

[1] J. Berger *et al.*, Phys. Rev. Lett. **61**, 919 (1988).

[2] *Workshop on the "Production and Decay of Light Mesons"* (Ecole Polytechnique, Paris), ed., P. Fleury (World Scientific, Singapore, 1988).

[3] *Proc. "Phys. with Light Mesons and 2nd Int'l Wkshp. on $\pi^- N$ Physics,"* (Los Alamos, 1987), eds., W.R. Gibbs and B.M.K. Nefkens (LASL, LA-11184-C).

[4] *Proceedings Workshop on "Rare Decays of Light Mesons,"* (Gif s/Yvette, 1990), ed., B. Mayer (Editions Frontiers, 1990).

[5] *Proc. of PSI Spring School on "Prospects of Hadronic Physics at Low Energies,"* (Zuoz, Switzerland, April, 1990).

[6] *Proceedings of "3rd Int'l Symposium of Pion-Nucleon and Nucleon-Nucleon Physics,"* (Gachina, April, 1989).

[7] *Proceedings 17th INS Int'l Symposium on Nuclear Physics at Intermediate Energy* (Tokyo, 1988).

[8] W.W. Jacobs, "Particle Production Near Threshold," ed. H. Nann and E.J. Stephenson, (AIP No. 41, New York, 1991) p. 170.

[9] C. Wilkin, contribution to this conference.

[10] L.C. Liu, contribution to this conference.

[11] E. Chiavassa et al., Zeit. Phys. **A342**, 107 (1992); ibid **A344**, 345 (1993).

[12] F.J. Gilman and R. Kauffman, Phys. Rev. **D36**, 2761 (1987).

[13] "Review of Particle Properties," Phys. Lett. **B239**, 1 (1990).

[14] M. Hirata, J.H. Koch, F. Lenz and E.J. Moniz, Phys. Lett. **B70**, 281 (1977); E. Oset, H. Toki and W. Weise, Phys. Rep. **83**, 282 (1982).

[15] R.S. Bhalerao and L.C. Liu, Phys. Rev. Lett. **54**, 865 (1985).

[16] J.C. Peng *et al.*, Phys. Rev. Lett. **63**, 2353 (1989).

[17] M. Kohno and H. Tanabe, Nucl. Phys. **A519**, 755 (1990).

[18] B.V. Krippa and J.T. Londergan, Phys. Lett. **B286**, 216 (1992).

[19] J.C. Peng, Ref.[6], p. 315: Ref. [7], p. 233.

[20] C.B. Dover and P.M. Fishbane, Phys. Rev. Lett. **64**, 3115 (1990).

[21] B. Kopeliovich, private communication.