3

PROGRESS OF THE MOSCOW MESON FACTORY LINAC RF PHASE AND AMPLITUDE CONTROL SYSTEM

Fermilab Library
0 1160 0019770 1

S.I.Sharamentov, V.V.Edachev
Institute for Nuclear Research
of the Russian Academy of Sciences
Moscow, 117312, Russia

A.I.Kvasha, A.D.Belov, V.V.Kuznetsov
Moscow Radiotechnical Institute
Moscow, 113519, Russia

DEC 1992
LIBRARY

Abstract

The update configuration of the MMF linac rf phase and amplitude control systems are presented. The structure of systems, controlling devices and specific feedback controller with Smith compensation and simulated feedforward control loop are described.

1 INTRODUCTION

At present 5 accelerating cavities of DTL and 10 of 28 cavities of DAW parts of Moscow Meson Factory Linear Accelerator operate and provide design parameters, and this has enabled to accelerate 10 mA, 250 MeV proton beam. During last 3 years various modifications and improvements tended to higher accuracy of systems, extension of dynamic range, providing computer control of rf system and higher reliability were made with rf feedback and feedforward control systems. Main modifications are: the new controlling devices of DAWL feedback system , the Smith controllers in both DT and DAW parts of accelerator and the simulated feedforward control loop with closed feedback.

2 SYSTEM CONFIGURATION

Figure 1 is a simplified diagram of the components in the rf feedback systems of the DT and DAW parts of the linac. The amplitude stabilization of an accelerating field in DT cavities at 198.2 MHz is produced by modulation of plate voltage of the amplification channel output stage power triode, and in DAW cavities at 991 MHz by modulation of input power of a klystron (as shown by dashed line in Fig.1). The amplitude and phase feedback systems are the combination both fast (within the limits of rf pulsed duration) as well as slow automatic control systems. The controlling devices of fast systems are electronic phaseshifter and attenuator (or plate modulator in DTL), those of slow systems - coaxial phase-shifting line and spiral attenuator driving by stepping motors. In order to eliminate the influence of temperature instability, slow systems of automatic control are introduced which stabilize the rf field phase in each cavity relative to the field phase in the preceding cavity [1].

3 CONTROLLING DEVICES

The experience of operation with travelling-wave tube as a combined controlling device of DAWL rf phase and amplitude feedback systems had shown a number of its shortcomings , that were the reason for development of new fast controlling devices. A diagram of the new controlling devices is illustrated in Fig. 2. They are a stripline reflected-type phaseshifter PS1 with varactors as voltage-controlled element and attenuator, assembled of two the same phaseshifters PS2, PS3 and two 90° - hybrid H1, H2. Full range of each phaseshifter is about 300°. The operation of the attenuator is based on an opposite-phase shifting of two output vectors of bridge H1 and their following summing on bridge H2. In order to achieve an opposite-phase shifting of vectors by unipolarity control signal the inverse polarities of varactors and bias voltage in PS3 are used. The amplitude control law is

$$U_o = U_i \mid \sin(SU_c + \Phi_o)\mid \qquad (1)$$

were S - transfer coefficient of phaseshifters, Φ_o - initial phase shift at the H2 input ports.

There is no phase modulation under amplitude controlling in the attenuator, and that is its main advantage.

A controlling devise of DTL amplitude feedback loop is a plate modulator made of power metal-ceramics triode seriesly connected with an amplification channel output stage tube. Pre-modulator high voltage isolation is accomplished by pulse transformer in the triode control grid chain. Principal modification of plate modulator is a new inner feedback increasing its bandwidth to a 150-200 kHz against previous 80-100 kHz.

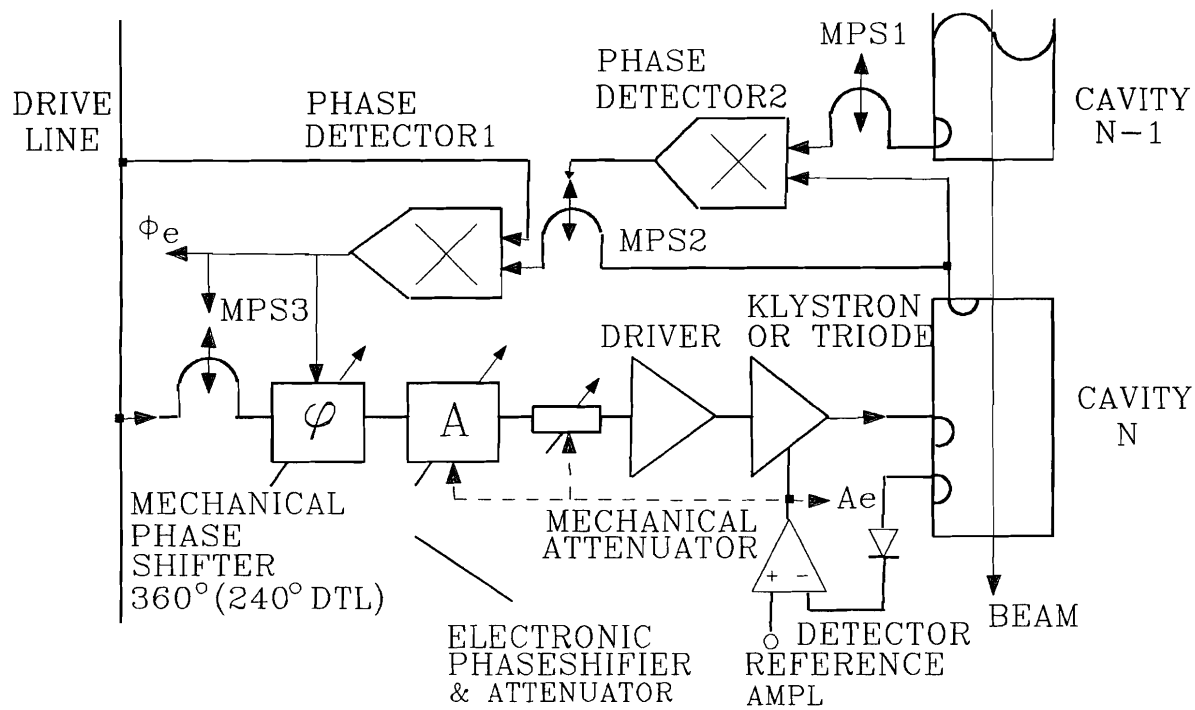

Figure 1: Physical Layout.

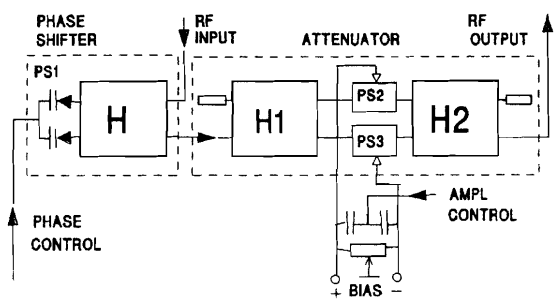

Figure 2: Controlling devices.

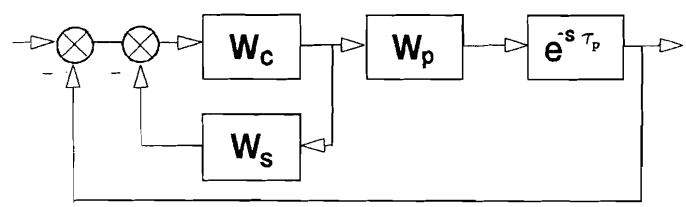

Figure 3: Illustration of the Smith controller.

4 SMITH CONTROLLER

Experimentally measured total signal delays along linac rf feedback loops were about (0.8-1.5) sec which is comparable with cavity time response in DAW part of linac. In this situation a maximum value of feedback loop gain not exceeding 4-5 is quite unsufficient for good beam acceleration. As a mean of improving stability in this case the Smith controllers were used both in amplitude and phase rf feedback systems. A general principle of the Smith controller is based on adding to an usual controller Wc an inner feedback chain Ws, as shown in Fig. 3. A plant (cavity) is described by transfer function $W_p = \frac{K_p}{1+sT_p}$ and delay τ_p. For the traditional Smith controller W_s is

$$W_s = W_p'(1 - e^{-s\tau_p'}) \tag{2}$$

and for "ideal" compensation the conditions

$$W_p' = W_p, \tau_p' = \tau_p \tag{3}$$

must be satisfied as it follows from expression for closed loop transfer function:

$$W = \frac{W_c W_p e^{-s\tau_p}}{1 + W_c W_p' + W_c(W_p e^{-s\tau_p} - W_p' e^{-s\tau_p'})} \tag{4}$$

Theoretical and experimental investigations of the controller have shown that exact fulfillment of conditions (3)

is not necessary. Moreover, it is possible to achieve considerable improvements with respect to an "ideal" controller under definite relations between parameters of the controller and the cavity.

Simplified schematic of the designed Smith controller is shown in Fig.4. Its transfer function is

$$W_s = \frac{K'_p}{1 + sT'_p}(1 - e^{-s\tau'_p}) \qquad (5)$$

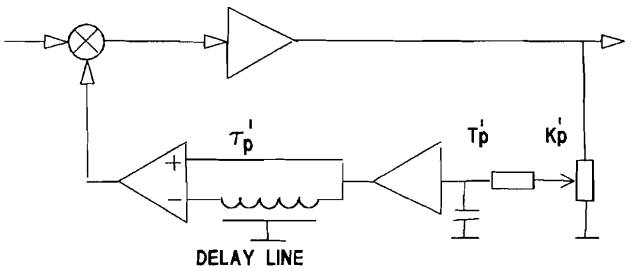

Figure 4: Simplified schematic of the Smith controller.

In practice optimal parameters of the controller for MMF linac are $\frac{T'_p}{T_p} \approx 0.1 - 0.2$ and $\frac{\tau'_p}{\tau_p} \approx 0.6 - 1.0$ providing a factor of three or more improvement in closed loop gain with respect to the "ideal" Smith controller without deterioration of system dynamics.

5 BEAM LOADING COMPENSATION

Traditional feedforward scheme for beam loading compensation when a signal from beam current monitor transmitted to the controller of each cavity [2] possess a few lacks. In particular, it is not always possible to ensure the optimum anticipation of compensating pulse for all cavities and to achieve the precise compensation under alteration of rf power amplifier operating point and cavity detuning. A simulated feedforward scheme designed for fine compensation of beam loading is shown in Figure 5. It based on an automatic control of the height of a correction pulse produced by time- and shape-adjustable pulse generator G. The scheme is autonomous for each cavity. An automatic control is produced with respect to the beam loading signal B_e which is measured by two sample and hold schemes SH1, SH2 on the signal of amplitude A_e (or phase Φ_e) error of feedback system (see Fig.1). SH1 sampled the signal right before beam occurred, SH2 do the same when a beam already present. Beam loading signal B_e is formed after subtraction of two held signals. After integration it control the height of correction pulse so that B_e would be equal to zero.

Thus, the simulated feedforward scheme with closed feedback provides independently for each cavity anticipation of correction pulse and very precise steady-state compensation of a beam loading even in a case of an rf power amplifier operating point drift and cavity detuning.

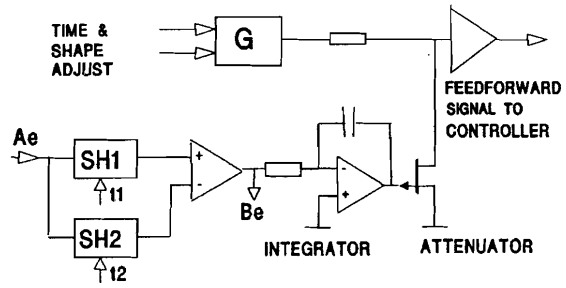

Figure 5: Simplified schematic of the simulated feedforward loop.

6 REFERENCES

[1] K.I.Guseva, A.I.Kvasha, B.P.Murin, Yu.F.Semunkin and N.A.Shetinina. Systems of RF Field Stabilization and Coherent Oscillation Suppression in the Linac First Stage. Los-Alamos Report, LA-TR-77-90, 1977.

[2] R.A.Jemeson and J.D.Wallace. Feedforward Control of Accelerator RF Fields. IEEE Transac. Nuclear Science, V.NS18, No.3, p.598-600, 1971.