EXCAVATION OF THE LEP MAIN TUNNEL BY TUNNEL BORING MACHINE AND EXPLOSIVES

C. Laughton
European Organisation for Nuclear Research
European Laboratory for Particle Physics
Geneva, Switzerland

ABSTRACT

The Large Electron Positron (LEP) collider, at present being constructed by the European Laboratory for Particle Physics (CERN), is located adjacent to existing laboratory facilities in the bedrock strata of the Leman Plain and Jura foothills. This paper describes the techniques used to excavate the main tunnel.

INTRODUCTION

The collider is to be installed in a 26.6 km long quasi-circular tunnel and cavern complex and is designed to provide sub-nucleic particle collisions at high energy levels of up to 50 GeV. The results of these high-energy collisions, initially between electrons and positrons, will be observed in four experimental zones sited around the machine periphery (see fig. 1).

The site was chosen to optimise the technical and engineering feasibility of the construction, and minimise environmental impact. The main design parameters which dictated the choice of site were : to incorporate existing CERN installations into the project network, in particular to allow particle transfer from the existing Super Proton Synchrotron (SPS) accelerator ring, to limit excavation in unfavourable ground media and to site the shaft access and surface installations in areas of low population.

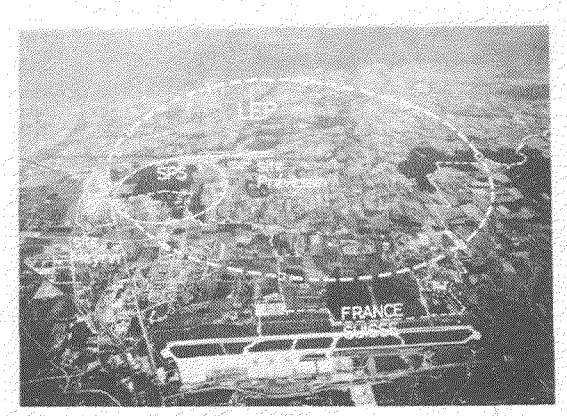

Fig. 1 AERIAL PHOTO OF LEP

MACHINE LAYOUT

The Main Tunnel with a 3.80 m nominal finished diameter (cross-section, see fig. 2) consists of eight circular arcs and eight straight sections, within which the particle collision points are positioned. To reduce the length of excavation in the limestones formations, the maximum depth of the tunnel below ground level, and thus possible water pressure under the Jura massif, and to avoid excavation of moraine deposits for the tunnel and underground hall construction, the tunnel plane is slightly inclined at a gradient of 1.43%, the base point of the structure being situated at a point 1150 m NE of Point 8.

At the eight intersection points, access to the ring will be provided by shaft or by shaft and tunnel : at Points 2, 4, 6 and 8 are sited the initial experimental halls and associated structures, housing the machine services

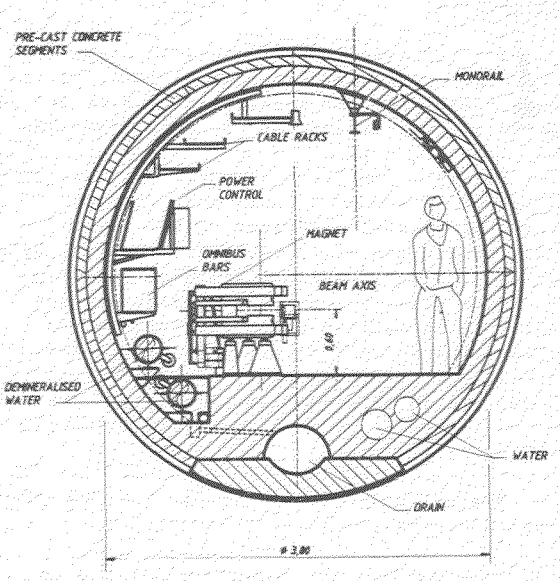

Fig. 2 - CROSS SECTION OF THE LEP MAIN TUNNEL

and providing liaison between workings (see fig. 3). Close to Point 1, where LEP will connect with the SPS system, two injection tunnels have been excavated to link the two complexes and allow particle transfer.

Hoisting buildings at the shaft heads provide access to the machine and experiment halls at each intersection point. Three of the hall complexes have three vertical shafts with finished diameters of 9.10 m (for machine access); 10.10 m (for experiment access), offset from the main hall and 5.10 m (for personnel access). Points 1 and 2 have two shafts each, 2 x 9.10 m dia. and 1 x 9.10 + 1 x 23.0 m respectively. Three shafts were excavated to assist the civil engineering and installation work. At Points 3, 5 and 7 access will be provided by shaft (dia. 7.10 m); at these points connecting galleries and junction chambers will be constructed at the main tunnel intersections.

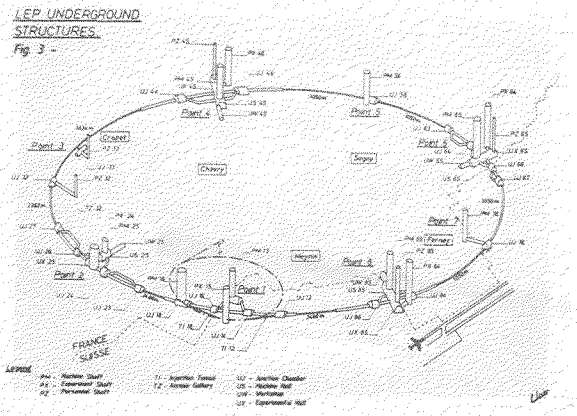

SITE GEOLOGY

The LEP tunnel and associated structures are mainly sited in the bedrock strata of the Leman Plain, and for a distance of some 2.5 km in the eastern extreme of the Jura mountains.

Molasse, the plain bedrock, consists of an irregular series of marl and sandstone strata of varying thickness (0.1 - 3.0 m); these strata are overlain, unconformably, by a series of glacial moraine deposits (see fig. 4). These deposits, often aquifers, are consistent with neither depth nor horizon and presented a variety of problems during the initial shaft sinking phase of the project. A combination of diaphragm walling and freezing was necessary to effect excavation below the deep water-tables.

The different facies of the Molasse correspond to the following descriptions :

- Quartzo-feldspathic sandstone, bedded in thicknesses of approximately 1.0 to 1.5 m and of massive aspect. The cementation of these beds is highly variable and can change within the same strata; in general, the

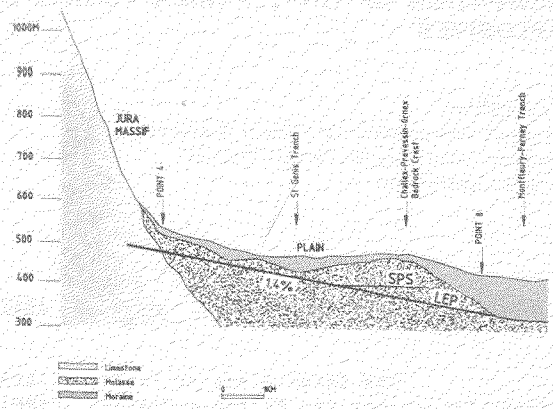

Fig. 4 - Simplified Geological Section.

cementation is fairly poor, notably in the larger grained sandstones, where the rock is friable.

- Marls, of relatively high clay content, possessing slicken, striated, fracture surfaces, generally orientated at 20 or 30 degrees to the horizontal. In the vast majority of cases, the fractures are closed, occasionally being filled with a soft argillaceous or calcitic material. These consolidated marls alter in the presence of air or water and rapidly loose their mechanical strength.

- Sandy marls represent the intermediate facies between the sandstones and marls. They are generally poorly stratified and less sensitive to alteration than the marls.

Geotechnically the rock support problems are almost exclusively associated with the relatively weak marl strata. Although not normally very thick, these bands occur frequently and at varying heights within the rock excavations. They are sensitive to alteration; hydration or desiccation of the surface occurring and swelling, at depth, is possible in saturated zones. Owing to the unpredictable occurrence of these bands during excavation, temporary support mechanisms were systematically installed for all the underground openings.

In general, the Molasse represents a good tunnelling medium for excavation by mechanical means, the majority of uniaxial compressive strengths resting in the range from 8 to 25 MPa (see fig. 5). It shows large-scale homogeneity, over the area of concern to the Project, and has extremely low permeability, (less than 1 x 10-7 m/s). Oil and methane (hydrocarbon products of the Molasse) inflow has been encountered in the coarser grained sandstones, but the rock strata is, in general, unsaturated, containing intersticial water only.

Charact.	Units	Marls	Marl/Sst.	Sst. Coarse	Sst. Cmpt.	Molasse (Plain Ave.)
R.Q.D.	%	70-78	80-95	85-95	95-100	86.7
Bulk Density	kN/m3	24.5	25.4	23.9	26.1	25.3
Permeability	10^{-7}m/s	<0.1	<0.1	0.1	<0.1	<0.1
U.C.S.	MPa	3.3	9.4	9.6	22.3	12.75
U.T.S.	MPa	0.50	1.52	1.06	2.13	1.41
E (tang)	MPa	225	820	1260	2790	1443
Occurence (Global Ave)	%	20	30	10	40	---
Ave bed thickn.	m	1.10	1.14	1.15	1.53	1.27

Fig. 5 - GEOTECHNICAL CHARACTERISTICS OF THE MOLASSE LITHOTYPES.

A series of boreholes and electrical soundings were made in the Plain to provide detail on the geotechnical characteristics of the glacial moraine overburden, Molasse and, above all, the position of the rockhead. Geophysical prospection by aerial infrared and radar photography, was performed and gave a precise insight into the hydrogeological network of the region. Investigations carried out in the Plain led to the decision being taken to orientate the tunnel so as to avoid excavation in the glacial moraines.

Whereas the rock mechanics characteristics of the Molasse were already well known, as underground works, in particular the SPS, had previously been excavated in this material, those of the Jura were far from evident and a comprehensive site investigation programme was undertaken to confirm the geology and define the hydrological and geotechnical characteristics of the rock mass at depth.

A series of boreholes was drilled from the surface, one of which was sunk to over a thousand metres, to determine the conformity and nature of the Jura massif. The borehole investigations were complemented by the driving of an exploration tunnel of 3,8 m diameter, excavated by a Robbins full-face Tunnel- Boring Machine (TBM). This tunnel was driven from the Plain bedrock through the unconformity, into the limestone strata of the Jura; it enabled the nature of the contact zone between the two rock formations to be examined in detail and allowed the in-situ conditions in the limestone strata to be assessed more accurately. The tunnel itself was implanted so as to provide access during the excavation stage and, once the LEP machine is operational, it will accommodate the Main Tunnel service supply.

The rocks intersected within the mountain formation are mainly limestones with some marl interbedding and one of the Cretaceous and Jurassic periods; they were found to contain an important aquifer, the principal spring line of which appears at the base of the slope between 500 and 600 m ASL, at the contact between the limestone formations and the Molasse. In general, within the piedmont strata, the rock quality and structural competence, as surmised from the site investigation, were good to excellent (CSIR values) see fig 6. There exist, however, within the limestones, karstic phenomena, fault and fracture zones, which were found to be partially or completely filled with relatively unstable sand/silt or clay material.

Charact.	Units	Hauterivian and Upper Valanginian			Lower Valang.	BERRIASIAN			PURBECK	
		Red-Lst	Lst-Marl	Marl	Bst-Marble	Corraterie Beds Lsts	Lst-Marl	Thoiry Lst	Lst	Marl
R.Q.D.	%	52-90	40-74	40-74	60-96	72-95	41-86	68-97	98	75-94
Bulk Density	kN/m3	26.4	25.5	23.7	26.9	26.7	25.3	26.9	26.7	25.7
Permeability	m/s	1.2×10^{-7}	0.9×10^{-7}		0.1×10^{-7}	upto 2×10^{-4}		1.5×10^{-5}	1.3×10^{-6}	
U.C.S.	MPa	66	33	5.4	145	93	20	130	110	17,0
U.T.S.	MPa	6.2	4.3	0.7	7.7	6.9	2.5	8.2	10.3	---
E (tang.)	MPa	21800	4200	---	41300	27000	5000	40000	27900	5100
Length of Passage	ml	350			120	430		1170	560	
Strata thickn.	m	40		5	15	35		25	30	

Fig. 6 - MAIN GEOTECHNICAL CHARACTERISTICS OF THE JURA STRATA

These faults are normally subvertical, either lying at right angles or parallel to the main tunnel axis.

Owing to the presence of these unstable zones, lying at depth (100-150 m) below the watertable, the idea of using a TBM to perform the main tunnel excavation in the Jura was abandoned. Preference was given to conventional drill and blast techniques where the performance of auxiliary works, necessitated by the changing in-situ conditions, grouting and rock support would not be hampered by the presence of a full- face machine.

THE MAIN TUNNEL

In the molasse strata of the plain, the Main Contractor, Eurolep, an International Consortium (Fougerolle (F), Philipp Holzmann (W.G.), Entrecanales y Tavora (Sp), Rothpletz Lienhard (CH), Impresa Astaldi (I)), employed three Wirth fullface TBMs to excavate the main tunnel. The Contractor in the Jura, GLLC (Locher (CH), C.S.C. (CH), Chantiers Modernes (F), Intrafor- Cofor (F), Baresel (W.G.) and Wayss-Freytag (W.G.)) used conventional drill and blast techniques for all the excavation work.

Excavation In The Molasse

CERN had previously used TBMs to excavate an 8 km tunnel (SPS) in the Molasse. The rock lends itself to excavation by mechanical means, being relatively soft, of low abrasivity, and self- supporting prior to the installation of support mechanisms, the one exception, as previously mentioned, being the occasional occurrence of thin bands of weak marl (1-2 MPa) particularly susceptible to alteration, which, in the roof section, could produce bed separation and failure, under simple "beam loading". The presence of these weak, fractured beds in the Molasse led to the selection of double shield TBMs. A second shield was incorporated so that a precast concrete segmental ring could be erected inside the machine, thus avoiding all direct contact with the rock (see fig. 7).

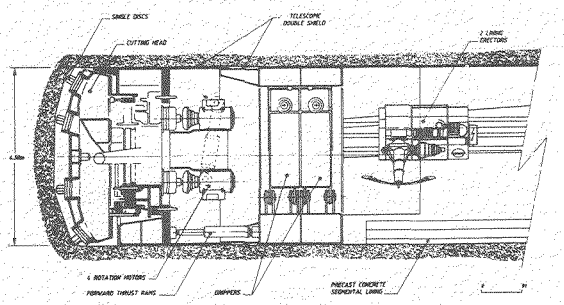

Fig. 7 DOUBLE SHIELD WIRTH TBM - SIMPLIFIED LONGITUDINAL SECTION

The set of segments consisted of four light roof sections (10 cm thick) and an invert element. In practice, this method was abandoned owing to the difficulty in supporting the concrete ring against lateral deformation once it was no longer supported by the second shield. It was preferable to erect the ring directly against the excavation walls, a supplementary element being added to the original set of five to increase the lining's effective circumference. Full-contact grouting was practiced in both cases to minimise alteration of the excavation surface and distribute rock loads more evenly onto the lightly reinforced segments.

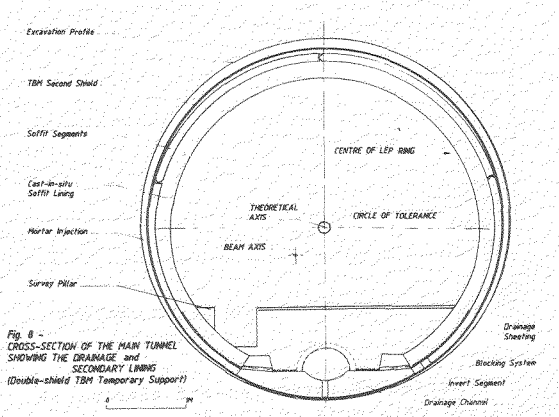

Fig. 8 - CROSS-SECTION OF THE MAIN TUNNEL SHOWING THE DRAINAGE and SECONDARY LINING (Double-shield TBM Temporary Support)

The third TBM, which was brought in to accelerate the Works programme, was of a different design, see fig. 9. The cutting head and mucking systems were similar to those of the other two machines, but the temporary support was achieved by a combination of wire-mesh, light steel roof-arches, swellex rock-bolting and shotcrete (nominal thickness 7-10 cm). The spacing of the arches varied according to the roof conditions; in the weaker roof zones, the spacing was reduced from 90 cm to 50/60 cm. Shotcrete was applied between 15 m and 30 m behind the head in the footwalls and vault respectively (see fig. 10). For all three TBMs the reinforced invert segment was used to give a rolling foundation for the TBM platform and rail anchorage.

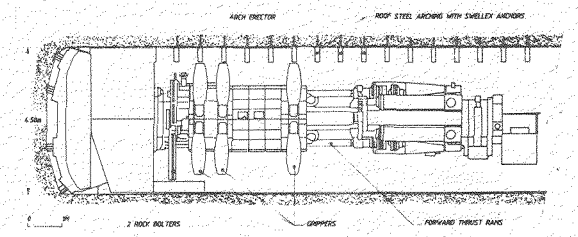

Fig. 9 - "OPEN" WIRTH TBM - SIMPLIFIED LONGITUDINAL SECTION

The three TBMs used in the main tunnel drives, were designed to excavate the 4.5 m diameter tunnel on a maximum upward gradient of 1,43% and minimum radius of curvature of approximately 3000 m. The theoretical performance, a cutting advance rate of 5.4 m/h, was obtained and surpassed during the excavation cycle of the drives. The rates of advance were limited by the performance of back-up work, in particular the lining placement and mucking operations. The double shield machines, which were

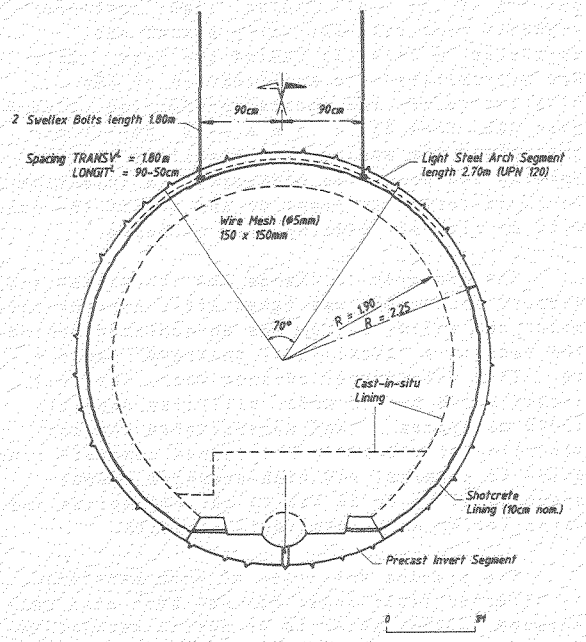

Fig. 10 - TEMPORARY SUPPORT OF THE MAIN TUNNEL BY ROCK BOLT AND SHOTCRETE (Open TBM)

used to excavate 16 km of the main tunnel, advanced at average daily rates of approximately 25 m. The third machine, which began excavation at the end of 1985, averaged over 20 m/day, once the teething problems, mainly associated with the application of the shotcrete had been surmounted.

The cutter configuration for the three TBM heads was identical (32 single and 8 centrally aligned discs). The main difference was noted in the installed forward thrust power, which, as would be expected, was greater for the double-shield machine.

The underground spoil from the face to the wagons was handled by a series of overlapping conveyor belts. Wagon interchange was performed using a translation table and an automatic handling system which meant the train could be moved without locomotives being used (see fig. 12).

Machine type	Double-shield TBM	Classic	Units
Total Installed Power	890	900	kW
4 Head motors - Power	528	580	kW
4 Head motors - Torque	612.14	692.75	kN.m
Rotational Speed	7.36	7.36	Cycles/min.
Gripper Force, max.	20.95	20.51	MN
Forward Thrust, max.	12.64	7.76	MN

Fig. 11 - TBM MAIN MECHANICAL CHARACTERISTICS.

Each train consisted of five Mulhauser side- tipping wagons of 8 m3 capacity. The wagon volume allowed a TBM advance of 1,20 m, corresponding to the length of one segment pass. Three auxiliary wagons were added for the transport of personnel, concrete segment and utilities. The train hauled for distances of over 6 km to reach the base of the mucking shaft.

Excavation Under The Jura

Conventional drill and blast techniques were used to drive the main tunnel in the Jura piedmont contract (see fig. 13). As previously stated, within the limestone, ground conditions varied considerably, the rock mass containing faulted or heavily fractured zones in which karstic activity is evident.

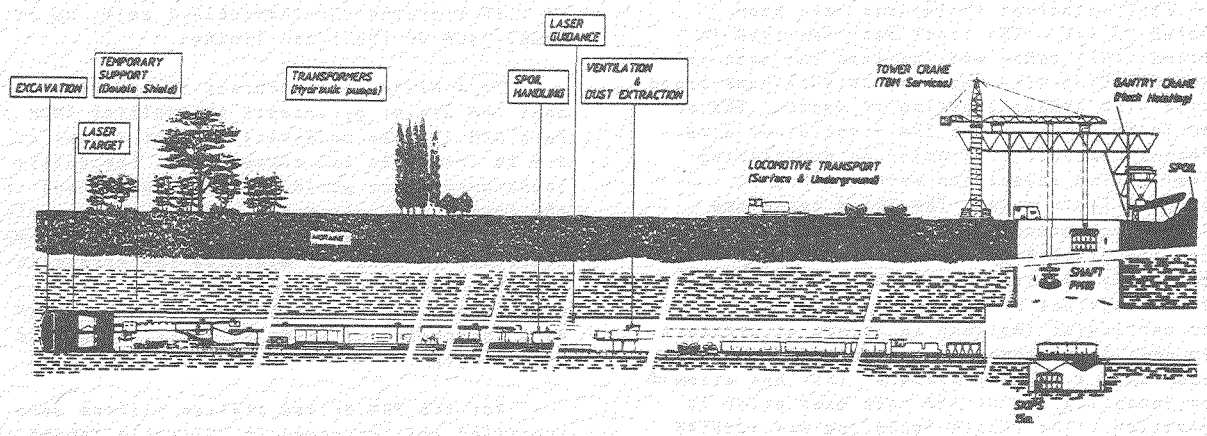

Fig. 12 - SCHEMATIC REPRESENTATION OF THE TBM AND BACK-UP SERVICES

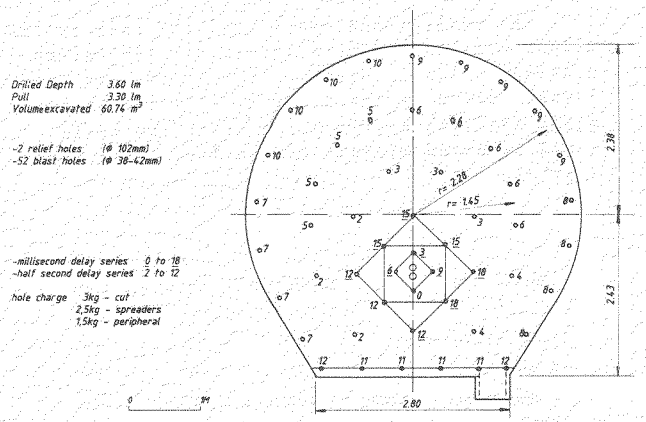

Fig. 13 - TYPICAL BLASTING PATTERN, AS USED FOR THE EXCAVATION OF THE MAIN TUNNEL IN COMPETENT LIMESTONES (Jura contract)

These zones required the use of auxiliary support and grouting operations, a more flexible excavation means than that offered by TBM excavation was selected to facilitate plant movement and installation at the face. The drill and blast rail mounted drivage plant consisted of a 3-boom Atlas Copco hydraulic Jumbo, Conway loader and Hagglund wagons excavating a horseshoe profile of approximately 4,8 m roof diameter to give a 3.1 m pull. Rock support is normally provided by occasional bolting and the application of a light shotcrete lining (5-10 cm).

The water inflows encountered during excavation have risen in some places to over 100 l/s and an hydrostatic head of up to 130 m has been recorded. The solids content has been high, giving the impression that a "flushing out" of the karstic networks has taken place, probably from the rockhead downwards. Reinforcement rings and injection have been used to restrict water inflows, preserve the surface hydrological characteristics and completely block the arrival of solids

Four injection techniques have been adopted so far. The first has been used in limited fault zones and involved the near surface injection of a swelling polyurethane based resine with cement grouting at depth. The second technique involved the creation of a reinforced concrete ring prior to undertaking consolidation injections within a highly fractured fault zone. The third technique allowed high-pressure injection in front of the face; the pilot holes, which are drilled systematically to give a cover of between 20 and 120 m in advance of the drive, were used in this particular instance to inject at pressure when open fault zones were identified. Although only a primary measure, this has allowed some consolidation of the rock mass prior to excavation. The fourth technique was adopted after passage into a prolonged length of fractured rock in proximity to the limestone-molasse transition zone. Heavy faulting was detected and to ensure the medium-term stability of the rock complex, prior to the pouring of the final lining, light cast-iron segments were systematically placed and concreted-in directly behind the face. This has necessitated the modification of the blasting rounds and reduced production rates by over 60%, from 25 to 10 m a week, but it has guaranteed the medium term stability of the opening and permitted high-pressure injection to be performed in front of and behind the face with no risk of inducing rock collapse.

The decision to change the excavation and support techniques was taken after considerable water and solids inflow was encountered behind the face in a "karstically enlarged" fault zone. This interrupted advance work, the rail access being buried under silt/clay deposits (2000 m3 approx.), and necessitated the construction of a heavily reinforced concrete ring prior to chemical and high-pressure cement grouting at up to 30 bar to cut-off solids and water inflow and consolidate at depth.

The precise detection of such karstically affected fault zones has not been straightforward, either prior to or during excavation, as the charged water inflow increased with time owing to the washing out of the fill material. The use of explosives also aggravated the situation having initiated "internal erosion" within the karstic passages. For these reasons it was considered preferable to support and inject the limestone strata systematically in the fault zone, of 300 m length, rather than risk possible deterioration of the tunnel walls after excavation and before placement of the in-situ lining, as would have been possible if rock support had been kept to a minimum.

Guidance System

The maximum allowable displacement of the excavated tunnel from its theoretical axis is 8 cm, this tolerance being given to accommodate errors in the survey traverse and those caused by operational deviation of the tunnelling machine or placement of the drill round, but still allow a minimum internal clearance radius of 1.80 m around the theoretical axis, up on completion of the final lining.

To achieve this accuracy of tunnel alignment the use of gyroscopic theodolites (MOM and Kern GAK II) was necessary. Shaft access at 3.3 km intervals and conventional theodolite techniques alone would not have guaranteed that the tunnel excavation kept within the specifications. The independent True North bearing was necessary in order to minimise the errors inherent in "open traverse" surveying. In the main tunnel, survey stations were erected at 40 m intervals and laser guidance orientated accordingly.

For the TBM drives station pillars were installed and "surveyed-in" directly behind the mucking platform. The laser, once in position, was aligned and picked up by a laser-sensitive target, mounted directly behind the head of the TBM.

Machine guidance was achieved by use of the "ZED" system. The system provided continuous readings on the machine attitude; slew, roll, look-up and horizontal-vertical deviation. In addition the ZED programme could predict future deviations on the basis of the present TBM position, thus correction of the machine alignment was possible before excavation.

Despite the added complexity of driving a circular tunnel the positional accuracy achieved was very high, all seven TBM breakthroughs were achieved to an accuracy of ± 3 cm after "blind" drives of approx. 3 km.

FINAL LINING

A secondary cast-in-situ concrete lining is being placed for the whole length of the main tunnel. This was necessary in the Plain to ensure the long-term stability of the machine, particularly in the invert section, where rock alteration, swelling activity and the lack of a rigid lining could have led to foundation movements and the displacement of LEP apparatus. In the Jura, although the rock was comparatively hard, it was found necessary to place water-proof PVC sheeting and a secondary lining to resist against water pressure and stop water inflow.

In the Plain, a drainage system was placed between the temporary and final linings. Locally, where water or hydrocarbon seepage was noted, PVC sheeting was added to give a waterproof passage, but generally in the vault 50 cm wide bands of drainage sheeting were used. These bands were placed opposite shrinkage joint initiators, which were cast into the main lining. The Plain main-tunnel telescopic shuttering, which gave pour lengths of approx. 40 m, used these V-shaped negatives of 5 cm depth, placed circumferentially at 5 m intervals to localise the creation of shrinkage fractures to the zone where the drainage existed and away from the monorail anchorage inserts. This method proved highly successful as very little fissuration was noted in the mass of the concrete pours and a circumferential fracture occurred systematically at the base of the V-shaped cut.

Drainage was not considered practicable in the Jura as draw-down of the groundwater table, which had provoked considerable environmental discussion during the excavation phase, and the maintenance of a drainage system in a radioactive zone would have proved problematic. Furthermore the grouting, which had been carried out during the excavation stage, was not performed systematically along the length of the tunnel and gave no guarantee as to the long-term watertightness in the surrounding rock mass.

The lining thickness varied according to the excavation and support mechanisms used. In the Jura a 40 cm cast-in-situ lining was used to take rock and full hydrostatic head pressures. In the Plain the secondary lining varied from 20 to 25 cm within the TBM temporary support profiles.

MACHINE INSTALLATION

Installation of the main tunnel equipment (the monorail for transport, the magnets, vacuum system and associated apparatus) began once the first tunnel octant and shaft access had been completed. This will enable the work to be staggered over a longer period, thus keeping the peak manpower requirement to a minimum and reducing the time between final completion of the Civil Engineering Works and commissioning of the machine.

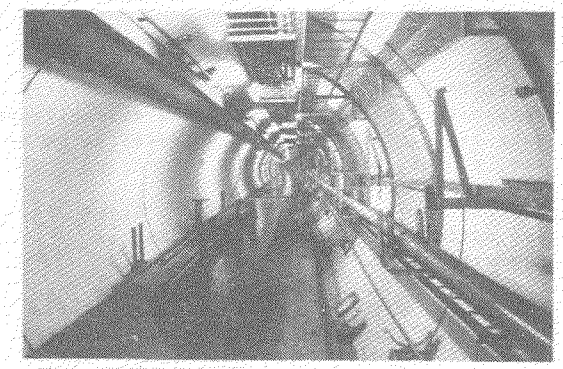

Fig.14 FINISHED LEP TUNNEL

CONCLUSIONS

The excavation of the main tunnel in the Plain by TBM has not presented any major technical problems, neither during the excavation, temporary support or final lining phases. In the Jura the intersection of open fault zones, affected by karstic activity, has necessitated changes in advance and support techniques.

In the Plain the concept of placing the concrete segments within the second shield was abandoned after 300 m of tunnel had been excavated. The various blocking mechanisms (polyurethane mousses) used to limit lateral deformation of the sidewall segment joints failed to provide the necessary rigidity. The full segmental temporary lining as provided by the two double-shield machines, has proved to give better medium-term stability to the opening. Before the secondary lining was placed in the shotcrete sections (open TBM excavation) considerable remedial work was necessary in the invert, where swelling movement was generated (approx. 200 m in 5000 m). In the shotcrete zones the cleaning operations, necessary before the installation of the drainage system and pouring of the cast-in-situ lining, have been considerably more complicated owing to the local deterioration of the shotcrete shell and the presence of shotcrete rebound in the invert section.

In the Jura the decision to use conventional drill and blast techniques appears to have been vindicated by the considerable amount of grouting and support work necessary to perform the drivage in the fault zones (representing over 20% of the effective work time). The use of light cast-iron tubbing is at present allowing a systematic approach to be adopted in the excavation support and injection of the tunnel and as final lining operations are being performed simultaneously, the final completion deadline should be met to allow the LEP experiments to take place from early 1989 onwards.

REFERENCES

1. Amberger G., (1968). La molasse du bassin genevois. Thema : La recherche scientifique dans les hautes écoles et universités suisses, p. 5-8, Geneva.

2. Laporte H., (1984). Le LEP - Grand Projet Souterrain. Tunnels et ouvrages souterrains, No 63, p. 115-122.

3. Leblais Y., (1987). Conception et réalisation des grandes cavités du projet LEP (C.E.R.N.). Work Study Session no. 280. Centre d'étude d'information et de formation pour les ingénieurs de la construction et de l'industrie, Paris.

4. Various Authors, (1984). LEP Design Report. CERN-Publicitas Group - Geneva.

5. Maubuisson J.L., (1987). Mechanical Excavation at the LEP Project for CERN (Geneva). Proceedings of the RETC, Rapid Excavation and Tunnelling Conference, New Orleans.