FPRINT-02-03

Fermilab Library
0 1160 0092421 1

# An Experiment on Local Light Speeds to Test the Gauge and Einstein's Physical Space in General Relativity

**C. Y. Lo**

**Applied and Pure Research Institute**
**17 Newcastle Drive, Nashua, NH 03060**

March 2002

## Abstract

It is shown that Einstein's notion of physical space, that is, a Riemannian space which models reality, is the key to understand Einstein's theory of general relativity. A frequently ignored requirement for a physical space is that all physical requirements must be sufficiently satisfied. It is noted that if the measuring instruments are attached to the frame of reference, since the measuring instruments and the coordinates being measured are under the same influence of gravity, a Euclidean space structure emerges as if gravity did not exist. This Euclidean structure clarifies the meaning of space-time coordinates and Einstein's equivalence principle. Then, it becomes necessary to investigate the actual gauge in reality. It is proposed that the real gauge for the gravity of the globe would be identifiable by measuring the local light speeds. Concurrently, it is pointed out that the belief that space-time coordinates have no physical meaning, is incompatible with Einstein's equivalence principle and observations, but is related to Pauli's version to which Einstein objected as inadequate in physics. It is pointed out that Pauli's version is responsible for the acceptance of intrinsically unphysical Lorentz manifolds as valid in physics. It is shown through a counter example that the local distance formula of Landau and Lifshitz, which is based on Pauli's version, is invalid. Thus, it would be necessary to review theories, which were based on Pauli's version, in terms of Einstein's equivalence principle.

04.20.-q, 04.20.Cv

FERMILAB
MAR 5 2002
LIBRARY

## 1. Introduction

In general relativity [1,2], Einstein models the reality as a Riemannian (to be more precise, pseudo-Riemannian [3,4]) space-time, which is characterized by a space-time metric g that can be determined by the distribution of matter and the motion of the frame of reference. Since $g_{ik}$ is related measurements of space and time, the notion of *physical space was established.*

In Einstein's physical space, not only that space-time is curved (Riemannian), but also that space-time is never empty -- a property that some theorists such as Synge [5] still do not accept. In 1954, Einstein [6] wrote,

> "For the functions $g_{ik}$ describe not only the field, but at the same time also the topological and metrical structural properties of the manifold. ... There is no such thing as an empty space, i.e., a space without field. Space-time does not claim existence on its own, but only as a structural quality of the field."

A physical space, by definition, is non-local although it may not be global as the case of Einstein's uniformly rotating disk. Moreover, since Einstein's Riemannian space-time models reality, *all the physical requirements must be sufficiently satisfied by the space-time metric* $g_{ik}$. This is an important, but often ignored, requirement for Einstein's Riemannian space (-time).

This nomenclature, "physical space" was used by Einstein as if well understood, for instance, in his correspondence to A. Recht [7]. However, the fact is that currently some professional relativists still ask what is a physical space because Einstein's physical space has been incorrectly replaced with a Riemannian space with just the proper metric signature [8,9]. Consequently, many theorists simply do not consider any physical requirement beyond the signature of the metric. This omission of the notion of physical space, *the foundation of general relativity*, is the root of many current theoretical difficulties that lead to invalid theories, including the acceptance of unphysical metric solutions [10]. For instance, Einstein's equivalence principle is applicable only to a physical space, but not an arbitrary Lorentz manifold (see Section 4). Thus, to apply this principle correctly, one must show also that physical requirements are sufficiently satisfied in a Lorentz manifold, as Einstein did [1,2].

One might argue that a physical space has not been defined precisely because the physical requirements have not been defined completely. This analysis shows that such an ambiguity could be a source of misunderstanding, but this notion is probably defined as good as it could be in a physical theory. In fact, Einstein has indicated the difficulty of presenting general relativity "precisely" as mathematics or even in the degree of Maxwell's theory. He wrote in 1916 [1] the following:

> "It is not my purpose in this discussion to represents the general theory of relativity as a system that is as simple and logical as possible, and with the minimum number of axioms; but my main object is to develop this theory in such a way that the reader will feel that the path we have entered upon is psychologically the natural one, and that the underlying assumptions will seem to have the highest possible degree of security."

Perhaps, this psychological approach left too much ambiguity to be imagined incorrectly. Note that, according to Chandrasekhar [11], Eddington cannot find a third person, who understands general relativity. This is supported by Eddington's book [12], where he also criticized Einstein's understanding.

There are some basic differences between mathematics and physics. In mathematics, things have to be defined precisely. However, being guided by reality, physicists define things only to a certain extent and improve their understanding later as further facts are known. For instance, the notion of energy was initially referred to mechanical energy only. Thus, many physical concepts simply cannot be defined as in mathematics, although they can be explained adequately.

In this paper, Einstein's physical space is explained and illustrated further with some examples. To this end, some related concepts must be clarified concurrently. These include Einstein's equivalence principle, Einstein's measurement, covariance, space-time coordinate system, and the notion of gauge. Finally, an experiment on local light speed is proposed to help determining the still unsettled question of a valid physical space (see Section 7).

## 2. The Question of Gauge in General Relativity

In general relativity, the non-linear Einstein's field equation of 1915 version [1,2] for a space-time metric $g_{ab}$ is

$$G_{ab} \equiv R_{ab} - \tfrac{1}{2} R\, g_{ab} = -KT(m)_{ab}\,, \tag{1}$$

where $R_{ab}$ is the Ricci curvature tensor, its source $T(m)_{ab}$ is the energy-stress tensor for massive matter and can depend on $g_{ab}$. However, among these 10 equations of tensor components, only six of them are independent, since

$$\nabla^a G_{ab} \equiv 0. \tag{2}$$

Note also that for $G_{at}$ (a = x, y, z, t), there is no second order time derivative [13,14]. Thus, for eq. (1), the initial condition of a Cauchy problem is restricted by four constraints. Thus, to solve Einstein equation (1), four more conditions are needed.

These four additional conditions are attributed as due to a certain freedom of choice of coordinates in the physical Riemannian space, and are called the gauge conditions. An often-used gauge is the harmonic gauge condition [13,15],

$$\frac{\partial}{\partial x^a}(|g|^{1/2} g^{ab}) = 0 \tag{3}$$

where g is the determinant of metric $g_{ab}$. There are two extreme views on the question of gauge: i) Fock [15] argued that the harmonic gauge is the only physically valid gauge. It will be shown with a counter example (5b) that this is not true. ii) A popular view is that the gauge condition is arbitrary although such a notion was rejected by Eddington [12]. Moreover, it has been shown that this assumption of arbitrary gauge can lead to the acceptance of unphysical solutions [10,16-18].

To illustrate the notion of gauge, let us consider the simple case of a flat metric for a system K in special relativity, i.e.,

$$ds^2 = c^2\, dt^2 - dx^2 - dy^2 - dz^2, \tag{4a}$$

The units are centimeter and second, and c is the speed of light, $3\text{x}10^{10}$ cm/sec. This metric satisfies the equation

$$G_{ab} = 0 \tag{4b}$$

Of course, there are other solutions that satisfy (4b). The specific solution would be determined by the physical conditions involved in the chosen coordinate system. For instance, if the frame of reference of a chosen coordinate system has no acceleration toward K, it can have only a uniform velocity v, which has three components. Therefore, these four conditions determine that the solution is just another flat metric.

For a uniformly rotating disk, Einstein [1,2] considered an inertial system of reference K (x, y, z, t) and a system K' (x', y', z', t') in uniform rotation $\Omega$ relatively to K. The origins of both systems and their axes of z and z' permanently coincide. Then, it can be shown that the metrics of K and K' [1,3] are respectively as follows:

$$ds^2 = c^2\, dt^2 - dr^2 - r^2\, d\phi^2 - dz^2 \qquad \text{where} \quad x = r\cos\phi, \qquad y = r\sin\phi, \tag{5a}$$

and

$$ds^2 = (c^2 - \Omega^2 r'^2)\, dt'^2 - dr'^2 - (1 - \Omega^2 r'^2/c^2)^{-1} r'^2\, d\phi'^2 - dz'^2\,, \tag{5b}$$

where

$$x' = r'\cos\phi', \qquad y' = r'\sin\phi', \qquad r = r', \qquad z = z', \qquad \text{and} \qquad \phi = \phi' + \Omega t\,. \tag{5c}$$

The local time of metric (5b) is t', and the local transformation between metrics (5a) and (5b) is

$$d\phi' = d\phi - \Omega dt\,; \tag{6a}$$

and

$$cdt' = [cdt - (r\Omega/c) r d\phi][1 - (r\Omega/c)^2]^{-1}\,. \tag{6b}$$

Again, four conditions, i.e., the rotation axis and the rotational velocity, determine the metric (5b). Then,

$$\oint ds = (1 - \Omega^2 r'^2/c^2)^{-1/2} r' \int_0^{2\pi} d\phi' = 2\pi r'(1 - \Omega^2 r'^2/c^2)^{-1/2} \tag{7}$$

would be the circumstance of a circle of radius r' (= r) for an observer in K'. Thus, Einstein concluded that with a measuring rod at rest relatively to K', the quotient of circumstances over diameter would be greater than $\pi$, and Euclidean geometry therefore breaks down in relation to the system K'. The harmonic gauge in terms of (x, y, z, t) is satisfied for the flat metric (5a), but is not satisfied for metric (5b). This illustrates that the understanding of Fock on Einstein's theory is incorrect.

Another observation is that once the frame of reference is chosen, the metric and thus the gauge is determined. Nevertheless, for the metric due to an isolated spherically symmetric mass distribution, the gauge seems to still have a freedom (see Section 3). To clarify this question, one must understand first what are the physical meanings of the space-time coordinates. Let us start with Einstein's notion of distance in general relativity.

## 3. Two Kinds of Complementary Distances and the Metric Solutions

In special relativity [1], the four-dimensional continuum (x, y, z, t) of physics has the line element in the special form

$$ds^2 = c^2dt^2 - dx^2 - dy^2 - dz^2, \tag{8}$$

However, although Euclidean geometry is abandoned in the sense of invariance, a Euclidean structure is nevertheless preserved. The spatial distance d ($P_1$, $P_2$) of two points $P_1$ ($x_1$, $y_1$, $z_1$) and $P_2$ ($x_2$, $y_2$, $z_2$) in the frame of reference is still

$$d(P_1, P_2) = [(x_1 - x_2)^2 + (y_1 - y_2)^2 + (z_1 - z_2)^2]^{1/2}, \tag{9}$$

In general relativity, the situation is different since the line element is generally

$$ds^2 = g_{\mu\nu} dx^\mu dx^\nu, \tag{10}$$

where $g_{\mu\nu}$ is a general space-time metric in a Riemannian space. Note that, to obtain a local infinitesimal measurement, (8) is used in (the infinitesimal form of) Einstein's equivalence principle [1]. Thus, form (8) is not abandoned, and what has been abandoned is that form (8) be considered as an invariant. Moreover, although one may not expect to derive formula (9) from (10), in a different way, the Euclidean structure formula (9) is actually also preserved.

To illustrate such a notion of distance, let us consider a solution of metric of S (x, y, z, t) in the isotropic form [13],

$$ds^2 = [(1 - M\kappa/2r)^2/(1 + M\kappa/2r)^2]dt^2 - (1 + M\kappa/2r)^4 (dx^2 + dy^2 + dz^2) \tag{11}$$

where M is the total mass of a spherical mass distribution with the center at the origin of the frame of reference K (x, y, z), $r = [x^2 + y^2 + z^2]^{1/2}$, and $\kappa$ is a coupling constant. Since the metric is a function of r, which is defined in terms of the Euclidean structure E (x, y, z), the Euclidean structure is necessarily included in such a Riemannian space-time of Einstein.

In fact, Einstein [1] made clear that the light velocity is "defined in the sense of Euclidean geometry." However, he did not clarify such geometry in terms of physical measurements (see also Section 6). Currently, many theorists incorrectly claimed that coordinate light velocity has no meaning. Note that that although "Euclidean geometry breaks down [1]" in the invariant line element $ds^2$ (5b), a Euclidean structure is necessarily preserved such that $\phi'$ is well defined in (5c).

If Einstein's equivalence principle is valid, at any point of the frame of reference of K, there is a local Minkowski space with

$$ds^2 = c^2dT^2 - dX^2 - dY^2 - dZ^2, \tag{12}$$

such that

$$dT^2 = [(1 - M\kappa/2r)^2/(1 + M\kappa/2r)^2]dt^2 \tag{13a}$$

and

$$dl^2 = dX^2 + dY^2 + dZ^2 = (1 + M\kappa/2r)^4 (dx^2 + dy^2 + dz^2) \tag{13b}$$

Then, time dilation and spatial contraction are obtained as measured [1,2]. However, the physical meanings of formula (13) and metric (11) are clear only if the meaning of parameter r has been determined.

Now, consider also the Schwarzschild solution of S' (x', y', z', t')

$$ds^2 = (1 - 2M\kappa/\rho)dt'^2 - (1 - 2M\kappa/\rho)^{-1}d\rho^2 - \rho^2 d\theta^2 - \rho^2 \sin^2\theta d\varphi^2, \tag{14}$$

where

$$x' = \rho \sin\theta \cos\varphi, \qquad y' = \rho \sin\theta \sin\varphi, \qquad z' = \rho \cos\theta, \qquad \text{and} \qquad \rho = [x'^2 + y'^2 + z'^2]^{1/2}.$$

M is the total mass of a spherical mass distribution with the center at the origin of the frame of reference K' (x', y', z'). If Einstein's equivalence principle is valid, at a point resting at K', there is a local Minkowski space (dX, dY, dZ, cdT) such that

$$dT^2 = (1 - 2M\kappa/\rho)dt'^2 \tag{15a}$$

and

$$dl^2 = dX^2 + dY^2 + dZ^2 = (1 - 2M\kappa/\rho)^{-1}d\rho^2 - \rho^2 d\theta^2 - \rho^2 \sin^2\theta d\varphi^2, \tag{15b}$$

Then, time dilation and spatial contraction would be obtained as measured [1,2]. Note that the space contraction is directional and no longer isotropic. However, the physical meanings of formula (15) and metric (14) are clear only if the meaning of parameter $\rho$ has been determined. If $\rho$ and r are related by [13]

$$\rho = r(1 + M\kappa/2r)^2, \qquad \text{for} \qquad \rho > 2M\kappa, \tag{16}$$

then metric (11) and (14) are mathematically equivalent. The coordinates K (x, y, z) and K' (x', y', z') are related to the Euclidean coordinate system when M = 0. The clock rates and the spatial contractions of (11) and (14) are related by (16).

As shown above, Einstein's measurement instruments are resting relative to the frame of reference, but in a free fall state. Then, time dilation and space contraction are obtained. On the other hand, for a measuring rod attached to the coordinate system, since the measuring rod and the coordinate are under the same gravity, a Euclidean space structure would emerge as if gravity did not exist. The Euclidean structure obeys distance formula (9) and is independent of the gravity involved. Thus, in general relativity, space coordinates actually have a very clear physical meaning. Then, as Einstein [1,2] pointed out, the time coordinate will be determined by the requirement of representing the local time.

If S is a physical space related to reality, the coordinate systems K (x, y, z) does have the meaning of a Euclidean structure in terms of direct physical measurements. The same arguments would also be applicable to S'. However, metric (11) and metric (14), though mathematically related, have different types of spatial contraction. Thus, only one of S or S' can be a physical space and the two gauges are not equivalent in physics. On the other hand, since r and $\rho$ are the same in the first order approximation, these metrics were not distinguishable experimentally[1)] for the case of gravitational red shifts, light bending and perihelion of Mercury. Fortunately, for the case of local light speeds, metric (11) and metric (14) would be different in first order (see Section 7). Thus, a valid physical space, in principle, can be determined experimentally.

To this end, one must address a current belief is that coordinates have no physical meaning. Such a belief is actually unrelated to Einstein's equivalence principle, but to Pauli's version [20]. Nevertheless, Pauli's version "is now commonly but mistakenly regarded as Einstein's version of the principle [21]" in spite of the fact that Einstein strongly objected[2)] Pauli's version as a misinterpretation [21]. A reason could be that this version is supported and required by unrestricted mathematical covariance that Einstein seemed to argue for in 1916 (see also Section 6).

Although Einstein deleted such arguments in his later book [2], the damage has already been done. Pauli's version and consequently unrestricted covariance were insisted on. The belief that space-time coordinates have no physical meaning was re-

garded as a "standard" theory by some theorists. This mathematical approach has made general relativity become a physical theory often in name only. In addition to leading to logical inconsistence, such a belief disagrees with established physical requirements such as the principle of causality and observations (Sections 4-7). Thus, such a believer not only disagrees with general relativity but also is wrong. Nevertheless, many theorists managed to not seeing such problems.

For instance, based Pauli's version, a formula of local distance (Section 4) was derived by Landau & Lifshitz [22]. This formula was also produced by Liu [23] and Yu [24]. Not only was such a formula not challenged [25] but was used by Zel'dovich & Novikov [3] with great faith. It will be shown with a counter example in Section 4 that such a formula is not valid.

## 4. Differences of Pauli's Version from Einstein's Equivalence Principle

For the convenience of discussion, let us state first Pauli's "equivalence principle" [20] as the following:

> "For every infinitely small world region (i.e. a world region which is so small that the space- and time-variation of gravity can be neglected in it) there always exists a coordinate system $K_0$ ($X_1$, $X_2$, $X_3$, $X_4$) in which gravitation has no influence either in the motion of particles or any physical process."

Thus, Pauli has mistaken a consequence, the existence of local Minkowski spaces, regarded as the equivalence principle itself. In Pauli's version, the equivalence between acceleration and gravity was not even mentioned. Note that, unlike Einstein's physical space, here Pauli's "world region" is only a mathematical notion [20]. Pauli's misinterpretation becomes a serious problem when it leads to the belief that any Lorentz manifold be regarded as valid in physics.

Different from Pauli version, Einstein requires additionally: i) "the special theory of relativity applies to the case of the absence of a gravitational field [1, p.115]" and ii) a local Minkowski space is obtained by choosing the acceleration. Einstein [1, p.118] wrote, "... we must choose the acceleration of the infinitely small ("local") system of coordinates so that no gravitational field occurs; this is possible for an infinitely small region." As pointed out by Fock [15], the notion of acceleration with respect to a three-dimensional frame of reference[3)] is essential in Einstein's theory [1,2].

Moreover, point i) implies that the Minkowski space is the only valid constant metric when gravity is absent. Point ii) implies that acceleration to a static particle must exist. Let us illustrate these points are necessary with some simple examples.

Example 1. Consider a Lorentz manifold L (x, y, z, t) with its constant metric,

$$ds^2 = 4c^2dt^2 - dx^2 - dy^2 - 9dz^2 , \qquad (17a)$$

where time unit is in second and length unit in centimeter. Metric (17a) implies that the "light speed" is 2c in the x-direction.

Mathematically, one can obtain a local Minkowski space (dX, dY, dZ, dT) with the local coordinate transformation,

$$dX = dx, \qquad dY = dy, \qquad \text{but} \qquad dZ = 3dz\,, \qquad \text{and} \qquad dT = 2\,dt\,. \tag{17b}$$

Thus, Pauli's version is satisfied. However, Einstein's equivalence principle is not satisfied since there is no acceleration to choose from such that a local Minkowski space can be obtained. Moreover, special relativity is not applicable in L.

Nevertheless, one might argue that the rescaling, $2t = t'$, and $3z = z'$ would transform (17a) to $ds^2 = c^2dt'^2 - dx^2 - dy^2 - dz'^2$. However, this new metric form does not make L a Minkowski space since the unit of t' is ½ second. Note that a rescaling has no physical content, but the local coordinate transformation (17b) means the ratio of two local clocks [1,2].

Example 2. Consider the Galilean transformation from an inertial system K (x, y, z, t) to the K' (x', y', z', t') coordinates,

$$x = x', \quad y = y', \quad z = z' - vt', \qquad \text{and} \qquad t = t', \tag{18a}$$

where v is a constant. Eq. (18a) transforms the flat metric (1) to another constant Lorentz metric

$$ds^2 = [dz' + (c - v)dt'][-dz' + (c + v)dt'] - dx'^2 - dy'^2. \tag{18b}$$

Thus, Pauli's version is satisfied in K'. However, since (18b) failed "to define time in such a way that the rate of a clock depends upon where the clock may be [1]", according to Einstein, the constant metric (18b) is also invalid in physics.

Now, consider an observer P' resting at a point in K'. Mathematics ensures [1,5] the existence of a local Minkowski space (dX, dY, dZ, dT), the local orthogonal tetrad of P', whose direction $v_{P'}$ is (0,0,0,dt'). Then,

$$dt' = \gamma(dT - v/c^2dZ), \;\; dz' = \gamma^{-1}dZ, \;\; dx' = dX, \;\; \text{and} \;\; dy' = dY, \;\; \text{where} \quad \gamma = (1 - v^2/c^2)^{-1/2} \tag{18c}$$

is the corresponding transformation. Thus, (dx', dy', dz') and (dX, dY, dZ) share the same frame of reference because there is no acceleration or motion. However, there is a spatial contraction and therefore the principle of causality[4)] is violated.

These examples illustrate also that, in Einstein's general relativity, the space–time metric and the frame of reference play crucial roles in the notion of a physical space-time. In Pauli's version, however, because only the metric signature is considered, the question of physical space is ignored [18]. Moreover, if a coordinate-independent physical principle is violated, a Lorentz manifold needs not be diffeomorphic to a physical space [9]. It follows that Pauli's version is intrinsically inadequate in physics [8], and thus would lead to incorrect theories that cannot be remedied.

Based on Pauli's version, Landau & Lifshitz [14], Liu [16] and Yu [17] derived the local distance formula for an arbitrary space-time metric[5]. Their result stated that the final formula for the square of the spatial distance $dl^2$ is.

$$dl^2 = -[g_{\alpha\beta} - g_{0\alpha}\, g_{0\beta}/\, g_{00}]\, dx^\alpha\, dx^\beta \qquad \text{where} \quad \alpha, \beta = 1, 2, 3 \tag{19a}$$

for

$$ds^2 = g_{00}(dx^0)^2 + 2\, g_{0\alpha} dx^0 dx^\alpha + g_{\alpha\beta}\, dx^\alpha\, dx^\beta, \qquad \text{where} \quad g_{00} > 0, \tag{19b}$$

which is part of the inadequate physical condition[5]. The problem of (19) is that $g_{00}$ may not be valid for the local time since only the metric signature is considered in Pauli's version. This uncertainty will be shown with two examples.

For instance, let us substitute transformation (6a) to metric (5a) and obtain the metric,

$$ds^2 = (c^2 - \Omega^2 r'^2)\, dt^2 - 2\Omega r'^2\, d\phi' dt - dr'^2 - r'^2\, d\phi'^2 - dz'^2 \tag{5b'}$$

for the coordinate system K* (x', y', z', t), which also has a Euclidean subspace (r', $\phi$', z'). Note that the mathematical system K* (x', y', z', t) is not a physical space-time coordinate system for the uniformly rotating disk K' because what measured in a resting local clock is time $t'$ but not time $t$ that remains associating with the inertial frame of reference K. From (5b'), Zel'dovich & Novikov [3], based on formula (19), obtains

$$dl^2 = dr'^2 + (1 - \Omega^2 r'^2/c^2)^{-1} r'^2\, d\phi'^2 + dz'^2\,, \tag{20a}$$

and

$$cdt' = cdt - (r\Omega/c) r d\phi' [1 - (r\Omega/c)^2]^{-1} \tag{20b}$$

which agrees with metric (5b). However, according (19), from the constant metric (18b) one obtains

$$dl^2 = dx'^2 + dy'^2 + (1 - v^2/c^2)^{-1} dz'^2. \tag{21a}$$

and

$$cdt'' = cdt + (v/c) dz' [1 - (v/c)^2]^{-1} \tag{21b}$$

Formula (21a) is clearly incorrect for a local distance in the case of no gravity, and t" is not the local time. (21) is related to

$$ds^2 = (1 - v^2/c^2)\, c^2 dt''^2 + dx'^2 + dy'^2 + (1 - v^2/c^2)^{-1} dz'^2, \tag{22}$$

which, though a constant metric, is not the flat metric of the Minkowski space for special relativity.

Mathematically, the derivations of (20) and (21) are identical. However, the physical situations are different. Physically, there is acceleration in the case of uniform rotation, but the Galilean transformation (18a) does not produce acceleration. This illustrates that *Pauli's version* is inadequate in physics. Now, let us clarify Einstein's equivalence principle further.

## 5. Einstein's Equivalence Principle, the Principle of General Relativity, and Riemannian Space

In 1911, the initial form of Einstein's equivalence principle is the assumption [1,26] that the mechanical equivalence of an inertial system K under a uniform gravitational field, which generates a gravitational acceleration $\gamma$ (but, system K is free from acceleration), and a system K' accelerated by $\gamma$ in the opposite direction, can be extended to other physical processes. This initial form was further developed for a curved space [1,2]. However, Einstein's equivalence principle was often questioned because of misunderstanding. Synge [5] professed his misunderstandings on Einstein's equivalence principle as follows:

> "...I have never been able to understand this principle...Does it mean that the effects of a gravitational field are indistinguishable from the effects of an observer's acceleration? If so, it is false. In Einstein's theory, either there is a gravitational field or there is none, according as the Riemann tensor does or does not vanish."

Currently, misunderstanding persists. For instance, Thorne [25] criticized Einstein,

> "In deducing his principle of equivalence, Einstein ignored tidal gravitation forces; he pretended they do not exist. Einstein justified ignoring tidal forces by imagining that you are (and your reference frame) are very small."

Apparently, Thorne did not read Einstein's correspondence with others on this problem of tidal forces since it was clearly answered by Einstein. For instance, in his July 12, 1953 letter to A. Rehtz [21] Einstein wrote,

> "The equivalence principle does not assert that every gravitational field (e.g., the one associated with the Earth) can be produced by acceleration of the coordinate system. It only asserts that the qualities of physical space, as they present themselves from an accelerated coordinate system, represent a special case of the gravitational field."

Einstein [21] explained to Laue, "what characterizes the existence of a gravitational field, from the empirical standpoint, is the non-vanishing of the $\Gamma^l_{ik}$ (field strength), not the non-vanishing of the $R_{iklm}$." and no gravity is a special case of gravity[6]. It should also be noted that Einstein insisted, throughout his life, on the fundamental importance of the principle to his general theory of relativity. Norton pointed out that Einstein's insistence on this point has created a puzzle for philosophers and historians of science [21]. This shows how much was Einstein's principle being understood in terms of physics.

Einstein believes, "The law of physics must be of such a nature that they apply to systems of reference in any kind of motion (principle of general relativity)." Since the effects of a uniformly rotating cannot be equivalent to the effects of a linear

eration, *Einstein's principle of equivalence, if exact, is really the equivalence of the effects of an accelerated frame to a related kind of uniform gravity whereas others incorrectly perceived that any gravity is equivalent to a uniformly accelerated frame.* In other words, Einstein must have realized that his initial equivalence principle illustrated only an idealized case.

These two principles also lead to [1,2] regarding the geodesic equation of the space-time metric $g_{\mu\nu}$,

$$\frac{d^2x^\mu}{ds^2}+\Gamma^\mu{}_{\alpha\beta}\frac{dx^\alpha}{ds}\frac{dx^\beta}{ds}=0, \tag{23a}$$

where

$$ds^2=g_{\mu\nu}dx^\mu dx^\nu, \qquad \Gamma^\mu_{\alpha\beta}=(\partial_\alpha g_{\nu\beta}+\partial_\beta g_{\nu\alpha}-\partial_\nu g_{\alpha\beta})g^{\mu\nu}/2, \tag{23b}$$

as the equation of motion for a particle under the influence of only gravity since the acceleration to a particle under gravity is independent of its mass. Thus, gravity is due to ten metric elements. For a resting particle, the acceleration is due to the Christoffel symbol $\Gamma^\mu{}_{tt}$ ($\mu \neq t$). The geodesic plays an important role because Einstein used it to decide whether the metric is valid in physics. For instance, he used it to obtain the perihelion of Mercury [1,2].

An important but often omitted point is that Einstein's equivalence principle is applicable only to a physical space in which all physical requirements are sufficiently satisfied *since his Riemannian space models the reality*. In deriving his formula for the bending of light rays, Einstein [1,2] used the infinitesimal form of his principle, which is a generalization of the initial form *that the coordinate system has a frame of reference* and requires the existence of a local Minkowski space (dX, dY, dZ, cdT) at any point [1]. The local coordinate transformation to local Minkowski metric along a time-like geodesic curve is,

$$dX^\alpha=\frac{\partial X^\alpha}{\partial y^\mu}dy^\mu \tag{23c}$$

To determine the physical validity of a geodesic, Einstein [1,2] examined both the cause of and the consequence of (23c).

Einstein [27] pointed out, "As far as the prepositions of mathematics refers to reality, they are not certain; and as far as they are certain, they do not refer to reality." No wonder Einstein strongly objected Pauli's version. This philosophy of Einstein has far reaching consequences in physics, and makes him a distinct physicist from other theorists. Thus, an application of a theorem (such as Pauli's "equivalence principle") should be examined for its physical relevance although "one cannot really argue with a mathematical theorem [28]". This will be illustrated in the next section for the case of a rotating disk.

According to the principle of equivalence, the rotating system K' may also be considered as a system at rest, with respect to which there is a gravitational field (field of centrifugal force, and force of Coriolis) [1]. Thus, *the equivalence principle enables an extension of the principle of relativity to accelerated motion, and the principle of general relativity is the physical basis of covariance.* This example illustrates also that Einstein's notion of gravity needs not be related to a source, but can be just related to acceleration (as its cause). For metric (5b), the static acceleration is from $\partial_\mu g_{tt}$ , a spatial derivative to the time-time metric component. This suggests that $g_{tt}$ corresponds the gravitational potential in Newtonian theory, and the equation of motion for gravity is the geodesic equation [1,2]. Moreover, the rotating disk case shows not only that the space-time continuum is a Riemannian space with a Lorentz metric, but also that *the frame of reference need not be a Euclidean subspace.*

## 6. Uniform Rotation and Physical Space-Time Coordinate Systems

In Einstein's theory, it is necessary that both space-time coordinate systems K (x, y, z, t) for a flat space and K' (x', y', z', t') for a rotating system have clear physical meanings. Here, it will be shown that the notion that coordinates have no physical meaning comes from confusing an arbitrary coordinate system (which needs not have a physical meaning) for a mathematical calculation with a space-time coordinate system (which does have a physical meaning) in physics.

In a Riemannian space, since the metric $g_{\mu\nu}$ is not restricted as in special relativity, tensor equations are covariant with respect to any substitutions whatever (generally covariant). Moreover if the space-time continuum in physics is a Riemannian space, there are two advantages: i) Physical laws (tensor equation) would satisfy the principle of general relativity. ii) The calculations can be carried out in an arbitrary coordinate system. In the 1916 paper, Einstein was somewhat carried away by this newfound freedom. Instead of recognizing an arbitrary coordinate system as a mathematical tool, he sought to justify this freedom in terms of physics. To argue for unrestricted covariance, Einstein wrote [1]:

> "That this requirement of general covariance, which takes away from space and time the last remnant of physical objectivity, is a natural one, will be seen from the following reflexion. All our space-time verifications invariably amount to a determination of space-time coincidences. If, for example, events consisted merely in the motion of material points, then ultimately nothing would be observable but the meetings of two or more of these points. Moreover, the results of our measuring are nothing but verifications of such meetings of the material points of our measuring instruments with other material points, coincidences between the hands of a clock and points on the clock dial, and observed point-events happening at the same place at the same time. The introduction of a system of reference serves no other purpose than to facilitate the description of the totality of such coincidences."

However, this would be incompatible with his earlier statement [1], "So, he will be obliged to define time in such a way that the rate of a clock depends upon where the clock may be." Moreover, while all verifications amount to a determination of space-time coincidences, to predict such coincidences theoretically, one must be able to relate events of different locations in a definite manner. (Examples are the gravitational red shifts and the light bending.)

Thus, a coordinate system must be related to objective physical measurements. In fact, as early as 1918, unrestricted general covariance was questioned by Lenard [29]. As Eddington [12] pointed out, "space is not a lot of points close together; it is a lot of distances interlocked." Understandably, Einstein dropped the above invalid justification in his later book [2], and remarked, "As in special theory of relativity, we have to discriminate between time-like and space-like line elements in the four-dimensional continuum; owing to the change of sign introduced, time-like line elements have a real, space-like line elements an imaginary ds. The time-like ds can be measured directly by a suitably chosen clock." Thus, a space-coordinate and the time-coordinates in physics are not exchangeable as Hawking [28] claimed since they have distinct characteristics and physical meanings. Einstein also praised Eddington's book to be the finest presentation of the subject ever written [30].

In Einstein's theory, a physical space (-time) has a frame of reference and local time coordinates. Since (5b') failed "to define time in such a way that the rate of a clock depends upon where the clock may be [1]", and thus metric (5b') together with its coordinates K* is not a space-time coordinate system, as Einstein defined, that can be used for physical measurement and therefore physical interpretation. Although metric (5b') has a Euclidean subspace, it is not a physical Euclidean structure, and is not related to space-time measurements. Since K* is not a physical space, the equivalence principle is not applicable. Moreover, an application of Einstein's equivalence principle would lead to invalid conclusions. In short, for physical considerations, one must have not only just a mathematical coordinate system, but also a physical space-time coordinate system.

A general feature in Einstein's general relativity is that the Riemannian space-time has a Euclidean structure that serves as a frame of reference. Moreover, the Euclidean structure is independent of gravity and thus also the matter distribution. If a spatial measurement is performed with a measuring rod which is attached to the frame K' (x', y', z'), it would appear as Euclidean. Since a measuring rod attached to the system K', would be under the same influence of gravity as what is being measured. Thus, a manifold is physically compatible with the Euclidean structure only if this manifold is a physical space. It is based on this implicit assumption that the cylindrical coordinate system (r', $\phi$', z') is well defined in K' for metric (5b).

With a Euclidean structure, a Euclid-Riemann space shall be called an *Einstein space* named after its creator. However, since a Euclidean structure is meaningful only in a physical space, whose validity in turn must have a Euclidean structure, this seems to have a problem of logical circulation. In practice, one may first assume in priori that a Euclidean structure exists in

the Riemannian "space-time" under consideration. Accordingly, physical requirements are verified to confirm the existence of a Euclidean structure in a physical space. However, if that fails as the case of metric (17a), such a manifold is not a physical space. Thus, the apparent problem of circular logic does not really exist in general relativity.

For a uniformly rotating frame, K' (x', y', z', t') is a physical space that satisfies Einstein's equivalence principle. It will be shown that the time dilation and the spatial contraction are results due to comparisons with a clock and a measuring rod in relatively rest, but at the beginning of a free fall. According to Einstein's equivalence principle, such a coordinate system is locally Minkowski. To verify this, consider a particle P resting at (r', $\phi$', z'). Then, P has the velocity of $\Omega r$ in the $\phi$'-direction, which is denoted by dx". It follows that the Lorentz coordinate transformation is,

$$r d\phi = [1 - (r\Omega/c)^2]^{-1/2} [dx'' + r\Omega dt''] ; \tag{24a}$$

and

$$c dt = [1 - (r\Omega/c)^2]^{-1/2} [c dt'' + (r\Omega/c) dx''] . \tag{24b}$$

Then,

$$r d\phi' = [1 - (r\Omega/c)^2]^{1/2} dx'' ; \qquad \text{and} \qquad c dt' = [1 - (r\Omega/c)^2]^{-1/2} c dt'' , \tag{25a}$$

and

$$ds^2 = c^2 dt''^2 - dr'^2 - dx''^2 - dz'^2 \tag{25b}$$

These are exactly the time dilation and spatial contraction as would be measured.

For the coordinate system K* (x', y', z', t), the question of time dilation is complicated because Einstein's equivalence principle is not applicable. Nevertheless, let us assume that the Einstein's equivalence principle could be applied to K*. Mathematically, for a particle P resting at K*, the state vector of P is (0, 0, 0, dt). According to transformation (5), P is also resting at K' with a state vector (0,0,0,dt'). Then the local Minkowski space for P is identical to (25b). It thus follows that

$$dx'' = [1 - (r\Omega/c)^2]^{-1/2} r d\phi' , \tag{26a}$$

and

$$dt'' = [1 - (r\Omega/c)^2]^{1/2} dt - [1 - (r\Omega/c)^2]^{-1/2} (r\Omega/c^2) r d\phi'. \tag{26b}$$

Thus,

$$dt = [1 - (r\Omega/c)^2]^{-1/2} dt'' \tag{26c}$$

would be considered as the time dilation since a clock rest at K* has $d\phi' = 0$. The problem of this derivation is that the parameter "t" is not the local time for the frame K' (x', y' z'). Thus, a time coordinate alone has no meaning.

Einstein [2] had remarked, "So there is nothing for it but to regards all imaginable systems of coordinates, in principle, as equally suitable for the description of nature. This comes to requiring that:- *The general laws of nature are to be expressed by equations which hold good for all systems of co-ordinates, that is, are co-variant with respect to any substitutions whatever (generally co-variant).*" However, while general covariance is mathematically valid for all tensor equations in a Riemannian space, this description of nature by the coordinate system K* (x', y', z', t) includes certain calculations but not physical interpretations. *Thus, in spite of this general covariance, the freedom toward the physical space-time coordinate systems that can be used for physical interpretation is severely limited by his equivalence principle.* In general relativity, just as in special relativity [1], some mathematical coordinate systems are not physical realizable.

In Einstein's general relativity, the spatial Euclidean structure is retained, the time coordinate is related to a local clock, and a physical space-time is an Einstein space, which satisfies physical requirements sufficiently. Nevertheless, some[7)] still argue that Einstein does not have a monopoly on the theory of physics, and Einstein's version differs from Pauli's only in philosophy. Such an argument manifests that those theorists disregard physical requirements as well as observations. It has been shown that Pauli's version has lead to logical inconsistency, in conflict with established physical requirements such a the principle of causality, and disagreement with observations [9]. Moreover, that coordinates in physics have physical meanings is not limited to Einstein's theory, and is as old as physics. For example, Hawking [28] pointed out, "an arrow of time, something that distinguishes the past from the future, giving a direction to time." Therefore, a time coordinate must be distinct from a space coordinate. A fundamental reason is simply that there are non-scalars in physics.

Moreover, if coordinates have no objective meaning, a tensor component would have no physical meaning unless it can be derived in coordinate free notations, i.e., scalars. On the other hand, a tensor component and a scalar can be numerically equal only for some special coordinate systems. If such a relation of equality is meaningful in physics, the related special coordinate system must have physical meaning. The usage of a physically meaningful coordinate system is necessary because simply non-scalars are involved in physics. Thus, that space-time coordinates have no meaning in physics is actually self-defeating in logic.

## 7. Light Speeds under Gravity and the Michelson-Morley Experiment

It has been shown that space-time coordinates have and must have physical meanings. The frame of reference of a physical space has a Euclidean structure that, except for its transformation property, is just the same as an ordinary Euclidean space. Thus, a coordinate light speed[8)] is meaningful in physics and is measurable. Although Einstein calculated the bending with both the isotropic metric and the Schwarzschild metric [1,2], he only assumed the validity of the equivalence principle.

Theoretically, assuming the isotropic metric (11) to be valid in physics, the local light speed would be isotropic, and

$$\frac{dl}{dt} = \frac{1 - M\kappa / 2r}{(1 + M\kappa / 2r)^3} \approx 1 - \frac{2M\kappa}{r}, \qquad \text{where} \quad dl^2 = dx^2 + dy^2 + dz^2. \tag{24}$$

However, if the Schwarzschild solution (14) is valid, the light speeds would be directional as follows:

$$\frac{d\rho}{dt} = 1 - \frac{2M\kappa}{\rho} \qquad \text{and} \qquad \frac{\rho d\theta}{dt} = \left(1 - \frac{2M\kappa}{\rho}\right)^{\frac{1}{2}} \approx 1 - \frac{M\kappa}{\rho}. \tag{25}$$

Thus, at the surface of the globe, the vertical light speed is different from the horizontal light speed. This means one can use the Michelson-Morley type apparatus to measure the light speeds to determine whether the Schwarzschild or the isotropic solution is more realistic. According to Einstein, the Michelson-Morley experiment is not the foundation of special relativity. This is actually fortunate; otherwise, one would have to make an implicit assumption that the effect due to gravity is negligible.

In the Michelson-Morley experiment, both of the arms are in the horizontal position. Therefore, although the effects of gravity were unavoidably accounted for, there is no speed difference. (Note that Einstein did not justify Special Relativity on the Michelson-Morley experiment.) However, if one arm is horizontal and the other arm is vertical, a speed difference would be detected should the metric be Schwarzschild-type (Appendix). From the experimental point of view, of course, the design for a vertical and horizontal exchange would be more complicated.

## 8. Discussions and Conclusions

In Einstein's theory of general relativity [1,2], a central issue is to find the space-time metric for the physical Riemannian space that models the realistic situation. Since an Einstein's physical space models reality, in such a Riemannian space, all physical requirements must be sufficiently satisfied, and therefore cannot be arbitrary. This means that a space-time coordinate system cannot be arbitrary and therefore mathematical covariance must be restricted by physical considerations. It follows that Pauli's version is inadequate in physics because the existence local Minkowski spaces is only one requirement among many. Thus, the notion of a physical space is really the foundation of general relativity.

An Einstein's physical space (-time) has a frame of reference and a time coordinate for the descriptions of local time in physic [1,2]. However, since the space is curved, the notion of a frame of reference unclear to theorists such as Fock [15] who associated a frame of reference with a flat three dimensional space. Moreover, from this pure mathematical approach, they [15, 31] concluded that Einstein's equivalence principle and the principle of general relativity are invalid [15, 31]. In terms of phys-

ics, however, the frame of reference is also associated with a Euclidean structure, which is independent of the invariant line element of the space-time metric. Thus, the space coordinates have a very clear physical meaning. Moreover, based on the notion of a Euclidean structure, a space-time metric can be found for a uniformly accelerated frame to support Einstein's equivalence principle. Thus, this clarification of the frame of reference also proved that the objection of Fock is actually invalid. Einstein [1,2] has shown through the case of a uniformly rotating disk that, for a given frame of reference, a time coordinate for local time can be determined. Now, it is clear that space-time coordinates have physical meanings.

Currently Pauli's version of equivalence principle is either mistaken as the same as Einstein's equivalence principle for those regarded their work as part of general relativity, or used to replace Einstein's version for those regarded their work as theories of gravitation. A reason of the prevailing of such misunderstandings is perhaps due to that Einstein's equivalence principle has not been explained precisely. Now, with the notion of Euclidean structure, for the first time, Einstein's equivalence principle is explained clearly and precisely. Since Einstein's equivalence principle plays a crucial role in determining the validity of physical space, the notion of Einstein's physical space is also clearer.

It is on this theoretical basis that one can further investigate the realistic gauge for a given frame of reference. For instance, now the physical meaning of the local light speeds has been clarified, it makes sense to measure them directly with, for instance, a Michelson-Morley type experiment. It is hoped that the proposed new experiment would further help clarifying the relationship between the frame of reference and the notion of gauge. Then, it would be possible to verify whether the Maxwell-Newton Approximation [9,32], the linear equation for weak gravity, is directly valid in physics.

Moreover, it is also hoped that, by clarifying some current theoretical misconceptions and confusions, general relativity would progress and renew with added vigor. In particular, Pauli's version, though once prevailing, has been proven as inadequate in physics. It leads to in direct conflict with established physical principles and observations. For example, based on Pauli version, Penrose [33] accepted an intrinsically unphysical Lorentz manifold as valid in physics since such a manifold cannot be diffeomorphic to a physical space [9]. As shown, it can lead to invalid theories. Thus, it is necessary to review theories, which were based on Pauli's version, in terms of Einstein's equivalence principle.

**Acknowledgments**

The authors are grateful for stimulating discussions with Professor P. Morrison n and Professor J. E. Hogarth, and communications with Erick J. Weinberg. This work is supported in part by Innotec Design, Inc., U. S. A.

## Appendix: The Vertical Laser Interferometer Gravitational Experiment

A laboratory light $S$ is focused on a thinly silvered glass plate $P$ which divides the light into two beams at right angle to each other, one of which goes to mirror $M_1$ and is reflected back through the plate to $B_1$ and the other of which goes to mirror $M_2$ back to the plate, and is reflected to $B_2$. The distance from $M_1$ to $P$ is $d_1$, and the distance from $M_2$ to $P$ is $d_2$. The vertical light speed is (c- $v_u$) and the horizontal light speed is (c - $v_h$). $v_u$ can be considered as a constant if the change of r (or ρ) is small in comparison with $R_e$ the radius of the earth. The mirrors take the top position alternatively. When mirror $M_1$ is at the top (or alternatively at the bottom), the time $t_1$ taken by the light to go from $P$ to $M_1$ and back to $P$ is $t_1 = 2d_1/(c - v_u)$, and the time $t_2$ taken by the light to go from $P$ to $M_2$ and back to $P$ is $t_2 = 2\, d_2/(c - v_h)$. Then, the time difference is

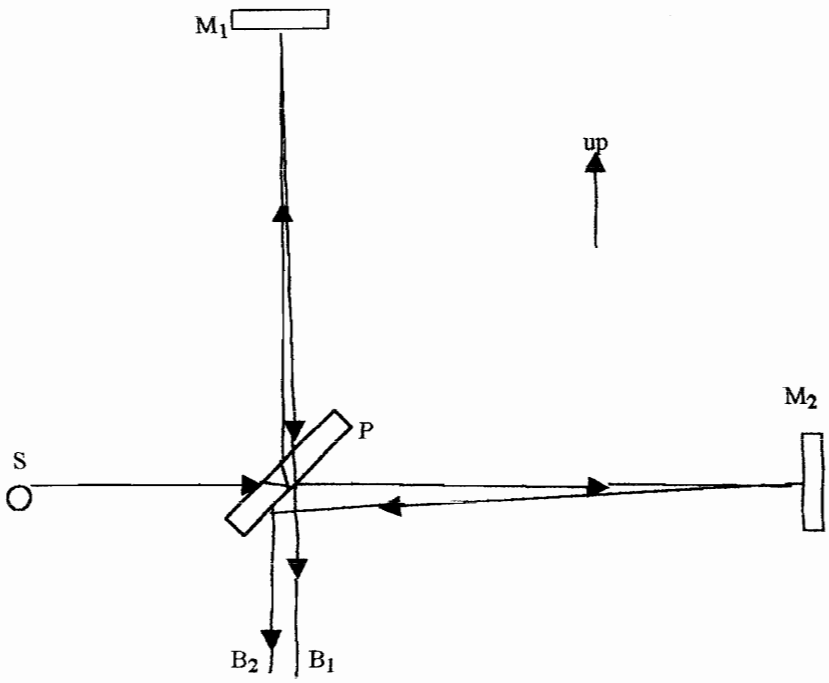


$$\Delta t = t_2 - t_1 = 2\left(\frac{d_2}{c - v_h} - \frac{d_1}{c - v_u}\right). \tag{A1}$$

When mirror $M_2$ is at the top (or at the bottom), the time $t'_2$ taken by the light to go from $P$ to $M_2$ and back to $P$ is $t'_2 = 2\, d_2/(c - v_u)$, and the time $t'_1$ taken by the light to go from $P$ to $M_1$ and back to $P$ is $t'_1 = 2\, d_1/(c - v_h)$. Then, the time difference is

$$\Delta t' = t'_2 - t'_1 = 2\left(\frac{d_2}{c - v_u} - \frac{d_1}{c - v_h}\right) \tag{A2}$$

Then,

$$\Delta T = \Delta t - \Delta t' = 2(d_1 + d_2)\frac{v_u - v_h}{(c - v_u)(c - v_h)} \tag{A3}$$

is the total time difference that corresponds to a distance approximately, since both $v_u$ and $v_h$ are much smaller than c,

$$\Delta d \approx c\Delta T = 2(d_1 + d_2)\frac{\Delta v}{c} \qquad \text{where} \quad \Delta v = v_u - v_h \tag{A4}$$

For the isotropic gauge, $\Delta v = v_u - v_h = 0$. However, for the Schwarzschild solution, we have

$$\frac{\Delta v}{c} = \frac{M\kappa}{R_e} = \frac{8\pi R_e}{8\pi c^2}\frac{GM}{R_e^2} \quad \text{where} \quad R_e = 6.378\text{x}10^6 \text{ meter}, \tag{A5}$$

is the radius of the earth, M is the mass of the earth, and G is the coupling constant in Newtonian theory. Thus, the second factor is 9.8 meter/sec$^2$, and approximately $\Delta v/c = 6.96\text{x}10^{-10}$.

The wavelength of visible light is of the order of 5000 Å. If the expected effect is a fringe shift of about one-tenth of a fringe, then $\Delta d$ should be 500Å [33]. Then, the required total length of the arms is larger than that of Michelson-Morley,

$$(d_1 + d_2) \approx 36 \text{ meter} \tag{A6}$$

However, $v_u$ can indeed be treated as if a constant and distinguishing these two gauges is well within the experimental accuracy. The accuracy of the experiment would increase as the arm lengths increase. Moreover, the effective arm length would increase several times, by causing each pencil to be reflected back and forth between a number of mirrors [1]. Note also that the top, bottom and horizontal alternative positions would help detecting the effects of mechanical stretch and compression.

**Endnotes**

1) In view of (16), the Schwarzschild solution and the isotropic solution actually give slightly different predictions.
2) Einstein's objection made clear that his own version of infinitesimal equivalence principle is distinct from Pauli's.
3) Fock [15] was aware of that Einstein's principle is related to the frame of reference and acceleration. However, Fock related a frame of reference with only a Euclidean space, instead of a Euclidean structure [19] (e.g., $ds^2 = (c^2 - 2U)\,dt^2 - (1 - 2U/c^2)^{-1}dx^2 - (dy^2 + dz^2)$, and $c^2 > 2U(x, t) = 2a\,(x - C) \geq 0$, where $a$ is an acceleration in the x-direction, and C is a constant). Consequently, Fock claimed that Einstein's equivalence principle and his principle of relativity to be invalid.
4) The time-tested assumption that phenomena can be explained in terms of identifiable causes is called the *principle of causality*. This principle is the basis of relevance for all scientific investigations. This principle implies that the gravitational radiation must have sources and any parameter in a physical solution must be related to some physical causes [8,9]. Thus, if an unphysical parameter exists in the metric, such a manifold would not be diffeomorphic to a physical space [18].

5) Landau & Lifshitz [22] is well studied in the West [25]. Based on Pauli's version, the so-called "physical condition" is:

$$g_{00} > 0, \quad \begin{vmatrix} g_{00} & g_{01} \\ g_{10} & g_{11} \end{vmatrix}(-1) > 0, \quad \begin{bmatrix} g_{00} & g_{01} & g_{02} \\ g_{10} & g_{11} & g_{12} \\ g_{20} & g_{21} & g_{22} \end{bmatrix} > 0, \quad \text{and} \quad \begin{bmatrix} g_{00} & g_{01} & g_{02} & g_{03} \\ g_{10} & g_{11} & g_{12} & g_{13} \\ g_{20} & g_{21} & g_{22} & g_{23} \\ g_{30} & g_{31} & g_{32} & g_{33} \end{bmatrix}(-1) > 0 .$$

This inadequate physical condition is satisfied by metrics (5b'), (17a), and (18b).

6) Supporting the view of Einstein, Weinberg [13, p.3] declared, "In my view, it is much more useful to regard general relativity above all as a theory of gravitation, whose connection with geometry arises from the peculiar empirical properties of gravitation, properties summarized by Einstein's Principle of the Equivalence of Gravitation and Inertia."

7) Currently, the question of whether Pauli's version is equivalent to Einstein's has not been settled. Some theorists such as Wald [34], Straumann [4], Liu [23], and Yu [24] believed that they are equivalent. On the other hand, some theorists such as Fock [15] and Ohanian, Ruffini, & Wheeler [31], who believe they are not equivalent, rejected also Einstein's principle of general relativity and called their books a theory of gravitation.

8) Some theorists [23] define light speed as $dl/dt$, where $dl^2$ is defined by the local distance formula (17a). However, unlike the coordinate light speed defined by Einstein [1,2], such a pure mathematical quantity has no basis in physics.

## References


1. A. Einstein, H. A. Lorentz, H. Minkowski, H. Weyl, **The Principle of Relativity** (Dover, N. Y., 1952), pp 115-118, p.162; A. Einstein, Ann. Phys. (Leipig) **49**, 769-822 (1916).
2. A. Einstein, ***The Meaning of Relativity*** (Princeton Univ. Press, 1954), p. 63, p. 87 & p. 93.
3. Y. B. Zel'dovich & I. D. Novikov, **Stars and Relativity** (Dover, New York 1996), pp 7-16.
4. N. Straumann, **General Relativity and Relativistic Astrophysics** (Springer, New York, 1984), pp 97-99.
5. J. L. Synge, **Relativity** (North-Holland, Amsterdam, 1956).
6. A. Einstein, 'Relativity and the Problem of Space (1954)' in **Ideas and Opinions** (Crown, New York, 1982), p. 372, p. 375.
7. **The Collected Papers of Albert Einstein**, ed. Johan Stachel et al., Vol. 1 (Princeton University Press, 1987).
8. C. Y. Lo, Phys. Essays, **13** (1), 109-120 (March, 2000).
9. C. Y. Lo, Phys. Essays, **13** (4), 527-539 (Dec., 2000).
10. D. Kramer, H. Stephani, E. Herlt, & M. MacCallum, ***Exact Solutions of Einstein's Field Equations***, ed. E. Schmutzer (Cambridge Univ. Press, Cambridge, 1980).

11. A. Fölsing, ***Albert Einstein***, (Viking, New York, 1997), p. 444.

12. A. S. Eddington, **The Mathematical Theory of Relativity** (1923) (Chelsa, New York, 1975), p. 10.

13. S. Weinberg, ***Gravitation and Cosmology*** (John Wiley, New York, 1972).

14. N. Hu, D.-H. Zhang, & H. G. Ding, Acta Phys. Sinica, **30** (8), 1003-1010 (Aug., 1981).

15. V. A. Fock, **The Theory of Space Time and Gravitation** (Pergamon Press, 1964), pp. 6, 111, 119, and 228-233.

16. W. B. Bonnor, J. B. Griffiths & M. A. H. MacCallum, Gen. Rel. & Gravitation, **26**, 7, 1994.

17. C. Y. Lo, Phys. Essays, **7** (4), 453 (1994).

18.C. Y. Lo, Phys. Essays, **11** (2), 264-272 (1998).

19. C. Y. Lo, "The Einstein Space of An Accelerated Frame and Uniform Gravity", in preparation.

20. W. Pauli, **Theory of Relativity** (Pergamon, London, 1958), p. 145 & p. 149.

21. J. Norton, "What was Einstein's Principle of Equivalence?" in Einstein's Studies Vol. 1: **Einstein and the History of General Relativity,** Eds. D. Howard & J. Stachel (Birkhäuser, 1989).

22. L. D. Landau & E. M. Lifshitz, **Classical Theory of Field** (Addison-Wesley, Reading Mass. 1962).

23. Liu Liao, **General Relativity** (High Education Press, Shanghai, 1987), pp 26-30.

24. Yu Yun-qiang, **An Introduction to General Relativity** (Peking Univ. Press, Beijing, 1997), pp 63-66.

25. K. S. Thorne, **Black Holes & Time Warps** (Northon, New York, 1994), p. 105, p.456.

26. A. Einstein, Ann. Phys. (Leipzig) **35**, 898-908 (1911).

27. A. Einstein, 'Geometry and Experience (1921)' in **Ideas and Opinions** (Crown, New York, 1982), p. 233.

28. S. W. Hawking, **A Brief History of Time** (Bantam, New York, 1988), pp 24, 50, 87, & 143-152.

29. P. Lenard, Über das Relativitätsprinzip, Äther, Gravitation, (Leipzig, 1918).

30. L. Motz & J. H. Weaver, **The Story of Physics** (Avon, New York, 1989), p. 366.

31. H. C. Ohanian & R. Ruffini, **Gravitation and Spacetime** (Norton, New York, 1994).

32. C. Y. Lo, Astrophys. J., **455**: 421-428 (Dec. 20, 1995).

33. R. Penrose, Rev. Mod. Phys. **37** (1), 215-220, Jan (1965).

34. J. D. Jackson, **Classical Electrodynamics** (John Wiley, New York, 1966), pp. 350-352.

35. R. M. Wald, **General Relativity** (The Univ. of Chicago Press, Chicago, 1984), p. 84-88.