ESO-TP-73A
Jan. 1997
FERMILAB
DEC 23 1997
LIBRARY

Interferometry with the ESO Very Large Telescope

Oskar von der Lühe, Frédéric Derie, Bertrand Koehler, Samuel Lévêque, Francesco Paresce, and Massimo Verola

European Southern Observatory, Karl-Schwarzschild-Str. 2, 85748 Garching b. München, Germany

ABSTRACT

The interferometric mode of the ESO Very Large Telescope (VLT) permits coherent combination of stellar light beams collected by four telescopes with 8m diameter and by several Auxiliary telescopes of the 2m class. While the position of the 8m telescopes is fixed, auxiliary telescopes can be moved on rails, and can operate from 30 stations distributed on the top of the Observatory site for efficient UV coverage. Coherent beam combination can be achieved with the 8m telescopes alone, with the auxiliary telescopes alone, or with any combination, up to eight telescopes in total. A distinct feature of the interferometric mode is the high sensitivity due to the 8m pupil of the main telescopes, with the potential for adaptive optics compensation in the near-infrared spectral regime.

The VLT Interferometer is conceived as an evolutionary programme where a significant fraction of the interferometer's functionality is initially funded, and more capability may be added later while experience is gained and further funding becomes available. The scientific programme is now defined by a team which consists of a VLTI Scientist at ESO and fifteen astronomers from the VLT community. ESO has recently decided to resume the construction of the VLTI which was delayed in December 1993, in order to achieve first interferometric fringes with two of the 8m telescopes around the year 2000, and routine operation with 2m Auxiliary telescopes from 2003 onwards. This paper presents an overview of the recent evolution of the project and its future development.

Keywords: astronomical telescopes, Michelson stellar interferometry, interferometric arrays

ESO-TP-73A

1. RECENT EVOLUTION OF THE VLTI

The scope and status of the VLT Observatory on Cerro Paranal is described elsewhere in this volume (*Tarenghi*[1]). Recent reviews of the interferometric mode (VLTI) in the *Proceedings of the SPIE* (*von der Lühe et al.*[2], *von der Lühe et al.*[3]) summarise the programme in sufficient detail, making a detailed description of its scope unnecessary. We therefore focus on recent events and changes in the concept of the VLTI.

Since the decision by the ESO Council in December 1993 to postpone the implementation of the VLTI, ESO has pursued a Research and Development programme with the aim to develop all necessary designs to assure a fast implementation as soon as funds would become available. One part of the this programme was to establish a committee of astronomers from ESO and the ESO community as well as from abroad who have a background in high angular resolution astrophysics and interferometry. The Interferometry Science Advisory Committee (ISAC) has presently seventeen members, covering all major fields in observational astrophysics. Its charge is to review the development of, to define a key science programme for, and to recommend necessary conceptual changes to, the VLTI. It has convened in May and October 1995 and in April 1996. Its recommendations and resulting consequences are described below.

In view of the progress made in the scientific definition as well as of the growing competition, ESO decided in December 1995 that the time was ripe to reintroduce the implementation of the VLTI into the VLT programme, within funds available at ESO as well as in the community. Since then, we have developed a so-called "New Plan" with a technical scope which is adapted to a limited budget, and a significantly modified technical concept which meets better the scientific needs. The plan was presented to the Science and Technical Committee (STC), who endorsed it. In the meantime, the ESO Council has confirmed its authorisation to the Director General to pursue certain parts of the VLTI, as endorsed by the STC.

Fermilab Library
0 1160 0064855 4

2. SCIENCE GOALS AND REQUIREMENTS

When reviewing its science capability, the ISAC found a wealth of scientific topics which could be addressed favourably or uniquely with the VLTI. Some of them have been described in more detail in the ESO Messenger[4]. To justify its construction, the following key science programs were identified as critical for the VLTI to be able to accomplish:

- Detection and characterisation of low-mass companions to near-by main sequence and pre-main sequence stars, including red dwarfs, brown dwarfs, and potentially planets down to gas giant cores, in order to determine the luminosity and mass function for stellar and sub-stellar populations of different ages and composition
- Imaging of the circum-stellar environment in near-by star forming regions, within 10 AU of the star and with a 1 AU spatial resolution in order to understand the basic stellar and planetary formation mechanisms
- Probing of the central 0.1 parsec of the Milky Way to establish the presence or absence of a central massive black hole, and the broad line regions of near-by Active galactic nuclei in order to test the unified model

It is expected that VLTI can and should contribute significantly and uniquely to all three of these critical areas and to a large number of other worthy programs such as stellar surfaces, circum-stellar regions of AGB stars, novae and supernovae shells.

The top level technical requirements which result from these scientific requirements are summarised as follows:

- The VLTI should acquire first fringes by end of 1999 in order to ensure competitiveness with other interferometry programmes.
- There should be a phased approach to the implementation of the VLTI. The first phase shall include the 8m Unit Telescopes from the start, and shall focus on spectral regimes where telescopes can perform near the diffraction limit with a minimum of adaptive control. The capability, within the budget, to open the spectral ranges towards shorter wavelengths for all telescopes, in particular to the near-infrared regime with Unit Telescopes using higher order adaptive optics systems, shall be investigated.
- Auxiliary Telescopes should have a diameter of order 1.8m as a compromise between cost and sensitivity. Auxiliary Telescopes with a much smaller diameter are not scientifically competitive.
- A field of view for the science target of 2 arc seconds ("primary beam") is sufficient. In order to enable phase referencing as well as narrow-angle astrometry, the capability to do interferometry at a second field position ("secondary beam") within 1 arc minute radius from the science beam shall be included.
- VLTI shall have the capability to simultaneously combine four telescopes, including at least two 8m Unit Telescopes and up to three Auxiliary Telescopes.
- Beam combination instruments shall operate in single mode in the red, near-infrared, and in the mid-infrared with a spectral resolution up to 10.000.
- VLTI should have narrow-angle astrometric capability with the a precision comparable to the atmospheric limit.

3. CONCEPTUAL CONSEQUENCES

3.1. Definition of Wavelength range for Early Phases

Limiting the operational wavelength for the early phases to the near and thermal infra-red has a number of important consequences. The first-light VLTI would not require higher order adaptive optics systems, which considerably reduces system complexity and cost. Atmospheric and instrumental control can be limited to tip-tilt compensation only.

Figure 3-1 shows the resolution attained by the 8m - and 1.8m telescopes on Paranal. The 8m Unit telescopes reach the best resolution for wavelengths above 5 μm under median seeing conditions without any compensation, and are close to the diffraction limit for these wavelengths when image motion is controlled. Likewise, the 1.8m Auxiliary telescopes operate at the diffraction limit for wavelengths above 2 μm. Therefore, early operation with the VLTI will be optimum in the thermal IR (5 μm and longer) with the Unit telescopes and in the near IR (1 μm ... 2.4μm) with the Auxiliary telescopes.

Diffraction essentially limits the suitability of the Auxiliary telescopes for use in the N and Q bands. The implications of doing interferometry with Unit telescopes in the thermal IR need firther investigations. Beam combination will occur after more than 20 reflections at room temperature, so the background is expected to be rather high. On the other hand, the interferometric fringes occur at precisely known frequencies and can be modulated, which substantially facilitates their detection. The consequence may be that the prime observable will be correlated flux, and it will be difficult to calibrate the visibility scale.

3.2. Unit Telescope Coudé Trains

The early use of 8m Unit Telescopes with VLTI requires that coudé optical trains, which have also been delayed in 1993, be re-introduced into the technical and financial concept. Since the use of Unit Telescopes from $H\alpha$ towards longer wavelengths is emphasised, a simpler optical design for the coudé optical trains is under investigation. This design replaces

the large off-axis elliptical mirrors by spherical mirrors. The astigmatism and field scale anisotropy resulting from this change are compensated on-axis by replacing two flats by weak cylindrical mirrors.

An analysis of the modified coudé optics reveals that the on-axis performance is very satisfactory over a large spectral regime, including the visible. The Strehl ratio degrades with increasing field angle. We are less concerned about this because the degradation due to the optical design will always be small compared to the anisoplanatic behaviour of the Earth's atmosphere.

At this time, the plan is to equip two out of the four Unit telescopes with coudé trains. The decision which telescopes to equip will be influenced by many scientific, schedule, and technical considerations. For example, including the first Unit telescope may be less efficient than it appears at first glance, considering that the pressure for observing time will be rather high.

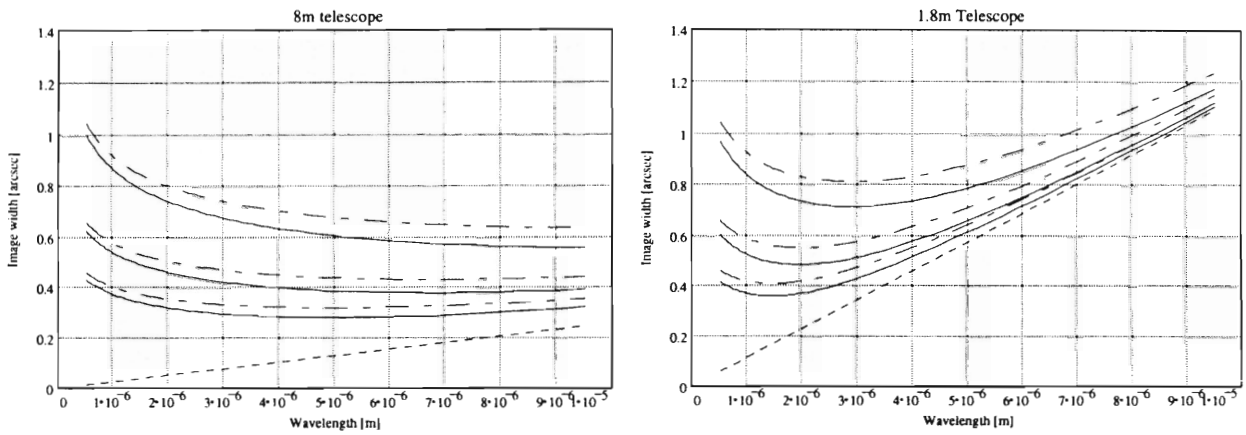

Figure 3-1: resolution of an 8m telescope (left) and a 1.8m telescope (right) with the seeing characteristics of Paranal. The dotted line represents the diffraction limit. The dashed curves are without adaptive control, the solid curves with tip-tilt compensation. The lower pair of curves in each graph show the image width for the best 10% of seeing ($r_{0,550}$ = 22.4cm), the upper pair for the worst 10% ($r_{0,550}$ = 9.8cm), the middle pair for the median seeing ($r_{0,550}$ = 15.6cm).

3.3. Reduction of the continuous field

The reduction of the continuous field of view from 8 arc seconds to 2 arc seconds enables a substantial reduction of the optics in the coudé areas of the Unit Telescopes and in the delay lines. The delay line primary optics had to accommodate beams of up to 40cm in diameter in order not to introduce vignetting within 8 arcsec, this is now reduced to 14cm. Correspondingly, the optics dimensions reduce from sizes of the order of the meter to 50cm. The cost for the delay lines will substantially decrease; this is a key element of the financial feasibility of the new VLTI.

Along with the reduction of the field, the use of the imaging beamcombiner in the laboratory becomes questionable. This system is conceived for a co-phased field of view of 8 arcsec. The scientific rationale behind this concept is not very compelling, considering that reconstructed fields of view are most likely limited by incomplete UV coverage. If there is any use for an extended field, it would be for phase referencing purposes (see next section). Therefore, we do not see a reason to include the imaging beamcombiner anytime soon. Beam combination will be acieved in the first phases within the instruments.

Another consequence of the field reduction is that severe requirements on the lateral stability of the delay line carraige motion can be relaxed substantially, making simpler drive concepts viable.

3.4. Dual Feed

The desire for including narrow-angle[5] astrometric capability into VLTI with Auxiliary telescopes became apparent in 1994 (*Léger et al.*[6], *Quirrenbach*[7]). The original idea to accommodate this capability was to augment the optics for the Auxiliary telescopes (*von der Lühe et al.*[8]). In view of the current changes in the concept we intend to pursue a different approach. The

coudé foci of Unit and Auxiliary telescopes will be equipped with dual feeds which allow to select an off axis source to be fed into the interferometer along with the on-axis source. The range of the selection will be 5 ... 60 arcsec from the axis, this accomodates the complete field at the coudé foci. There will be two (a primary and a secondary) beams propagating towards the laboratory. The beamlines will share the delay lines optics. The concept for the dual feed is still in the works. Although designs for dual feeds exist elsewhere, the requirements for VLTI are not trivial. For example, the requirement for spectral coverage and astrometric precision essentially exclude using transmissive optics.

One beam will propagate the light from the science target. The other one, if used, will propagate the beam of a near-by phase reference (UTs and ATs) or an astrometric reference (ATs only). The concept behind the phase reference is similar to a reference star for adaptice optics; it will serve for image and fringe tracking should the science target be too faint. There are limits to the field angle which come from atmospheric anisoplanatism. Our studies show that the 60 arcsec field radius is suitable for opertaion in the thermal IR.

The requirements and engineering implications of narrow angle astrometry are, on the other hand, very severe and need thorough studies. The atmospheric limits to astrometric precision depend linearly on field angle and amount to about 10μas with a 100m baseline and 30 min of integration. Achieving this precision in practice requires the *knowledge* of the instrumental differential delay between the primary and secondary beam to 5nm accuracy. At this time, the technical limits to determine the differential delay are not known.

3.5. Beam combination and Instruments

The beam combination laboratory area will accommodate instruments, at least for the near and thermal IR, along with a number of other subsystems. Figure 2 shows an overview of the layout. Stellar light beams enter the laboratory from below. A switchyard which consists of dichroic and fully reflective mirrors direct the light towards the instruments and to the fringe and image sensors. A calibration unit which provides various sources also feeds both instruments and sensors and assures intercalibration. Laser metrology beams feed the fringe sensor, as well as the instruments, for internal calibration. Other metrology beams travel back to the telescopes and determine the delay line zero position for the internal path.

Figure 3 shows the central part of the tunnel and the laboratory with some more detail. Primary and secondary beams emerging from the delay line carriages (hatched boxes in the tunnel) are directed towards the laboratory in the upper half. The switchyard is near the center of the layout. Intruments are on the top and right. Fringe and image sensors are to the left. The structure to the lower right is the metrology beam launching system.

According to the recommendations of ISAC, the instruments should have the following capabilities. The near IR instrument should be able to support the combination of four telescopes. It should cover spectralranges from 0.7 ... 4 μm with a spectral resolution up to 10.000. A spatial filter shall be used to assure single mode operation. The instrument should be able to support the dual feed.

The thermal IR instrument should be able to support two to four beamlines. Its spectral range should cover N and Q bands, with possible extension to the M band. Calibration should be facilitated through single mode operation. Fringe detection should occur through temporal modulation.

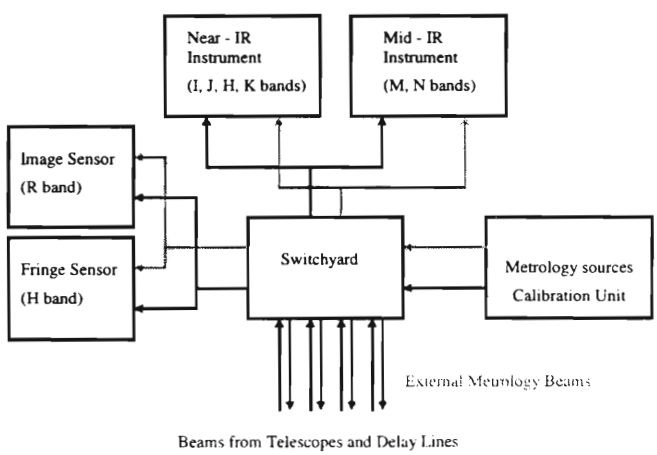

Figure 2: General interferometry laboratory layout.

4. VLTI DEVELOPMENT PLAN

The development of the interferometric mode has to meet several goals. One of them is schedule; the goal is to make first phase interferometry available along with the completion of the Unit telescopes. The second goal is cost in that the first phase development must fit into a reduced budget. The third goal is achieving a certain technical scope. It was clear from the onset that the scope described in more detail below is achievable only with additional funds made available from member countries. The Centre National de la Recherche Sientifique (CNRS) in France, the Max-Planck Society (MPG) in Germany and ESO signed an agreement in 1992 which at that time added a third Auxiliary telescope and delay line to the VLTI development. These partners have recently expressed their desire to continue their commitments with a modiefied schedule in order to accommodate the new developments. An update of the agreement is in the process of being signed.

The available budget forces an implementation in two phases (Phases A and B), the first and most expensive of which is funded. Since Auxiliary telescopes make up a large part of the cost, it was decided to defer the third one to the second implementation phase. Also, because of the long lead times for the Auxiliary telescopes, first fringes will most likely be achieved first with Unit telescopes which will will be highly subscribed. To be able to excercise and test the interferometry subsystems with little impact on Unit telescope time, we intend to use simple siderostats without optical power from Auxiliary telescope stations on bright stars until the time Auxiliary telescopes become available.

VLTI will consist of the following subsystems after the completion of Phase A:

1. Coudé optical trains on two Unit telescopes
2. Two delay lines
3. Two test siderostats, to be replaced by
4. Two Auxiliary telescopes
5. Control system
6. Mid-IR and Near-IR instruments

The following subsystems will be added during Phase B:

1. Third Auxiliary Telescope
2. Coudé optical trains on remaining Unit telescopes
3. Two additional delay lines

Phase A has just begun and is expected to last until the end of 2001 when more or less regular science observations will be conducted. "First fringes" (coherent combination of two Unit telescopes) is expected already early 2000. First fringes with Auxiliary telescopes are expected in the first half of 2001.

The kick-off of Phase B, which represents about ¼ of the total cost, depends on the availability of additional funds, the date of its approval is therefore uncertain. If started early 2000, interferometry with all four Unit telescopes and three Auxiliary telescopes could begin early 2003.

5. CONCLUSIONS

We have described recent developments and the summer 1996 status of the interferometric mode of the ESO Very Large Telescope. ESO now continues with VLTI with a larger effort in terms of manpower than ever before and involves a significant fraction of the ESO astronomical community. The development plan for the VLTI has been adapted to the difficult financial situation by substantial modification of the concept and by implementig capability gradually in two phases. We feel that the modifications simplfy the project in many areas while even strengthening the scientific potential. However, introducing the astrometric capability is a new requirement which will certainly be difficult. When Phases A and B are completed, a large subset of the initial goals for VLTI will have been put into existence.

At this time, the VLTI will be far from complete, and one should prepare for further upgrades. An impotant capability will be the near infrared capability of Unit telescopes through adaptive optics. Those can be systems which are optimised for interferometric use and therefore may be simpler than stadalone adaptive optics systems. Another important capability would be extending the spectral regime towards the visible, opening a wide range of spectral diagnostics and even higher resolution. Similarly important would be adding a fourth Auxiliary telescope and more delay lines to bring the number of beamlines up to a number of eight. VLTI will then unveil its full potential as an optical aperture synthesis array.

6. REFERENCES

1. Tarenghi, M., "The Very Large Telescope Observatory", this volume.

2. von der Lühe, O., D. Ferrand, B. Koehler, Zhu N., Th. Reinheimer, "The Interferometric Mode of the ESO Very Large Telescope", in Proc. SPIE Proc. Vol. 2200 *Amplitude and Intensity Spatial Interferometry II,* J. Breckinridge (Ed.), pp. 168-179, 1994.

3. von der Lühe, O., F. Derie, D. Ferrand, B. Koehler, S. Lévêque, F. Paresce, L. d'Arcio, "Interferometry with the ESO Very Large Telescope", in Proc. SPIE Proc. Vol. 2566 *Advanced Imagin Technology and Commercial Applications,* N. Clark, J. Gonglewski (Eds.), pp. 124-133, 1995.

4. Paresce, F. and the Interferometry Science Advisory Committee, "A New Start for the VLTI", ESO Messenger 83, pp. 14-21, March 1996.

5. Shao, M., M. M. Colavita, "Potential od long-baseline infrared interferometry for narrow-angle astrometry," Astron. Astrophys. 262, pp. 353-358, 1992.

6. Léger, A., Mariotti, J.-M., Rouan, D., Schneider, "How to search for extra-solar planets with the VLT/VISA?" in *.Science with the VLT,* Proceedings of the ESO Workshop 28 June - 4 July 1994, J. R. Walsh and I. J. Danziger (eds.), Springer 1995, pp. 21-32, 1995.

7. Quirrenbach, A., " Astrometric detection ond investigation of planetary systems with the VLT Interferometer," in *Science with the VLT,* Proceedings of the ESO Workshop 28 June - 4 July 1994, J. R. Walsh and I. J. Danziger (eds.), Springer 1995, pp. 33-37, 1995.

8. von der Lühe, O., A. Quirrenbach, and B. Koehler, "Narrow-angle Astrometry with the VLT Interferometer," in *Science with the VLT,* Proceedings of the ESO Workshop 28 June - 4 July 1994, J. R. Walsh and I. J. Danziger (eds.), Springer 1995, pp. 445-450, 1995.

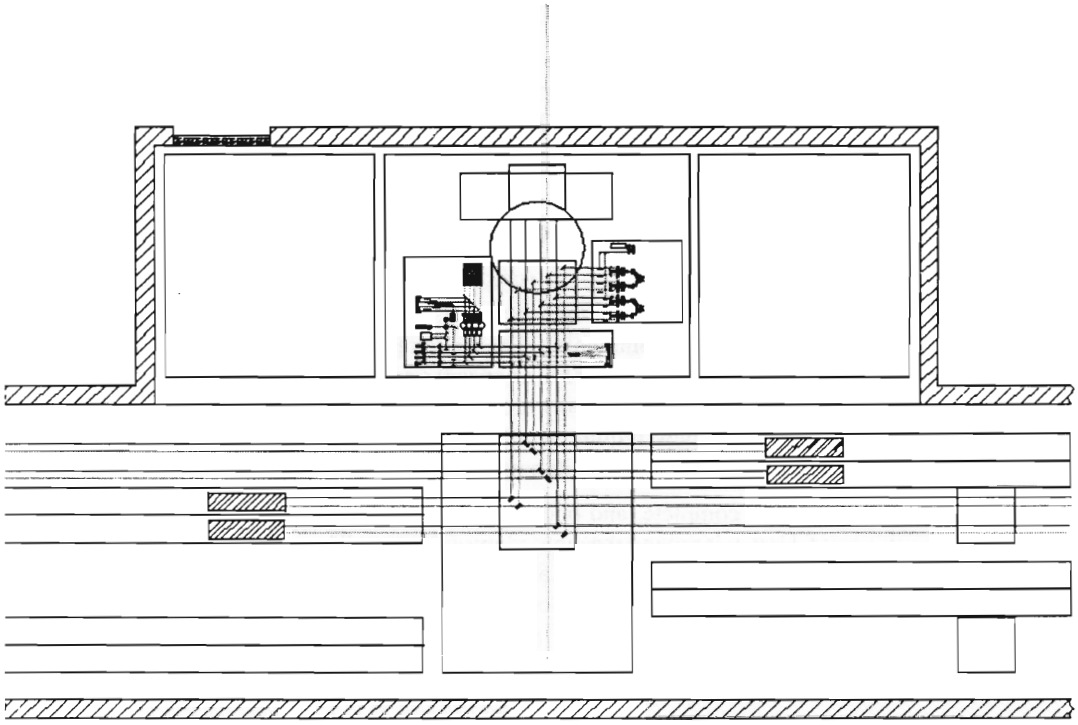

Figure 3: Preliminary configuration of interferometric laboratory.