ADONIS ESO-TP-57

A USER-FRIENDLY ADAPTIVE OPTICS SYSTEM FOR THE ESO 3.6 m TELESCOPE

N. Hubin(1), J.L. Beuzit(2), E. Gendron(1), L. Demailly(2)

(1) ESO, Karl-Schwarzschild-Str. 2, 85748 Garching, FRG

(2) DESPA (URA 264/CNRS), Observatoire de Paris, 5 place Jules Janssen, 92195 Meudon, France

Abstract

ADONIS (Adaptive Optics Near Infrared System) is an upgrade of the Come-On-Plus adaptive optics system which is designed to allow the astronomical community to use adaptive optics as a common user instrument. This paper describes the main features of the new system, which include a new computer system, improved mechanical stability, an accessible user interface, and a new infrared imaging camera covering the 1-5 micron region. The need for an atmospheric dispersion corrector in Adonis is also discussed. The new computer system implements an open Artificial Intelligence architecture with interfaces to all the various sub-systems as well to the telescope control system, and seeing and meteorological sensors. The control of the instrument is complex and several of the operational parameters have to be optimized in relation to the prevailing atmospheric conditions and observational requirements. The computer system will enable to control the instrument in an efficient way and minimize the loss of telescope time.

1. Introduction

The first astronomical results obtained at the ESO 3.6 m telescope with the Come-On adaptive optics system demonstrated the impressive potential of this technique [1,2,3]. A second generation of this system [4], called Come-On-Plus, has since been developed and tested at La Silla observatory [5]. It is now the only system of this kind offered as a standard instrument to the European astronomical community. Nevertheless, adaptive optics remains a high technology technique that uses complex technology. Although the Come-On and Come-On-Plus systems have operated very smoothly during numerous observing runs since 1990, a fairly large team of qualified personnel is required to operate the whole system. Several instrumental parameters have to be optimized according to astronomical requirements and prevailing atmospheric conditions. These include the magnitude and color of the reference star, the wavelength of the observed object and its angular separation from the reference, and the atmospheric turbulence profile. With the present adaptive optics systems this optimization cannot be carried out very easily and has given rise to somewhat inefficient use of telescope time. The experience gained with the present systems has led to the concept of the new instrument, called ADONIS (ADaptive Optics Near Infrared System), which is intended to improve the performance, versatility and the operational efficiency of the Come-On-Plus system. It will allow the instrument to be used by astronomers who have little experience with adaptive optics systems. A further general objective is to develop operational procedures and to test certain technical concepts that can be later applied to the adaptive optics system for the ESO Very Large Telescope. ADONIS is presently under development and is due to be fully implemented in mid-1995. Like its predecessor, the new system will be installed at the F/8 Cassegrain focus of the ESO 3.6 m telescope. The principal design changes relate to the Real-Time Computer (RTC) and the Master Computer, which now incorporates an Artificial Intelligence system to handle overall instrument control and the interface with the user. In addition, a dedicated high resolution infrared imaging camera will be added to take full advantage of the adaptive optics system.

To be published in the Proc. ICO-16 Satellite Conf. on "Active and Adaptive Optics", Garching, Aug. 2-5, 1993

2. Optical layout

The optical system of ADONIS, which is indicated in Figure 1, has not been changed substantially from that of Come-On-Plus [4]. Remote tilt control of mirror M6, the first mirror after the adaptive closed loop, allows the sky infrared background to be recorded between exposures without offsetting the telescope. M7 to M9 have been added to bring the F/45 instrument focus to a more accessible position to allow different imaging detectors or visitors' instruments to be accommodated in a straightforward way. In addition, a third wavefront sensor channel will be eventually implemented to offer the possibility of wavefront sensing in the infrared when the visible image of the reference star is too faint.

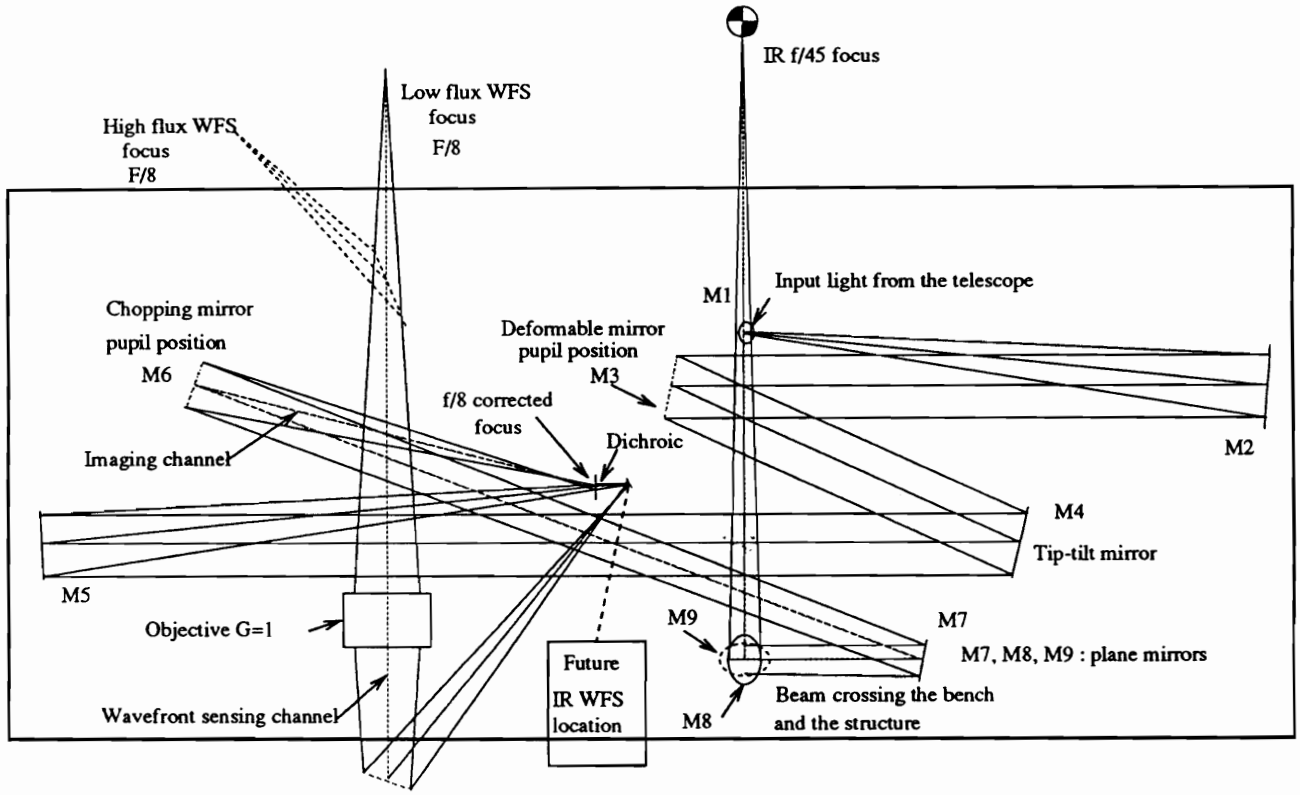

Figure 1: Overview of the optical layout of ADONIS

3. Flexure and Guiding errors

ADONIS, like Come-On-Plus, will be able to provide a Strehl Ratio (SR) up to 70% in the K-band and 50% in the H-band under good seeing conditions. To take advantage of this image quality, the mechanical stability of the adaptive optics system as well as the infrared camera it feeds has to be one to two orders of magnitude better than for conventional imaging for any given integration time. If a loss in the Strehl Ratio of 5% in the H-band is allowed, the corresponding residual image movement, either due to mechanical instability or guiding error, is equivalent to 15 mas rms image movement on the sky. An evaluation of the flexure in the image channel (M6 to M9 and camera support) over 10 minute integration time has shown that an improvement of an order of magnitude has to be achieved compared to Come-On-Plus to meet this requirement. The second source of error is due to the effect of the differential atmospheric dispersion between the wavefront sensor wavelength, which is usually in the visible range, and the observed wavelength which is usually in the infrared. This effect is well known [6] and is usually compensated by introducing the appropriate correction factor in the pointing

model of the telescope control system. In the present case, two additional secondary effects are significant and must also be considered: the effect of the spectral type of the reference star which is normally unknown and the effect of the finite bandpass of the wavefront sensor (presently 450 - 850 nm). These factors act together to produce an overall error in the effective operating wavelength of the wavefront sensor and hence an error in the differential refraction correction factor applied. Figure 2 shows the error due to the differential atmospheric dispersion between the WFS and the instrument working at 2.2 μm as a function of zenith angle for reference stars of different spectral types if the reference star is assumed to be type G0, *i.e.*, after the correction for differential atmospheric refraction for a star of spectral type G0 has been applied. Figure 3 indicates the centroiding error due to the bandpass of the WFS for exposure times of 10 and 20 mn for different reference star spectral types.

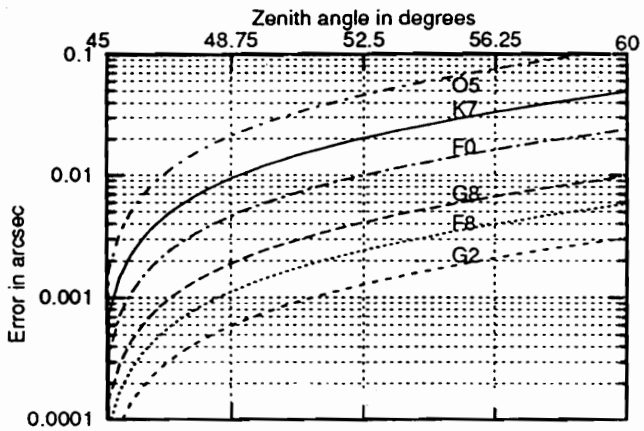

Fig. 2: Guiding error due to differential atmospheric dispersion

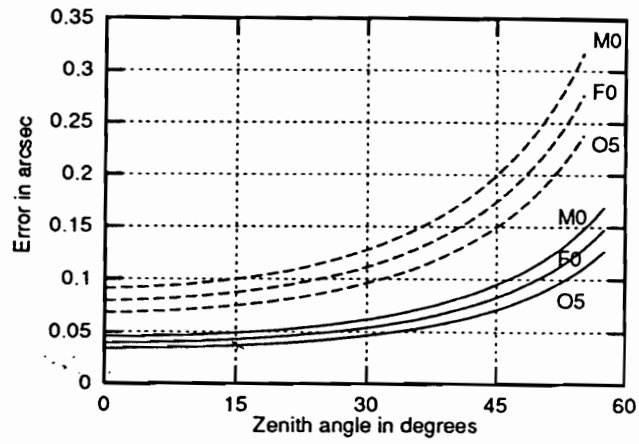

Fig. 3: Guiding error due to atm. disper. effect within the bandpass of the WFS

The elongation of the image at the focus of each sub-aperture of the Shack Hartmann array has several additional negative effects. First, it reduces the signal to noise ratio and consequently the limiting magnitude of the system. Second, it significantly reduces the available F.O.V. and the measurement dynamic range. This requires the use of a larger detector which, in turn, reduces the temporal bandwidth. For these reasons it is intended to include an atmospheric dispersion compensator before the WFS to remove the spectral elongation due to atmospheric dispersion, and to correct the differential effect by providing the real time computer with data on the spectral type of reference star used. This will be only possible if the spectral type of the reference star is provided by the astronomer.

4. Remote Control Functions

In order to optimize the set-up and operation of the instrument, it is necessary to be able to control many of the instrument optical functions remotely from the Master Computer, and for this to have access to observational and atmospheric parameters. Typical remote control functions include the selection of the wavefront sensor (WFS) frame frequency according to the reference star magnitude, selection of the WFS itself (high flux, low flux or, eventually, infrared), setting of the chopping mirror offset and selection of a neutral density filter to adjust the flux on the WFS.

5. Real Time Computer

The Real-Time Computer (RTC) performs the overall monitoring and control of the adaptive optics system by generating the deformable mirror actuator commands from the wavefront sensor output signals according to the closed loop algorithm. The new version of the RTC to be built for ADONIS will allow the user to have access in real time to the wavefront slope information (Shack Hartmann centroiding data) as well as to the deformable mirror commands. This will allow the correction to be optimized during observations and provide the slope information for post-detection data reduction. It will be possible to update regularly the control law parameters when the closed-loop is running. This new RTC will be able to carry out the complete processing for 7x7 Shack Hartmann sub apertures of 8x8 pixels in less than 1 ms after the end of the WFS integration.

6. ADONIS Infrared Cameras

Two infrared cameras will be offered to the astronomical community with ADONIS in addition to the possibility of installing a visitor instrument as mentioned earlier. The first camera, which has already been in use with Come-On-Plus, is a one provided by the *Max-Planck-Institut für Extraterrestrische Physik* in Garching [7]. This is a 256x256 Nicmos camera working in J, H and K-bands with a pixel scale of 50 mas/pixel. It also provides a low spectral resolution imaging mode in the 1.3-2.38 m range.

A second camera is currently being developed to cover the 1-5 m range. It is a 128x128 HgCdTe infrared camera with two image scales: 35 mas/pixel for observation in J and H bands, and 100 mas/pixel for observation in L and M bands. A pupil imaging lens allows the pupil of the camera to be properly aligned with respect to the adaptive optics pupil. Two CVFs covering the spectra ranges 1.34-2.52 m and 2.50-4.52 m will provide low spectral resolution imaging up to R ≈ 70-80. A number of narrow band filters may be used like HeI, Brγ, H_2O, PAH, H_{3+} and Brα. An overview of the camera is shown in figure 4.

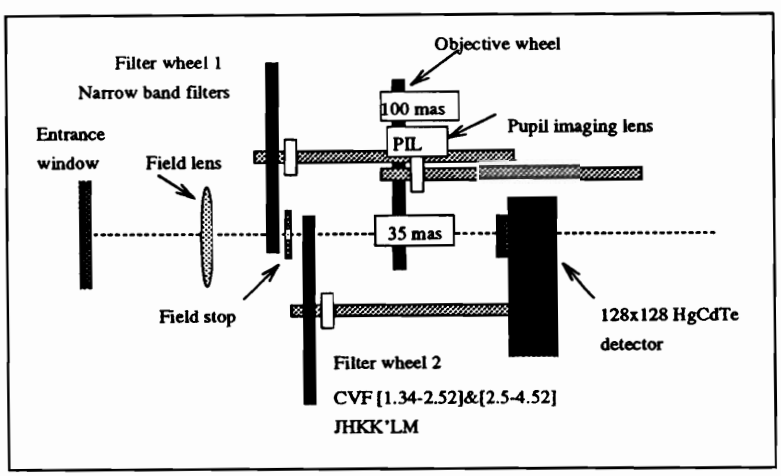

Figure 4: Schematic diagram of the new infrared camera for ADONIS

The first evaluation of the detector characteristics indicates the following parameters:

- Full well capacity: $5\ 10^6\ e^-$
- Quantum efficiency: 50%
- Dark current (at 50 K): 5000 e^-/s/pixel
- Readout noise (at 330 kHz): 400 e^-

7. Artificial Intelligence System

The ADONIS Artificial Intelligence System will be designed as an adaptive synergy of interacting modules interfaced on one side with each component of the adaptive optics system. On the other side, an intelligent control panel is operated by the astronomer and will provide an overview of the system set-up and state parameters as well as all relevant data for evaluating the current performance of the instrument. Figure 5 indicates the general architecture and data flow paths for the control of the system in which the Master Computer performs most of the optimization and control tasks. This architecture includes interfaces with the site station to obtain data on atmospheric and observing conditions, the stellar databases, the telescope control system, as well as the ADONIS optical bench, the Real-Time Computer and the infrared camera.

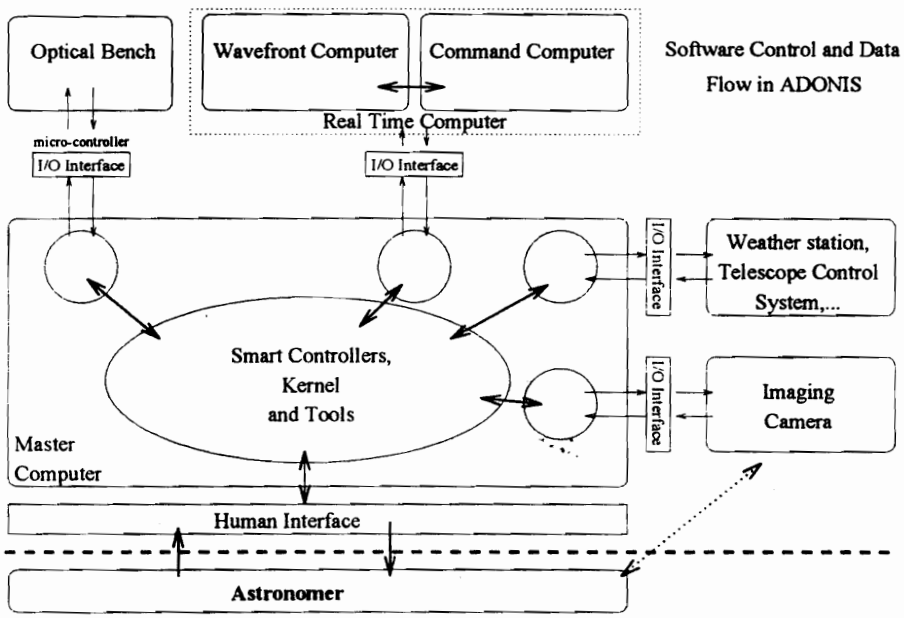

Figure 5: General architecture and principal data flow paths of the ADONIS computer system

Internally, a client and server architecture will be used for interactions between the Input/Output class clients, the internal class clients, and the Message and Data Server as indicated in Figure 6. The I/O clients correspond to the connected subsystems mentioned previously, while the internal clients correspond to the tools and the smart controllers. We will use an Object Oriented Programming (OOP) and a Class organization, that allow the same kind of behavior to be implemented for different kind of clients (as inherited/derivated methods). OOP also helps to obtain a more robust and re-usable code. Tools are pieces of software that are able to do a given specialized calculation. An important example of an advanced tool is the modal control optimization tool that evaluates the best modal control matrix in relation to the prevailing atmospheric turbulence characteristics and the wavefront sensing noise. All commands, requests, status, and parameters, will be exchanged through messages distributed by the Message Server. This will enable to record, analyze, and improve the decision process, and moreover it makes the system event driven. The control and decision process will be distributed among various small experts, the smart controllers, some higher level controllers will take the Meta-decisions, all off this form the so called Artificial Intelligence System (AIS). The AIS will continuously analyze the data held in the Message Server and will make any required response by triggering the appropriate tool by message sending. The Data Server will identify, record and retrieve

all the data sent under the AIS's request by the different clients, including the wavefront slopes and command information from the RTC, the seeing parameters from the site station, image quality evolution from the MTF estimation tool. The astronomical data, including data needed for advanced post-detection data reduction as well as useful data for the future improvement of the system, will be stored on the file system. This open system design and versatility would allow the same structure to be used for the future VLT adaptive optics system with the minimum of modifications.

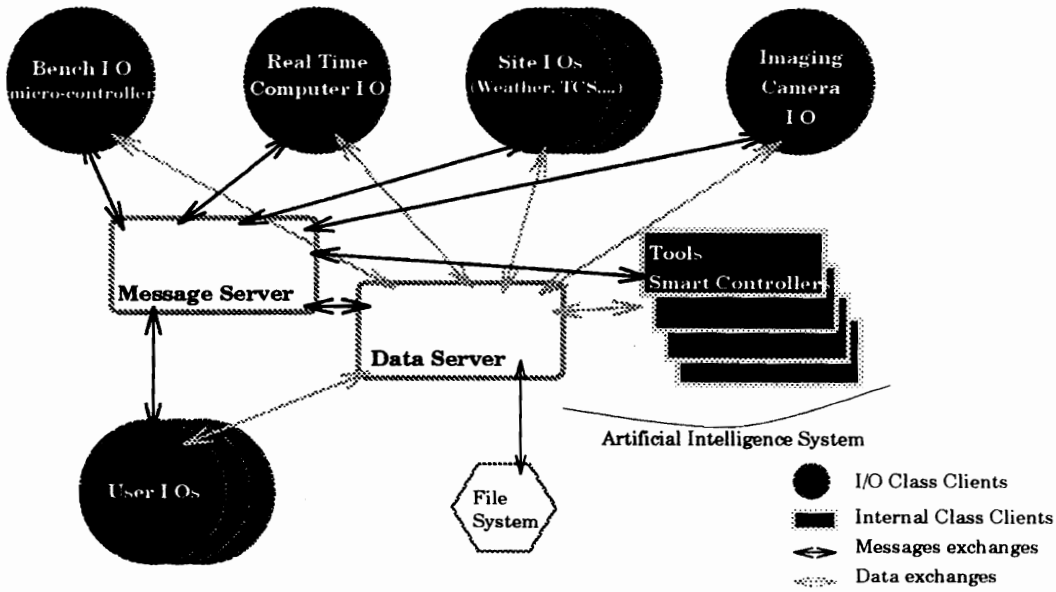

Figure 6: Data flow organization inside the Master Computer

8. Conclusion

The adaptive optics capabilities of the Come-On and Come-On-Plus systems have been demonstrated during the last 3 years at ESO. This later is now being offered to the astronomical community for the first time. ADONIS represents the next major step in this chain of developments, and will have the primary aim of improving the operational efficiency and the reliability of the instrument, and offer a more friendly user interface to the astronomer and hence promote this powerful technique amongst the astronomical community. ADONIS will become available progressively during the period 1993-95 and will replace Come-On-Plus. In addition to the scientific use at La Silla, ADONIS will generate substantial experience in optimizing the operation of adaptive optics systems which will be of direct benefit to the VLT adaptive optics program.

Acknowledgments

The authors thank P. Léna who initiated this project and also all those who have already contributed to it. We thank B. Theodore who has provided the atmospheric dispersion calculation for this article.

References

[1]- Kern P. et al., 'Adaptive optics prototype system for infrared astronomy: I. System description', SPIE 1271-22, (1990)

[2]- Rousset G. et al., 'First diffraction limited astronomical images with adaptive optics', Astron. and Atroph.., 230, L29-L32 (1990)

[3]- Rigaut F. et al., 'Adaptive optics on the 3.6 m telescope: results and performance', A&A, 250, 280-290 (1991)

[4]- Hubin N. et al., 'New adaptive Optics on the 3.6 m telescope: Come-On-Plus', SPIE 1780-87 (1992)

[5]- Rousset G. et al., 'The Come-On-Plus adaptive Optics System: Results and performance', in this conference.

[6]- Filippenko A.V., 'The importance of atmospheric differential refraction in spectrophotometry', PASP, 94, 715, (1982)

[7]- Hoffmann R. et al., 'Sharp and Fast: NIR speckle and spectroscopy at MPE', ESO Conf., Proc. No. 42, 'Progress in telescope and instrumentation technologies', (1992)