Proceedings of the "Eighth International Conference on Wind Engineering (London, Canada).

To appear in *Journal of Wind Engineering and Industrial Aerodynamics.* Ed.: A.G. Davenport, Boundary Layer Wind Tunnel Laboratory, The University of Western Ontario, Faculty of Engineering Science.

# Wind tunnel tests on a large astronomical telescope

C. Alexandrou[a], J.-A. Hertig[a] and L. Zago[b]

[a]LASEN - EPFL, CH-1015 Lausanne, Switzerland

[b]European Southern Observatory, Karl-Schwarzschild-Str. 2
D-8046 Garching bei München, Federal Republic of Germany

## Abstract

The paper describes the methodology of the wind tunnel test program for the evaluation of wind loads on a new 8-metre class astronomical telescope, designed to be operated in open air. The objective of the tests was to determine the static and dynamic wind loads on the telescope structure and the primary mirror. Since these loads affect the normal performance of the telescope, a greater accuracy is needed than it is generally the case with structures dimensioned for ultimate wind loads. The aimed accuracy is achieved by a program combining experimental and computational models, which includes full and model scale tests of the telescope bars, a detailed computer model for the telescope structure including member shadowing and static and dynamic tests for azimuth and altitude forces and moments. Because of resonance problems in the mounting of the model an original method was applied to derive the aerodynamic admittance from the force spectra measurements on the model.

## 1. INTRODUCTION

The European Southern Observatory (ESO) is presently designing a 16-meter equivalent Very Large Telescope (VLT) to be located on a 2600 m high mountain in Northern Chile. The VLT will consist of four large telescopes, each with a primary mirror of 8 meters diameter, positioned along an approximately trapezoidal plan on the levelled mountain top (fig. 1). Several laboratories and a number of smaller mobile telescopes complete the observatory. Each unit telescope is made of two major elements, respectively called the fork and the tube. Both are made of steel truss structure.

Differently from most existing observatories, the VLT unit telescopes are designed for operation in open air, in order to avoid the degradation of optical properties experienced in the conventional hemispherical domes, due to the small temperature differences and consequent free convection phenomena inside a large dome. Therefore a novel type of retractable dome enclosure is being designed.

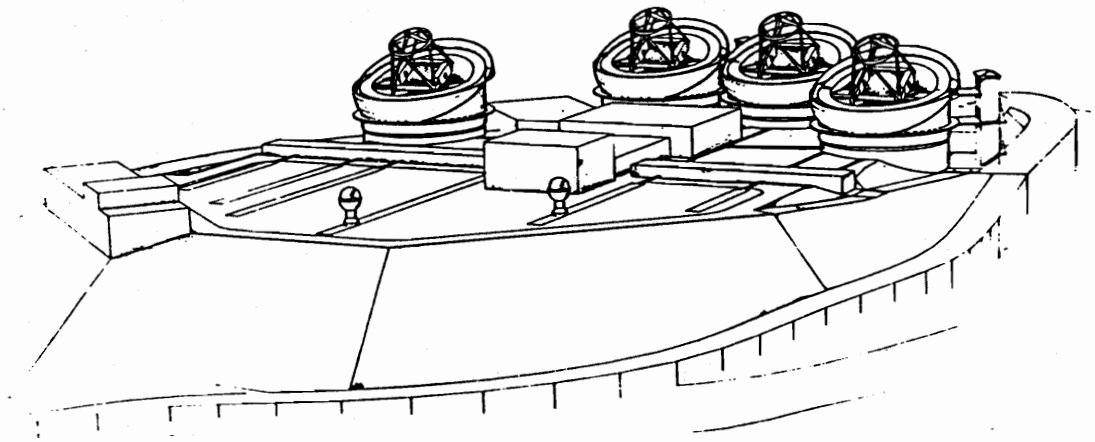

Figure 1: A CAD view of the future ESO Very Large Telescope observatory

Even if the wind flow has favourable effects for the "seeing" (optical) properties of the telescopes, it may, however, cause important loads on the telescope structures and drives and the dynamic effect of wind turbulence may significantly affect the tracking accuracy of the instrument. Also, wind loading on the primary mirror may deflect it enough to affect its shape and hence its optical properties.

One will note that the objectives of this test programme are somewhat different from those normally encountered with large structures such as buildings or sea platforms, for which the main concern is the measurement of ultimate loads to ensure survival conditions, on which safety margins are to be taken.

In our case, the telescope is designed to operate up to a mean wind speed of 18 m/s, with about 27 m/s maximum allowable gust. At higher wind speeds, observations will cease and the dome will be closed . The objective of the test programme is to measure the wind forces and moments (static and dynamic) on the telescope structure, which will affect the *normal operational performance* of the telescope. Hence the greater accuracy required for the measurements, in order to be able first to design an optimal tracking control system for automatic corrections of the telescope pointing, then to predict within reasonable precision the performance of the telescope under both average and extreme wind conditions.

Because the telescope structure is made of circular section members, the aerodynamic forces and moments are Reynolds number dependent. Therefore the wind tunnel test measurements on the VLT model had to be complemented and corrected by separate tests of telescope bar elements at both full and model scale. The measurements were then used to calibrate and validate a numerical model of static wind forces on the telescope. In this way, not only the full scale loads on the telescope were evaluated with better accuracy than otherwise achievable, but also further possible design changes of the telescope structure will not need new tests, but just a new run of the numerical model with updated inputs.

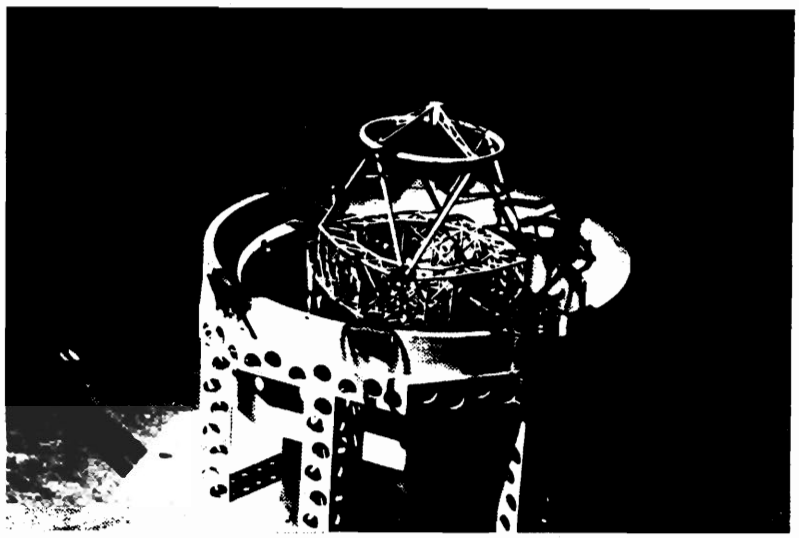

Figure 2: The model of the telescope and its retracted enclosure.

## 2. TEST ITEM

The test model represents the VLT unit telescope on its pillar surrounded by its enclosure (platform), the dome being assumed completely retracted. Two enclosure configurations were tested in the LASEN boundary layer wind tunnel: in the first one the telescope is entirely exposed to the wind, while in the second one (fig. 2) the lower part, including the primary mirror of the telescope is protected in a recess within the telescope enclosure. It is this latest configuration which is presently considered as the baseline design of the enclosure.

## 3. METHODOLOGY

To circumvent the Reynolds similarity problem the evaluation of full scale wind loads on the telescope structure is done through the use of a numerical model (computer program) which is calibrated and validated by the wind tunnel measurements. The procedure involved:

1. The development of a computer program for the calculation of static wind loads on truss-type structures such as the telescope fork and tube.
2. Wind tunnel tests on cylindrical bars of the actual diameter of the telescope elements in order to obtain the relationship $C_D - Re$ for the full scale conditions.
3. Wind tunnel tests on cylindrical bars in test model scale (1:80, see below) with respect to the telescope elements to obtain the relationship $C_D - Re$ for the model conditions.

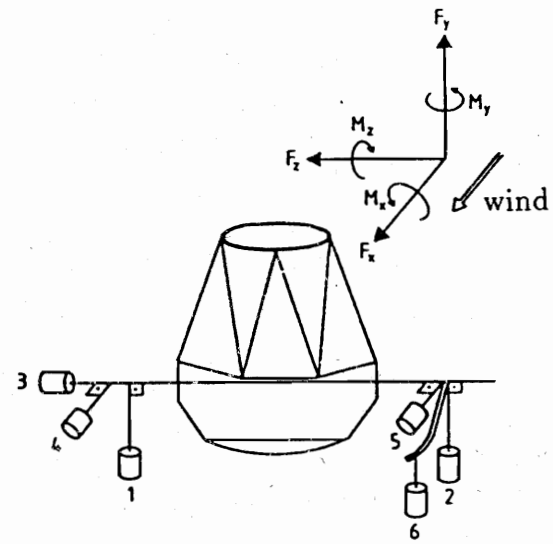


Figure 3: Schematic representation of the load cells arrangement on the altitude axis.

4. Calculation of predicted aerodynamic loads for the wind tunnel scale and conditions, using in particular the results of item 3.
5. Wind tunnel tests in the boundary layer wind tunnel on the model of the unit telescope and its enclosure for the measurements of static forces and moments and, by mean of a spectral analysis, the determination of the aerodynamic attenuation function, which characterises the dynamic interaction of the flow turbulence with the telescope. Then comparison with the numerical predictions and validation of the numerical model. The scale chosen for the model was 1:80. This scale derives from a compromise between the possiblity of simulating the boundary layer outer scale of turbulence in the wind tunnel and the accuracy of gauges in measuring forces on a relatively small model.
6. Calculation of aerodynamic static and dynamic loads for full scale conditions with the validated numerical model and the input from the tests of item 1. above.

The model of the telescope tube is mounted on six load cells arranged as shown in fig. 3. The system is isostatic and statically uncoupled. The alongwind force is dynamically independent and is in fact the one of most interest in the telescope design. A second six-component balance is also fixed at the base of the telescope fork in order to give the total forces and moments at the pillar interface.

## 4. NUMERICAL MODEL

A numerical model was developed which calculates the wind static and dynamic forces on a 3-dimensional truss structure such as the VLT telescope structure.

First the apparent front area of the telescope is calculated for desired azimuth and altitude angles. This is done by projecting the structure to a mesh of 900 × 900 points on

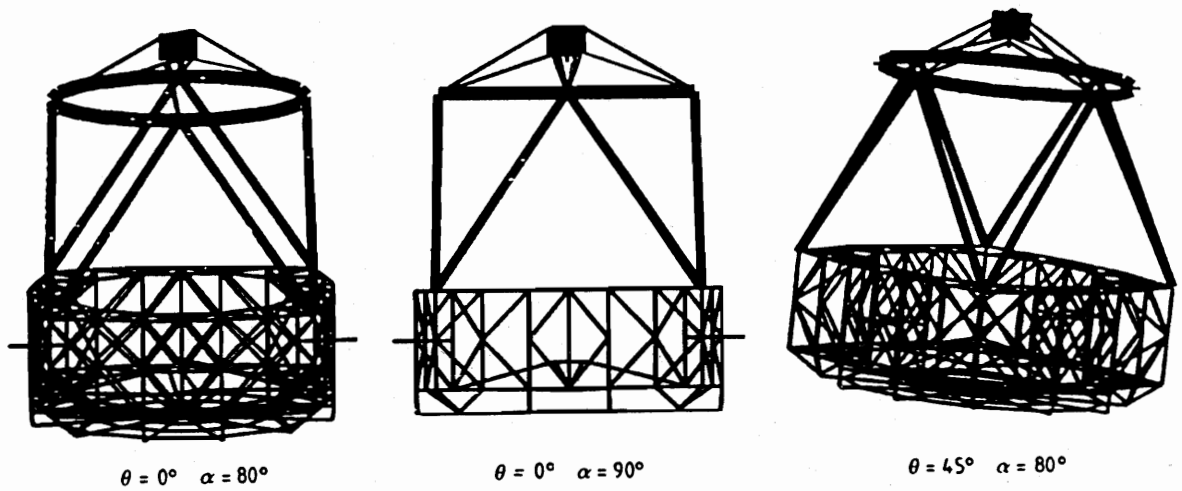


Figure 4: Computer drawings of projected surface for the telescope tube at different orientations.

a plane orthogonal to the horizontal component of wind speed. The drag is calculated for every element of the mesh by multiplication of the element area by the dynamic pressure and the appropriate drag coefficient obtained from the cylinder tests described above. Shading of a member by an upwind one is included by the introduction of a shading coefficient. The total forces and moments are then computed by summation of elemental values.

The drag coefficient of bars (both in model and full scale) and the wind speed profile are derived from preliminary wind tunnel measurements and given as input to the numerical model. The model also computes vertical forces on inclined bars, which significantly affect the moments about the telescope elevation axis.

The numerical model was then calibrated on the wind tunnel tests of the telescope model. The procedure of calibration consisted of the following steps:

1. Initial inputs:
   (a) Drag coefficients as function of Reynolds number for bars in model scale (1:80).
   (b) Wind speed profile measured 8 cm upstream of the telescope model.
   (c) Shading coefficients independent of telescope elevation and equal to 0.8 (value advised by the Swiss Code of Practice [3] for lattice structures).
2. Forces and moments are computed in model scale for a number of telescope elevation angles and the results compared to the ones from the wind tunnel tests.
3. Shading coefficients are determined in order to reproduce the wind tunnel force measurements.
4. Assumptions as to the behaviour of vertical forces as function of the elevation angle are introduced in order to reproduce the wind tunnel moment measurements.

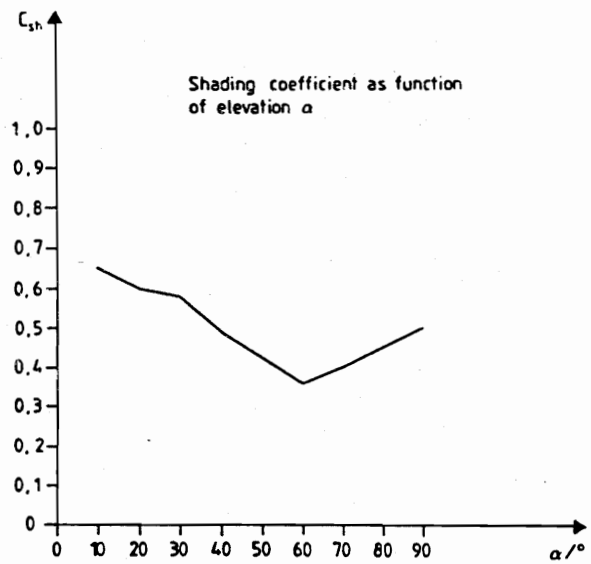


Figure 5: Shading coefficient for the telescope tube as a function of elevation $\alpha$.

Points 3. and 4. are repeated iteratively for all telescope positions, in order to obtain a consistent agreement for both forces and moments. The shading coefficient obtained through this procedure are shown in fig. 5 as a function of the elevation angle of the telescope. Some simplifying assumptions, in particular that the shading coefficient is independent of azimuth angle and that only vertical forces on the topt ring are considered could be proven adequate for a correct modelisation of the telescope forces and moments.

Some force and moment measurements are compared to the results of the calibrated numerical model (in the model scale) in fig. 6 for different azimuth and altitude angles of the telescope. On the average, the numerical results are within 5% of the measured values.

By inputing the drag coefficients as a function of Reynolds number for full scale bars, the calibrated model can now be used for computing full scale forces and moments.

## 5. DYNAMIC TESTS

A major objective of the tests was the evaluation of force and moment spectra in the frequency range beyond the bandwith of the active tracking correction system, estimated to be around 1 Hz (full scale). Here the wind tunnel measurements of force and wind spectra were used to evaluate the aerodynamic admittance function of the telescope. This is strictly a function of wawelength and can be directly applied to full scale. The full scale spectra can be computed with an actual design wind spectrum derived from the site measurements on the mountain top.

In order to eliminate the mechanical admittance of the mounting a particular method was applied to derive the aerodynamic admittance from the spectral measurements on the model. Indeed, the mounting is such that the measured force spectra are not free of

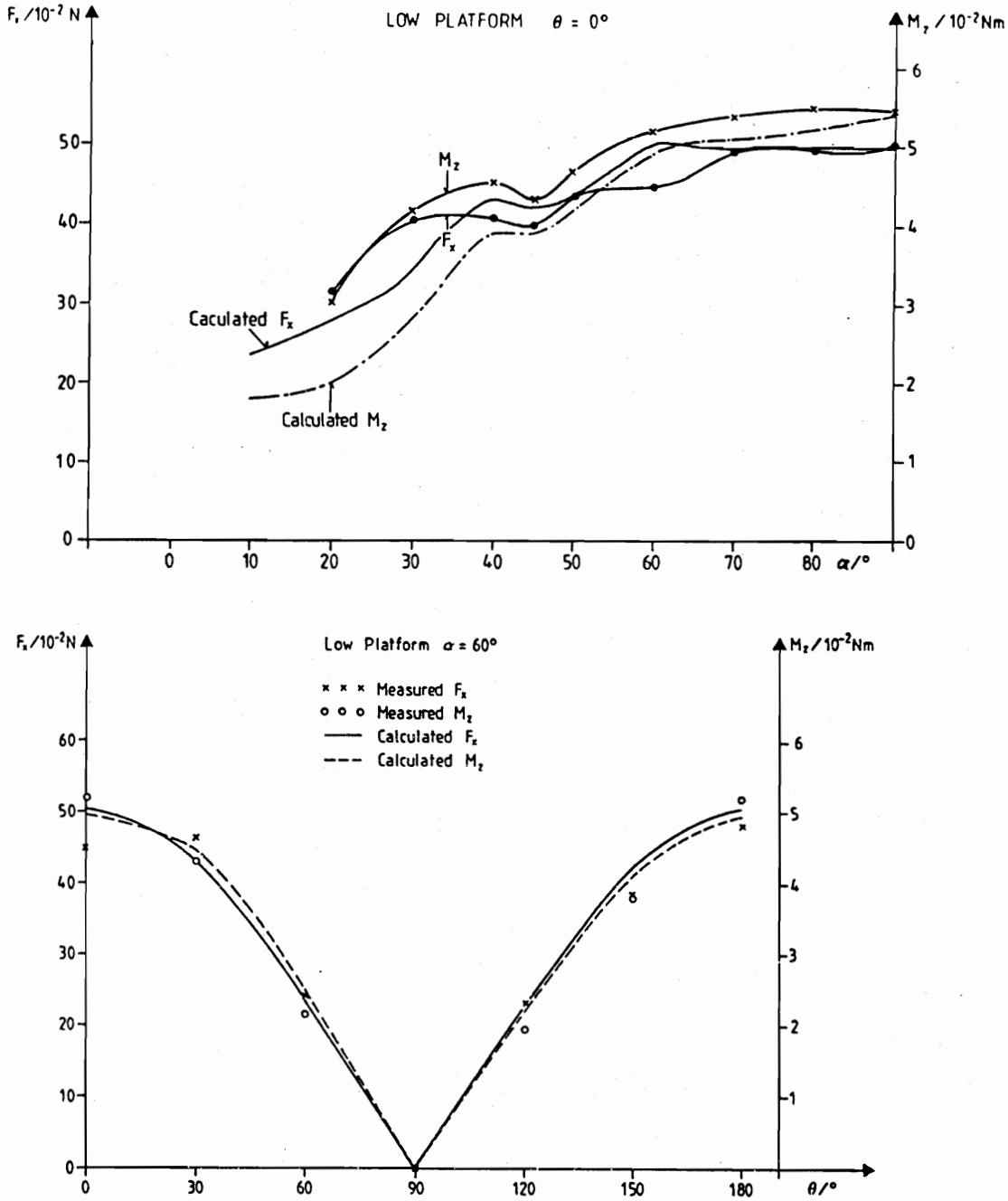


Figure 6:
Comparison between numerically calculated wind loads on the telescope tube:
above: for azimuth $\theta = 0$, as function of elevation;
below: for elevation $\alpha = 60°$, as a function of azimuth.

resonance peaks up to the high frequencies required. The full scale bandwidth of 1 Hz corresponds to 80 Hz in the model scale and the wind energy content may significantly affect the telescope tracking for frequencies up to 6 or 7 Hz (full scale). It is therefore necessary that the mechanical resonant response of the test model is eliminated for frequencies up

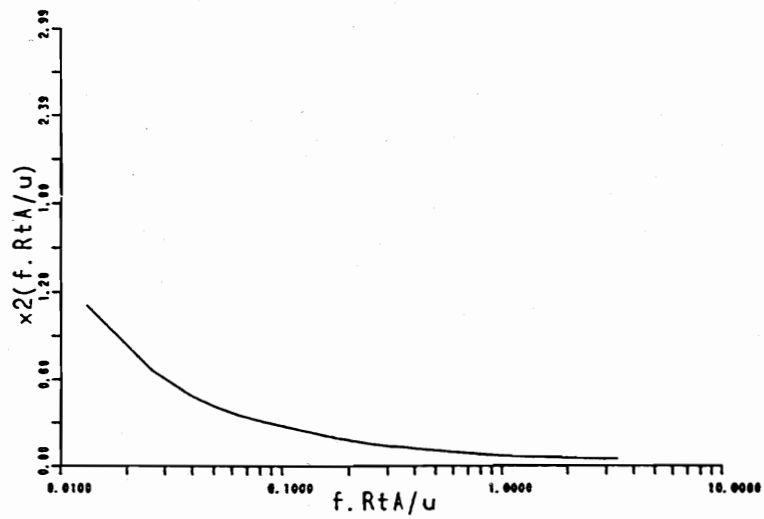


Figure 7: Aerodynamic attenuation of the telescope tube at azimuth 0 and elevation 80° in the recess enclosure.

to 500 Hz, model scale. The correction method devised for these tests is based on the property of the aerodynamic admittance to be strictly a function of wavelength, while the mechanical admittance is a function of frequency.

It is possible to eliminate the mechanical response by performing two sets of measurements at two different wind speeds (hence two different wavelengths for each frequency) and dividing the two force spectra on a frequency by frequency basis. By introducing the reasonable assumption that the mechanical response equals unity at very low frequencies, the aerodynamic admittance can be directly obtained from these two measurements: the aerodynamic admittance for each measured frequency is obtained by interpolating between two consecutive wave numbers corresponding to the same frequency at difference speeds. In order that interpolation is possible, it is necessary that the lower speed is not larger than half the higher speed. The method is presented in some more detail in Appendix B.

The aerodynamic admittance functions were evaluated relative to the measured wind speed spectrum at the height of the elevation axis of the telescope. An example of the functions obtained is shown in fig. 7 which refers to the telescope at azimuth 0° and elevation 80° in the recess enclosure (fig. 2). The curves obtained by this method are automatically smoothed by the interpolation algorithm.

The evaluation of the aerodynamic admittance with this method should not be particularly affected by Reynolds number effects. Indeed the assumption that the aerodynamic admittance is a function of wavelength only means that, for each wavelength, the attenuation depends mainly on the relative scale of the inpinging eddies to the diameter of the cylindrical members. Consequently, if the geometrical scale of the model corresponds to the simulation scale of turbulence, the aerodynamic admittance function is correctly evaluated and needs not to be corrected for Reynolds number effects.

## 6. CONCLUSIONS

The wind tunnel tests described in this paper were carried out in order to obtain design forces and moments for the ESO Very Large Telescope. Mean loads were measured on a 1:80 scale model and used to calibrate a numerical model which was in turn used to compute full scale loads at design wind speeds. This method was developed in order to circumvent Reynold's number similarity difficulties and help designers to cope with future modifications of the telescope design. Aerodynamic admittance functions in the high frequency range were obtained by means of a new method for several telescope configurations in order to evaluate residual dynamic loads beyond the active control cut-off frequency of 1 Hz.

## 7. REFERENCES


[1] J.-A. Hertig, *Similitudes entre écoulements turbulents*, Thèse EPFL no 288, 1977.

[2] L. Zago, *The VLT in the wind tunnel*, in *The Messenger - ESO*, No. 56, June 1989.

[3] *Swiss Code of Practice* SIA 160, 1989.

[4] A. G. Davenport, *The prediction of the response of structures to gusty winds*, International Research Seminar on Safety of Structures under Dynamic Loading, Trondheim, Norway, 1977.


### Appendix A - Wind tunnel tests on cylindrical bars

These tests were performed to provide data on local Reynolds number effects on the VLT telescope structure which is essentially made of jointed cylindrical bars.

Two series of tests have been performed: one with a cylinder of diameter 305 mm, representing the approximate size of the telescope Serrurier struts, and a second series with a tiny 4 mm diameter cylinder, corresponding to the same telescope bars at the model scale.

The $C_D$ versus $Re$ curve for a smooth 305 mm diameter cylinder in two-dimensional flows is shown in Fig. 8. A sharp decrease of $C_D$ for $Re$ around $10^5$ is noted, which would correspond to a flow speed of 17 m/s for the altidude of La Silla. These measurements were performed in the wind tunnel with a laminar flow, as the actual wind turbulence scale of the free atmosphre is much larger than the cylinder diameter.

The $C_D$ vs $Re$ curve of 4 mm diameter cylinders (that is the model scale) was then carried out by measuring the total force on a 140 mm high cylinder placed vertically inside the correctly simulated turbulent flow. The results are plotted in fig. 9.

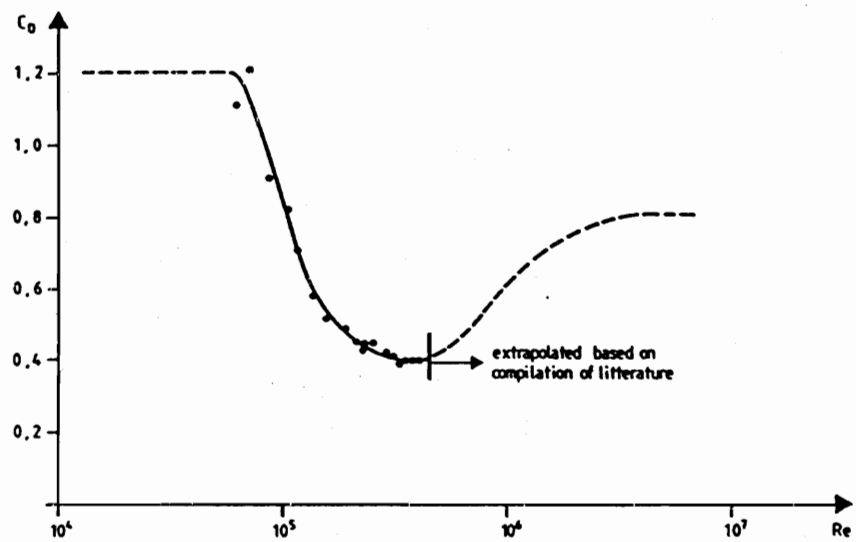


Figure 8: Drag coefficient for a two dimensional 305 mm diameter cylinder - the approximate size of the telescope struts - versus the Reynolds number.

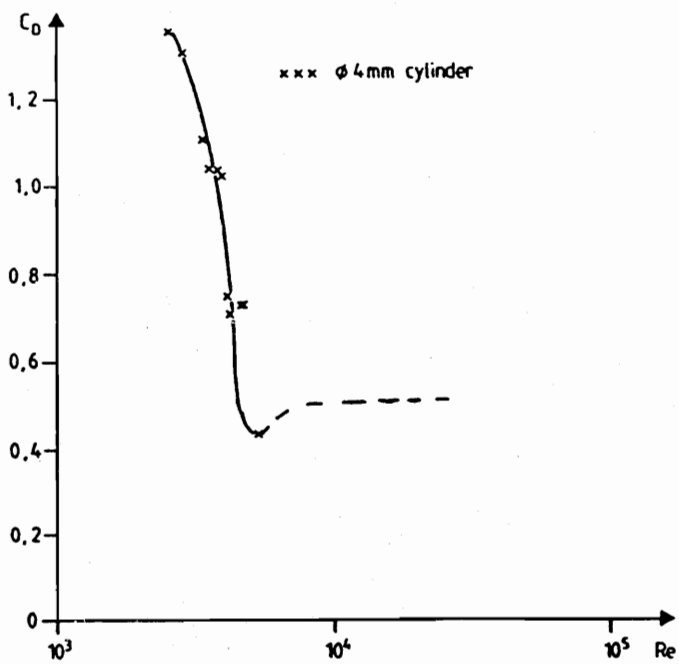


Figure 9: Drag coefficient of a 4 mm diameter cylinder versus Reynolds number measured in the scaled atmospheric boundary layer.

## Appendix B - Evaluation of aerodynamic admittance

The force spectrum is given by the following equation [4]:

$$S_F(f) = 4 \cdot \frac{\overline{F}^2}{\overline{U}^2} S_U(f) \cdot \chi^2 \left( \frac{f\sqrt{A}}{\overline{U}} \right) H^2(f) \tag{1}$$

where:

$\chi^2 \left( \frac{f\sqrt{A}}{\overline{U}} \right)$ is the aerodynamic admittance function.

$S_U(f)$ is the wind speed spectrum.
$\overline{F}$ is the mean along-wind force on the structure.
$\overline{U}$ is the mean speed at reference height.
$H^2(f)$ is the mechanical response.

In the present case, the model of the telescope tube is rigid and mounted on elastic supports (the force cells). In order to derive the aerodynamic admittance from the force spectral measurements, one has to introduce a correction for mechanical response of the test assembly.

This is achieved by making use of the fact that the aerodynamic admittance function is strictly a function of wavelength, while all the other quantities in the equation (1) are frequency dependent. The mechanical response $H^2(f)$ can then be eliminated by direct division of two force spectra measured at two different wind speeds (here $\overline{U}_1$ and $\overline{U}_2$). Substituting in equation (1) for the two different wind speeds and dividing yealds:

$$\frac{\chi^2(\frac{f\sqrt{A}}{\overline{U}_1})}{\chi^2(\frac{f\sqrt{A}}{\overline{U}_2})} = \frac{S_{F_1}(f)}{S_{F_2}(f)} \cdot \frac{S_{U_2}(f)}{S_{U_1}(f)} \cdot \frac{\overline{F}_2^2 \overline{U}_1^2}{\overline{F}_1^2 \overline{U}_2^2} \tag{2}$$

In practice $\overline{U}_1$ is chosen smaller than $\overline{U}_2$ so that:

$$\frac{f\sqrt{A}}{\overline{U}_1} > \frac{f\sqrt{A}}{\overline{U}_2}$$

The aerodynamic admittance at any wavelength can now be estimated from equation (2) if its first value (i.e. at a higher wavelength) is known. To that end we assume that at low frequencies (2 Hz in the VLT case) the mechanical response equals unity. Then a first value of $\chi^2$ can be estimated with equation (1). The assumption of unit mechanical response is quite reasonable if the first mode is at a frequency much higher than the first frequency measured. In the case of the VLT model the first mode is at 64 Hz while the first measured frequency is 2 Hz.