DUMAND-2-93

Optical Module for DUMAND II
-Japanese version-

FERMILAB
JUN 14 1993
LIBRARY

DUMAND Collaboration :

C.M. Alexander[3], W. Anderson[16], T. Aoki[10], U. Berson[13], P. Bosetti[13], J. Bolesta[3], P.E. Boynton[14], H. Bradner[8], U. Braun[13], U. Camerini[15], C. Camps[13], R. Clark[17], S.T. Dye[2], M. Fukawa[11], E. Gergin[2], P.W. Gorham[3], P.K.F. Grieder[1], W. Grogan[11], H.Hanada[9], D. Harris[3], J. Hanptman[16], T. Hayashino[9], E. Hazen[2], M. Ito[10], A. Iwasaki[10], M. Jaworksi[15], M. Jenko[2], H. Kawamoto[9], T. Kitamura[6], K. Kobayakawa[5], S. Kondo[3], P. Koske[4], J.G. Learned[3], C. Ley[13], J.J. Lord[14], R. Lord[14], T. Lozic[2], R. March[15], T. Matsumoto[9], S. Matsuno[3], A. Mavretic[2], L. McCourry[14], M. Mignard[3], K. Miller[12], P. Minkowski[1], R. Mitiguy[3], K. Mitsui[10], S. Narita[9], T. Narita[15], D. Nicklaus[15], K. O'Brien[16], Y. Ohashi[10], A. Okada[10], D. Orlov[2], V.Z. Peterson[3], A. Roberts[3], V.J. Stenger[3], R. Svoboda[17], Takayama[9], S. Tanaka[9], S. Uehara[11], O. Watanabe[10], C.H. Wiebusch[13], G. Wilkins[3], M. Webster[12], R.J. Wilkes[14], G. Wurm[13], A. Yamaguchi[9], I. Yamamoto[7], K.K. Young[14],

1) University of Bern, Switzerland; 2) Boston University, USA; 3) University of Hawaii, USA; 4) University of Kiel, Germany; 5) Kobe University, Japan; 6) Kinki University, Japan; 7) Okayama Science Unversity, Japan; 8) Scripps Institution of Oceanography, USA; 9) Tohoku University, Japan; 10) ICRR, University of Tokyo, Japan; 11) KEK, Tsukuba, Japan; 12) Vanderbilt University, USA; 13) Vijlen Institute for Physics, Netherlands; 14) University of Washington, USA; 15) University of Wisconsin, USA; 16) Iowa State University, USA; 17) Louisiana State University, USA

DUMAND-2-93

Fermilab Library
0 1160 0029955 6

The DUMAND II detector will consist of 9 strings of 24 optical modules each[1,2]. There are two versions of optical modules ; European (EOM) and Japanese (JOM). The JOM is composed by the 15 inch diameter PMT mounted inside of 17 inch glass Benthos-sphere which is pressure tested to 600 atmosphere (Fig. 1). The optical feedthrough is specially designed for DUMAND II. The 15 inch PMT is an original design to fit in a Benthos sphere, and surrounded by mu-metal mesh to shield from the geomagnetic field. The main characteristics of the 15 inch PMT are summarized in Table I. At the DUMAND site where ocean water is constantly around 0°C, the dark noise is suppressed to be less than 10KHz from 20KHz at room temperature, and, on the contrary, the gain is slightly improved.

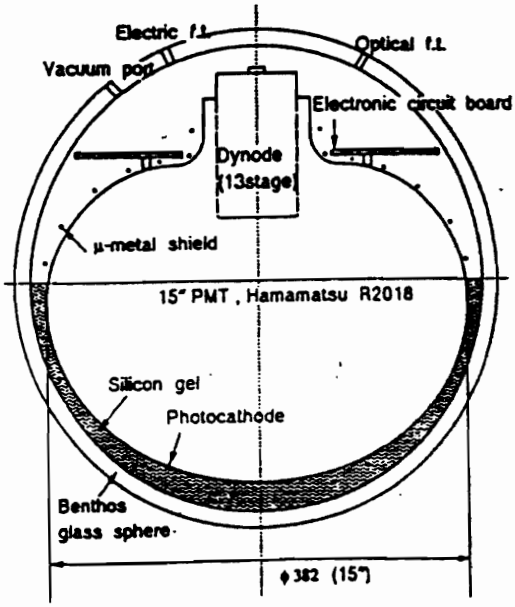

Fig. 1 Schematic view of JOM in cross section

Tube Diameter	15"
High Voltage (Gain)	1900V ($5 \cdot 10^7$)
Quantum Efficiency	22% at 410nm
Transit Time Spread	5ns, FWHM for 1 P. E.
Dark Noise for ≥ 1/4 P. E.	20KHz at room temp.

Table I Typical feature of Hamamatsu R 2018

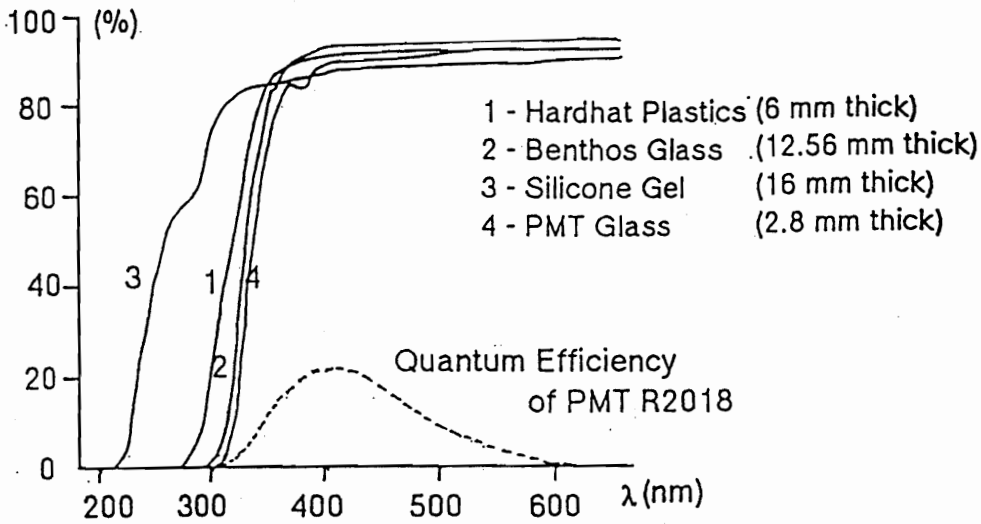

Fig. 2 Spectral transmission in JOM materials and Quantum efficiency of PMT

In Fig. 2, the wavelength dependence of light transmission in JOM materials and quantum efficiency of 15 inch PMT R 2018 are shown.

The JOM electronics installed inside the Benthos sphere has a ring shape and its functional diagram is simply shown in Fig. 3. Fig. 3(a) shows the output pulse structure from the JOM to the String Controller. The output pulse from the PMT is split to two routes and sent to time-digitizers where the arrival times, time-over-threshold (TOT) and, in another branch, the integrated charges (Q) will be measured. The Q signal will follow delayed by 200ns from the rising edge of the TOT signal and is present when the charge exceeds 3 p.e.. The TOT and Q signals will give us a useful information for an analysis of multi-muon events and cascades. Fig. 3(b) shows the JOM control diagram which is employed to set high voltage (HV) and thresholds (V-Th) for TOT and Q signals, and is also to report temperature, HV, V-Th, power supply, water leak, etc. to the String Controller. For these controls, the CPU-chip TMP 68301AF is used with the OS-9 operating system.

In Fig. 4, TOT and Q versus charge ADC output are shown. From 1p.e. to 3p.e., TOT will be used, with the Q signal employed for the range of more than 3p.e..

(a) Output pulse shaping

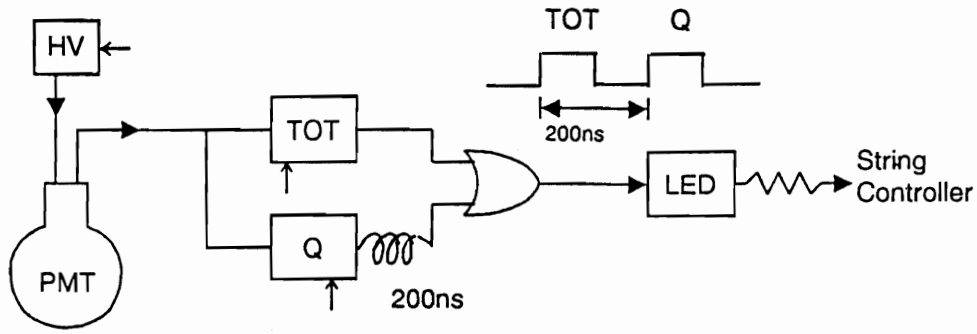

(b) Control diagram

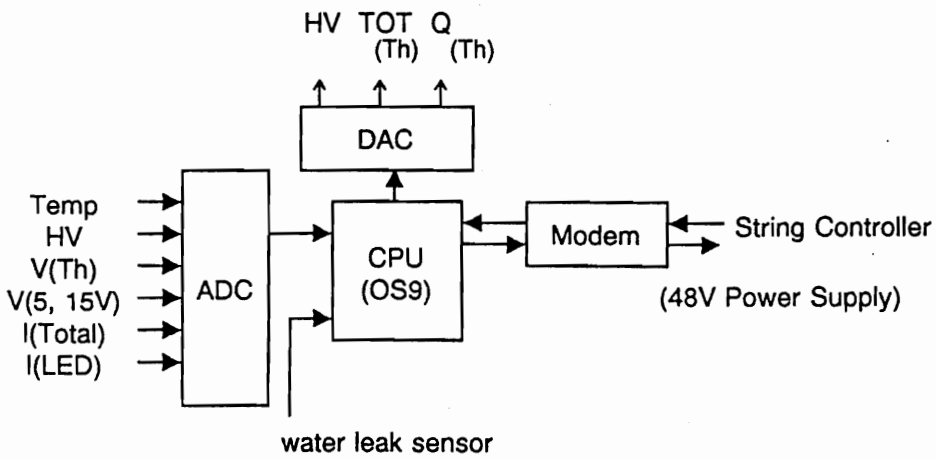

FIG. 3 JOM Electronics

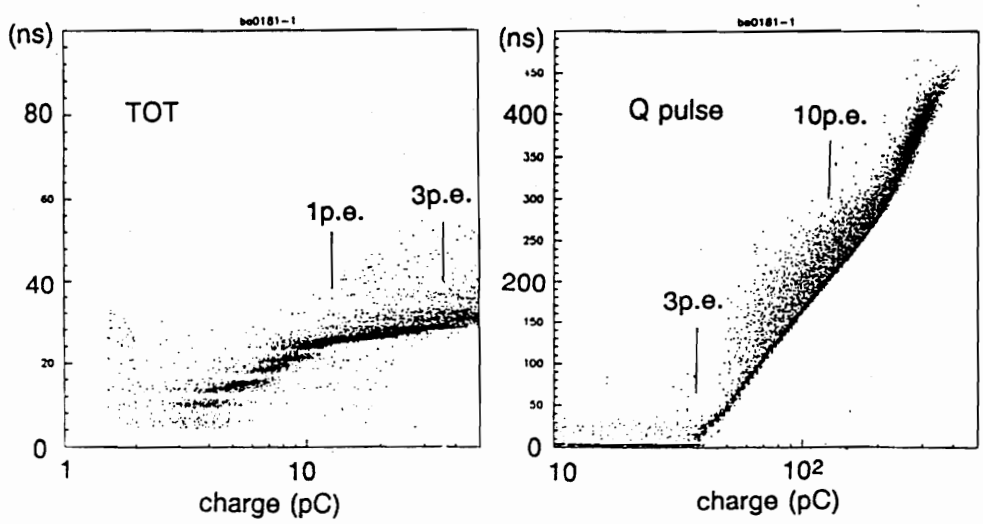

Fig. 4 TOT and Q versus charge

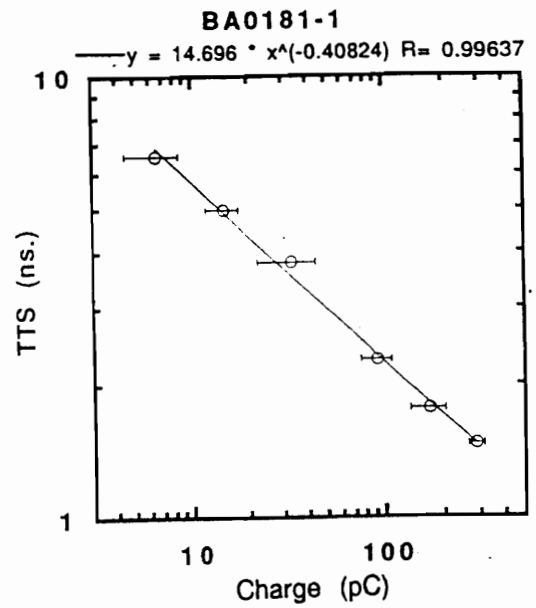

Fig. 5 Transit Time Spread vs light intensity (1p.e. = 12.4pC)

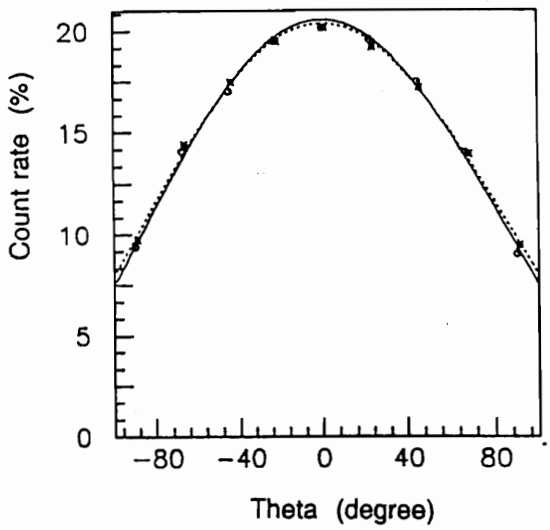

Fig. 6 Zenith angle dependence of counting rate
Solid curve is fitted to Azimuth $\phi = 0$ and 180°, and dashed one $\phi = 90$ and 270°

Fig. 5 shows the Transit Time Spread (TTS) in 15 inch PMT versus incident light intensity after correcting the time walk of Transit Time depending on a pulse height (charge). One p.e. corresponds to 12.4pC and to about 5ns in TTS. When light intensity increases to 10p.e., TTS reaches less than 2ns.

Zenith angle responses of JOM for a wide-parallel illumination are measured as shown in Fig. 6. For two azimuthal angle measurements, responses are almost same and measured points are fitted in a linear function with cosine of the zenith angle, Theta.

The final calibration of JOM has been scheduled and is now in progress in the water-tank at University of Hawaii.

Ref. 1. "DUMAND II", Proposal to construct a Deep-Ocean Laboratory for the study of High Energy Neutrino Astrophysics and Particle Physics, July 27, 1988

2. S. Matsuno et al, "Single Photon Detector for Deep Ocean Application", Nucl. Instr. and Methods A276 359, 1989