DOE-ER-40757-023A

Fermilab Library
0 1160 0035098 7

83

~~DOE 40757 023~~ DOE-ER-40757-023A
~~CPP-93-23~~ A
October 19, 1993

Unstable Systems in Generalized Quantum Theory

E.C.G. Sudarshan, Charles B. Chiu and G. Bhamathi
The Department of Physics and the
Center for Particle Physics
University of Texas
Austin, Texas 78712

Abstract

Phenomenological treatments of unstable states in quantum theory have been known for six decades and have been extended to more complex phenomena. But the twin requirement of causality ruling out a physical state with complex energy and the apparent decay of unstable states necessitates the need to generalize quantum mechanics beyond the standard Dirac formulation. Analytically continued dense sets of states and their duals provide the natural framework for a consistent and conceptually satisfying formulation and solution. Several solvable examples are used to illustrate the general formalism and the differences with the traditional phenomenological treatment (and its modern revivals) pointed out. The unreliability of the singularities of the S-matrix as a criterion for determining the spectrum of states in the generalized thory is also brought out. The time evolution of unstable system is characterized by three domains. Results in the decay of the neutral Kaon and its counter part in higher flavor-generations provides physically relevant and interesting unstable systems.

Contents

1 Introduction **1**
- 1.1 Spectral information of a resonance . . . 2
- 1.2 Lorentz line shape and Breit-Wigner approximation . . . 2
- 1.3 Lorentz transformation on state with complex eigenvalues . . . 4
- 1.4 Violation of the second law of thermodynamics . . . 5
- 1.5 Organization of this article . . . 5
  - 1.5.1 Temporal evolution of an unstable quantum system . . . 5
  - 1.5.2 A theory for unstable quantum systems . . . 6

2 Time evolution of unstable quantum system **9**
- 2.1 Deviation from exponential decay law at small time . . . 10
- 2.2 Resonance Models for Decay Amplitudes . . . 13
- 2.3 Specific Decay Models and A Resolution of Zeno's Paradox . . . 16
  - 2.3.1 The large-t power law and its geometric interpretation . . . 16
  - 2.3.2 Two types of t dependence near $t = 0$ . . . 17
  - 2.3.3 Repeated measurements in short-time and long-time limits . . . 18
  - 2.3.4 Laboratory observations on unstable particle and possible resolution of Zeno's paradox . . . 19

3 Multi-level unstable systems and Kaon system **23**
- 3.1 Introduction . . . 23
- 3.2 Multi-level Systems and Time Evolution Matrix . . . 26
  - 3.2.1 Eigenvalue problem . . . 26
  - 3.2.2 Time evolution matrix . . . 28
  - 3.2.3 Completeness relation . . . 29
- 3.3 Applications to neutral Kaon system . . . 30
  - 3.3.1 Formalism . . . 30
  - 3.3.2 The ratio: $\frac{A_{12}(t)}{A_{21}(t)}$ . . . 31
  - 3.3.3 Regeneration effect . . . 33

4 Generalized quantum system: one-level system **35**
- 4.1 Introduction . . . 35
- 4.2 Vector spaces and their analytic continuation . . . 38
  - 4.2.1 Vector spaces $\mathcal{H}$ and $\mathcal{H}'$ in conventional formalism . . . 38
  - 4.2.2 Analytic continuation of vector spaces . . . 40
- 4.3 Complete set of states in continued spaces . . . 41
- 4.4 Friedrichs-Lee model states . . . 43
- 4.5 Yamaguchi potential model states . . . 47
- 4.6 Extended spaces and semigroup of the time evolution . . . 48
- 4.7 Redundant states and discrete states in the continuum . . . 50
- 4.8 Analytic continuation of survival probability and time reversal invariance . . . 52
  - 4.8.1 Analytic continuation of survival probability . . . 52
  - 4.8.2 Time reversal invariance . . . 52
- 4.9 Two choices for unstable particle states . . . 53

5 Generalized multi-level quantum system **57**
- 5.1 Solution of present multilevel model . . . 58
- 5.2 The inner product $\langle M_\beta^*|M_\alpha\rangle$ . . . 59
  - 5.2.1 Orthonormality relations . . . 60
  - 5.2.2 The "overlap function" . . . 61
- 5.3 Continued wave functions and continued spectrum . . . 62
  - 5.3.1 Complete set of wave-functions . . . 62
  - 5.3.2 Orthonormality relations . . . 63
  - 5.3.3 The completeness relations . . . 63
- 5.4 Derivation of the Bell-Steinberger relation . . . 64
- 5.5 Summary . . . 66

6 The Cascade Model **67**
- 6.1 The model . . . 67
- 6.2 The eigenstates . . . 68
- 6.3 Orthonormality relations . . . 69
- 6.4 Continuation of scattering amplitudes and unitarity relations . . . 69

7 Summary and conclusions **73**

References **75**

Figures **80**

Chapter 1

Introduction

The study of the decay of a metastable quantum system began with Gamow's theory [Ga28] of alpha decay of atomic nuclei and Dirac's theory [D27] of spontaneous emission of radiation by excited atoms. A general treatment of decaying systems was given by Weisskopf and Wigner [WW30], and by Breit and Wigner [BW36], (see for examples: Bohm [Bo80, 86, 89]), Fonda, Ghirardi and collaborators [FGRW73,78, GOWR79]; all these gave a strictly exponential decay. Fermi [Fe50] gave a simple derivation of the rate of transition following the work of Dirac; and this has come to be known as the Golden Rule. The close relationship between resonances and metastable decaying states had been noted in nuclear reactions: Bohr [Boh36], Kapur and Peierls [KP38], Peierls [Pe60]; see also Matthews and Salam [MS58, 59].

Siegert [Sie39] was the first to associate the complex poles in the S-matrix of Wheeler [Wh37] to quantum theory resonances. Peierls [Pe54] seems to have been the first one who seriously took up the problem that the Breit-Wigner resonance model has complex energy states on the "physical sheet" in violation of the notion of causality in quantum mechanics [vK63]; and he emphasized the need to relegate any such complex poles to an unphysical sheet in the analytic continuation of the scattering amplitude in the complex energy plane.

The exact solution of a model of decay going beyond the Breit-Wigner approximation of the Dirac model for metastable atoms was studied by Glaser and Källen [GK56], by Höhler [Hö58] and by Nakanishi [Na58] following the field theoretic formulations of Lee [Le54] and of an earlier work of Friedrichs [Fr48]. Other models of a metastable system were studied for examples, by Moshinsky [Mo 51], by Winter [Win61], by Levy [Le59], by Williams [Wi71] and by Fleming [Fl73].

In the meantime, Khalfin [Kh58,68] had shown that on general principles, if the Hamiltonian were bounded from below, the decay could not be strictly exponential. He used the Paley-Wiener theorem [PW34] to show this result. He also showed that there should be deviations from the exponential in the very large and very small time domains. Misra and Sudarshan [MS77] showed that for a wide class of systems tests of nondecay repeated at arbitrarily small times prevents the decay of a metastable state, the so-called Zeno effect.

The question of irreversibility and the treatment of unstable states has been systematically pursued by Prigogine and his collaborators. Our interest in the conceptual questions has been stimulated by Prigogine's work and his important observation that an unstable particle, if it is autonomous, must obey the same decay law at all times. They must then be distinct from unstable states of Khalfin [Kh58], which must age. Since the work of Prigogine and collaborators is presented elsewhere in this volume we content ourselves with reference to their latest papers [TPP91, PP93, AP93]. See also the point of view elaborated by Prigogine in his work, for example "From Being to Becoming" [Pr80].

In this article we are concerned with a systematic and conceptually consistent development of the theory of metastable systems going beyond the Breit-Wigner model and its modern revivals. We shall follow several of our papers [MS77, CSM77, SCG78, Su91, SC92, CSB92, Su93] over the past two decades.

1.1 Spectral information of a resonance

Quantum mechanics is defined in terms of vectors in Hilbert space with self-adjoint linear operators realizing dynamical variables. Self-adjoint operators have a real spectrum. For stationary states, we have point eigenvalues of the spectrum, while scattering states are usually associated with the continuous part of the spectrum. What then about resonances and metastable resonances?

In standard quantum theory these also belong to the continuous spectrum bounded from below. The only signature of a resonance or a metastable state is a "spectral concentration" or a line shape. Since the line shape is affected by the background and by kinematical factors, usually we can extract only the center of the resonance peak and its width (full width at half maximum). It would be desirable to see these items emerge as spectral information: this is what the Breit-Wigner approximation does but at a very high price, the violation of spectral boundedness. But the phenomena in which this situation obtains are many: deexcitation of atomic levels, alpha decay, formation of compound nuclei and resonant scattering. Therefore we need a more general formulation of quantum mechanics which has a richer spectral structure but does not violate physical principles.

1.2 Lorentz line shape and Breit-Wigner approximation

The amplitude for a metastable state to overlap itself after evolution for a fixed time t is called the survival amplitude

$$A(t) = \langle\psi|e^{-iHt}|\psi\rangle. \tag{1.1}$$

Since this is, in general, less in absolute value than 1, it is tempting to write

$$e^{-iHt}|\psi\rangle \longrightarrow e^{-(iE_0+\frac{1}{2}\gamma)t}|\psi\rangle, \tag{1.2}$$

so that there is a complex eigenvalue. If we recognize that for negative time $|A(t)|$ is also less than 1, we may consider

$$e^{-iE_0t-\frac{1}{2}\gamma|t|}\,|\psi\rangle, \tag{1.3}$$

as the evolute of the metastable state. Taking the Fourier transform of the exponential factor, there are contributions from both the negative time and the positive time. We get for $-\infty < \omega < \infty$.

$$f(\omega) = \frac{1}{2\pi}\cdot\frac{-i}{(\omega - E_0) - \frac{i\gamma}{2}} + \frac{1}{2\pi}\cdot\frac{i}{(\omega - E_0) + \frac{i\gamma}{2}} = \frac{1}{\pi}\cdot\frac{\frac{1}{2}\gamma}{(\omega - E_0)^2 + \frac{\gamma^2}{4}}. \tag{1.4}$$

The last expression has the Lorentz line shape known from the response of a harmonically bound electron with a dissipative term. Note that the spectrum is unbounded from below. The spectral weight is an analytic function of ω with isolated poles at $\omega = E_0 + i\gamma/2$ and at $\omega = E_0 - i\gamma/2$. Since $f(\omega)$ is nonzero along the entire real axis, there are two pieces of the piece-wise analytic Fourier transforms. One piece varies as $e^{-\gamma t/2}$ for positive t and zero for negative t, the other piece has $e^{\gamma t/2}$ for negative t and zero for positive t. Neither of these pieces can serve to model an autonomous physical state since the state appears to be created or destroyed at $t = 0$ and has a purely exponential law. There are no states in the physical Hilbert space, that is among states in the linear span of positive energy states which have such a property. (A "state" with such a time dependence can be synthesized only if one includes unphysical negative energy states along with the physical states.) If we require of these unphysical "states" the physical requirement of causality, i.e. they vanish for negative times, then we get the unique (though unphysical) choice

$$f(\omega) = \frac{1}{2\pi}\cdot\frac{i}{(\omega - E_0) + \frac{i\gamma}{2}}, \tag{1.5}$$

$$|\psi(t)\rangle = \theta(t)e^{-iE_0t-\frac{1}{2}\gamma t}|\psi(0)\rangle. \tag{1.6}$$

However, this state is not time reversal invariant; and cannot be made time reversal invariant without giving up the causality requirement. If we give up causality, we get back (1.3) and (1.4)

The deomposition in (1.4) into two terms is the split of an unphysical state with a spectrum $-\infty < \omega < \infty$ into *two* unphysical states which are analytic in the lower and upper half planes and are therefore respectively causal and anticausal. This is a special case of a general decomposition which can be carried out for physical states and for unphysical states into the sum of functions analytic in halfplanes. This is discussed in detail in a later section of the paper (see Sec. 4.6).

Let us return to the Lorentz line shape (1.4). A classical physical context in which such a line shape arises is in the correlation function of a harmonically driven damped harmonic oscillator. Here the time dependent amplitude $x(t)$ and the two-point correlation function are respectively described by:

$$\frac{d^2x}{dt^2} + R\frac{dx}{dt} + \omega_0^2 x = ae^{-i\omega t}, \quad x(t) = \frac{a\,e^{-i\omega t}}{\omega_0^2 - \omega^2 - i\omega R}. \tag{1.7}$$

$$\langle\tilde{x}(0)x(t)\rangle \equiv \frac{1}{2\pi}\int_{-\infty}^{\infty}\frac{a^*}{\omega_o^2 - \omega^2 + i\omega R}\cdot\frac{ae^{-i\omega t}}{\omega_0^2 - \omega^2 - i\omega R}d\omega \approx \frac{|a|^2}{4R\omega_0^2}e^{-\frac{1}{2}R|t|}cos\omega_0 t. \tag{1.8}$$

In the last step, the approximation $R << \omega_0$ is assumed. Here the temporal behavior for the two-point correlation function, which is analogous of the survival amplitude, is exponentially damped for both positive and negative time. The frequency dependence has been used in models of dispersion relations for the refractive index of a dielectric in the Sellmeier formula [JW57] and in more detailed theories of the refractive index [Me58]

1.3 Lorentz transformation on state with complex eigenvalues

Although Lorentz transformation will not be of the main concerned of the present article, it is instructive to digress here to see how would a resonance state with a complex eigenvalue transform under Lorentz transformation. For definiteness, consider the real spectrum of (1.5) with the corresponding time dependence given in (1.6). The real spectrum here consists of all energies, so when we make a fixed Lorentz transformation we get all possible momenta, some positive some negative with a concentration around the value which is the value expected if we had the energy m. This range of momenta may be expressed by a complex momentum suitably defined. e could work with real momenta but any fixed Lorentz transformation with the boost parameter η which would produce not a unique momentum $msinh\eta$ but all momenta from $-\infty$ to $+\infty$.

To do this analysis for the correct real spectrum $0 \leq \omega < \infty$ is not difficult; there is no state with complex energy $m - i\frac{\Gamma}{2}$ by itself but it must be accompanied by a complex background. Such a state will transform itself into complex momenta but that is mostly the alternative expansion for a superposition of all momenta (in the same direction!). So there is no inconsistency.

In the narrow width approximation $\Gamma \ll m$ we can get a simple derivation of the behavior of the lifetime.

$$\left(m - \frac{i}{2}\Gamma, 0\right)^2 = \rightarrow \left(E - \frac{i}{2}\Gamma', p\right)^2 - p^2, \tag{1.9}$$

with

$$\left(m - \frac{i}{2}\Gamma, 0\right) \rightarrow \left(E - \frac{i}{2}\Gamma', \vec{p}\right), \tag{1.10}$$

Equating the imaginary part on the two sides of the equation leads to

$$E\Gamma' = m\Gamma. \tag{1.11}$$

So

$$\frac{\Gamma'}{\Gamma} = \frac{m}{E} = \sqrt{1 - \frac{v^2}{c^2}}. \tag{1.12}$$

Thus while

$$Re\left(m - \frac{i\Gamma}{2}\right) \to \gamma m = E, \quad Im\left(m - \frac{i\Gamma}{2}\right) \to \frac{\Gamma}{\gamma} = \Gamma'. \tag{1.13}$$

Thus the width is reduced and the lifetime is increased!

1.4 Violation of the second law of thermodynamics

The Breit-Wigner model (and its modern revivals) violate the spectral condition to obtain a strict exponential decay; or, more generally, the linear sum of a finite number of exponentials. This violation would, were it actually to occur, also violate the second law of thermodynamics. Since one admits here states with arbitrary large negative energy it follows that we can devise suitable interactions that take away arbitarily large amounts of energy from the system. The first law of thermodynamics can be satisfied and yet the available energy from the system is arbitarily large. Since this must not be possible, the unbounded spectrum by itself should not occur.

In the formalism presented in this article, there is a complex energy discrete state always accompanied by a complex background such that the real energy spectrum is always bounded from below. The restriction we have to impose to obtain this resolution is to have only such states as are derived from analytic continuations of physical states; then an isolated discrete complex energy state must always be accompanied by a complex background with a real threshold.

1.5 Organization of this article

Our discussion below is divided into two main topics: one concerns the characteristic regions in the temporal evolution of unstable quantum system and the other concerns the formulation of a consistent theory for an unstable quantum state.

1.5.1 Temporal evolution of an unstable quantum system

When the energy spectrum of the unstable particle system is semi-bounded, one expects a deviation from pure exponential decay. This deviation occurs [Kh57, 58] both in the small t-region and in the large t-region. In Chapter 2, the three characteristic time regions [MS77, CSM77] in the time evolution of a one-level unstable quantum system are discussed. In the small t-region, the time evolution of the system is sensitive to repeated measurements. For the case where the expectation value of the energy of the system is finite, one expects the Zeno paradox, i.e. frequent measurement of the unstable system leads to nondecay. On the other hand, when the expectation value of the energy is infinite, repeated measurement of the system would lead to a rapid decay of the system. In the large t-region, the survival probability has a power law fall off with the rate of the fall off governed by the threshold behavior of the semi-bounded spectra. There may be intricate interference phenomena [Win61] at the transition from the exponential decay to the power law region.

The solution [CS90] to the multi-level unstable quantum system is presented in Chapter 3. The most common example of this type of system is the neutral Kaon system which is a two-level system. Here the Lee-Oehme-Yang [LOY57] model is the Breit-Wigner approximation for the two-level unstable quantum system. Within this approximation the unstable Kaons the K_L and K_S can be written as superposition of K^0 and $\overline{K}^0$ and the K_L and K_S decay independently. On the other hand, when one takes into account that they are poles on the second sheet, for the survival amplitudes in addition to the pole contributions, there are also cut contributions. The cut contributions are particularly important in the very small t-region and the very large t-region. Regeneration effects [Kh87, 90], i.e. the transitions between K_L and K_S, are expected to be nonnegligible in these regions [CS90]. These and the related issues for the neutral Kaon system are also discussed in Chapter 3.

So far our attention has been mainly on the features in the time development of unstable quantum systems, which show the departure from pure exponential decay of the Breit Wigner approximation. This deviation arises when one takes the continuum spectrum into account. Here resonance is a discrete pole contribution in the survival amplitude or more generally the transition amplitude on the unphysical sheet. This is in contrast with the Breit Wigner approximation, where the resonance pole(s) are on the physical sheet. The "physical sheet" and the "unphysical sheet" designations here have important distinctions. From the requirement of causality, it can be shown that transition amplitudes are analytic on the physical sheet. The presence of complex poles on the physical sheet, therefore, implies the violation of causality. Since we want to work with a causal theory, resonance poles must be identified with the second sheet poles and the deviation from exponential behavior in the time evolution is expected.

From the study of solvable models , one finds that it is likely that the departure from the exponential decay law at presently accessible experimental time scales are numerically insignificant. Nevertheless we find it to be important to insist on having a consistent framework for the description of unstable states, which gives predictions coinciding with the Breit-Wigner approximation in the bulk of the middle region and at the same time allows the extension to the very small and very large time regions. We proceed now to the generalized quantum system where the resonance pole will be identified as a generalized quantum state.

1.5.2 A theory for unstable quantum systems

As we shall explain in detail later, a consistent framework for the unstable state is achieved through the use of a generalized vector space of quantum states. Consider the integral representation defined by the scalar product between an arbitrary vector in the dense subset of analytic vectors in the physical state space $\mathcal{H}$ and its dual vector: the integration is along the real axis. Keeping the scalar product fixed, the analytic vectors may be continued through the deformation of the integration contour. The deformed contour defines the generalized spectrum of the operator in the continued theory, which typically consists of a deformed

contour in the fourth quadrant and the exposed singularities, if any between the real axis and the deformed contour. We identify an unstable pole as a bonafide discrete state in the generalized space with a complex eigenvalue. Here the continuum states are defined along some complex contour γ, which is deformed in such a manner as to expose the unstable particle pole. The inner product and transition amplitudes are defined between states in $\mathcal{G}$ and its dual state in the corresponding dual space $\tilde{\mathcal{G}}$.

In Chapter 4, we discuss this analytic continuation approach. Several models are studied with special attention to the unfolding of the generalized spectrum. We demonstrate how the analytic continuation is done for the Friedrichs-Lee model in the lowest sector and for the Yamaguchi [Ya58] potential model. We demonstrate that the generalized spectrum obtained leads to the correct extended unitarity relation for the scattering amplitude. In this Chapter we demonstrate that the possibility of having mismatches between poles in the S- matrix and the discrete states in the Hamiltonian, which may arise $\mathcal{H}$ obtains also in the generalized $\mathcal{G}$ space. In the same Chapter we will also consider the analytic continuation of the probability function and the operation of time reversal invariance.

In Chapter 5, we study the analytic continuation as applied to the multi-level system [CS93] and its application to the Bell-Steinberger relation [BS65] for the neutral Kaon system.

In Chapter 6 we extend our consideration to 3-body system. In particular, we consider a solvable model which involves 3-body system i.e. the cascade model [CSB92]. In this model, there are particles A, B and C together with two species of quanta, the interactions are given by $A \to B\theta$, $B \to C\phi$. Here the second sheet singularities are the resonance pole A^*, and the branch cut $B^*\theta$. The analytic continuation [SC93] of this model is also discussed. The extended unitarity relation here can be conveniently displayed in terms of the generalized discontinuity relations. Chapter 7 gives a summary and our conclusions.

Chapter 2

Time evolution of unstable quantum system

In this Chapter we study the time evolution of the so-called unstable particle system. By definition an unstable particle is a non-stationary state which undergoes substantial changes in a time scale much larger than the natural time scales associated with the energy of the system. In this case the "natural" evolution in time and the "decay transition" may be viewed as two separate kinds of time development; and it would be profitable to think of the natural evolution as if it were accounted for by an unperturbed Hamiltonian and the decay transition being brought about by an additional perturbation. Conversely, given a Hamiltonian with a point spectrum and a continuous spectrum, we may introduce perturbations which lead to "decay" of the states which belonged to the point spectrum and which were therefore stationary. In this way we can determine the precise time development of the system.

Many studies have been devoted to the questions relating to the deviation from the exponential decay law of particle decay processes. The time reversal invariance requires that the slope of the survival probability at $t = 0$ be continuous, which admits two possibilities, that it may be either 0 or ∞.

When the expectation value of the energy of the system is finite, this slope is zero. This leads to the Zeno's paradox. The theorem on Zeno's paradox due to Misra and Sudarshan[MS77] proves non-decay result generally. Earlier there were works by Degasperes et al [DFG74] and by Rau [Ra63] where they show that the limit of infinitely frequent interactions leads to non-decay. These are special cases of the Zeno's paradox theorem. Some subsequent investigations of Zeno effect are by Chiu, Sudarshan and Misra [CSM77], by Girardi et al [GOWR79]. Peres [Per80], Fleming [Fl82] and Valanju [Va80, VCS80]. The quantum Zeno effect has been verified by Itano, Heinzen, Bollinger and Wineland [IHBW90] using metastable atoms "interrogated" by microwaves.

On the other hand, for a quantum system where the energy expectation value is ∞, the slope of the survival probability at $t = 0$ is ∞. For this case, the repeated measurement of the system leads to a rapid decay of the system [CSM77].

In the large t region, the survival probability has a power law fall off in t with the rate

of the fall off governed by the threshold behavior of the semi-bounded spectra. There was also the work by Winter [Win61], where a simple barrier-penetration problem was studied to elucidate the time development of quasi-stationary states in the small and the intermediate and the large time regions. Some interference phenomena were observed. Our discussions below are mainly based on the paper by Chiu, Sudarshan and Misra [CSM77].

2.1 Deviation from exponential decay law at small time

We start with a brief recapitulation of the quantum-theoretical formalism for describing unstable states. Let $\mathcal{H}$ denote the Hilbert space formed by the unstable (undecayed) states of the system as well as the states of the decay products. The time evolution of this total system is then described by the unitary group $U_t = e^{-iHt}$, where H denotes the self-adjoint Hamiltonian operator of the system. For simplicity, we shall assume that there is exactly one unstable state represented by the vector $|M\rangle$ in $\mathcal{H}$. The state $|M\rangle$, being an unstable state, must be orthogonal to all bound stationary states of the Hamiltonian H. Hence $|M\rangle$ is associated with the continuous spectrum. (In contrast to this simplifying situation in quantum mechanics, the spectrum of the Liouville operator of a classical dynamical system which is weakly mixing or not mixing must have a singular continuous part.) Thus if F_λ denotes the spectral projections of the Hamiltonian

$$H = \int \lambda \, dF_\lambda \equiv \int \lambda |\lambda\rangle \langle\lambda| d\lambda \,, \tag{2.1}$$

then the function $\langle M|F_\lambda|M\rangle$ is absolutely continuous, and its derivative

$$\rho(\lambda) = \frac{d}{d\lambda} \langle M|F_\lambda|M\rangle = \langle M|\lambda\rangle \langle\lambda|M\rangle \tag{2.2}$$

can be interpreted as the energy distribution function of the state $|M\rangle$; i.e., the quantity

$$\int_E^{E+dE} \rho(\lambda) d\lambda \tag{2.3}$$

is the probability that the energy of the state $|M\rangle$ lies in the interval $[E, E + dE]$.

The distribution function $\rho(\lambda)$ has the following general properties:

(i) $\rho(\lambda) \geq 0$;

(ii) $\int \rho(\lambda) d\lambda = 1$ corresponding to the normalization condition $\langle M|M\rangle = 1$;

(iii) $\rho(\lambda) = 0$ for λ outside the spectrum of H. It may be noted that, in defining the energy distribution function $\rho(\lambda)$ as we have done above, we have absorbed the customary density of states factor or the phase space factor $\sigma(\lambda)$ in $\rho(\lambda)$.

The above-mentioned conditions are quite general and hold for any state which is orthogonal to the bound states of H. In order that the state may be identified as an unstable particle state with a characteristic lifetime, its energy distribution function should satisfy

certain additional conditions. We shall discuss these conditions in Sec.2.3. But the discussion of the present section will use only properties (i)-(iii) of the energy distribution function.

The nondecay probability $Q(t)$ (or the probability for survival) at the instant t for the unstable state $|M\rangle$ is given by

$$Q(t) = \left|\langle M|e^{-iHt}|M\rangle\right|^2 . \tag{2.4}$$

Accordingly, the decay probability $P(t)$ at t is $1 - Q(t)$. The nondecay amplitude $a(t) = \langle M|e^{-iHt}|M\rangle$ may be easily seen to be the Fourier transform of the energy distribution function $\rho(\lambda)$,

$$a(t) = \langle M|e^{iHt}|M\rangle = \int e^{-i\lambda t} d\langle M|F_\lambda|M\rangle \tag{2.5}$$

$$= \int e^{-i\lambda t}\rho(\lambda)d\lambda . \tag{2.6}$$

The celebrated Paley-Wiener theorem then shows that if the spectrum of H is bounded below so that $\rho(\lambda) = 0$ for $\lambda < 0$ then $|a(t)|$ and hence $Q(t) = |a(t)|^2$ decreases to 0 as $t \to \infty$ less rapidly than any exponential function $e^{-\Gamma t}$. This is essentially Khalfin's argument proving the necessity of deviation from the exponential decay law at large time.

The following proposition shows that $Q(t)$ must deviate from the exponential decay at sufficiently small time too. Let the spectrum of H be bounded below; assume further that the energy expectation value for the state $|M\rangle$ is finite,

$$\int \lambda\rho(\lambda)d\lambda < \infty . \tag{2.7}$$

Then $Q(t) > e^{-\Gamma t}$ for sufficiently small t. We shall assume, without loss of generality, that the spectrum of H is confined in the positive semi-axis $[0, \infty]$.

To prove the proposition it is sufficient to show that $Q(t)$ is differentiable and

$$\dot{Q}(0) \equiv \frac{d}{dt}Q(t)\Big|_{t=0} > -\Gamma, \quad (\Gamma > 0) . \tag{2.8}$$

We shall in fact show that

$$\dot{Q}(0) = 0 . \tag{2.9}$$

In view of the positivity of the operator H, the energy distribution function $\rho(\lambda) = 0$, for $\lambda < 0$. Thus the condition (2.7) together with semi-boundedness of the spectrum implies that this function $\lambda\rho(\lambda)$ is absolutely integrable,

$$\int |\lambda|\rho(\lambda)d\lambda < \infty . \tag{2.10}$$

The survival amplitude is defined by

$$a(t) = \int e^{-i\lambda t}\rho(\lambda)d\lambda, \quad \text{with } a(0) = 1 . \tag{2.11}$$

The condition of (2.10) implies that $a(t)$ is differentiable for all t, since

$$|\dot{a}(t)| = \left|\int e^{-i\lambda t}\lambda\rho(\lambda)d\lambda\right| \le \int |\lambda|\rho(\lambda)d\lambda < \infty . \tag{2.12}$$

So the derivative here is continuous. Now

$$a^*(t) = a(-t) , \tag{2.13}$$

so that

$$\frac{d}{dt}a^*(t)\Big|_{t=-s} = -\frac{d}{dt}a(t)\Big|_{t=-s} = -\dot{a}(-s) . \tag{2.14}$$

Since $Q(t) = a(t)a^*(t)$,

$$\frac{d}{dt}Q(t)\Big|_{t=s} = a(-s)\dot{a}(s) - a(s)\dot{a}(-s) . \tag{2.15}$$

In particular,

$$\dot{Q}(0) = \dot{a}(0_+) - \dot{a}(0_-) = 0 , \tag{2.16}$$

since $a(0) = 1$ and $\dot{a}(t)$ is continuous so that $\dot{a}(0_+) = \dot{a}(0_-)$. We emphasize that it is the semiboundedness of H, which ensures the continuity of the derivative, which is an essential ingredient in the proof. For otherwise consider the usual Breit-Wigner weight function $\rho(\lambda) = \frac{1}{1+\lambda^2}$, for which

$$a(t) = \frac{1}{\pi}\int_{-\infty}^{\infty}\frac{e^{-i\lambda t}}{1+\lambda^2} = e^{-|t|} . \tag{2.17}$$

The magnitude of the corresponding derivative at $t = 0$ is

$$|\dot{a}(0)| = \frac{1}{\pi}\int_{-\infty}^{\infty}\frac{\lambda d\lambda}{1+\lambda^2} . \tag{2.18}$$

Notice that this integral diverges at both the lower limit and the upper limit. So it is indefinite. This is manifested by the discontinuity at $t = 0$,

$$a(0_+) = -1 \quad \text{and} \quad a(0_-) = 1 .$$

The preceding proposition shows that at sufficiently small time the nondecay probability $Q(t)$ falls off less rapidly than would be expected on the basis of the exponential decay law. Thus if the unstable system is monitored for its existence at sufficiently small intervals of time, it would appear to be longer lived than if it were monitored at intermediate intervals where the decay law is exponential. The quantum Zeno's paradox states that in the limit of continuous monitoring the particle will be found not to decay at all. This conclusion in the present special case of a one-dimensional subspace of undecayed (unstable) states follows in fact as an immediate corollary of the preceding proposition. It can be easily seen that if the

system prepared initially in the unstable state $|M\rangle$ is (selectively) monitored on its survival at the instants $0, t/n, \ldots, (n-1)t/n, t$, then the probability for its survival is given by

$$Q\left(\frac{t}{n}\right)^n .$$

Since $Q(t)$ is continuously differentiable and $\dot{Q}(0) = 0$, it can be easily shown that

$$\lim_{n\to\infty} Q\left(\frac{t}{n}\right)^n = 1 \tag{2.19}$$

independent of t. It is evident that the survival probability under discrete but frequent monitoring will be close to 1 provided that t/n is sufficiently small, so that the departure from the exponential decay law remains significant. It is thus important to estimate the time scale for which the small-time deviation from the exponential decay law is prominent.

2.2 Resonance Models for Decay Amplitudes

To estimate the parameters T_1 and T_2 which separate the intermediate-time domain, where the exponential decay law holds, from small- and large-time domains where deviations are prominent, we need to make a more specific assumption about the energy distribution function $\rho(\lambda)$ of the unstable state $|M\rangle$. In fact, so far we have assumed only very general properties of $\rho(\lambda)$ that are not sufficient to warrant the identification that $|M\rangle$ represents an unstable state which behaves as a more or less autonomous entity with a characteristic lifetime.

To formulate this resonance requirement we shall rewrite the nondecay amplitude as a contour integral. To this end, we consider the resolvent $R(z) \equiv (H - zI)^{-1}$ of the Hamiltonian H. They form a (bounded) operator-valued analytic function of z on the whole of the complex plane except for the cut along the spectrum of H, which we take to be the real half axis $[0, \infty]$. Under mild restrictions on the state $|M\rangle$, for instance under the condition that $|M\rangle$ lies in the domain of H^2, we have the formula

$$e^{-iHt}|M\rangle = \frac{1}{2\pi i}\int_C e^{-izt} R(z)|M\rangle dz , \tag{2.20}$$

where C is the contour shown in Fig. 2.1. The non decay probability then has the representation

$$a(t) = \langle M|e^{-iHt}|M\rangle = \frac{1}{2\pi i}\int_C e^{-izt}\beta(z)dz , \tag{2.21}$$

where

$$\beta(z) = \langle M|R(z)|M\rangle . \tag{2.22}$$

The function $\beta(z)$ is uniquely determined by the energy distribution function $\rho(\lambda)$ of $|M\rangle$ through the formula

$$\beta(z) = \int_0^\infty \frac{\rho(\lambda)}{\lambda - z} d\lambda , \tag{2.23}$$

and in turn determines the distribution function $\rho(\lambda)$ through the formula

$$\rho(\lambda) = \lim_{\epsilon\to 0^+} \frac{1}{2\pi i}\left[\beta(\lambda + i\epsilon) - \beta(\lambda - i\epsilon)\right] . \tag{2.24}$$

The function $\beta(z)$ is analytic in the cut plane and is free of zeros there. We may thus introduce

$$\gamma(z) = \frac{-1}{\beta(z)} , \tag{2.25}$$

which is analytic and free of zeros in the cut plane. The nondecay probability is then given by

$$a(t) = \frac{i}{2\pi}\int_C \frac{e^{-izt}}{\gamma(z)} dz . \tag{2.26}$$

where the contour C is illustrated in Fig. 2.1. The above representation for $a(t)$ is quite general and does not yet incorporate the important resonance condition alluded to earlier. The resonance condition may be formulated as the requirement that the analytic continuation of $\gamma(z)$ in the second sheet possesses a zero at $z = E_0 - \frac{1}{2}i\Gamma$ with $E_0 \gg \Gamma > 0$. Under this condition the above representation for $a(t)$ shows that it will have a dominant contribution $e^{-iEt}e^{-\Gamma t/2}$ from the zero of $\gamma(z)$ in the second sheet and certain correction terms to the exponential decay law arising from a "background" integral. An investigation of the corrections to the exponential decay law then amounts to an investigation of the background integral in (2.26). This approach to studying the deviation from the exponential decay law has been adopted in the past. Here we investigate the detailed properties of the background integral by making a specific choice for $\gamma(z)$.

To facilitate the choice and to relate our results to investigations on the Lee model and the related Friedrichs model, we note that one can write (suitable subtracted) dispersion relations for $\gamma(z)$.

For instance, if $\gamma(z)$ has the asymptotic behavior

$$|\gamma(z) - z| \xrightarrow[|z|\to\infty]{} z^n \tag{2.27}$$

with $n \leq 0$, then

$$\gamma(z) = z - \lambda_0 + \frac{1}{\pi}\int_0^\infty \frac{|f(\lambda)|^2}{\lambda - z} d\lambda . \tag{2.28}$$

with

$$|f(\lambda)|^2 = \frac{1}{2i}\lim_{\epsilon\to 0_+}\left[\gamma(\lambda + i\epsilon) - \gamma(\lambda - i\epsilon)\right] . \tag{2.29}$$

On the other hand, if $\gamma(z)$ satisfies (2.27) with $0 < n < 1$, then $\gamma(z)$ satisfies the once-subtracted dispersion relation. With the subtraction at $z = E_s$,

$$\begin{aligned}\gamma(z) &= z - E_s + \gamma(E_s) \\ &\quad + \frac{z - E_s}{\pi}\int_0^\infty \frac{|f(\lambda)|^2}{(\lambda - z)(\lambda - E_s)} d\lambda .\end{aligned} \tag{2.30}$$

It may be noted that the form (2.28) for $\gamma(z)$ is the one obtained in various model-theoretic descriptions of unstable states. All such descriptions picture the unstable state $|M\rangle$ as a normalized stationary state of an unperturbed Hamiltonian H_0 associated with a point spectrum of H_0 embedded in the continuous spectrum. The decay transition is caused solely by a perturbation H_I, under suitable assumptions about H_I, for instance that the transition amplitude of H_I between the states associated with the continuous spectrum of H_0 may be neglected in the evaluation of $a(t)$. The nondecay amplitude can be shown to be given by (2.26) and (2.28) or (2.30), where

$$|f(\lambda)|^2 = |\langle\lambda|H_I|M\rangle|^2 \,, \tag{2.31}$$

with $|\lambda\rangle$ being the continuum eigenkets of H_0.

Next define

$$k = z^{1/2}e^{i\pi/4} \tag{2.32}$$

and write

$$\gamma(z) = \tilde{\gamma}(k) = e^{i\pi/2}(k-k_+)(k-k_-)\xi(k) \,, \tag{2.33}$$

with resonance poles as stated earlier at

$$z = E_0 - \frac{1}{2}i\Gamma \text{ and } z = e^{2\pi i}E_0 + \frac{1}{2}i\Gamma \,. \tag{2.34}$$

In the k plane they are at

$$k_\pm \simeq \pm k_0 + \delta \,, \tag{2.35}$$

where $k_0 = E_0^{1/2}e^{i\pi/4}$, $\delta = \Delta^{1/2}e^{i\pi/4}$ with $\Delta^{1/2} = \Gamma/4E_0^{1/2}$. (See Fig. 2.2.) Substituting (2.33) into (2.26) and deforming the contour we may write

$$\begin{aligned} a(t) &= \frac{i}{2\pi}\int_C \frac{e^{-k^2t}2kdk}{(k-k_+)(k-k_-)\xi(k)} \\ &= a_+(t) + a_1(t) + a_2(t) \,, \end{aligned} \tag{2.36}$$

with

$$a_+(t) = \frac{1}{\xi(k_+)}\frac{k_+}{k_0}e^{-iE_0t}e^{-\Gamma t/2} \,, \tag{2.37}$$

$$\begin{aligned} a_1(t) &= \frac{i}{2\pi}\int_{-\infty}^{\infty}\frac{e^{-k^2t}2kdk}{(k-k_+)(k-k_-)\xi(k)} \\ &\simeq \frac{i}{2\pi}\int_{-\infty}^{\infty}\frac{e^{-k^2t}kdk}{(k^2-k_0^2)\xi(k)}\left(1+\frac{2\delta k}{k^2-k_0^2}\right) \,, \end{aligned} \tag{2.38}$$

and $a_2(t)$ a contribution which can be dropped owing to a suitable cancellation. These three parts are associated with the deformed contour

$$C \to S = S_+ + S_1 + S_2$$

illustrated in Fig. 2.2. Note that we do not have to include any contribution from k_-.

To proceed further one has to make the specific choices for $\xi(k)$. We may now restate our problem in the following fashion. Given an amplitude of the form (2.36) with a suitable choice for ξ, how does the decay probability behave as a function of time? What are the characteristic times T_1 and T_2 for the system? How sensitive are these conclusions in relation to the specific forms assumed for ξ? In the following section, we take up a study of these questions.

2.3 Specific Decay Models and A Resolution of Zeno's Paradox

In ref. ([CSM77]), two specific choices for ξ are considered. For model I,

$$\xi(z) = 1. \tag{2.39}$$

This leads to a dispersion relation of the form of Eq. (2.30). For model II,

$$\xi(z) = \frac{\sqrt{-z} - B^{1/2}}{\sqrt{-z} - (B^{1/2} + 2\Delta^{1/2})} \,. \tag{2.40}$$

This leads to the dispersion relation of the form of Eq. (2.28). We proceed to look at several aspects of these solutions.

2.3.1 The large-t power law and its geometric interpretation

The large-t behavior of the survival amplitude for both models is given by

$$|a(t)| \sim \text{const} \times \frac{1}{t^{3/2}} \,. \tag{2.41}$$

A slower than exponential decay, as mentioned in Sec. 2.2 is expected from the general argument of Khalfin though it could be like $\exp(-t^{1-\epsilon})$. On the other hand, the specific $t^{-3/2}$ law is not only a particular property of these special models, but a reflection of the kinematics of the decay process. We may see this as follows. We write $|f(E)|^2 \equiv |\tilde{f}(E)|^2\sigma(E)$, where $\sigma(E)$ is the phase space weight factor. Then from (2.26) and (2.29),

$$a(t) = \frac{1}{\pi}\int_0^\infty dE\,\frac{|\tilde{f}(E)|^2}{|\gamma(E+i\epsilon)|^2}\sigma(E)e^{-iEt} \tag{2.42}$$

$$\begin{aligned} &\simeq \frac{1}{\pi}\int_0^{1/t} dE\,\frac{|\tilde{f}(E)|^2}{|\gamma(E+i\epsilon)|^2}\sigma(E)e^{-iEt} \\ &\sim \frac{1}{\pi}\int_0^{1/t} dE\,\sigma(E)e^{iEt} \\ &\simeq \frac{1}{\pi}\int_0^{\infty} dE\,\sigma(E)e^{iEt} \end{aligned} \tag{2.43}$$

for very large times, because of the rapid variation of the phase factor, provided the functions $\tilde{f}(E)$ and $\gamma(E+i\epsilon)$ behave gently near zero. The phase space factor $\sigma(E)$ has a power law behavior in the neighborhood of the origin. For a nonrelativistic system $E = k^2/2m$,

$$\sigma(E) = 4\pi k^2 \frac{dk}{dE} \sim \sqrt{E}\,, \tag{2.44}$$

while for a relativistic system $E = (k^2+m^2)^{1/2} - m$, as $E \to 0$,

$$\sigma(E) = 4\pi k(E+m) \sim \sqrt{E}\,. \tag{2.45}$$

Hence, in both cases we may recognize (2.43) to behave like

$$\int_0^\infty dE\sqrt{E}\,e^{-iEt} = t^{-3/2}\int_0^\infty du\sqrt{u}\,e^{-iu}\,. \tag{2.46}$$

Thus the inverse-cube dependence of the probability of nondecay $Q(t)$ may be related to the structure of the phase space factor, provided the form factor $\tilde{f}(E)$ is gently varying.

This power law dependence has a simple geometrical meaning: The "unstable particle" as such is not a new state, but a certain superposition of the decay products. These latter states have a continuum of energy eigenvalues. The precise manner in which the superposition is constituted depends on our definition of the unstable particle, and the development of this wave packet as a function of time depends on the dynamics of the system. But eventually the packet spreads so that the decay products separate sufficiently far to be outside each other's influence. Once this state is reached the further expansion is purely kinematic, the amplitude decreasing inversely as the square root of the cube of time. Consequently, the overlap amplitude $a(t)$ also behaves thus. The requirement of gentle variation of the form factor is precisely that the corresponding interaction becomes negligible beyond some large but finite distance.

In view of this geometric interpretation we expect that any unstable system with well-behaved interactions would exhibit such a power law rather than an exponential law.

2.3.2 Two types of t dependence near $t = 0$

The short-time behavior of the probability $Q(t)$ given by two models are very different, which is correlated with the corresponding differences in the spectral moments. We recall that in the small t region, the survival amplitude can formally be expanded on terms of the spectral moments. i.e.

$$a(t) = \int e^{-i\lambda t}\rho(t)\,d\lambda \equiv 1 - i < \lambda > t - \frac{< \lambda^2 >}{2}t^2 + \dots\,. \tag{2.47}$$

On the other hand, in the small t region where $E_0 t \ll 1$, both models allow the expansion in power of $\sqrt{E_0 t}$. For model I, we obtain,

$$a(t) \to 1 - \text{const} + e^{i\pi/4}t^{\frac{1}{2}} \tag{2.48}$$

which is compatible with the fact that without the form factor, from inspection on (2.36), the first spectral moment is infinite. (2.48) leads to the decay rate, as $t \to 0$

$$\dot{Q}(t) \propto \frac{1}{\sqrt{-t}} \to \infty\,. \tag{2.49}$$

For model II, we obtain

$$a(t) \to 1 - i\ \text{const} + e^{-\frac{i\pi}{4}}t^{3/2} \tag{2.50}$$

which is compatible with $< \lambda >$ being finite and $< \lambda^2 >$ infinite, (2.50) leads to

$$\dot{Q} \propto -t^{1/2} \to 0\,. \tag{2.51}$$

Model II is an example of the proposition considered in Sec. 2.1, where the energy expectation value for the resonance state $\langle M|H|M\rangle$ is finite. From general arguments, we already concluded that as $t \to 0$, the decay rate should approach 0. Equation (2.51) is in agreement with this conclusion. On the other hand, if $\langle M|H|M\rangle$ does not exist, such as in model I, as $t \to 0$, the rate of decay is infinite. So the exponential law again does not hold. We see that in no case could the exponential law hold to arbitrarily small values of t. The conclusion that we have arrived at only depends on the basic notions of quantum mechanics; it is therefore quite general.

2.3.3 Repeated measurements in short-time and long-time limits

From the above discussions, we are led to two possibilities regarding the leading term behavior of $Q(t)$ as $t \to 0$:

$$Q(t) \to 1 - \frac{\alpha}{\beta}t^\beta \text{ and } \dot{Q}(t) \to -\alpha t^{\beta-1}, \quad \beta \neq 1\,. \tag{2.52}$$

Since $0 \le Q(t) \le Q(0)$, $\alpha > 0$ and $\beta > 0$ [we are not considering nonpolynomial dependences such as $t^\beta(\log t)^\gamma$], the ranges $\beta < 1$ and $\beta > 1$ behave quite differently. In one case the rate is becoming larger as $t \to 0$, and in other case it is vanishing.

Now consider as in Sec. II, the n measurements at times $t/n, 2t/n, \dots, t$. In the limit of $n \to \infty$, the time interval t/n tends to zero. Hence, for arbitrarily small t as $n \to \infty$,

$$Q_n(t) \to \left[1 - \frac{\alpha}{\beta}\left(\frac{t}{n}\right)^\beta\right]^n \to \begin{cases} 1 & \beta > 1 \\ 0 & \beta < 1 \end{cases}\,. \tag{2.53}$$

The first case corresponds to Zeno's paradox in quantum theory. In the second case the limit as $n \to \infty$ is 0. So continuous observation would lead to a zero lifetime. The lesson which we have learned here is that quantum mechanics prevents us from determining the life time of an unstable particle with "infinite precision". There is a built in tolerance of $\Delta t = T_1 \sim \frac{1}{E_0}$, where E_0 is the distance in the energy plane of the resonance pole from the first nearby singularity. The latter is usually the threshold of the closest decay channel. With the time

interval $0 < t < T_1$, the time evolution is not governed by the exponential decay law of the unstable particle. Depending on the dynamics of the system, the apparent life time could be substantially lengthened or shortened.

It is also interesting to ask what happens in the long-time limit. We have seen that with reasonable dynamics, the asymptotic form is purely kinematic. What about repeated measurement? The wave packet has expanded beyond the range of interaction in accordance with the $t^{-3/2}$ amplitude law: The measurement collapses this packet to the size of the original packet we call the unstable particle, and the time evolution begins again. For $\frac{t}{n} > T_2$, we then have the behavior $(t/n)^{-3n/2}$. We attenuate the unstable-particle amplitude by repeated observation. Naturally there is now no question of continuous observation.

2.3.4 Laboratory observations on unstable particle and possible resolution of Zeno's paradox

In these discussions we have dealt with the uninterrupted time development of an unstable particle. What can we conclude from this about laboratory observations on unstable particles? Is it proper to apply these considerations for particles that cause a track in a bubble chamber?

The uninterrupted time evolution was, we saw above, characterized by three regions: (i) $0 < t < T_1$, the small-time region where $Q(t) \simeq 1 - (\alpha/\beta)t^\beta$, $\beta > 0$; (ii) $T_1 < t < T_2$ the intermediate-time region where an exponential law holds; (iii) $t > T_2$ the large-time region where there is an inverse-power-law behavior. Out of these the intermediate-time region alone satisfies the simple composition law

$$Q(t_1)Q(t_2) = Q(t_1 + t_2)\,. \tag{2.54}$$

In this domain, therefore, a classical probability law operates and the results for the two-step measurement are the same as for the one-step measurement.

On the other hand, if the particle is making a track or otherwise interacting with a surrounding medium and is thus an open system, the considerations we have made do not apply. Instead we would have to account for the interpretation of the evolution by the interaction and a consequent reduction of the wave packet. The nondecay probability is now defined by the composition law:

$$Q(t_1, t_2, \ldots, t_n) = Q(t_1)Q(t_2)\cdots Q(t_n)\,. \tag{2.55}$$

Hence, if $t_1 = t_2 = \cdots = t_n - \tau$, we can write

$$Q(n\tau) = [Q(\tau)]^n\,, \tag{2.56}$$

so that for times large compared with τ the dependence is essentially exponential, independent of the law of quantum evolution $q(t)$. If the interruptions do not occur at equal intervals but are randomly distributed, the behavior would be more complex but this has been considered by Ekstein and Siegert [ES71] and furthered by Fonda et al [FGRW73]. The pure

exponential behavior is somewhat altered but the power-law dependence of the long-time behavior of the uninterrupted time evolution is no longer obtained.

We wish to call particular attention to this result: The long-time behavior of the closed and open systems are essentially different. Classical probabilistic notions do not apply to the closed system. The reason is not far to seek: Classical intuition is related to probabilities which are the directly "observed" quantities. But probabilities do not propagate. Propagation is for the amplitude. Despite this, it is difficult if not impossible to observe the differences between the two. To be able to see the difference we must reach the third domain $t > T_2$, but since T_2 is much much larger than the mean lifetime, by the time this domain is reached the survival probability is already many orders of magnitude smaller than unity. T_2 may be estimated in following manner. For large t, in (2.38) the integrand peaks at $k^2 = 0$. Within the peak approximation, for the regular terms in the integrand set $k^2 = 0$ and set

$$\xi(k) \to \xi(0) = 1\,. \tag{2.57}$$

This leads to

$$a_1(t) \sim \frac{i}{2\pi}\cdot\frac{4\delta}{k_0^4}\int_0^\infty e^{-k^2t}k^2dk = \frac{2i\delta}{\pi k_0^4}\cdot\frac{1}{t^{3/2}}\int_0^\infty e^{-u^2}u^2du;$$

so the magnitude

$$|a(t)| \sim \text{const}\left(\frac{\Gamma}{E_0}\right)^{5/2}\frac{1}{\Gamma t^{3/2}}\,.$$

T_2 is at the time where the exponential pole term has the same magnitude as this term, solving for

$$a_1(T_2) = \text{const}\left(\frac{\Gamma}{E_0}\right)^{5/2}\frac{1}{\Gamma T_2^{3/2}} = \exp\left(\frac{-\Gamma}{2}T_2\right)\,.$$

We obtain for $E_0 \gg \Gamma$,

$$T_2 \sim \frac{5}{\Gamma}\ln\frac{E_0}{\Gamma} + \frac{3}{\Gamma}\ln\left(5\ln\frac{E_0}{\Gamma}\right) \tag{2.58}$$

Notice our estimate here is not sensitive to the details of the form factor assumed as long as $\xi(0) = 1$, which is certainly more general than the models considered. Take the example of the decay of a charged pion, $\pi \to \mu\nu$

$$\Gamma = (3\times 10^{-8}\,\text{sec})^{-1}\,.$$

This leads to $T_2 \sim 190/\Gamma$. So, by the time the power law is operative, $Q(t) < 10^{-80}$. Clearly this is outside of the realm of detection.

In the small-time domain we have other physical considerations that may prevent the conditions for Zeno's paradox from manifesting. This is ultimately to be traced to the atomic structure of matter and therefore to our inability to monitor the unstable system continuously. For example, in our model II, where Zeno's paradox is operative, in the Appendix of ref. [CSM77] one finds $T_1 \sim 10^{-14}\Gamma \sim 10^{-21}$ sec for charged-pion decay.

On the other hand, we have check points at interatomic distances, a time of the order of $10^{-8}(3 \times 10^{10}) \simeq 3 \times 10^{-19}$ sec. We have no way of monitoring the natural evolution of a system for times finer than this. Within the present range of technology, according to the estimates, one is unable to observe the deviation of the exponential decay law.[NGCB88]

This resolution of Zeno's paradox is quite satisfactory as resolutions go in modern physics, but it raises a more disturbing question: Is the continued existence of a quantum world unverifiable? Is the sum total of experience (of the quantum world) a sequence of still frames that we insist on endowing with a continuity? (See also [Ca75]) Is this then the resolution of Zeno's paradox?

One special context which may point to the operation of the Zeno effect in high energy physics is in hadron-nucleus collisions. The collisions with successive nucleons inside a complex nucleus by an incoming hadron are in times of the order of the Zeno time and we would therefore expect a partial quenching of particle production in such nuclear collisions. This effect has been systematically studied by Valanju [Va80, VCS80]. The Zeno time in high energy hadron-nucleus and nucleus-nucleus collisions has also been subsumed as the "formation time" or the "healing time", see for examples [St75] and [Bi88].

Chapter 3

Multi-level unstable systems and Kaon system

In this chapter we study multi-level unstable quantum systems. The most common case in particle physics is the $K^0\overline{K}^0$ system, i.e. the "strange and anti-strange" meson system.

3.1 Introduction

About four decades ago, Gell-Mann and Pais [GP55] pointed out that K^0 and $\overline{K}^0$ communicated via the decay channels and therefore the decay contained two superpositions K_1 and K_2, which were the orthonormal combinations of K^0 and $\overline{K}^0$, which were, respectively, even and odd under charge conjugation. With the discovery of parity and charge conjugation violation and CP conservation, the terms K_1 and K_2 were redefined to correspond to, respectively, CP-even and -odd superpositions. With the discovery of the small CP violation, qualitatively new phenomena were obtained with nonorthonormal short- and long-lived neutral Kaons K_S and K_L. Lee, Oehme, and Yang [LOY57] formulated the necessary generalization of the Weisskopf-Wigner formalism, which has since been used in the discussion of the empirical data. This phenomenological theory has the same kind of shortcoming as the Weisskopf-Wigner theory and the Breit-Wigner formalism as discussed earlier. For subsequent theoretical discussions on the LOY model, see in particular the papers by Sachs and by Kenny and Sachs. [Sa63 and KS73].

Khalfin [Kh87,90] has pointed out some of these theoretical deficiencies and gave estimates of the departure from the Lee-Oehme-Yang (LOY) theory to be expected in the neutral-Kaon system as well as in the $D^0\overline{D}^0$ and $B^0\overline{B}^0$ systems. He asserts that there are possibly measurable "new CP-violation effects." We have reexamined this question in detail, formulated a general solvable model, and studied the exact solution [CS90]. While bearing out the need to upgrade the LOY formalism to be in accordance with the boundedness from below of the total Hamiltonian, our estimates of the corrections are more modest than Khalfin's. We review Khalfin's work to pose the problem and establish notation.

In the LOY formalism, the short- and long-lived particles are linear combinations of K^0

and $\overline{K}^0$:

$$\begin{pmatrix} |K_S\rangle \\ |K_L\rangle \end{pmatrix} = U \begin{pmatrix} |K^0\rangle \\ |\overline{K}^0\rangle \end{pmatrix}, \quad U = \begin{pmatrix} p & -q \\ p' & q' \end{pmatrix}, \tag{3.1}$$

with $|p|^2 + |q|^2 = 1$ and $|p'|^2 + |q'|^2 = 1$. The parameters p, q, p', q' are complex; their phases may be altered by redefining the phases of $|K_S\rangle$ and $|K_L\rangle$. Generally, the states are not orthogonal, but linearly independent:

$$\langle K_L|K_S\rangle = p'^*p - q'^*q \neq 0\,. \tag{3.2}$$

Let j denote $K^0, \overline{K}^0$, and α denote K_S, K_L, Equation(3.1) can be rewritten as

$$|\alpha\rangle = \sum_j |j\rangle\langle|\alpha\rangle \equiv \sum_j |j\rangle R_{j\alpha}\,, \tag{3.3}$$

where $R = U^T$. For a right eigenstate $|\alpha\rangle$, let the corresponding left eigenstate be $\langle\tilde{\alpha}|$. Then in terms of the oblique bases,

$$|j\rangle = \sum_\alpha |\alpha\rangle\langle\tilde{\alpha}|j\rangle = \sum_\alpha |\alpha\rangle R^{-1}_{\alpha j}\,. \tag{3.4}$$

Let the "time evolution matrix" of K^0 and $\overline{K}^0$ states be defined by

$$\begin{pmatrix} |K^0(t)\rangle \\ |\overline{K}^0(t)\rangle \end{pmatrix} = A(t) \begin{pmatrix} |K^0\rangle \\ |\overline{K}^0\rangle \end{pmatrix}, \tag{3.5}$$

with $A_{jk}(t) = \langle j|e^{iHt}|k\rangle$, and the corresponding matrix in the K_S and K_L bases by

$$\begin{pmatrix} |K_S(t)\rangle \\ |K_L(t)\rangle \end{pmatrix} = B(t) \begin{pmatrix} |K_S\rangle \\ |K_L\rangle \end{pmatrix}, \tag{3.6}$$

with $B_{\alpha\beta}(t) = \langle\tilde{\alpha}|e^{-iHt}|\beta\rangle$. The matrices A and B can be related in the following way:

$$\begin{aligned} A_{kj} &= \sum_{\alpha,\beta} \langle k|\alpha\rangle\langle\tilde{\alpha}|e^{iHt}|\beta\rangle\langle\tilde{\beta}|j\rangle \\ &= (RBR^{-1})_{kj}\,. \end{aligned} \tag{3.7}$$

As in the LOY theory, for the time being, if we were to assume that K_L and K_S do not regenerate into each other, but otherwise have generic time evolutions:

$$B(t) = \begin{pmatrix} S(t) & 0 \\ 0 & L(t) \end{pmatrix}. \tag{3.8}$$

Then

$$\begin{aligned} A(t) &= RB(t)R^{-1} \\ &= \frac{1}{pq' + p'q} \begin{pmatrix} pq'S + qp'L & -pp'(S-L) \\ -qq'(S-L) & qp'S + pq'L \end{pmatrix}. \end{aligned} \tag{3.9}$$

At this point let us invoke CPT invariance, which implies $A_{11} = A_{22}$ or $pq'(S-L) = qp'(S-L)$. Since K_L and K_S are states with distinct masses and lifetimes, $S - L \neq 0$. In turn, $p/q = p'/q'$. The states $|K_S\rangle$ and $|K_L\rangle$ are defined only to within phases of our choice; we may therefore set $p' = p$ and $q' = q$. At this point we shall relax the normalization condition on p and q and write $|p|^2 + |q|^2 = \zeta^2$. The transformation matrix and its inverse are now given by

$$R = \frac{1}{\zeta}\begin{pmatrix} p & p \\ -q & q \end{pmatrix}, \; R^{-1} = \frac{\zeta}{2pq}\begin{pmatrix} q & -p \\ q & p \end{pmatrix}. \tag{3.10}$$

We shall adhere to this convention in the rest of this paper. Equation (3.9) also implies that the ratio of the off-diagonal elements, that is, the ratio of the transition amplitude of $\overline{K}^0$ to K^0 to that of K^0 to $\overline{K}^0$, is given by

$$r(t) = \frac{A_{12}(t)}{A_{21}(t)} = \frac{p^2}{q^2} = \text{const.} \tag{3.11}$$

To sum up, the assumptions that (i) K_S and K_L are definite superpositions of K^0 and $\overline{K}^0$ states, (ii) there is no regeneration between K_S and K_L, and (iii) CPT invariance holds, imply the constancy of $r(t)$. Khalfin's theorem [Kh87, 90] states that if the ratio $r(t)$ of (3.11) is constant, then the magnitude of this ratio must be unity. His proof goes as follows.

The matrix elements $A_{jk}(t)$ are given by the Fourier transform of the corresponding energy spectra, i.e.,

$$A_{jk}(t) = \int_0^\infty d\lambda e^{-i\lambda t} C_{jk}(\lambda), \tag{3.12}$$

where

$$C_{jk}(\lambda) = \sum_n \langle j|\lambda n\rangle\langle \lambda n|k\rangle. \tag{3.13}$$

The summation is over different channels. λ is the energy variable. To be precise, it is the difference between the relevant energy and the threshold value. So $\lambda = 0$ is the lower bound of the spectrum. Using the sesquilinear property of the inner product, i.e. $\langle A|B\rangle^* = \langle B|A\rangle$, (3.13) implies that

$$C_{jk}(\lambda) = C^*_{kj}(\lambda). \tag{3.14}$$

Now we explore the consequence when (3.11) holds. Denote $r(t)$ by the appropriate constant r, one may write

$$\begin{aligned} D(t) &= A_{12}(t) - rA_{21}(t) \\ &= \int_0^\infty d\lambda e^{-i\lambda t}\Big[C_{12}(\lambda) - rC_{12}(\lambda)\Big] \\ &= 0. \end{aligned} \tag{3.15}$$

Based on the integral representation, with λ being positive, $D(t)$ may now be extended as the function of the complex variable t. Since $e^{-i\lambda t} = e^{-i\lambda Re t} \cdot e^{\lambda Im t}$, the function $D(t)$ can

now be defined in the entire lower half-plane. By the Paley-Wiener theorem [PW34], $D(t)$ is also defined at the boundary of the function in the lower half plane. So

$$D(t) = 0, \text{ for } -\infty < t < \infty. \tag{3.16}$$

Inverse Fourier transform of $D(t)$ implies

$$C_{12}(\lambda) - r\,C_{21}(\lambda) = C_{12}(\lambda) - rC^*_{12}(\lambda) = 0, \text{or } |r| = 1. \tag{3.17}$$

This conclusion contradicts the expectation of the LOY theory. In particular, when there is CP violation, it is expected that

$$|r| = \left|\frac{p}{q}\right|^2 = \text{const} \neq 1. \tag{3.18}$$

We have investigated the situation in the framework of the Friedrichs-Lee model in the lowest section with the particle V_1 and its antiparticle V_2. They are coupled to an arbitrary number of continuum $N\theta$ channels. We express the time-evolution matrix in terms of pole contributions plus a background contribution. We show that because of the form-factor effect, both the correction to the pole contribution and the background contribution give rise to a tiny regeneration between K_L and K_S. This invalidates one of the original assumptions needed to deduce the constancy of the ratio $r(t)$. Therefore in the generic Fredrichs-Lee model, the assumption that K_L and K_S are fixed super position of K^0 and $\overline{K}^0$ states is not valid. In the remainder of this Chapter we set up the dynamical system which involves multilevels and multichannels and investigate the generalization of Khalfin's theorem. We will also look at the solution to the neutral Kaon problem beyond the Wigner-Weisskopf approximation. We show that in our solution the ratio $\frac{A_{21}(t)}{A_{12}(t)}$ does depend on time, which invalidates one of the assumptions of Khalfin theorem, and predicts insignificant but nonzero departure from LOY model values in the region where the resonance pole contribution is dominating.

3.2 Multi-level Systems and Time Evolution Matrix

3.2.1 Eigenvalue problem

In the generalized Friedrichs-Lee model, the Hamiltonian is given by

$$\begin{aligned} H &= \sum_{j,k} m_{jk} V_j^\dagger V_k + \sum_{n=1}^{N} \mu_n N_n^\dagger N_n + \int_0^\infty d\omega\omega\phi^*(\omega)\phi(\omega) \\ &\quad + \int_0^\infty d\omega \sum_{j,n} g_{jn}(\omega) V_j N_n^\dagger \phi^*(\omega) \\ &\quad + \int_0^\infty d\omega \sum_{j,n} g^*_{jn}(\omega) V_j^\dagger N_n \phi(\omega). \end{aligned} \tag{3.19}$$

Here the bare particles are V_1, V_2, $N_n (1 \le n \le N)$, and θ particles. The following number operators commute with the Hamiltonian:

$$\begin{aligned} Q_1 &= \sum_j V_j^\dagger V_j + \sum_n N_n^\dagger N_n \,, \\ Q_2 &= \sum_n N_n^\dagger N_n + \int d\omega \phi^*(\omega)\phi(\omega) \,. \end{aligned} \tag{3.20}$$

Denote the corresponding eigenvalues by q_1 and q_2. The Hilbert space of the Hamiltonian is divided into sectors, each with a different assignment of q_1 and q_2 values. We will only consider the eigenstates of the lowest nontrivial sector, where $q_1 = 1$ and $q_2 = 0$. Here the bare states are labeled by $|V_1\rangle$, $|V_2\rangle$, and $|n,\omega\rangle$, with $n = 1, 2, \ldots, N$. Since there are N independent continuum states, for each eigenvalue λ, there are N independent eigenstates which can be written as

$$|\lambda, n\rangle = \sum_j |V_j\rangle [a_\lambda]_{jn} + \int_0^\infty d\omega \sum_m |m,\omega\rangle [b_\lambda(\omega)]_{mn} \,, \tag{3.21}$$

where

$$[a_\lambda]_{jn} = \langle V_j|\lambda, n\rangle, \; [b_\lambda(\omega)]_{mn} = \langle m,\omega|\lambda, n\rangle \,. \tag{3.22}$$

In (3.21) the integration variable of the $|m,\omega\rangle$ state, ω, begins from 0. So it now stands for the difference between the energy of the state and the threshold energy.

Using the Einstein summation convention, the corresponding eigenvalue equation is given by

$$\begin{pmatrix} m_{ij} & g_{il}(\omega') \\ g^\dagger_{mj}(\omega) & \omega\delta(\omega-\omega')\delta_{ml} \end{pmatrix} \begin{pmatrix} [a_\lambda]_{jn} \\ [b_\lambda(\omega')]_{ln} \end{pmatrix} = \lambda \begin{pmatrix} [a_\lambda]_{in} \\ [b_\lambda(\omega)]_{mn} \end{pmatrix} . \tag{3.23}$$

For brevity, hereafter we will suppress the matrix indices. Equation (3.23) leads to

$$(\lambda I - m) a_\lambda = \langle g(\omega') b_\lambda(\omega')\rangle \,, \tag{3.24}$$

$$(\lambda - \omega) b_\lambda(\omega) = g^\dagger(\omega) a_\lambda \,, \tag{3.25}$$

$$\langle \cdots \rangle \equiv \int_0^\infty d\omega \cdots \,.$$

We choose the boundary condition such that, in the uncoupled limit, b_λ is given by

$$[b_\lambda(\omega)]_{mn} = \delta(\lambda - \omega)\delta_{mn} \,. \tag{3.26}$$

Such a solution is given by

$$b_\lambda(\omega) = \delta(\lambda - \omega) I + \frac{g^\dagger(\omega) a_\lambda}{\lambda - \omega + i\epsilon} \,. \tag{3.27}$$

Substituting (3.27) into (3.24) leads to

$$(\lambda I - m) a_\lambda = g(\lambda) + \left\langle \frac{g(\omega') g^\dagger(\omega')}{\lambda - \omega' + i\epsilon} \right\rangle a_\lambda \,, \tag{3.28}$$

or

$$a_\lambda = K^{-1} g \,, \tag{3.29}$$

where

$$\begin{aligned} K &= \lambda I - m - G(\lambda) \\ &= \begin{bmatrix} \lambda - m_{11} - G_{11} & -m_{12} - G_{12} \\ m_{21} - G_{21} & \lambda - m_{22} - G_{22} \end{bmatrix} , \end{aligned} \tag{3.30}$$

with

$$\begin{aligned} G(\lambda + i\epsilon) &= \left\langle \frac{g(\omega) g^\dagger(\omega)}{\lambda - \omega + i\epsilon} \right\rangle \\ &= \int_0^\infty d\omega \, \frac{g(\omega) g^\dagger(\omega)}{\lambda - \omega + i\epsilon} \,. \end{aligned} \tag{3.31}$$

3.2.2 Time evolution matrix

It follows from (3.31), that, for λ real, the 2×2 matrix G is

$$\begin{aligned} [G(\lambda + i\epsilon)]^\dagger &= \int_0^\infty d\omega \, \frac{g(\omega) g^\dagger(\omega)}{\lambda - \omega - i\epsilon} \\ &= G(\lambda - i\epsilon) \,. \end{aligned} \tag{3.32}$$

This in turn implies the identity that, for real λ,

$$\begin{aligned} G(\lambda + i\epsilon) - G^\dagger(\lambda + i\epsilon) &= -2\pi i g(\lambda) g^\dagger(\lambda) \\ &= K^\dagger(\lambda + i\epsilon) - K(\lambda + i\epsilon) \,. \end{aligned} \tag{3.33}$$

The time-evolution matrix is easily evaluated:

$$\begin{aligned} A_{kj}(t) &= \langle k| e^{-iHt} |j\rangle \\ &= \int_0^\infty d\lambda e^{-i\lambda t} \sum_n \langle k|\lambda n\rangle \langle \lambda n|j\rangle \\ &= \int_0^\infty d\lambda e^{-i\lambda t} [a(\lambda) a^\dagger(\lambda)]_{kj} \,. \end{aligned} \tag{3.34}$$

From (3.29) and (3.33),

$$\begin{aligned} aa^\dagger = K^{-1} g g^\dagger (K^{-1})^\dagger &+ K^{-1} \left[\frac{K^\dagger - K}{-2\pi i} \right] (K^{-1})^\dagger \\ &= \frac{i}{2\pi} [K^{-1} - (K^{-1})^\dagger] \,. \end{aligned} \tag{3.35}$$

Substituting (3.35) into (3.34), we get

$$A_{kj}(t) \quad I = \frac{i}{2\pi}\int_0^\infty d\lambda e^{-i\lambda t}\left\{K^{-1}(\lambda+i\epsilon) - \left[K^{-1}(\lambda+i\epsilon)\right]^\dagger\right\}_{kj} \tag{3.36}$$

But

$$\begin{aligned}\left[K^{-1}(\lambda+i\epsilon)\right]^\dagger &= \left\{[\lambda - m - G(\lambda+i\epsilon)]^\dagger\right\}^{-1} \\ &= [K(\lambda-i\epsilon)]^{-1}\,.\end{aligned} \tag{3.37}$$

Based on (3.37), (3.36) can be written in a contour integral representation (see Fig. 3.1):

$$\begin{aligned}A_{kj}(t) \quad I &= \frac{i}{2\pi}\int_C d\lambda e^{-i\lambda t}\left[K^{-1}(\lambda)\right]_{kj} \\ &= \frac{i}{2\pi}\int_C d\lambda e^{i\lambda t}\frac{N_{kj}(\lambda)}{\Delta(\lambda)}\,,\end{aligned} \tag{3.38}$$

where

$$\Delta = \det K\,, \tag{3.39}$$

and

$$N(\lambda) = \mathrm{Cof}K = \mathrm{Cof}\,(\lambda\delta_{kj} - m_{kj} - G_{kj})\,. \tag{3.40}$$

We recall the cofactor of the element of A_{kj} of a square matrix A equals to $(-)^{k+j}$ times the determinant of the matrix which A becomes when k^{th} row and j^{th} column are deleted.

Since $G(\lambda)$ is defined through the dispersion integral (3.31), the λ dependence of G, in turn, the integrand of (3.38) may be extended to the entire cut plane of λ.

3.2.3 Completeness relation

At $t = 0$, from (3.34) and (3.38),

$$\begin{aligned}A_{kj}(0) &= \int_0^\infty d\lambda \sum_n \langle k|\lambda n\rangle\langle\lambda n|j\rangle \\ &= \frac{i}{2\pi}\int_C d\lambda\frac{N_{kj}(\lambda)}{\Delta(\lambda)}\,.\end{aligned} \tag{3.41}$$

From (3.36) and (3.37) the asymptotic behaviors are

$$\begin{aligned}&N_{kj}(\lambda) \to \lambda^{n-1} \text{ for } k = j\,, \\ &N_{kj}(\lambda) \to \lambda^{n-2}, \text{ for } k \neq j\,, \\ &\Delta(\lambda) \to \lambda^n\,.\end{aligned} \tag{3.42}$$

Deform the contour as depicted in Fig. 3.1. Since the integrand is analytic, using (3.42),

$$A_{kj}(0) = -\frac{i}{2\pi}\int_{C'} d\lambda\frac{N_{kj}(\lambda)}{\Delta(\lambda)} = \delta_{kj}\,, \tag{3.43}$$

or

$$\int_0^\infty d\lambda\sum_n \langle k|\lambda n\rangle\langle\lambda n|j\rangle = \delta_{kj}\,, \tag{3.44}$$

which is the completeness relation.

3.3 Applications to neutral Kaon system

3.3.1 Formalism

So far our treatment has been general. Now we want to specialize to the neutral-K system. We identify K^0 and $\overline{K}^0$ as V_1 and V_2. The the K_S and K_L are the unstable particles which correspond to the second sheet zeros of the determinant of the matrix K,

$$K = \begin{pmatrix} \lambda - m_{11} - G_{11} & m_{12} + G_{12} \\ m_{21} + G_{21} & \lambda - m_{11} - G_{11} \end{pmatrix} \tag{3.45}$$

where we have applied CPT theorem and set $m_{22} + G_{22} = m_{11} + G_{11}$. The discontinuity of the G-matrix is given by

$$\begin{aligned}\frac{G_{kj}(\lambda+i\epsilon) - G^*_{kj}(\lambda+i\epsilon)}{2i} &= -\left[g(\lambda)g^\dagger(\lambda)\right]_{kj} \\ &= -\pi\sum_n \langle k|H|\lambda n\rangle\langle\lambda n|H|j\rangle\ , \quad \text{with } k,j = K^0, \overline{K}^0 .\end{aligned} \tag{3.46}$$

In the Weisskopf-Wigner approximation, $G_{kj}(\lambda)$ is replaced by its imaginary part evaluated at the resonance mass

$$G_{kj}(\lambda) = -i\frac{\Gamma_{kj}}{2} \tag{3.47}$$

This is the approximation of the LOY model, where eigenvalue problem of the type

$$K\psi = \lambda\psi, \text{ or } \begin{pmatrix} AB \\ CA \end{pmatrix}\begin{pmatrix} r \\ s \end{pmatrix} = \lambda\begin{pmatrix} r \\ s \end{pmatrix} \tag{3.48}$$

is considered.

We digress a little to examine the solution of this eigenvalue problem in order to establish the relationship between r and s and the mass and width parameters. For the neutral K-system,

$$A = m_{11} - i\frac{\Gamma_{11}}{2},\ B = m_{12} - i\frac{\Gamma_{12}}{2},\ C = m_{21} - i\frac{\Gamma_{21}}{2}\,.$$

The complex eigenvalues are

$$\lambda_L = m_L - i\frac{\Gamma_L}{2},\ \lambda_S = m_S - i\frac{\Gamma_S}{2}.$$

Substituting these quantities back in the eigenvalue equations, we obtain

$$\mathrm{Tr}\, K = 2A = \lambda_L + \lambda_S,\ \text{or}\ A = \frac{1}{2}(\lambda_L + \lambda_S) = m_{11} - i\frac{(\Gamma_L + \Gamma_S)}{4}. \tag{3.49}$$

In terms of the eigenvalues and the components of the corresponding eigenvectors,

$$\begin{aligned} B &= \frac{r}{2s}(\lambda_L - \lambda_S) \\ C &= \frac{s}{2r}(\lambda_L - \lambda_S) \end{aligned}$$

or

$$\left(\frac{r}{s}\right)^2 = \frac{B}{C}. \tag{3.50}$$

Making the correspondence between the definition of the K_L and K_S states defined earlier, for the K_L state we get

$$\frac{r}{s} = \sqrt{\frac{B}{C}} = \frac{p}{q},\ \text{or}\ \psi_L = N\begin{pmatrix} p \\ q \end{pmatrix} \tag{3.51}$$

and for the K_S state:

$$\frac{r}{s} = \sqrt{\frac{B}{C}} = \frac{p}{q},\ \text{or}\ \psi_S = N\begin{pmatrix} p \\ -q \end{pmatrix}. \tag{3.52}$$

3.3.2 The ratio: $\dfrac{A_{12}(t)}{A_{21}(t)}$.

We proceed to evaluate the ratio $A_{12}(t)/A_{21}(t)$ within the Weisskopf-Wigner approximation. Again we write

$$\Delta = (\lambda - \lambda_S)(\lambda - \lambda_L) \tag{3.53}$$

except now λ_S and λ_L do depend on Λ. We are interested in the effect due to λ-dependence of G. For our purpose we find it to be adequate to work with a common form factor and write

$$G_{kj}(\lambda) = -i\frac{\Gamma_{kj}}{2}F(\lambda) \tag{3.54}$$

where $\frac{\Gamma_{kj}}{2}$ is independent of λ. Then

$$\lambda_S = m_{11} - i\frac{\Gamma_{11}}{2}F(\lambda) + d(\lambda)$$

$$\begin{aligned} \lambda_L &= m_{11} - i\frac{\Gamma_{11}}{2}F(\lambda) - d(\lambda) \\ d(\lambda) &= \left[\left(m_{12} - i\frac{\Gamma_{12}}{2}F(\lambda)\right)\left(m_{12}^* - i\frac{\Gamma_{12}^*}{2}F(\lambda)\right)\right]^{1/2}. \end{aligned} \tag{3.55}$$

The transition amplitude

$$A_{12}(t) = \frac{i}{2\pi}\int_C d\lambda\, e^{-i\lambda t}\,\frac{m_{12} - i\frac{\Gamma_{12}}{2}F(\lambda)}{2d(\lambda)}\left[\frac{1}{\lambda - \lambda_S} - \frac{1}{\lambda - \lambda_L}\right]. \tag{3.56}$$

The contour C here is illustrated in Fig. 3.1. It is to be deformed according to Fig. 3.2, such that the integral can be written as the sum of pole contribution and the background contribution. We further assume that $F(\lambda)$ varies in hadronic scale ($\sim 1GeV$), so that it is a smooth function in the neighborhood of $\lambda = m_S, m_L$. Expanding $F(\lambda)$ about $\lambda = m_{11}$, at $\lambda = m_S$ and $\lambda = m_L$ the corresponding form factors are respectively given by:

$$F_S = 1 + F'd,\ F_L = 1 - F'd;\ d = d(m_{11}). \tag{3.57}$$

Deforming the contour in the manner indicated in Fig. 3.2, the pole term gives

$$A_{12}(t)\Big|_{\text{pole}} \simeq \frac{p}{2q}\left[(1 - \delta_{12})\,e^{-i\lambda_S t} - (1 + \delta_{12})\,e^{-i\lambda_L t}\right]$$

with

$$\delta_{12} = i\frac{\Gamma_{12}F'}{2}\frac{q}{p} \sim O\left(\frac{\Gamma_{12}}{2m_{11}}\right) \tag{3.58}$$

$$A_{21}(t)\Big|_{\text{pole}} \simeq \frac{q}{2p}\left[(1 - \delta_{21})\,e^{-i\lambda_S t} - (1 + \delta_{21})\,e^{i\lambda_L t}\right]$$

with

$$\delta_{21} = i\frac{\Gamma_{12}^*F'}{2}\frac{q}{p} \sim O\left(\frac{\Gamma_{12}}{2m_{11}}\right). \tag{3.59}$$

So

$$\Gamma(t)\Big|_{\text{pole}} \simeq \frac{A_{12}(t)}{A_{21}(t)}\Big|_{\text{pole}} = \frac{p^2}{q^2}\,(1 + \cdots) \tag{3.60}$$

where "$\cdots$" term carries a time-dependence wherever

$$\delta_{12} \neq \delta_{21}\ \text{or}\ \frac{\Gamma_{12}}{\Gamma_{12}^*}\cdot\frac{q^2}{p^2} \neq 1. \tag{3.61}$$

The amount of departure is bounded by the order of magnitude of δ_{12} which is $O\left(\frac{\Gamma_{12}}{m_{11}}\right)$.

For neutral Kaons,

$$\begin{aligned} \frac{\Gamma_{12}}{2} &\sim \frac{\Gamma_S}{2} \sim 5\times 10^{10}\ \mathrm{sec}^{-1} \\ m_{11} &= m_K - 2m_\pi \sim 200\mathrm{MeV} \sim 3\times 10^{23}\ \mathrm{sec}^{-1} \\ \text{So,}\qquad \delta &\sim 0.2\times 10^{-13}. \end{aligned} \tag{3.62}$$

The background term also contributes to the t dependence of the ratio $\Gamma(t)$. From general arguments it can be shown

$$\left|\frac{A_{12}(t)}{A_{21}(t)}\right|_{bk} = 1\,. \tag{3.63}$$

In the very small t region and in the very large t regions, where the background term contribution is significant and when $\frac{p}{q} \neq 1$, a further departure of the value of $\frac{p^2}{q^2}$ from the Weisskopf-Wigner approximation may be expected.

3.3.3 Regeneration effect

Next, we demonstrate that there is a regeneration effect in the present solution, which invalidates one of the assumptions stated in Sec. 3.1, leading to the conclusion of the constancy of the magnitude of the ratio r. The presence of the regeneration effect is inferred by the presence of the nondiagonal element in the time-evolution matrix B of (3.6). Based on (3.9) and (3.38),

$$\begin{aligned} B(t) &= R^{-1}A(t)R \\ &= \frac{i}{2\pi}\int d\lambda e^{-i\lambda t}\frac{R^{-1}NR}{\Delta}, \end{aligned} \tag{3.64}$$

with

$$R^{-1}NR = \frac{1}{2pq}\begin{bmatrix} 2pqN_{11} - (N_{12}q^2 + N_{21}p^2) & N_{12}q^2 - N_{21}p^2 \\ -N_{12}q^2 + N_{21}p^2 & 2pqN_{11} + (N_{12}q^2 + N_{21}p^2) \end{bmatrix}. \tag{3.65}$$

We focus our attention on the element B_{12}, which leads to the regeneration of K_S from K_L: i.e.,

$$\begin{aligned} B_{12} &= N_{12}q^2 - N_{21}p^2 \\ &= (m_{12} - i\frac{\Gamma_{12}}{2}F)q^2 - (m_{12}^*F)p^2 \\ &= -i(F-1)(\frac{\Gamma_{12}}{2}q^2 - \frac{\Gamma_{12}^*}{2}p^2)\,. \end{aligned} \tag{3.66}$$

In the last step we have used the relations $p^2 = m_{12} - i\frac{\Gamma_{12}}{2}$ and $q^2 = m_{12}^* - i\frac{\Gamma_{12}^*}{2}$. So

$$B_{12}(t) = \nu\frac{i}{2\pi}\int_C d\lambda e^{i\lambda t}\frac{F(\lambda)-1}{\Delta}\,, \tag{3.67}$$

where $\nu = 2\,Im(\frac{\Gamma_{12}}{2}m_{12}^*)$. So the regeneration correction occurs only when $\nu \neq 0$, i.e., when there is CP violation. Deforming the contour, we get

$$B_{12}(t) = B_{12}(t)\Big|_{\text{poles}} + B_{12}(t)\Big|_{\text{bk}}\,, \tag{3.68}$$

with

$$\begin{aligned} B_{12}(t)\Big|_{\text{poles}} &= \frac{\nu}{2d}\left[(F_S-1)e^{-i\lambda_S t} - (F_L-1)e^{-i\lambda_L t}\right] \\ &= \frac{\nu F'}{2}\left(e^{-i\lambda_S t} + e^{-i\lambda_L t}\right). \end{aligned} \tag{3.69}$$

and

$$B_{12}(t)\Big|_{\text{bk}} = -\nu J(t)\,. \tag{3.70}$$

$J(t)$ represents the background integral. It is complicated to evaluate $J(t)$ for general values of t. However, for both small t and large t regions for simple form of form factors, the background integral is manageable. In the small t-region, it can be shown that [CS90]

$$B_{12}(t) \propto \mathrm{Im}(\Gamma_{12}\,m_{12}^*)t\,. \tag{3.71}$$

Here first power in t is the expected time dependence for the transition amplitude. Further there is always the Zeno region, in the sense that frequent observation would inhibit the transition from the "1" state to "2" state and also vice versa. For large t,

$$B_{12}(t)\Big|_{bk} \propto \mathrm{Im}(\Gamma_{12}\,m_{12}^*)\,\frac{1}{t^{3/2}}\,. \tag{3.72}$$

Once again the inverse power law associated with a geometric expansion picture is obtained.

In summary we see from this analysis that a quantum system with two metastable states which communicate with each other exhibits interesting phenomena in its time evolution. For its short-time behavior the quantum Zeno effect obtains; for very-long-time behavior there is a regeneration effect even in vacuum unless the long- and short- lived superpositions are strictly orthogonal. In the Kaon complex the short-lived particle K_S has passed from the exponential regime to the inverse power regime before appreciable decay of the K_L or regeneration of the K_S takes place. The CPT invariance making the diagonal elements of the decay matrix in the $K^0, \overline{K}^0$ basis equal is crucial to the nature of the time evolution. In the study of communicating metastable states in atomic physics, such an additional constraint of CPT is not there; consequently the decay exhibits richer features. We will present the general study elsewhere. Suffice it to observe that the asymptotic and Zeno region time depedences are very much the same as with the case of a single metastable state decay: This is not surprising since the generic arguments apply without restriction to the number of channels involved.

Chapter 4

Generalized quantum system: one-level system

So far our attention has been mainly on the features in the time development of unstable quantum systems, which show the departure from pure exponential decay of the Breit-Wigner approximation. This deviation arises when one takes the continuum spectrum into account. Here resonance is a pole in the survival amplitude or more generally in a transition amplitude, on the second sheet. This is to be in contrast with the Breit-Wigner approximation, where the resonance pole(s) are on the physical sheet. The "physical sheet" and the "second sheet" designations here have important distinctions. From the requirement of causality, it can be shown that transition amplitudes are analytic on the physical sheet. The presence of complex poles on the physical sheet implies the violation of causality. Since we want to work with a causal theory, resonance poles must be identified with the second sheet poles and the deviation of the exponential behavior in the time evolution is expected. We then proceed now to consider the generalized quantum system through the use of analytic continuation. Within this framework, the resonance pole may be identified as a generalized quantum state.

4.1 Introduction

As alluded to in Chapter 1, orthodox quantum mechanics is formulated in a vector space over complex numbers with a sesquilinear inner product. [D54, Ma54] In most applications the vector space is a separable complete space and often taken to be a Hilbert space. [vN32, Bo66, Ro66] The vector space, except in cases of "spin" systems with a finite basis, is made up of L^2 functions of one or more variables or a vector of such functions. The dynamical variables are taken to be linear operators of finite norm. Among them the selfadjoint operators form a preferred class and the observables are usually identified with them.

But it is convenient to deal with unbounded operators like the canonical coordinate or momentum or the Hamiltonian. Such operators do not have an action on the whole vector space since they could make the length of the image vector unbounded and thus not in the space; so we have to restrict the "domain" of the unbounded operator.

Even a further departure is often needed: when we deal with an operator with a continuous spectrum it is useful to introduce ideal vectors [D54] with distribution-valued scalar products.

In the cases where the vector space is realized by functions of a certain class it may be possible to consider analytic continuation of such function spaces with an associated bilinear form but with two analytic vector spaces being defined: the basic vector space and the space of linear functionals on this space. Of course, this generalization could have been considered without analytic continuation. If the base space topology becomes stronger the dual space topology becomes weaker and vice versa. In a Hilbert space the two topologies are the same (completeness of all Cauchy sequences!) with a reflexive antilinear transformation connecting the base space (ket) vectors and the dual space (bra) vectors. [D54] In the context of density operators this has been emphasized by Segal [Se47]. In the context of vectors in a Hilbert space this formalism due to Gelfand [Ge67] and amplified by Bohm [Bo86] is called the Rigged Hilbert space. While such a generalization is by choice for Hilbert spaces, both in the Segal context and in the course of analytic continuation the dichotomy between the base space and the dual enters automatically.

Dirac introduced the notion of analytic continuation of vector spaces in the context of the "extensor" representations of the Lorentz group in the forties, which was followed up by Kuriyan, Mukunda and Sudarshan [KMS68] to obtain the master analytic representations of noncompact groups. Nakanishi [Na58] had employed the notion of an analytically continued set of "wave functions" in the context of a treatment of unstable particles in quantum mechanics. The first systematic generalization of the quantum vector space by analytic continuation was formulated by Sudarshan, Chiu and Gorini [SCG78]. Rigorous treatment of the problem with careful attention to functional analytic details have since been given [PGS80].

The problem of decaying particles, scattering resonances and generic metastable states in quantum physics continues to be of current interest. The long time behavior departing from exponential decay exhibited by Khalfin [Kh58], the short time Zeno behavior [Kh68, MS77] and the detailed transition behavior of quantum metastable excitations constitute a complex of rich phenomenology [CSM77]. It has been further enriched by the multitude of features in the neutral Kaon decay and that of other such particles [CS90] and in the cascade decay phenomena. Recently Yamaguchi [Ya88] has raised important questions about the behavior of decay amplitudes and the possibility that short- and long- lived Kaons are orthogonal whether CP is conserved or not. From a somewhat different point of view Tasaki, Petrosky and Prigogine [TPP91] have considered this question with special attention to the breaking of time symmetry in decay.

Apart from these questions there has been some lack of precision about analytic continuation, and about scattering amplitude singularities: not enough attention has been paid to redundant zeros and discrete states buried in the continuum.

Complex variables, analytic functions, and topology are only aids to the mathematical discussion of physical phenomena; and an essential part of the task is the proper identification and proper interpretation of the mathematical results. Not all quantum theories

involving analytic continuations are alike nor are their scope the same. We have found several treatments that are lacking in one aspect or the other. For example many authors act as if poles in the analytic continuation are the only relevant singularities [Bo89]. We show, on the contrary, that the treatment of scattering amplitudes involving unstable particles requires complex branch points. We have therefore made a specific attempt to spell out in some detail the theory that we introduce. The use of solvable models enables us to illustrate many relevant features of the theory.

The most important point that we emphasize is that only suitable dense sets in the analytically continued spaces have corresponding dense set of states in the space with which we start the analytic continuation. Individual states in one space may or may not have analytical partners in the generalized spaces. The analytic continuation is therefore basis dependent and not every vector in the continuation may have direct physical interpretation. The poles are examples of such objects.

The outline of our presentation below is as follows. In Secs. 4.2 and 4.3, the generalized vector space of quantum states is used to study the correspondence between the physical state space $\mathcal{H}$ and its continuation $\mathcal{G}$. We begin with the observation that the scalar product between an arbitrary vector *in the dense subset of analytic vectors* in $\mathcal{H}$ and its dual vector has an integral representation. While keeping the scalar product fixed, the analytic vectors may be "analytically continued" through the deformation of the integration contour. A typical analytically continued integral representation of present interest integrates along a deformed contour in the fourth quadrant of the complex energy plane and encircles those "exposed" singularities on the second sheet, if any, i.e. those between the real axis and the deformed contour. *The deformed contour together with the exposed singularities constitutes the generalized spectrum of the operator in the continued theory.*

In Secs. 4.4 and 4.5, simple two-body models, the Friedrichs-Lee model and the Yamaguchi model in the lowest sector are studied with special attention to the unfolding of the generalized spectrum. Here the "exposed" singularties, if present at all, are simple poles. We defer more complex situations involving multi-resonance levels and arbitrary number of two body decay channels to Chapter 5 and a case with 3-body decay channels to Chapter 6.

In Sec 4.6, we observe that the predictions based on $\mathcal{H}$ and that based on $\mathcal{G}$ are expected to be the same. Since a pure exponential time dependence is not possible for states in $\mathcal{H}$, this then should not be possible for states in $\mathcal{G}$. On the other hand, the Breit-Wigner resonance does correspond to a pure exponential decay and it realizes the semi-group of time evolution. However, in such a case one needs to give up the positivity of energy and define states with all possible values of energy from $-\infty$ to $+\infty$.

In Sec 4.7, we recall the two possible disparities between poles in the S-matrix and the discrete states in the Hamiltonian. In particular, there can be a pole in the S-matrix without the corresponding state in the complete states of the Hamiltonian. Conversely there may be a discrete state of the Hamiltonian, which does not have the corresponding pole in the S-matrix. We show that these disparities continue to be admissible in the generalized vector space. In Sec 4.8 we consider the analytic continuation of the probability function and the operation of time reversal invariance.

Our concluding remarks are given in Sec. 4.9. Two distinct views on what constitutes an unstable particle are contrasted. One view is to identify an unstable particle as a physical state of the system which ceases to exist as a discrete eigenstate of the total Hamiltonian. The survival amplitude of the unstable particle *cannot be ever strictly exponential in time.* There is no autonomy in its time development. *It ages.* So the unstable particle does not furnish a representation of the time translation group. The other view is to identify the unstable particle as a discrete state in the generalized space $\mathcal{G}$. It has a pure exponential time dependence. The time evolutions form a semi-group. While the latter appears to be elegant, it is deduced at the expense of giving up the very starting premise of the lower boundedness of the energy spectrum.

4.2 Vector spaces and their analytic continuation

4.2.1 Vector spaces $\mathcal{H}$ and $\mathcal{H}'$ in conventional formalism

Consider an infinite dimensional vector space $\mathcal{H}$ over the field of complex numbers [D54] with vectors $\psi, \phi, \ldots$. Then, if a, b are complex numbers $a\psi + b\phi$ is also a vector; and so are finite linear combinations. If $\left\{|e^{(r)}\rangle\right\}$ is a countable basis then any vector ψ can be approximated to any desired limit by linear combinations of the form $\Sigma a_n^{(r)}|e^{(r)}\rangle = |\psi_n\rangle$ where the sequence $\{|\psi_n\rangle\}$ converges to ψ. A linear operator is a linear map from vectors in $\mathcal{H}$ to vectors in $\mathcal{H}$. The linear functional mapping each vector in $\mathcal{H}$ to a complex number constitute the dual vector space $\mathcal{H}'$ to $\mathcal{H}$. A basis $\{f^{(s)}\}$ in the dual vector space $\mathcal{H}'$ may be obtained by considering the linear functional

$$|e^{(r)}\rangle \xrightarrow{f^{(s)}} \delta_{rs} \text{ and the correspondence : } |e^{(r)}\rangle \leftrightarrow \langle f^{(r)}| . \tag{4.1}$$

Thus we can put the basis vectors into one-to-one correspondence; but the correspondence is antilinear:

$$a|e^{(r)}\rangle + b|e^{(s)}\rangle \leftrightarrow a^*\langle f^{(r)}| + b^*\langle f^{(s)}| . \tag{4.2}$$

The linear functional can be thought of as the scalar product of vectors in $\mathcal{H}, \mathcal{H}'$ bilinear in them:

$$\phi \xrightarrow{\psi} (\psi, \phi) \equiv \langle\psi|\phi\rangle \;\; ; \;\; \psi\epsilon\mathcal{H}', \phi\epsilon\mathcal{H} ; \tag{4.3}$$

or as a sesquilinear form in $\mathcal{H}$ by making use of the antilinear correspondence (4.2) between bra and ket vectors.

Given the basis vectors and the notion of scalar products we can introduce the completeness identity. If we have a bra $\langle\psi|$ and a ket $|\phi\rangle$, we can define a linear operator by the vector valued linear functional:

$$|\chi\rangle \rightarrow \langle\psi|\chi\rangle \; |\phi\rangle , \tag{4.4}$$

and identify it with the linear operator

$$A = |\phi\rangle\langle\psi| . \tag{4.5}$$

In particular we can introduce the linear operator

$$\sum_r |e^{(r)}\rangle\langle e^{(r)}|,$$

which acting on any vector $|\phi\rangle$ reproduces itself:

$$\sum_{r=1}^{\infty} |e^{(r)}\rangle\langle e^{(r)}|\phi\rangle = \sum_{r,s} |e^{(r)}\rangle\langle e^{(r)}|a_s|e^{(s)}\rangle$$
$$= \sum_{r,s} a_s\delta_{rs}|e^{(r)}\rangle = |\phi\rangle .$$

Hence it is the unit operator:

$$\sum_{r=1}^{\infty} |e^{(r)}\rangle\langle e^{(r)}| = \mathbf{1}. \tag{4.6}$$

This is the *completeness identity* and provides a *resolution of the identity*. A linear operator V is *isometric* [Ri55] if for every vector ϕ,

$$\langle V\phi \,|\, V\phi\rangle = \langle \phi \,|\, \phi\rangle . \tag{4.7}$$

Given an operator A its *adjoint* operator $A^\dagger$ is defined by

$$\langle \phi|A\psi\rangle = \langle A^\dagger\phi|\psi\rangle . \tag{4.8}$$

An isometric operator V satisfies the relation

$$V^\dagger V = \mathbf{1}. \tag{4.9}$$

The adjoint is an antilinear operator valued function of operators. An operator whose adjoint coincides with itself is called *selfadjoint*.

$$A^\dagger = A. \tag{4.10}$$

An isometric operator is *unitary* if in addition to (4.9) it satisfies

$$VV^\dagger = \mathbf{1}. \tag{4.11}$$

If a linear operator C has the form

$$C = \sum_n c_n|e^{(n)}\rangle\langle e^{(n)}| \tag{4.12}$$

for some convergent sequence $\{c_n\}$ and some basis $\left\{|e^{(n)}\rangle\right\}$ is said to be *completely continuous*. A completely continuous operator is the discrete (possibly infinite) sum of *projections*:

$$C = \sum_n c_n\Pi_n \quad ; \quad \Pi_n = |e^{(n)}\rangle\langle e^{(n)}|, \tag{4.13}$$

with

$$\Pi_n\Pi_m = \Pi_n\delta_{nm} \quad ; \quad \sum_n \Pi_n = \mathbf{1}. \tag{4.14}$$

The expressions (4.12), (4.13) also give the *spectral decomposition* of a completely continuous operator [Ri55]:

$$C\,|e^{(n)}\rangle = c_n\,|e^{(n)}\rangle . \tag{4.15}$$

For any operator A we can consider the *resolvent* as the analytic operator-valued function

$$R(z;A) = (A - z\mathbf{1})^{-1}. \tag{4.16}$$

$R(z)$ is regular acting on $\mathcal{H}$ everywhere except for the values

$$z = c_n$$

which constitute the spectrum of A. More generally for any operator A, the set of points (discrete or continuous, finite or infinite) where the resolvent operator fails to be regular in $\mathcal{H}$ (i.e., the action of $R(z)$ considered as an analytic function of z is not regular for any vector in $\mathcal{H}$) is called the *spectrum* of A.

For a selfadjoint operator with a continuous spectrum there may be no normalizable eigenvectors in $\mathcal{H}$. In all the explicit examples we have considered the continuous spectrum has no normalizable eigenvectors. One can either introduce ideal eigenvectors (of infinite length!) following Dirac, or consider a continuous family of spectral projections $\Pi(\lambda)$ for eigenvalues "less than" λ by introducing a notion of ordering in the continuous spectrum (when it is possible!) and writing a Steiltjes operator valued integral generalizing the spectral decomposition and completeness identity (4.12), (4.13), (4.14):

$$A = \int \lambda d\Pi(\lambda) . \tag{4.17}$$

$$\int d\Pi(\lambda) = \mathbf{1}\,;\ \Pi(\lambda)\Pi(\mu) = \Pi(\lambda), \quad \mu \geq \lambda . \tag{4.18}$$

So far we have considered the generic form A, the Hilbert space $\mathcal{H}$ and the vectors in $\mathcal{H}$. In the study of quantum systems the space $\mathcal{H}$ is realized in terms of the states of the system and the generic form of the state vectors is in terms of square integrable functions of one or more real variables. A dense subset of such L^2 functions is the class of analytic functions (restricted to real values of the arguments).

4.2.2 Analytic continuation of vector spaces

This dense subset of $\mathcal{H}$ there can be analytically continued. But there are many choices of analytic L^2 functions with varying domains of analyticity and correspondingly many choices of $\mathcal{G}$ and $\tilde{\mathcal{G}}$. The dense sets of analytic functions form a partially ordered set; and continuations using functions analytic in a domain which coincide with the analytic continuation using functions analytic in another domain, and will coincide within their common domain

of convergence. Linear relationships are preserved; and we can define *analytic linear operators* to be those which acting on an analytic function produces another analytic function. Needless to say the notion of analytic continuation is in terms of the specific L^2 function realization of the space $\mathcal{H}$ and the domain in which $\mathcal{G}$ is defined depends on the dense subset chosen. Since the correspondence between vectors in $\mathcal{H}$ and $\mathcal{H}'$ is antilinear we must analytically continue these spaces separately to produce a family of generalized spaces $\mathcal{G}$ and $\tilde{\mathcal{G}}$.

The notion of resolvent and spectrum applies to the generalized family of spaces $\mathcal{G}, \tilde{\mathcal{G}}$. The eigenvectors are now *right* eigenvectors in $\mathcal{G}$ and *left* eigenvectors in $\tilde{\mathcal{G}}$. For every vector in $\mathcal{H}$ we have its dual vector in $\mathcal{H}'$. The product of the analytic continuations of a dense set of vectors in $\mathcal{H}$ (and hence $\mathcal{H}'$) are in $\mathcal{G}$, $\tilde{\mathcal{G}}$ and it may be called the norm of the vector in $\mathcal{G}$. With respect to this norm we can define Cauchy sequences.

Since the analytic continuation is for both $\mathcal{H}$ and $\mathcal{H}'$ to $\mathcal{G}$ and $\tilde{\mathcal{G}}$ scalar products and matrix elements of analytic linear operators are preserved. To this extent, the analytic vectors and operators can be thought of as having different representations in the family of spaces $\mathcal{G}, \tilde{\mathcal{G}}$ and these could be put in correspondence with the analytic vectors and linear operators in $\mathcal{H}$. However, the analytic continuation is not of the entire space $\mathcal{H}$ into the completion of $\mathcal{G}$ with the norm as defined as the product of vector in $\mathcal{G}$, $\tilde{\mathcal{G}}$ associated with the vectors in $\mathcal{H}$, $\mathcal{H}'$. In particular there are vectors in $\mathcal{G}$ which may not have a counterpart in $\mathcal{H}$ and vice versa. We shall find that there are discrete states in $\mathcal{G}$ which have no counterpart in $\mathcal{H}$.

Finally, since the analytic continuation depends on the functional form for the state vectors as a function of its arguments, there is a choice to be made of the relevant dynamical labels. In the study of Hamiltonian systems we often have a "*total energy*" label as well as the values of a *comparison Hamiltonian* energy. On writing the ideal eigenstates of the total Hamiltonian as a function of the comparison Hamiltonian energy we look for analytic vectors; this can be done if the total Hamiltonian *represented* in terms of the functions of comparison Hamiltonian energies is *analytic*. The existence of the comparison ("free") Hamiltonian and its essential role in scattering theory where the "in" and "out" states are defined has been known for some time. [Su62] Formal theory of scattering does make use of this representation to go "slightly off" the real axis as far as the *scattering amplitude* is concerned. The analytic continuation of scattering amplitude was extended to its various sheets by many authors. [Ka38, Hu48, Sa85] However except for the work of Nakanishi [N58] and of Sudarshan, Chiu and Gorini [SCG78] (see also Bohm [B80]) there was no intention to consider the analytic continuation of suitable dense sets in the state space $\mathcal{H}$ to the family $\mathcal{G}$.

4.3 Complete set of states in continued spaces

If $\{|\lambda\rangle\}$ is the set of ideal eigenvectors for a self adjoint nonnegative (total Hamiltonian) operator so that

$$\int_0^\infty \Pi(\lambda)d\lambda = \int_0^\infty |\lambda\rangle\langle\lambda| d\lambda = 1; \langle\lambda|\mu\rangle = \delta(\lambda - \mu). \tag{4.19}$$

The vector

$$|\phi\rangle = \int_0^\infty \phi(\lambda)\,|\,\lambda\rangle d\lambda \tag{4.20}$$

is a vector in $\mathcal{H}$ if

$$\int_0^\infty |\phi(\lambda)|^2 d\lambda < \infty. \tag{4.21}$$

Provided $\phi(\lambda)$ is analytic in λ in a suitable domain in the complex plane we could deform the contour to write the vector as a vector in $\mathcal{G}$: (see Fig. 4.1)

$$|\phi\rangle = \int_C \phi(z)|z\rangle dz. \tag{4.22}$$

The analytic continuation includes a simultaneous continuation of the bra vectors

$$\langle\psi| = \int_0^\infty \psi(\lambda)\langle\lambda|\, d\lambda \tag{4.23}$$

into a vector in $\tilde{\mathcal{G}}$:

$$\widetilde{\langle\psi|} = \int_C \widetilde{\psi(z)}\widetilde{\langle z|}\, dz. \tag{4.24}$$

The additional closed contours C_1 and C_2 encountered in the continuation (see Fig. 4.2) are typical of poles and branch cuts. For resonance in scattering we expect to find complex poles but for multiparticle states involving unstable particles we expect to have complex branch cuts. While Fig. 4.2 shows only one pole and one pair of branch points in the finite complex plane we may have more than one; and branch points may move to infinity. The completeness identity (4.6) gets modified to

$$\mathbf{1} = \int_C dz\,|z\rangle\widetilde{\langle z|} + \sum_{\text{poles}} |z_r\rangle\widetilde{\langle z_r|} + \int_{C_2} d\zeta|\zeta\rangle\widetilde{\langle\zeta|}. \tag{4.25}$$

Further, the scalar product remains unchanged in value:

$$\widetilde{\langle\psi|}\phi\rangle = \int_C \tilde{\psi}(z)\phi(z)\, dz + \sum_{\text{poles}} \tilde{\psi}(z_r)\phi(z_r) + \int_{C_2} \tilde{\psi}(\zeta)\phi(\zeta)d\zeta. \tag{4.26}$$

Here and in (4.24), $\tilde{\psi}(z)$ is the analytic continuation of the function $\psi^*(z^*)$:

$$\tilde{\psi}(z) = \psi^*(z^*); \tag{4.27}$$

and the norm of $|\psi\rangle$ is given by $\widetilde{\langle\psi|}\psi\rangle$. If we have a definite state $\psi(\lambda)$ (which may be thought of as the created unstable particle state) then the survival amplitude for the state is given by [MS77, CSM77]

$$A(t) = \widetilde{\langle\psi|}\, e^{-iHt}|\psi\rangle = \mathrm{tr}\left(|\psi\rangle\widetilde{\langle\psi|}\, e^{-iHt}\right) \tag{4.28}$$

where H is the (total) Hamiltonian and can be expressed in the form of a Fourier integral:

$$A(t) = \int_0^\infty |\psi(\lambda)|^2 e^{-i\lambda t} d\lambda. \tag{4.29}$$

There can be at most one zero. No such discrete state exists if

$$\alpha(0) = -m_0 + \int \frac{g^*(\omega')g(\omega')d\omega'}{\omega'} < 0\,. \tag{4.35}$$

On the other hand if for some value $\lambda = M > 0$, we have the twin conditions

$$g(M) = 0 \;\; ; \;\; \alpha(M) = 0. \tag{4.36}$$

Then we can have a discrete state overlapped by the continuum.

There is a continuous spectrum $0 < \lambda < \infty$ and a corresponding continuum of scattering states which are ideal states with continuum normalization: [Su62, He57]

$$\begin{aligned} |\Phi_\lambda\rangle &= (\eta_\lambda, \phi_\lambda(\omega))^T \equiv |\lambda\rangle \\ \eta_\lambda &= \frac{g^*(\lambda)}{\alpha(\lambda + i\epsilon)} \;\; ; \;\; \phi_\lambda(\omega) = \delta(\lambda - \omega) + \frac{g^*(\lambda)g(\omega)}{(\lambda - \omega + i\epsilon)\alpha(\lambda + i\epsilon)}\,. \end{aligned} \tag{4.37}$$

These states satisfy the orthonormality and completeness relations

$$\begin{aligned} \langle m|m\rangle &= 1, \quad \langle m|\lambda\rangle = 0, \\ \langle\lambda|\lambda'\rangle &= \delta(\lambda - \lambda'); \end{aligned} \tag{4.38}$$

and

$$|m\rangle\langle m| + \int d\lambda|\lambda\rangle\langle\lambda| = \mathbf{1}\,. \tag{4.39}$$

Here

$$|m\rangle = (\eta_0, \phi_0(\lambda))^T\,. \tag{4.40}$$

These calculations are already available in the literature and involve straightforward contour integration. If there is a discrete state buried in the continuum [WvN29, Si67, Su81], (4.36) and (4.37) show that there are two solutions at this value M: a discrete state of the form (4.34) with m replaced by M; and an ideal state with $\lambda = M$ which is a pure plane wave:

$$|M\rangle = \left(\frac{d\alpha}{d\lambda}\bigg|_{\lambda=M}\right)^{-\frac{1}{2}} \left(1, \; \frac{g(\omega)}{M - \omega}\right)^T, \tag{4.41}$$

$$|M\rangle' = \left(0, \; \delta(\lambda - M) + \begin{matrix}\text{nonsingular}\\ \text{terms}\end{matrix}\right)^T. \tag{4.42}$$

The state (4.41) would enter the completeness relation (4.39) and the orthonormality relations (4.38).

The S-matrix for the ideal scattering states reduces to a phase:

$$S(\lambda) = \alpha(\lambda - i\epsilon)/\alpha(\lambda + i\epsilon) \;\; ; \;\; 0 < \lambda < \infty\,. \tag{4.43}$$

If $g(\omega)$ is analytic in ω so is

$$\widetilde{g(\omega)} = g'(\omega) = g^*(\omega^*)\,. \tag{4.44}$$

This same survival amplitude can be computed in $\mathcal{G}, \tilde{\mathcal{G}}$ provided $|\psi\rangle$ is an analytic vector:

$$A(t) = \int_{C+C_1+C_2} dz\, \tilde{\psi}(z)\psi(z)\, e^{-izt}. \tag{4.30}$$

If the analytically continued bilinear quantity is explicitly known the pole contributions and the branch cut contributions can be calculated. This we shall do when we consider solvable models like the Friedrichs-Lee model [Fri48, L54] and the Cascade model [CSB92]. Suffices it to say that the survival amplitude can be defined for evolutions both forwards ***and backwards*** in time; and for all times the absolute value of the amplitude is bounded by unity.

For the generic case the poles of the S-matrix coincide with the discrete states in the generalized completeness identity (4.25). However, the existence of a pole in the S-matrix is ***neither sufficient nor necessary to have such additional discrete states in*** $\mathcal{G}$. This is due to possible existence of redundant poles and of discrete states buried in the continuum. We shall discuss this further in a later section of this paper.

4.4 Friedrichs-Lee model states

A simple solvable model [L54, Fri48, D27] is provided by a system with a discrete state and a one-dimensional continuum so that the vectors are of the form

$$(\eta, \phi(\omega))^T = \Phi \tag{4.31}$$

with

$$\langle\Phi|\Phi\rangle = \eta^*\eta + \int d\omega\phi^*(\omega)\phi(\omega)\,. \tag{4.32}$$

We choose a total Hamiltonian of the form

$$\begin{aligned} H\,(\eta, \phi(\omega))^T &= \lambda(\eta, \phi(\omega))^T \\ \lambda\eta &= m_0\eta + \int_0^\infty g^*(\omega')\phi(\omega')d\omega' \\ \lambda\phi(\omega) &= \omega\phi(\omega) + g(\omega)\eta\,. \end{aligned}$$

Define the function

$$\alpha(\lambda) = \lambda - m_0 - \int_0^\infty \frac{g^*(\omega')g(\omega')}{\lambda - \omega'}\, d\omega'\,. \tag{4.33}$$

If $\alpha(\lambda)$ has a real zero it is for a negative value m (unless $g(\omega)$ vanishes some place in the interval $0 < \omega < \infty$). If there is such a zero there is a discrete eigenvalue m for the Hamiltonian H:

$$\begin{aligned} \phi_0(\omega) &= \frac{g(\omega)}{m - \omega}\eta_0 \;\; ; \;\; \eta_0 = \left(\frac{d\alpha}{d\lambda}\bigg|_{\lambda=m}\right)^{-\frac{1}{2}} \\ H\,(\eta_0, \phi_0(\omega))^T &= m\,(\eta_0, \phi_0(\omega))^T\,. \end{aligned} \tag{4.34}$$

Then the continuum ideal states $|\lambda\rangle$ can be replaced by complex eigenvalue ideal states denoted by the same symbol $|\lambda\rangle$ which have branch cuts along a different contour Γ beginning at 0 and ending at infinity. To see this we consider the space of analytic functions in the region Δ bounded by Γ and the positive real axis for which the integral

$$\left|\int_\Gamma \phi^*(z^*)\phi(z)\,dz\right| < \infty\,. \tag{4.45}$$

The spaces $\mathcal{G}, \tilde{\mathcal{G}}$ consists of vectors $(\eta, \phi(z))^T, (\bar{\eta}, \widetilde{\phi(z)})$ with such functions $\phi(z)$. We further require that these functions $\phi(z)$ vanish sufficiently fast at infinity so that

$$\int_0^\infty |\phi(\omega)|^2\,d\omega = \int_\Gamma \phi^*(z^*)\phi(z)dz. \tag{4.46}$$

Note that the scalar product is between a vector in $\mathcal{G}$ and one in the dual space $\tilde{\mathcal{G}}$.

Along the contour Γ we can introduce a delta function $\delta(\lambda - z)$ defined by [Na58, SCG78]

$$\int_\Gamma \phi(z)\delta(\lambda - z)dz = \phi(\lambda)\,. \tag{4.47}$$

With this definition we can reinvestigate the eigenvalue problem

$$H\,(\eta, \phi(z))^T = \lambda(\eta, \phi(z))^T, \tag{4.48}$$

with z along the contour Γ. Eq. (4.48) implies

$$\begin{aligned}(\lambda - m_0)\eta &= \int_\Gamma g^*(z'^*)\phi(z')dz' \\ (\lambda - z)\phi(z) &= g(z)\eta.\end{aligned} \tag{4.49}$$

The continuum ideal vectors have

$$\begin{aligned}\eta_\lambda &= \frac{g^*(\lambda^*)}{\alpha(\lambda + i\epsilon)} \\ \phi_\lambda(z) &= \delta(\lambda - z) + \frac{g^*(\lambda^*)g(z)}{(\lambda - z + i\epsilon)\alpha(\lambda + i\epsilon)} \\ \alpha(z) &= z - m_0 - \int_\Gamma \frac{g^*(z'^*)g(z')dz'}{z - z'}\,.\end{aligned} \tag{4.50}$$

These are orthonormal; the computation follows the usual route. They are, together with the possible discrete state

$$\begin{aligned}\eta_0 &= \left(\alpha'(m)\right)^{-\frac{1}{2}}, \\ \phi_0(z) &= \frac{g(z)\eta_0}{m - z},\end{aligned}$$

also complete, provided $\alpha(m) = 0$ for some $m < 0$.

In case $m_0 \gg 0$, there would be no discrete state $(\eta_0, \phi_0(z))^T$. But if the contour Γ proceeds sufficiently far in the fourth quadrant there would be a complex zero z_1 for $\alpha(z)$ and a discrete state with

$$\begin{aligned}\eta_1 &= \left(\alpha'(z_1)\right)^{-\frac{1}{2}}, \\ \phi_1(z) &= \frac{g(z)\eta_1}{z_1 - z}\,.\end{aligned} \tag{4.51}$$

This state is orthogonal to the continuum states in $\mathcal{G}$ and enters as a discrete contribution to the completeness relation. Since $\alpha(z)$ is real analytic, if the contour Γ was in the upper half plane there would be a zero z_1^* for $\alpha(z)$ and a corresponding state. In both cases, the discrete state remains fixed and contributes to the complete set of states or not according to whether Γ crosses z_1(or z_1^*).

The demonstration of the completeness is the resolution of the identity in the form (see Fig. 4.3 for the contours defined.)

$$\mathbf{1} = \begin{cases} \int_\Gamma d\lambda|\lambda\rangle\langle\lambda| + |m\rangle\langle m|, & m^* = m < 0,\ \alpha(m) = 0; \\ \int_{\Gamma'} d\lambda\,|\lambda\rangle\widetilde{\langle\lambda|} + |z_1\rangle\widetilde{\langle z_1|}, & \alpha(z_1) = 0\,. \end{cases} \tag{4.52}$$

In doing the Γ or Γ' integrals we have to compute, for example

$$\begin{aligned}\int \phi^*_{\lambda^*}(z^*)\phi_\lambda(z')\,d\lambda &= \delta(z - z') + \frac{g^*(z^*)g(z')}{(z' - z - i\epsilon)\alpha(z' - i\epsilon)} \\ &+ \frac{g(z')g^*(z^*)}{(z - z' + i\epsilon)\alpha(z + i\epsilon)} + g^*(z^*)g(z')\int_\Gamma \frac{g^*(\lambda^*)g(\lambda)d\lambda}{(\lambda - z - i\epsilon)(\lambda - z' + i\epsilon)\alpha(\lambda + i\epsilon)\alpha(\lambda - i\epsilon)}\,.\end{aligned} \tag{4.53}$$

The last term can be rewritten as a contour integral encasing the contour Γ since

$$g^*(\lambda^*)g(\lambda) = \frac{1}{2\pi i}\,\{\alpha(\lambda) - \alpha^*(\lambda^*)\} \tag{4.54}$$

so that the last term becomes

$$g^*(z^*)g(z)\frac{1}{2\pi i}\int_{\tilde{\Gamma}} \frac{d\lambda}{(\lambda - z' + i\epsilon)(\lambda - z - i\epsilon)\alpha(\lambda)}\,. \tag{4.55}$$

The poles at $\lambda = z' - i\epsilon,\ z + i\epsilon$ cancel the third and second terms respectively while the remaining contribution would be proportional to the residue at any pole of $1/\alpha(\lambda)$. Note that it is the zeros of $\alpha(z)$ that count, not the blow up of $g^*(z^*)\,g(z)$.

This conclusion is further demonstrated in the computation of the survival amplitude of the "unstable particle" state $(1,0)^T$. Quite generally,

$$\left((1,0), e^{-iHt}(1,0)^T\right) = \int \eta^*_{\lambda^*}\eta_\lambda\, e^{-i\lambda t}d\lambda \tag{4.56}$$

$$= \int_\Gamma e^{-i\lambda t}\,\frac{g^*(\lambda^*)g(\lambda)}{\alpha^*(\lambda^*)\alpha(\lambda)}\,d\lambda = \frac{1}{2\pi i}\int_{\tilde{\Gamma}} \frac{e^{-i\lambda t}d\lambda}{\alpha(\lambda)}. \tag{4.57}$$

Again only the zeros of $\alpha(\lambda)$ contribute, not the singularities of $g^*(\lambda^*)g(\lambda)$. Any such pole of $g^*(\lambda^*)g(\lambda)$ is counterbalanced by a corresponding pole in $\alpha^*(\lambda^*)$.

Here we have acted as if poles are the only singularities encountered in the analytic continuation. But in many contexts there could be branch cuts. We shall discuss such a situation for the Cascade model.

4.5 Yamaguchi potential model states

A model related closely to the Friedrichs-Lee model is the separable potential model [Ya54] which in its lowest relevant sector has a one-dimensional continuum. The states in $\mathcal{H}$ are, then, $L^2(0,\infty)$ functions.

$$\left\{\Phi \ : \ \int_0^\infty \phi^*(\omega)\phi(\omega)d\omega \ < \infty\right\}.$$

We choose a total Hamiltonian of the form

$$(H\phi)(\omega) = \omega\phi(\omega) + \eta h(\omega)\int_0^\infty h^*(\omega')\phi(\omega')d\omega' \tag{4.58}$$

where $\eta^2 = 1$. Define the function

$$\beta(z) = 1 - \eta\int_0^\infty \frac{h^*(\omega')h(\omega')d\omega'}{z-\omega'}. \tag{4.59}$$

If $\beta(z)$ has a real zero, it will arise for $\eta < 0$, at $z = z_0 < 0$. In that case there is a discrete solution

$$\phi_0(\omega) = \frac{\eta h(\omega)}{z_0 - \omega}\,[\beta'(z_0)]^{-\frac{1}{2}};\ \eta = -1\ ;\ z_0 < 0. \tag{4.60}$$

There is a continuum of scattering states

$$\Phi_\lambda \ : \ \phi_\lambda(\omega) = \delta(\lambda-\omega) + \frac{\eta h^*(\lambda)h(\omega)}{(\lambda-\omega+i\epsilon)\beta(\lambda+i\epsilon)}. \tag{4.61}$$

These ideal states satisfy orthonormality

$$\langle 0|0\rangle = 1, \quad \langle\lambda|0\rangle = 0,$$
$$\langle\lambda|\lambda'\rangle = \delta(\lambda-\lambda');$$

and completeness

$$|0\rangle\langle 0| + \int d\lambda\,|\lambda\rangle\langle\lambda| = \mathbf{1}. \tag{4.62}$$

Of course if $\beta(z)$ has no zero, the discrete state $|0\rangle$ would be missing from this equation.

The S-matrix for the ideal scattering states reduces to a phase

$$S(\lambda) = \beta(\lambda - i\epsilon)/\beta(\lambda+i\epsilon)\ \ ,\ \ 0<\lambda<\infty. \tag{4.63}$$

If $h(\omega)$ is analytic in ω so is $h^*(\omega^*)$. Then we can continue the vector space $\mathcal{H}$ into $\mathcal{G}$ and get a spectrum along another contour Γ starting from the origin and going to infinity.

The dimensionless scattering amplitude (in $\mathcal{H}$) is given by

$$T(\omega) = \frac{\pi h(\omega)h^*(\omega)}{\beta(\omega+i\epsilon)} = \exp(i\theta(\omega))\,\sin\theta(\omega). \tag{4.64}$$

where $\theta(\omega) = \arg\beta(\omega - i\epsilon)$ is the phase shift. If we choose nonrelativistic kinematics so that

$$\omega = k^2/2\mu \tag{4.65}$$

the more conventional scattering amplitude (with the dimension of a length) is given by

$$\begin{aligned}\mathcal{T}(k) &= \frac{\pi|h(\omega)|^2}{k\beta(\omega+i\epsilon)} = \frac{e^{i\theta(\omega)}\sin\theta(\omega)}{k}\\ &= (k\cot\theta(\omega) - ik)^{-1}\end{aligned} \tag{4.66}$$

which manifestly satisfies unitarity. The total (s-wave!) cross section is given by

$$\sigma(\omega) = \frac{4\pi}{k^2}\,\sin^2\theta(\omega). \tag{4.67}$$

When analytic continuations are carried out the scattering amplitude $T(\omega)$ is continued to yield

$$T(z) = \frac{\pi h(z)h^*(z^*)}{\beta(z+i\epsilon)}\ ,\ z \text{ on } \Gamma. \tag{4.68}$$

$T(z)$ so defined may have poles due to complex zeros of $\beta(z)$ or due to poles in $h(z)h^*(z^*)$. The latter do not correspond to extra physical states: they are "redundant poles" (see below in Sec.4.7). If there are no complex zeros of $\beta(z)$ the completeness relation in the analytically continued space $\mathcal{G}$ is

$$\int_\Gamma dz|z\rangle\widetilde{\langle z|} = \mathbf{1}. \tag{4.69}$$

The explicit expression for the ideal states $|z\rangle$ and the proof of the completeness and orthogonality are straight forward. In many contexts there could be branch cuts. We shall discuss such a situation for the cascade model in Chapter 6.

4.6 Extended spaces and semigroup of the time evolution

We have so far formulated the passage from $\mathcal{H}$ to $\mathcal{G}$ as a correspondence between dense sets in $\mathcal{H}$ and in $\mathcal{G}$. With this understanding the basis in $\mathcal{G}$ is "the same" as in $\mathcal{H}$. Therefore when we know that a pure exponential decay time dependence is not possible for states in $\mathcal{H}$ (with a nonnegative spectrum for the total Hamiltonian) the same should also obtain

for *corresponding states* in $\mathcal{G}$. Furthermore since the time evolution (and regression) are implemented by unitary family of linear operators realizing the time translation *group*, the same would also be true of the states in $\mathcal{G}$. A pure exponential decay or a Steiltjes integral over damped exponentials would then not be possible with states obtained by analytic continuation of physical states.

One can, however ask what property has to be relaxed to realize an extended space $\widetilde{\mathcal{H}}$ and its corresponding continuation $\widetilde{\mathcal{G}}$ so that a semigroup of time evolutions can be realized. These semigroups would, generally, be realized by an isometry which is not, however, unitary. After all, an unrestricted Breit-Wigner resonance [B36] with its Lorentz line shape does correspond to pure exponential decay (for positive time). We need to relax the positivity of energy and define states with all possible values of energy. In this case we can realize semigroups of time evolution [Su91].

Let $\psi(\lambda)$ be a vector in a Hilbert space $\mathcal{H}$,

$$\int_0^\infty |\psi(\lambda)|^2 d\lambda \;=\; 1 \;;\; \psi(\lambda) = 0, \lambda < 0. \tag{4.70}$$

We enlarge it into $\mathbb{H}_\pm$, where $\Psi(\lambda)$ is defined for negative values of λ also, in such a fashion that it is analytic in a half plane:

$$\Psi_\pm(z) = \frac{\mp}{2\pi i}\int_0^\infty d\lambda \frac{1}{\lambda - z \pm i\epsilon}\psi(\lambda). \tag{4.71}$$

These functions are *analytic* in the two *halfplanes* and their sum is equal to $\psi(\lambda)$.

$$\psi(\lambda) = \Psi_+(\lambda) + \Psi_-(\lambda). \tag{4.72}$$

On $\Psi_+(\lambda)$ the time evolution for positive times is realized by a contractive semigroup:

$$\Psi_+(z;t) = T_+(t)\Psi_+(z) = -\frac{1}{2\pi i}\int_0^\infty d\lambda e^{-i\lambda t}\frac{1}{\lambda - z + i\epsilon}\psi(\lambda) \tag{4.73}$$

$$\begin{aligned} &T_+(t_1)T_+(t_2) = T_+(t_1+t_2) \;\;,\; t_1, t_2 > 0 \\ &T_+(t) = 0, \;\; t < 0 \;\;;\;\; T_+(0+) = 1. \end{aligned} \tag{4.74}$$

By the converse of a theorem of Titchmarsh [Ti37]

$$\widetilde{\Psi}_\pm(\tau) \equiv \int_{-\infty}^\infty \Psi_\pm(\lambda)e^{-i\lambda\tau}d\lambda = 0, \;\pm\tau < 0. \tag{4.75}$$

Then

$$T_+(t)\widetilde{\Psi}_+(\tau) = \widetilde{\Psi}_+(\tau + t) \;\;,\; t > -\tau; \tag{4.76}$$

$$T_+(t)\widetilde{\Psi}_+(\tau) = 0 \;\;,\; t < -\tau. \tag{4.77}$$

Thus a semigroup evolution obtains on the half-plane analytic function $\Psi_+(\lambda)$. A similar conclusion obtains for the backward tracing of $\Psi_-(\lambda)$.

Given $\Psi_+(\lambda)$ we can continue it to a vector $\Psi_+(z)$ in $\tilde{\mathcal{J}}$ and the semigroup acts in $\tilde{\mathcal{J}}$ in the same fashion.

The functions $\Psi_+(z)$ is analytic in the half-plane by construction. They constitute the Hardy class of functions [R85] which are square-integrable along Re z for any negative imaginary part. *None* of this class *is a physical state* (expressible as linear combinations of states of nonnegative total energy). But many familiar unphysical states like the Breit-Wigner function

$$\Psi_+(\lambda) = \frac{\Gamma}{\sqrt{\pi}}\frac{1}{\lambda - \lambda_0 + \frac{i}{2}\Gamma} \tag{4.78}$$

are included in this Hardy class. In addition to such a single pole we could also have multiple poles and/or branch points. To obtain them we can use a perfectly physical state obtained as a linear combination of states like (4.37), (for 3-body case see e.g. states like (6.13) and (6.14) in Chapter 6) and carry out the linear maps (4.72) into the two Hardy class functions.

4.7 Redundant states and discrete states in the continuum

For the model discussed in the previous section, when the contour Γ passes through $z = M_1$ the continuum wave function (4.47) exhibits singularity at $z = M_1$, a complex eigenvalue. There is, when the contour justifies it, a discrete eigenstate with eigenvalue M_1. The scattering amplitudes also have singularities (poles) at the same point. People often take the poles of the scattering amplitude to correspond to unstable particles. It has, however, been known [Ma47, BPS72] that poles appear in the S-matrix (or the scattering amplitude) which do not correspond to discrete eigenstates of the Hamiltonian in $\mathcal{H}$. This is true of the (repulsive) exponential potential; and a number of phase-equivalent potentials [Ba49,Ne60] have been known for which some of the S-matrix poles are bound (discrete) states while for others are not. In the context of the Lee model and other such models, one could choose the poles to be redundant or genuine without changing the S-matrix. In the Lee model this corresponds to the distinction between the zeros of the denominator function $\alpha(z)$ and the poles of the form factor $f^*(z^*)f(z)$. Nor are these redundant singularities restricted to being isolated poles; for example the S-wave Yukawa potentials give a branch cut, [WO62] but with no continuum of (ideal) states entering the description. In all such cases the redundant singularities of the S-matrix do not correspond to states entering the complete set of states.

A similar situation obtains in the case of analytic continuation of the vector space $\mathcal{H}$ to $\mathcal{G}$. Consider the Lee model wave functions (4.50). They would develop singularities not connected with the spectrum of the Hamiltonian in $\mathcal{G}$ if the form factor $g(z)$ develop singularities. But these singularities do not give any contributions to the completeness identity since in these calculations we obtain the contour integrals involving $\frac{1}{\alpha(z)}$. The poles in $g^*(z^*)g(z)$ are matched by corresponding terms in $\alpha(z)$ and they disappear from the

contour integral. As the contour Γ smoothly deforms itself, it is not snagged by singularities of $g^*(z^*)g(z)$. The same situation obtains for the Cascade model; only the zeros of $\alpha(z)$ contribute to discrete state and only the branch cuts in $\gamma(\zeta)$ contribute to the scattering states involving an unstable particle.

A related phenomenon is that of states which contribute to the complete set of states which are located in the continuum but which do not contribute any singularity for the S-matrix. [Su81] This occurs when a zero of $\alpha(z)$ coincides with a zero of the form factor $g(z)$ as far as the Lee model is concerned. The spectrum is degenerate at this point M, $\alpha(M) = 0$ with a discrete state in $\mathcal{H}$ and an ideal state belonging to the continuum. In analytic continuation we can have complex zeros of $\alpha(z)$ where the scattering amplitude vanishes; nevertheless the complete set of states include these states. They also enter the computation of survival amplitudes (4.57).

For the Lee model we choose a form factor $g^*(z^*)g(z)$ and an $\alpha(z)$ such that

$$\alpha(M_1) = 0 \ ; \ g^*(z^*)g(z) \sim (z - M_1)^2 G(z) \tag{4.79}$$

for some complex M_1. Then the scattering amplitude vanishes at this point

$$T(z) \sim (z - M_1)t(z) . \tag{4.80}$$

The (ideal) state at this point is a "plane wave"

$$\tilde{\eta}_1 = 0 \ ; \ \phi_1(z) = \delta(z - M_1) + \text{nonsingular terms}, \tag{4.81}$$

(with no asymptotic diverging wave) which is degenerate in energy with the proper state in $\mathcal{G}$ with

$$\eta_1 = (\alpha'(M_1))^{-\frac{1}{2}}; \ \phi_1(z) = \frac{g(z)\eta_1}{M_1 - z} . \tag{4.82}$$

In a similar manner for the Cascade model, if the form factors have zeros along the cut beginning at the branch point μ_1 then the scattering amplitude vanishes at these points on the branch cut, but the (ideal) states $|z\rangle$ in (6.14) beginning at μ_1 exist and contribute to the completeness (and to the survival amplitude for the unstable A particle).

Thus the S-matrix singularities and the spectrum of states are not necessarily in correspondence.

Along with redundant poles we could also have redundant branch cuts from the "geometry of the potential". There will be no contribution from these to the completeness identity. Such branch cuts are familiar as the left hand (and the short- and circle-) cuts in partial wave dispersion relations.

4.8 Analytic continuation of survival probability and time reversal invariance

4.8.1 Analytic continuation of survival probability

The probability is the absolute value squared of the amplitude, which now involves the multiplication of two factors. One is $\langle\tilde{\psi}|\phi\rangle$, the inner product between the state in $\mathcal{G}$ and its dual in $\tilde{g}$. Both are defined along Γ. And the other factor corresponds to complex conjugations, which is the inner product of the corresponding state in $\mathcal{G}^*$ and the dual state in $\tilde{\mathcal{G}}^*$ defined along Γ^*. For the analytic continuation of a probability function, there are two distinct pairs of vector spaces:

$$\mathcal{G},\ \tilde{\mathcal{G}}, \quad \text{and} \quad \mathcal{G}^*,\ \tilde{\mathcal{G}}^*.$$

For a discrete state $|M\rangle$ where $M = m - \frac{i\Gamma}{2}$, its time dependence is characterized by

$$|M,t\rangle = e^{-iHt}|M,0\rangle = e^{-iMt}\,|M,0\rangle . \tag{4.83}$$

For the corresponding dual state in $\tilde{\mathcal{G}}$,

$$\langle\widetilde{M},t| = (|M^*,t\rangle)^\dagger = e^{iMt}\langle\widetilde{M,0}| . \tag{4.84}$$

Their inner product

$$\langle\widetilde{M,t}|\,Mt\rangle = e^{i(M-M)t}\langle\widetilde{M,0}|\,M,0\rangle = 1 . \tag{4.85}$$

Consider the corresponding complex conjugate space. For the discrete state in $\mathcal{G}^*$,

$$|M^*t\rangle = e^{-iM^*t}|M^*,0\rangle, \tag{4.86}$$

and the $\tilde{\mathcal{G}}^*$ space,

$$\langle\widetilde{M^*},t| \equiv \langle M,t| = e^{iM^*t}\langle M,0| = e^{iM^*t}\langle\widetilde{M^*,0}| , \tag{4.87}$$

with the inner product

$$\langle\widetilde{M^*,t}|\,M^*,t\rangle = \langle M,t|\,M^*,t\rangle = 1 . \tag{4.88}$$

4.8.2 Time reversal invariance

Decay signifies irreversibility, but it is still relevant to investigate questions of time reversal invariance. We recall some conventional wisdom's on time reversal. It is a "kinematic" transformation, which is independent of the Hamiltonian or any other time evolution. Time reversal requires an antilinear correspondence in the primary space state vectors. Under time reversal

$$\psi(z,t) \xrightarrow{T} U_T\psi^*(z^*,-t) \tag{4.89}$$

where U_T is some suitable unitary operator. When we have "in" and "out" states which are labeled by free particle momenta and helicities, under time reversal the states become respectively the "out" and "in" states, the momenta get reversed and the helicities are

unchanged. Although we will not make use of it in our following discussion we also mention that for spinning objects U_T is a rotation about the 2-axis by π.

$$U_T = \exp(i\pi J_2)\,. \tag{4.90}$$

For internal symmetries like $SU(3)$ where 3 and $\bar{3}$ are distinct, the time reversal can be invoked only on the density operators $\psi\psi^\dagger$ rather than on the field operator ψ alone. The probabilities are sesquilinear in the amplitude (or absolute value square) and are always real. The time reversal invariance predicts the equality between this probability and the corresponding time reversed quantity. We recall that the survival amplitude is $\langle\widetilde{M},0|\,M,t\rangle$. Apply the time reversal operation, we have

$$\begin{aligned}
&\langle M^*,0|\,M,t\rangle \xrightarrow{T} \langle M,0|\,M^*,-t\rangle^* = e^{-iMt}\,\langle M^*,0|\,M,0\rangle = e^{-iMt}\\
&\langle\widetilde{M},0|\,M,t\rangle = e^{-iMt}\langle\widetilde{M},0|\,M,0\rangle \xrightarrow{T} \left(e^{-iM^*(-t)}\right)^*\,\langle M,0|\,M^*,0\rangle = e^{-iMt}\\
&\langle\widetilde{M},0|\,M,t\rangle^* = e^{+iMt}\,\langle\widetilde{M}^*,0|\,M^*,0\rangle \xrightarrow{T} e^{+iM^*t}.
\end{aligned} \tag{4.91}$$

So the corresponding dependence of the time reversed probability is given by

$$|\langle M^*,0|\,M,t\rangle|^2 \xrightarrow{T} |\langle M,0|\,M^*,-t\rangle|^2 = e^{-\Gamma t}\,. \tag{4.92}$$

So that the survival amplitude involves the inner product of the state $|M,t\rangle$ in $\mathcal{G}$ with its dual state $\langle\widetilde{M},0| = \langle M^*,0|$ in $\tilde{\mathcal{G}}$, which leads to exponential decay. On the other hand, for the complex conjugation of the inner product between $\mathcal{G}^*$ and $\tilde{\mathcal{G}}^*$ states, which again leads to an exponential decay.

4.9 Two choices for unstable particle states

In our study of generalized quantum state spaces we have given exposition to analytic continuation of state spaces: and correspondence between dense sets of states in $\mathcal{H}$ and in $\mathcal{G}$. For analytic Hamiltonians the spectrum can be "analytically continued" in $\mathcal{G}$. The resolution of unity embodied in the completeness identity has alternate expressions. Incidentally this is an example of reducible representations of the (time) translation group having different decompositions in which no component of one decomposition is equivalent to any component of the other one. The notions of discrete states, of continuous spectra, of "in" and "out" states and exact expressions for the (ideal) states all obtain for these generalized spaces.

There are two views that one could take about what is an unstable particle. One is that it is a physical state of the system which is normalizable and which *ceases to exist as a discrete eigenstate of the total Hamiltonian.* If $|M\rangle$ denotes this normalized state, the survival amplitude is

$$A(t) = \langle M|e^{-iHt}|M\rangle = \int d\lambda\, e^{-i\lambda t}\langle M|\lambda\rangle\langle\lambda|M\rangle\,. \tag{4.93}$$

Here λ is integrated along the positive real axis. This amplitude cannot be ever strictly exponential in t and is bounded in absolute value by unity for all t, positive or negative. It

exhibits a Khalfin regime where it has an inverse power dependence and a Zeno regime where the departure of its absolute value from unity is quadratic in t. But for much of the intermediate region it is approximately exponential in $|t|$. One of the drawbacks of this picture of an unstable particle is that its survival amplitude does not furnish a representation of the time translation group or semigroup. The unstable particle so defined is not "autonomous". It *ages.*

The other picture of the unstable particle is as a discrete state in the generalized space $\mathcal{G}$ and as such having a pure exponential dependence. The time evolutions form a semigroup (for $t > 0$) the absolute value steadily decreasing exponentially. Such a state cannot have a counterpart physical state in $\mathcal{H}$. For negative values of t the state tends to blow up. If we start from any state in $\mathcal{H}$ which can be continued into $\mathcal{G}$, the result so obtained would never be a pure discrete decaying state, but that plus remnants of a continuum. We could extend $\mathcal{H}$ to $\tilde{\mathcal{H}}$ by relaxing the spectral condition $H \geq 0$ and obtain a state in $\mathbb{H}_\pm$ as in (4.72); then we could obtain a semigroup evolution law (4.76, 4.77). We have also seen that both the time evolution of the decay process and that of the time reversed process exhibit exponential decay. While this choice appears to be elegant, it is deduced at the expense of giving up the lower boundedness of the energy spectrum. We consider it to be the less desirable choice.

Finally, we observe that the spaces $\mathcal{H}$ and $\mathcal{G}$ that we have used are distinct spaces though there is one-to-one correspondence between dense sets of analytic vectors in $\mathcal{H}$ and $\mathcal{G}$. This correspondence can be implemented by an intertwining operator $V : \mathcal{H} \to \mathcal{G}$ with its inverse $V^{-1} : \mathcal{G} \to \mathcal{H}$ given by the formal Steiltjes integral

$$\begin{aligned}
V(z,x) &= \int d\alpha\, \psi_\alpha(z)\, \psi^*_\alpha(x)\,,\\
V^{-1}(z,x) &= \int d\alpha\, \psi_\alpha(x)\, \psi^*_\alpha(z^*) = \int d\alpha\, \psi_\alpha(x)\tilde{\psi}_\alpha(z)\,.
\end{aligned} \tag{4.94}$$

where $\{\psi_\alpha(x)\}$ is an analytic basis in $\mathcal{H}$ and $\{\psi_\alpha(z)\}$ its counterpart in $\mathcal{G}$. Any analytic operator, including the Hamiltonian in $\mathcal{H}$ has the counterpart in $\mathcal{G}$ defined by

$$A \to VAV^{-1}\,. \tag{4.95}$$

These operators V, V^{-1} are intertwining between the spaces $\mathcal{H}$ and $\mathcal{G}$.

Two further remarks are in order. First we can choose to concentrate on the eigenvalue equation being reduced to an equation for the unstable state alone by using one half of the equations to eliminate the daughter product amplitude. For the Fredrichs-Lee model

$$\begin{aligned}
(\lambda - M_0)\,\eta_0 &= \int_0^\infty f^*(\omega')\eta(\omega')d\omega'\\
(\lambda - \omega)\eta(\omega) &= f(\omega)\eta_0\,.
\end{aligned} \tag{4.96}$$

For the discrete state the second equation can be used to solve for $\eta(\omega)$ in terms of η_0:

$$\eta(\omega) = \frac{f(\omega)}{\lambda - \omega}\,\eta_0 \;\;;\;\; \lambda < 0\,. \tag{4.97}$$

Then

$$(\lambda - M_0)\eta_0 = \int \frac{f^*(\omega')f(\omega')d\omega'}{\lambda - \omega'}\eta_0 . \tag{4.98}$$

This is a nonstandard eigenvalue equation since the right handside is dependent on the eigenvalue. The solution is obtained by seeking the zenos of the function

$$\alpha(z) = z - m_0 - \int_0^\infty \frac{f^*(\omega')f(\omega')d\omega'}{\lambda - \omega'} . \tag{4.99}$$

Note that the normalization of the state includes the continuum states also so that instead of $|\eta_0| = 1$ we must choose

$$|\eta_0| = (\alpha'(M))^{-\frac{1}{2}} . \tag{4.100}$$

If the subspace for which the solution is attempted is not one-dimensional we would have a nonstandard matrix eigenvalue problem

$$A\psi = \lambda\psi = F(\lambda)\psi . \tag{4.101}$$

Such a situation obtains for the Kaon decay complex. The generic theory of such reduced non-standard eigenvalue problem is due to Livsic [Li57, Ho75].

The second remark contains improper models we have seen that the survival amplitude

$$A(t) = \langle\psi| e^{iHt} |\psi\rangle \tag{4.102}$$

can be expressed as a spectral integral

$$\int_0^\infty |\psi(\lambda)|^2 e^{-i\lambda t} d\lambda \tag{4.103}$$

with an absolute value no greater than unity. It is tempting to introduce an effective *non-self-adjoint* Hamiltonian K with the property

$$e^{-iKt} |\psi\rangle = A(t) |\psi\rangle . \tag{4.104}$$

Since for a large class of dynamical models there is an extended region for which $A(t)$ is well approximated by a complex exponential

$$A(t) \sim e^{-iE_0 t - \frac{1}{2}\Gamma t} \tag{4.105}$$

one could consider

$$K = E_0 - \frac{i}{2}\Gamma \tag{4.106}$$

as the effective Hamiltonian. This would be very similar to the Livsic operator $F(\lambda)$ that we mentioned above. But if K is really thought of as describing the decaying system then we get into inconsistencies: to begin with we get complex eigenvalues *before* analytic continuations. Such complex poles ("in the physical sheet") violate general principles like causality. As pointed out by Peierls, the complex poles must be obtained only by analytic continuation. We see this in the Livsic decomposition, the function $\alpha(z)$ with a cut along the real axis has no complex pole, only its continuation has a pole. Lack of care in discussing this question leads to misleading statements even in current literature.

So for complex value of M, the product

$$\langle K_S|K_L\rangle \tag{5.4}$$

is an ill-defined product. This is not an inner product! This difficulty was recognized soon after the proposal of the LOY model. The resolution was found through working with the left-eigenstates, or the dual states. We denote the dual states by $\langle\widetilde{K}_S|$ and $\langle\widetilde{K}_L|$. Here the orthogonality relations should hold,

$$\langle\widetilde{K}_S|K_L\rangle = 0, \quad \langle\widetilde{K}_L|K_S\rangle = 0$$

and we may choose

$$\langle\widetilde{K}_S|K_S\rangle = \langle\widetilde{K}_L|K_L\rangle = 1\,. \tag{5.5}$$

The notion of left-eigenstates is well known. In the context of the neutral Kaon system, it was explained in detail by Sachs [Sa63] over three decades ago. In his paper, Sachs worked in the same approximation as in the LOY model, where the K_L and K_S states are assumed to be the superposition of K^o and $\overline{K}^0$. The continuum component of the wave functions is being neglected. In the theory which we presented in Chapter 3, the continuum channel contribution is included explicitly. As we shall see it is with the inclusion of this piece which leads to the exact orthogonality relation.

Our discussions in the remainder of this Chapter are divided into four parts. In the first part, we recall the conventional solution of the theory as presented in Chapter 3. In the second part, we demonstrate how the exact orthogonality relation alluded to above is obtained and demonstrate that when the continuum contribution is suppressed it gives an approximate orthogonality relation. In the third part we present the completeness and orthogonality properties of the analytically continued wave functions, which display the generalized spectrum of discrete states with complex eigenvalues together with the continuum states defined along a complex contour. In the last part based on the present analytically continued theory, we present a derivation of the refined version of the Bell-Steinberger relation.

5.1 Solution of present multilevel model

In Chapter 3, we saw that the continuum eigenfunctions take the form

$$\psi_\lambda = \begin{pmatrix} a_\lambda \\ b_\lambda(\omega) \end{pmatrix} \tag{5.6}$$

where

$$b_\lambda(\omega) = \delta(\lambda-\omega)I + \frac{g^\dagger(\omega)a_\lambda}{\lambda-\omega+i\epsilon}\,, \tag{5.7}$$

and

$$K\,a_\lambda = g, \text{ with } K = \lambda I - m - G(\lambda)\,, \tag{5.8}$$

Chapter 5

Generalized multi-level quantum system

In Chapter 4 we discussed the analytic continuation in the context of one level quantum system. In the present Chapter we apply the same approach to the multi-level and multi-channel quantum system. Since in particle physics the neutral Kaon is the most familiar and a simple example of such a system, similar to the approach in Chapter 3, in this Chapter we will also devote most of our attention to the neutral Kaon system. The wave functions we will be looking at, as in Chapter 3, take on the general form labeled by running indices, so that it can be readily adapted to the multi-level, multi-channel situation.

We have seen in Chapter 3 the Lee-Oehme-Yang (LOY) model makes use of the Breit-Wigner approximation as applied to the neutral Kaon system. From Chapter 3, we saw that within the LOY model, the K_L and K_S wave functions are superpositions of K^0 and $\overline{K}^0$, with

$$\Psi_L = N\begin{pmatrix} p \\ q \end{pmatrix}, \quad \Psi_S = N\begin{pmatrix} p \\ -q \end{pmatrix} \tag{5.1}$$

Should one define the corresponding bra states to be the hermitian conjugate of the ket state, i.e. $\langle K_\alpha| = |K_\alpha\rangle^\dagger$, one would arrive at

$$\langle K_S|K_S\rangle = \langle K_L|K_L\rangle = N^2\left(|p|^2+|q|^2\right) \tag{5.2}$$

and

$$\langle K_S|K_L\rangle = N^2\left(|p|^2-|q|^2\right)\,. \tag{5.3}$$

One might query that if K_S and K_L are distinct eigenstates of the Hamiltonian, why are the two states not "orthogonal", i.e. $\langle K_S|K_L\rangle = 0$?

The answer is that the wave functions here are eigenfunctions of an effective Hamiltonian, namely the operator "K" defined in (3.48). While the total hamiltonian of (3.19) is hermitean the operator K is not. K is a 2 by 2 non-hermitean matrix. So ψ_L and ψ_S given above are eigenfunctions with complex eigenvalues. The operation of complex conjugation takes the state with eigenvalue M into another state with the complex conjugated eignenvalue M^*.

where

$$\begin{aligned} G(\lambda+i\epsilon) &= \left\langle \frac{g(\omega)g^\dagger(\omega)}{\lambda-\omega+i\epsilon}\right\rangle \\ &= \int_0^\infty d\omega\, \frac{g(\omega)g^\dagger(\omega)}{\lambda-\omega+i\epsilon}. \end{aligned} \tag{5.9}$$

If the discrete solution occurs at $\lambda = M$, then

$$b_M = \frac{g^\dagger(\omega)\, a_M}{M-\omega+i\epsilon} \tag{5.10}$$

where a_M satisfies the equation at $\lambda = M$

$$\begin{aligned} Ka_\lambda &= 0, \text{ or } [m+G(\lambda)]\, a_\lambda = \lambda a_\lambda \\ Ka_M &= K(M)a_M = (m+G(M))a_M = Ma_M\,. \end{aligned} \tag{5.11}$$

If we identify K_L and K_S to be the second sheet poles one may define the unitarity cut in such a manner as to expose these poles (see Fig. 5.1). The corresponding analytically continued wave function is given by

$$\psi_\alpha = \begin{pmatrix} \eta_\alpha \\ \phi_{p\alpha} \end{pmatrix} = N_\alpha \begin{pmatrix} c_{k\alpha} \\ \frac{g_{pj}(\omega)c_{j\alpha}}{M_\alpha-\omega+i\epsilon} \end{pmatrix} \tag{5.12}$$

where $+i\epsilon$ serves as a reminder that the second sheet is now partially exposed and M_α is above the Γ-cut. The corresponding dual wave-function of the discrete state at $\lambda = M_\beta$, as given by

$$\phi_\beta = (\chi_\beta, \zeta_\beta) = N_\beta \left(d_{\beta k},\ \frac{d_{\beta k}\tilde{g}_{kp}}{M_\beta-\omega+i\epsilon}\right). \tag{5.13}$$

Here again M_β is above the Γ-cut.

5.2 The inner product $\langle M_\beta^*|M_\alpha\rangle$

We denote the discrete eigenstate by K_L and K_S. Similar to the approach of Sec 3.1, we have

$$c_L = N_L \begin{pmatrix} p_L \\ q_L \end{pmatrix} \quad\text{and}\quad c_S = N_S \begin{pmatrix} p_S \\ -q_S \end{pmatrix}, \tag{5.14}$$

except that p and q now depend on λ, which are evaluated at $\lambda = M_L$ and M_S. The N's are the normalization factors yet to be determined.

For the dual wave function, we proceed to solve for $d_\beta = (r,s)$ based on

$$(r,s)\begin{pmatrix} A_\lambda & B_\lambda \\ C_\lambda & A_\lambda \end{pmatrix} = \lambda(r,s)\,. \tag{5.15}$$

Taking the transpose we have

$$\begin{pmatrix} A_\lambda & C_\lambda \\ B_\lambda & A_\lambda \end{pmatrix}\begin{pmatrix} r \\ s \end{pmatrix} = \lambda \begin{pmatrix} r \\ s \end{pmatrix}. \tag{5.16}$$

Comparison with (3.48) reveals that analogous to (3.50), it can then be shown that

$$\left(\frac{r}{s}\right)^2 = \frac{C_\lambda}{B_\lambda},\ \frac{r}{s} = \pm\sqrt{\frac{C_\lambda}{B_\lambda}}. \tag{5.17}$$

In other words, for the K_L and K_S dual states,

$$d_L = N_L(q_L, p_L),\ d_S = N_S(-q_S, p_S). \tag{5.18}$$

5.2.1 Orthonormality relations

The inner product of a discrete state labeled by α with another dual discrete state $\langle\beta|_D \equiv \langle\beta^*|$, is given by

$$\begin{aligned} \langle\beta^*|\alpha\rangle &= N_\alpha N_\beta \left(d_{\beta k},\ \frac{d_{\beta j}\tilde{g}_{jp}(\omega)}{M_\beta-\omega+i\epsilon}\right)\begin{pmatrix} c_{k\alpha} \\ \frac{g_{pj}(\omega)c_{j\alpha}}{M_\alpha-\omega+i\epsilon} \end{pmatrix} \\ &= N_\alpha N_\beta\, d_{\beta k}\left[\delta_{kj} + \int_\Gamma dw\, \frac{\tilde{g}_{kp}(\omega)g_{pj}(\omega)}{(M_\beta-\omega)(M_\alpha-\omega)}\right] c_{j\alpha} \end{aligned} \tag{5.19}$$

The discontinuity of K across the Γ-cut can be read off from (5.11), and is found to be

$$K(\lambda+i\epsilon) - K(\lambda-i\epsilon) = 2\pi i\tilde{g}(\lambda)g(\lambda) \tag{5.20}$$

Thus the integral in (5.19) can be deformed in the following manner: (see Fig. 5.2)

$$\begin{aligned} \int_\Gamma dw\, \tilde{g}_{kp}(\omega)g_{pj}(\omega)\cdots &= \frac{1}{2\pi k}\int_\Gamma dw\, [K_{kj}(\omega+i\epsilon) - K_{kj}(\omega-i\epsilon)]\cdots \\ &= \frac{-1}{2\pi k}\int_C dw\, K_{kj}(\omega)\cdots \end{aligned} \tag{5.21}$$

where as indicated in Fig. 5.2 the contour C wraps around the Γ-cut in a counter clockwise manner. The equations for the discrete solutions are

$$\begin{aligned} &\text{at } \lambda = M_\alpha,\quad K_{kj}(M_\alpha)c_{j\alpha} = 0, \quad\text{and} \\ &\text{at } \lambda = M_\beta,\quad d_{\beta k}K_{kj}(M_\beta) = 0\,. \end{aligned} \tag{5.22}$$

Inspection of the contours in Fig. 5.2 reveals

$$C_\infty = C_\alpha + C_\beta + C\,. \tag{5.23}$$

For $\alpha = K_L$ and $\beta = K_S$, using (5.18) the right hand side of (5.32) becomes

$$\begin{aligned} \langle S^*|L\rangle_V &= N_S N_L \left(-q_S\, p_S\right) \begin{pmatrix} p_L \\ q_L \end{pmatrix} \\ &= N_S N_L \left(p_S q_L - q_S p_L\right) . \end{aligned} \tag{5.33}$$

Strictly speaking since (p_L, q_L) and (p_S, q_S) are evaluated at M_L and M_S, $RHS \neq 0$. However, to the extent that the energy dependence of the coupling function $g(\omega)$ in the analytically continued Hamiltonian can be neglected, $p_L \approx p_S$, $q_L \approx q_S$, or $RHS \approx 0$.

This approximate result was discussed for instance in the work of Sachs [Sa63]. Our contribution in this section is the demonstration of the exact orthogonality relation between the state α and its dual state β. More specifically, when the form factor effect is taken into account, even though the discrete part alone (5.33) no longer vanishes, with the inclusion of the continuum contribution the orthogonality relation holds exactly.

5.3 Continued wave functions and continued spectrum

So far we have looked at the discrete solutions in the analytically continued theory with the continuum states defined along the contour Γ. Hereafter, we refer to it as the "Γ-theory". The continuum states and the dual states are defined along the same contour Γ. We proceed to display the complete set of wave functions including both the discrete states and the continuum states and to investigate their orthonormality properties and the completeness relations. Some of the calculations was given in Sec. 5.2 and the remainder can be found in Appendices A, B and C of ref. [CS93].

5.3.1 Complete set of wave-functions

<u>The discrete states</u>

From (5.12) and (5.13), the wave functions of the discrete states and corresponding dual wave functions are given by

$$\Psi_\alpha \equiv \begin{pmatrix} \langle V_i|\alpha\rangle \\ \langle \widetilde{N\theta_p}|\alpha\rangle \end{pmatrix} \equiv \begin{pmatrix} \eta_\alpha \\ \phi_{p\alpha} \end{pmatrix} = N_\alpha \begin{pmatrix} c_{k\alpha} \\ \frac{g_{pj}(\omega)c_{j\alpha}}{M_\alpha - \omega} \end{pmatrix} \tag{5.34}$$

$$\begin{aligned} \widetilde{\Phi_\beta} &\equiv \left(\langle\beta^*|V_i\rangle, \langle\beta^*|N\theta_p\rangle\right) \equiv \left(\chi_{\beta k}, \zeta_{\beta p}\right) \\ &= N_\beta \left(d_{\beta k}, \frac{d_{\beta k}\tilde{g}_{kp}(\omega)}{M_\beta - \omega}\right) \end{aligned} \tag{5.35}$$

<u>Continuum states</u>

The corresponding integrals are related by

$$I_C = -I_\alpha - I_\beta + I_\infty, \text{ with } I_C = \frac{-d_\beta}{2\pi k}\int_C \frac{dw K(\omega)c_\alpha}{(M_\beta - \omega)(M_\alpha - \omega)} . \tag{5.24}$$

Consider first the case $\beta \neq \alpha$. On account of (5.22)

$$I_\alpha = \frac{-1}{2\pi k}\int_{C_\alpha} \frac{dw}{(M_\beta - \omega)(M_\alpha - \omega)}\, d_\beta\, K(\omega)c_\alpha = 0 . \tag{5.25}$$

Similarly,

$$I_\beta = 0 . \tag{5.26}$$

From (3.31), the asymptotic behavior of $K(\omega)$ is

$$K_{kj}(\omega) \xrightarrow[\omega\to\infty]{} \omega\delta_{kj}() \tag{5.27}$$

$$\begin{aligned} (I_\infty)_{\beta\alpha} &= -\frac{1}{2\pi k}\int_{C_\infty} \frac{dw}{(M_\beta - \omega)(M_\alpha - \omega)}\, d_{\beta k}(\omega\delta_{kj})c_{j\alpha} \\ &= -d_{\beta k}\,\delta_{kj}\, c_{k\alpha} . \end{aligned} \tag{5.28}$$

Substituting (5.25), (5.26) and (5.28) into (5.24), using the definition (5.21), the inner product (5.19) becomes

$$\langle M_\beta^*|M_\alpha\rangle = N_\alpha N_\beta d_{\beta k}\left[\delta_{kj} + (-0 - 0 - \delta_{kj})\right] c_{j\alpha} = 0 . \tag{5.29}$$

For the case $\beta = \alpha$,

$$\begin{aligned} \langle M_\alpha^*|M_\alpha\rangle &= 1 = N_\alpha^2\, d_{\alpha k}\left[\delta_{kj} + \int \frac{\tilde{g}_{kq}(\omega)g_{qj}(\omega)dw}{(M_\alpha - \omega)^2}\right] c_{\alpha j} \\ &= N_\alpha^2\, d_{\alpha k} K'_{kj}\, c_{j\alpha} \end{aligned} \tag{5.30}$$

with $K' = \left[\frac{dK}{d\lambda}\right]_{\lambda = M_\alpha}$. Thus the normalization is given by

$$N_\alpha = \left[d_\alpha\, K' c_\alpha\right]^{-1/2} . \tag{5.31}$$

5.2.2 The "overlap function"

The contribution to the overlap function from the discrete V-components alone, i.e. V_1 and V_2 components or the K^0 and $\overline{K}^0$ alone, is given by

$$\langle\beta^*|\alpha\rangle_V \equiv \sum_i \langle M_\beta^*|V_i\rangle\langle V_i|M_\alpha\rangle = N_\beta N_\alpha\, d_\beta c_\alpha . \tag{5.32}$$

From (5.6) and (5.7), the continuum wave functions and their dual wave functions are given by

$$\begin{aligned}
\Psi^r_\lambda &\equiv \begin{pmatrix} \langle V_i|\lambda r\rangle \\ \langle \widetilde{N\theta_p}|\lambda r\rangle \end{pmatrix} \equiv \begin{pmatrix} \eta_{k\lambda} \\ \phi^r_{p\lambda} \end{pmatrix} \\
&= \begin{pmatrix} a_{k\lambda} \\ \delta(\lambda-\omega)\delta_{rp} + \frac{g_{pj}(\omega)a_{j\lambda}}{\lambda-\omega+i\epsilon} \end{pmatrix} \qquad (5.36)\\
\widetilde{\Phi^r_\lambda} &\equiv (\langle\lambda^* r|V_i\rangle, \langle\lambda^* r|N\theta_p\rangle) \equiv (\chi_{\lambda k},\ \zeta^r_{\lambda p}) \\
&= \left(\tilde{a}_{\lambda k},\ \delta(\lambda-\omega)\delta_{pr} + \frac{\tilde{a}_{\lambda j}\tilde{g}_{jp}(\omega)}{\lambda-\omega-i\epsilon}\right) \qquad (5.37)
\end{aligned}$$

From (5.8),

$$Ka = \tilde{g},\ a = K^{-1}\tilde{g},\ \tilde{a} = g\widetilde{K^{-1}}\,. \qquad (5.38)$$

5.3.2 Orthonormality relations

The identity operator in the bare basis is

$$I = |V_i\rangle\langle V_i| + \int_\Gamma dw|N\theta_p(\omega)\rangle\langle N\theta_p(\omega^*)| \qquad (5.39)$$

where summations over k and p are understood. The expected orthonormality relations are:

$$\begin{aligned}
\langle\beta^*|\alpha\rangle &= \langle\beta^*|V_i\rangle\langle V_i|\alpha\rangle + \int_\Gamma dw\,\langle\beta^*|N\theta_p\rangle\langle\widetilde{N\theta_p}|\alpha\rangle \\
&= \chi_{\beta k}\eta_{k\alpha} + \int_\Gamma dw\zeta_{\beta p}(\omega)\phi_{p\alpha}(\omega) = \delta_{\alpha\beta}, \qquad (5.40)\\
\langle\lambda^*, r|\alpha\rangle &= \chi_{\lambda k}\eta_{k\alpha} + \int_\Gamma dw\,\zeta_{\lambda p}(\omega)\phi_{p\alpha}(\omega) = 0, \qquad (5.41)\\
\langle\beta^*|\lambda, r\rangle &= \chi_{\beta k}\eta_{k\lambda} + \int dw\,\zeta_{\beta p}(\omega)\phi^r_{p\lambda}(\omega) = 0, \qquad (5.42)\\
\langle\lambda^*, r|\mu, s\rangle &= \chi^r_{\lambda k}\eta^s_{k\mu} + \int dw\,\zeta^r_{\lambda p}(\omega)\phi^s_{p\mu}(\omega) = \delta(\lambda-\mu)\delta_{rs}\,. \qquad (5.43)
\end{aligned}$$

The proof of (5.40) is given in the previous section (see (5.29) and (5.30)). The remaining relations are proved in Appendix A of ref. [CS93].

5.3.3 The completeness relations

The spectrum in the analytic continued theory consists of the discrete states K_L and K_S at the complex energies M_L and M_S respectively. This defines a space "$\mathcal{G}$", where the identity

operator is given by

$$I = |\alpha\rangle\langle\alpha^*| + \int_\Gamma d\lambda|\lambda r\rangle\langle\lambda^* r|\,. \qquad (5.44)$$

Again summation over the discrete labels α and r are understood. The identity operator leads to following set of completeness relations:

$$\begin{aligned}
\langle V_i|V_j\rangle &= \eta_{k\alpha}\chi_{\alpha j} + \int_\Gamma d\lambda\eta_{k\lambda}\chi_{\lambda j} = \delta_{kj} \qquad (5.45)\\
\langle\widetilde{N\theta_p}|V_i\rangle &= \phi_{p\alpha}\chi_{\alpha k} + \int_\Gamma d\lambda\phi_{p\lambda}\chi_{\lambda k} = 0 \qquad (5.46)\\
\langle V_i|N\theta_q\rangle &= \eta_{k\alpha}\,\zeta_{\alpha q} + \int_\Gamma d\lambda\eta_{k\lambda}\zeta_{\lambda q} = 0 \qquad (5.47)\\
\langle\widetilde{N\theta_p(\omega)}|N\theta_q(\omega')\rangle &= \phi_{p\alpha}\zeta_{\alpha q} + \int_\Gamma d\lambda\phi_{p\lambda}\zeta_{\lambda q} = \delta(\omega-\omega')\delta_{pq}. \qquad (5.48)
\end{aligned}$$

The proofs of these relations are given in Appendices B and C of ref. [CS93].

5.4 Derivation of the Bell-Steinberger relation

The Bell-Steinberger relation [BS65] is usually associated with the unitarity relation. It is instructive to see how the corresponding relation arises within the present framework. We recall that equation of the discrete solution is given by, see (5.11),

$$K^\alpha_{kj}\,a_j = 0\,, \qquad (5.49)$$

where

$$K_{kj}(\lambda) = \lambda\delta_{kj} - E_{kj}(\lambda) - m_{kj}\,. \qquad (5.50)$$

With analytic continuation one gets,

$$E_{kj}(\lambda) = \int_\Gamma \frac{g^+_{kq}(\omega^*)g_{qj}(\omega)}{\lambda-\omega+i\epsilon}\,. \qquad (5.51)$$

We deform the unitarity cut running along the positive real axis to the contour Γ, such that it "exposes" the discrete state solution. See Fig. 5.2. In terms of the E-function, the discrete solution at $\lambda = M_\alpha$ is given by

$$[m_{kj} + E_{kj}(\lambda)]\,a_\lambda = M_\alpha a_\lambda\,. \qquad (5.52)$$

Taking the hermitean conjugate for the discrete solution at $\lambda = M_\beta$ gives

$$a^+_\lambda\left[m^+ + E^+(\lambda)\right] = M^*_\beta a^+_\lambda\,. \qquad (5.53)$$

But

$$[E\,(M_\beta)]^+ \int_{\Gamma^*} dw'\,\frac{g^+(\omega'^*)g(\omega')}{M^*_\beta-\omega'-i\epsilon} \equiv E(M^*_\beta) \qquad (5.54)$$

where

$$\left[g^+(\omega^*)g(\omega)\right]^+ = g^+(\omega)g(\omega^*) = g^+(\omega'^*)g(\omega') \tag{5.55}$$

and $\omega' = \omega^*$ were used.

We assume each Yukawa coupling function in the Hamiltonian can be characterized by a coupling constant g_{pk} and a cutoff L_p. To evaluate $E(z+i\epsilon)$, where there is say one discrete solution in the lower half plane, we choose the contour Γ such that it barely misses the point z. The principal value part

$$\begin{aligned} P\left(E(z)\right) &= \sum_p g^+_{jp}g_{pk}\left[\int_0^{z-\delta}\frac{dw}{z-\omega+i\epsilon}+\int_{z+\delta}^{L_p}\frac{dw}{z-\omega+i\epsilon}\right] \\ &= \sum_p g^+_{jp}g_{pk}\left[\ell n\,\frac{z}{\delta}-\ell n\,\frac{L_p}{\delta}\right] \\ &= \sum_p g^+_{jp}g_{pk}\,\ell n\,\frac{z}{L_p}\,. \end{aligned} \tag{5.56}$$

Using the identity

$$\frac{1}{z-\omega\pm i\epsilon} = P\frac{1}{z-\omega}\mp i\pi\delta(z-\omega) \tag{5.57}$$

$$E(z+i\epsilon) = \sum_p g^+_{jp}g_{pk}\,\ell n\left(\frac{z}{L_p}e^{-i\pi}\right). \tag{5.58}$$

Assuming the bare mass matrix (m_{kj}) is hermitean, (5.52) and (5.53) lead to

$$\begin{aligned} & a^+_{\beta k}\left[E_{kj}(M^*_\beta)-E_{kj}(M_\alpha)\right]a_{j\alpha} \\ &= (M^*_\beta-M_\alpha)a^+_{\beta k}a_{k\alpha} = \sum_p\left(a^+_{\beta j}g^+_{jp}\right)\left(g_{pk}a_{k\alpha}\right)\left[2\pi i+\ell n\,\frac{M^*_\beta}{M_\alpha}\right] \end{aligned} \tag{5.59}$$

The last equality is a refined version of the Bell-Steinberger relation deduced based on the present theory.

For the Kaon system, both the mass and the width differences between K_L and K_S are small compared to the mean Kaon mass, *i.e.*

$$\frac{M^*_\beta-M_\alpha}{M_\alpha}\ll 1\,, \tag{5.60}$$

or

$$\ell n\left(\frac{M^*_\beta}{M_\alpha}e^{2\pi k}\right)\approx 2\pi i+\frac{M^*_\beta-M_\alpha}{M_\alpha}\approx 2\pi i\,. \tag{5.61}$$

Denote

$$\begin{aligned} \text{“}\langle\beta|\alpha\rangle\text{”} &\equiv a^+_{\beta k}a_{k\alpha}\,, \\ \gamma^\alpha_p &\equiv g_{pk}a_{k\alpha}\,, \\ \gamma^{\beta+}_p &\equiv a^+_{\beta k}g^+_{kp} \end{aligned} \tag{5.62}$$

Equation (5.59) in the approximation of (5.61) is reduced to the original form of the Bell-Steinberger relation:

$$\text{“}\langle\beta|\alpha\rangle\text{”}\left(M^*_\beta-M_\alpha\right)=2\pi i\sum_p\gamma^{\beta+}_p\gamma^\alpha_p\,. \tag{5.63}$$

5.5 Summary

We have presented a theory for the neutral Kaon system based on the extended Lee model. The spectrum of the theory consists of the discrete states on the second sheet, which are the K_L and K_S states and the continuum states defined along a contour Γ. The spectrum spans the space $\mathcal{G}$. The bra states here are dual states of the ket states. For the discrete states, for both the bra states and the ket states are at $\lambda = M$. For the continuum states, if the ket state is defined at $\lambda+i\epsilon$ along the upper lip of the contour Γ, the bra state is at $\lambda-i\epsilon$, along the lower lip of Γ.

Our analysis indicates that the nonvanishing of the “$\langle K_L|K_S\rangle$” in LOY theory is related to the fact that the quantity does not correspond to a properly defined amplitude. It is the properly defined amplitude, which corresponds to the inner product between a state in the $\mathcal{G}$ space and a dual state in the $\tilde{\mathcal{G}}$ space, $\langle K^*_L|K_S\rangle$ is expected to vanish. As we see in Sec. 5.2.1, it does.

Lastly based on our present theory, we derived a refined version of the Bell-Steinberger relation. The refinement differs from the original relation in the order of $O\left(\frac{M^*_L-M_S}{M_S}\right)$. Although this difference is very insignificant for the neutral Kaon, $D^0\bar{D}^0$, $B^0\bar{B}^0$ systems, it still remains a challenge to look for quantum systems in nature where such correction does lead to a detectable effect.

Chapter 6

The Cascade Model

Up to this point, we had confined our attention to 2-body channels. In the models we have investigated, either in the case of one level system of Chapter 4, or the multilevel system of Chapter 5, the second sheet singularities are simple poles. In this chapter we shall look at the quantum system which admits the decay into 3-body channels. Here in addition to second sheet poles, there may also be second sheet branch cuts. We consider a simple 3-body model, namely the cascade model which is an exactly solvable model [CSB92].

6.1 The model

We consider a Hamiltonian system [CSB90] where there are 3 classes of states for the unperturbed Hamiltonian; a particle A with bare energy M_0; a two-particle continuum with energy $\mu_0 + \omega$, $0 < \omega < \infty$; and a three-particle continuum with energy $\omega + \nu$, $0 \leq \omega, \nu < \infty$. We denote the amplitudes for these by η , $\phi(\omega)$ and $\psi(\omega, \nu)$ and the scalar product is given by

$$\eta_1^* \eta_2 + \int_0^\infty \phi_1^*(\omega)\phi_2(\omega)d\omega + \int_0^\infty \int \psi_1^*(\omega,\nu)\psi_2(\omega,\nu)\, d\omega d\nu \; < \infty \,. \tag{6.1}$$

The vector space $\mathcal{H}$ of states is the completion of this vector space. The total Hamiltonian and eigenvalue equation are given by

$$\begin{pmatrix} M_0 & f^*(\omega') & 0 \\ f(\omega) & (\mu_0+\omega)\delta(\omega-\omega') & g^*(\nu')\delta(\omega-\omega') \\ 0 & g(\nu)\delta(\omega-\omega') & (\omega+\nu)\delta(\omega-\omega')\delta(\nu-\nu') \end{pmatrix} \begin{pmatrix} \eta_\lambda \\ \phi_\lambda(\omega') \\ \psi_\lambda(\omega'\nu') \end{pmatrix} = \lambda \begin{pmatrix} \eta_\lambda \\ \phi_\lambda(\omega) \\ \psi_\lambda(\omega\nu) \end{pmatrix} . \tag{6.2}$$

6.2 The eigenstates

The energy eigenvalues are degenerate and infinitely degenerate once the three-particle channel becomes open. We can enumerate the (ideal) eigenstates of (6.2) in the following form:

$$|\lambda n\rangle \equiv \begin{pmatrix} \eta_{\lambda n} \\ \phi_{\lambda n}(\omega) \\ \psi_{\lambda n}(\omega\nu) \end{pmatrix} = \begin{pmatrix} \dfrac{f^*(\lambda-n)}{\alpha(\lambda+i\epsilon)} \dfrac{g^*(n)}{\gamma(n+i\epsilon)} \\ \dfrac{g^*(n)\delta(\lambda-\omega-n)}{\gamma(\lambda-\omega+i\epsilon)} + \dfrac{f(\omega)\,\eta_{\lambda n}}{\gamma(\lambda-\omega+i\epsilon)} \\ \delta(\nu-n)\delta(\lambda-\omega-n) + \dfrac{g(\nu)}{\lambda-\omega-\nu+i\epsilon}\,\phi_{\lambda n}(\omega) \end{pmatrix} , \tag{6.3}$$

where $0 \leq n \leq \lambda < \infty$, and

$$\begin{aligned} \alpha(z) &= z - M_0 - \int_0^\infty \frac{f^*(\omega')f(\omega')}{\gamma(z-\omega'+i\epsilon)} \\ \gamma(z) &= z - \mu_0 - \int_0^\infty \frac{g^*(\nu)g(\nu)}{z-\nu+i\epsilon}\, d\nu \,. \end{aligned} \tag{6.4}$$

If there is a real value μ such that

$$\gamma(\mu) = 0 \;\; ; \;\; \gamma' = \left.\frac{\partial\gamma(z)}{\partial z}\right|_{z=\mu} , \tag{6.5}$$

there exist a two-particle one parameter family:

$$|\tau\rangle = \begin{pmatrix} \eta_\tau \\ \phi_\tau(\omega) \\ \psi_\tau(\omega\nu) \end{pmatrix} = \begin{pmatrix} \dfrac{f^*(\tau-\mu)}{\sqrt{\gamma'}\,\alpha(\tau+i\epsilon)} \\ \dfrac{1}{\sqrt{\gamma'}}\,\delta(\tau-\mu-\omega) + \dfrac{f(\omega)}{\gamma(\tau-\omega+i\epsilon)}\eta_\tau \\ \dfrac{g(\nu)}{\tau-\omega-\nu+i\epsilon}\,\phi_\tau(\omega) \end{pmatrix} . \tag{6.6}$$

Note that λ and τ vary over ranges differing by μ so that

$$0 < \lambda, (\tau-\mu) < \infty \,.$$

If there is a real value M such that

$$\alpha(M) = 0 \;\; ; \;\; \alpha' = \left.\frac{\partial\alpha(z)}{\partial z}\right|_{z=M} , \tag{6.7}$$

then there exists a discrete state

$$|M\rangle = \begin{pmatrix} \eta_0 \\ \phi_0(\omega) \\ \psi_0(\omega,\nu) \end{pmatrix} = \frac{1}{\sqrt{\alpha'}} \begin{pmatrix} 1 \\ \dfrac{f(\omega)}{\gamma(M-\omega)} \\ \dfrac{g(\nu)\, f(\omega)}{\gamma(M-\omega)(M-\omega-\nu)} \end{pmatrix} . \tag{6.8}$$

6.3 Orthonormality relations

These states are (ideal) normalized. By a straightforward calculation they can be shown to be mutually orthogonal. We can also show them to be complete. The best way is to compute $\iint d\omega' d\nu'\ \psi^*(\omega'\nu')\,\psi(\omega'\nu')$ etc. and to convert it into a contour integral. If there are zeros of $\gamma(z)$ they will compensate the one-parameter continuum and so on, and we may obtain

$$\begin{aligned} &\langle M|M\rangle = 1\ ,\quad \langle M|\tau\rangle = 0,\quad \langle M|\lambda n\rangle = 0, \\ &\langle \tau'|\tau\rangle = \delta(\tau'-\tau)\ ,\ \langle \tau'|\lambda n\rangle = 0, \\ &\langle \lambda' n'|\lambda n\rangle = \delta(\lambda-\lambda')\delta(n-n')\,; \end{aligned} \tag{6.9}$$

and

$$\begin{aligned} &\iint \psi_{\lambda n}(\omega'\nu')\psi^*_{\lambda n}(\omega\nu)\, d\lambda dn + \int \psi_\tau(\omega'\nu')\psi^*_\tau(\omega\nu)d\tau + \ \psi_0(\omega'\nu')\psi^*_0(\omega\nu) = \delta(\omega-\omega')\delta(\nu-\nu'), \\ &\iint \psi_{\lambda n}(\omega'\nu')\phi^*_{\lambda n}(\omega)d\lambda dn + \int \psi_\tau(\omega'\nu')\phi^*_\tau(\omega)d\tau + \phi_0(\omega'\nu')\phi^*_0(\omega) = 0\,, \\ &\iint \psi_{\lambda n}(\omega'\nu')\eta^*_{\lambda n}d\lambda dn + \int \psi_\tau(\omega'\nu')\eta^*_\tau d\tau + \psi_0(\omega'\nu')\eta^*_0 = 0\,, \\ &\iint \phi_{\lambda n}(\omega')\phi^*_{\lambda n}(\omega)\ d\lambda dn + \int \phi_\tau(\omega')\phi^*_\tau(\omega)d\tau + \ \phi_0(\omega')\phi^*_0(\omega = \delta(\omega'-\omega)\,, \\ &\iint \phi_{\lambda n}(\omega')\eta^*_{\lambda n}\, d\lambda dn + \int \phi_\tau(\omega')\eta^*_\tau d\tau + \phi_0(\omega')\eta^*_0 = 0\,, \\ &\iint \eta_{\lambda n}\eta^*_{\lambda n}\, d\lambda dn + \int \eta_\tau\eta^*_\tau d\tau + \eta_0\eta^*_0 = 1\,. \end{aligned} \tag{6.10}$$

6.4 Continuation of scattering amplitudes and unitarity relations

To study analytic continuation [CS93] with complex branch cuts we choose M_0 and μ_0 sufficiently positive so that there is no real zero for $\gamma(z)$ or for $\alpha(z)$. Then the only states in

$\mathcal{H}$ which are (ideal) eigenstates are $|\lambda n\rangle$ and these states are complete in the sense of (6.10). The S-matrix elements are

$$\langle \lambda n,\ \text{out}|\lambda' n',\ \text{in}\rangle = \delta(\lambda-\lambda')\cdot\{\delta(n-n') + 2i\ T(n,n';\lambda)\} \tag{6.11}$$

$$T(n,n';\lambda) = -\pi\left\{\alpha(\lambda+i\epsilon)\eta_{\lambda n}\eta_{\lambda n'}\ +\ \frac{g^*(n)g(n)}{\gamma(n+i\epsilon)}\,\delta(n-n')\right\}. \tag{6.12}$$

Both the S-matrix element and the T-matrix element considered as a function of λ can be viewed as analytic functions of (complex) energy z with a branch cut $0 < z < \infty$. Since by hypotheses $\gamma(\zeta)$ has no real zero we would find a complex zero at μ_1 in the lower half plane as we deform the branch cut from that along the positive real axis to the appropriate contour in the fourth quadrant. This pole induces a branch cut in $T(n,n';\lambda)$ from μ_1 to infinity along a contour of our choice. So we can have, as illustrated in Fig. 6.1, the choice of the contours Γ_1, or $\Gamma_2+\Gamma_2'$, or $\Gamma_3+\Gamma_3'+\Gamma_3''$. For $\Gamma_2+\Gamma_2'$ we have the complex branch cut beginning at μ_1. For $\Gamma_3+\Gamma_3'+\Gamma_3''$ we have the complex branch cut beginning at μ_1 and the pole at M_1.

These analytic properties signal the possibility of analytic continuation of the space $\mathcal{H}$ into $\mathcal{G}$. For the contour Γ_1 we get the complete set of states $|z,\zeta\rangle$:

$$|z,\zeta\rangle = \begin{pmatrix} \dfrac{f^*(z^*-\zeta^*)\ g^*(\zeta^*)}{\alpha(z+i\epsilon)\ \gamma(\zeta+i\epsilon)} \\ \dfrac{g^*(\zeta^*)\delta(z-\zeta-\xi)}{\gamma(z-\xi+i\epsilon)} + \dfrac{f(\xi)\cdot f^*(z^*-\zeta^*)g^*(\zeta^*)}{\alpha(z+i\epsilon)\gamma(\zeta+i\epsilon)\gamma(z-\xi+i\epsilon)} \\ \delta(\zeta-\nu)\delta(z-\xi-\nu)+ \\ +\dfrac{g(\nu)}{z-\xi-\nu+i\epsilon}\left\{\dfrac{g^*(\zeta^*)\delta(z-\zeta-\xi)}{\gamma(z-\xi+i\epsilon)} + \dfrac{f(\xi)f^*(z^*-\zeta^*)g^*(\zeta^*)}{\alpha(z+i\epsilon)\gamma(\zeta+i\epsilon)\gamma(z-\xi+i\epsilon)}\right\} \end{pmatrix} \tag{6.13}$$

where z lies on the contour Γ_1 and we may choose $\xi+\nu$, ζ and ν also to lie on this contour. By a lengthy but straight forward calculation using the conversion of open contour integrals into closed contour integrals we can show that (6.13) constitutes a complete (ideal) orthonormal system. Neither the zeros of α nor of γ are in the complex plane cut along Γ_1 and consequently the closed contour integrals do not enclose any of the related singularities.

If on the other hand we choose the contour Γ_2 we have crossed the branch point at μ_1. This branch point "snags" the closed contour over which we integrate: and completeness is

restored only by including the generalized (ideal) states

$$|y\rangle = \begin{pmatrix} \dfrac{f^*(y^*-\mu_1)}{\sqrt{\gamma_1'}\,\alpha(y+i\epsilon)} \\ \dfrac{1}{\sqrt{\gamma_1'}}\delta(y-\mu_1-\xi) + \dfrac{f(\xi)}{\gamma(y-\xi+i\epsilon)}\cdot\dfrac{f^*(y^*-\mu_1)}{\sqrt{\gamma_1'}\,\alpha(y+i\epsilon)} \\ \dfrac{g(\nu)}{y-\xi-\nu+i\epsilon}\left\{\dfrac{1}{\sqrt{\gamma_1'}}\delta(y-\mu_1-\xi) + \dfrac{f(\xi)}{\gamma(y-\xi+i\epsilon)}\,\dfrac{f^*(y^*-\mu_1)}{\sqrt{\gamma_1'}\,\alpha(y+i\epsilon)}\right\} \end{pmatrix} \tag{6.14}$$

with

$$\gamma_1' = \frac{\partial\gamma(\zeta)}{\partial\zeta}\bigg|_{\zeta=\mu_1}. \tag{6.15}$$

Here y and $\xi+\mu_1$ are along Γ_2 and ξ lies on Γ_2'. Γ_2' is obtained from Γ_2 by displacing it by the fixed complex number μ'. The states $|y\rangle$ and $|z,\zeta\rangle$ in Eq. (6.14) and Eq. (6.13) now form a complete set. The contour Γ_2' is the spectrum of the "unstable" particle B (which has now become a "stable particle"!) scattering a θ particle with energy ξ. This scattering also obeys in addition to the generalized unitarity relation along Γ_2':

$$T(\zeta,\zeta';z) - T^*(\zeta^*,\zeta'^*;z^*) = \int_{\Gamma_2} d\zeta'' T^*(\zeta''^*,\zeta^*;z^*)T(\zeta'',\zeta';z)\,, \tag{6.16}$$

the unitarity relation:

$$T(\xi) - T^*(\xi^*) = T^*(\xi^*)T(\xi) \tag{6.17}$$

along Γ_2'. There is a technical point here. For the definition of the continued wave-functions, the contour Γ_2' is chosen through the "parallel transport" prescription stated above. However, for the continued unitarity relation, it can be shown that it is no longer necessary to be confined to the parallel transported contour Γ_2'.

In the context of the continuation of wave functions, further deformation of the contour does alter the states $|\tau\rangle$. When z and $\xi+\zeta$ are along the contour Γ_3, τ is along $\Gamma_3' = \Gamma_3+\mu_1$, see Fig 6.1. It could also uncover the discrete state $|M_1\rangle$ with

$$|M_1\rangle = \frac{1}{\sqrt{\alpha_1'}}\begin{pmatrix} 1 \\ \dfrac{f(\xi)}{\gamma(M_1-\xi)} \\ \dfrac{g(\nu)\,f(\xi)}{\gamma(M_1-\xi)(M_1-\xi-\nu)} \end{pmatrix} \tag{6.18}$$

which then needs to be included in the completeness relation.

Unitarity relations for the T-matrix are energy-local relations [GMRS71] and as such *do not mix the unstable particle scattering and stable particle scattering.*

Chapter 7

Summary and conclusions

Let us recapitulate some of the points considered in the present article. The Breit-Wigner approximation has been the phenomenological framework for the description of unstable states and it predicts a pure exponential decay. There are several shortcomings in this approach. The resonance is associated with a pair of complex conjugate poles on the physical sheet; this violates "causality". Breit-Wigner model seen as a continuous spectrum violates the semiboundedness condition, which in turn, leads to the violation of the second law of thermodynamics. So there is a need to describe unstable quantum system going beyond Breit-Wigner approximation, not only for minor technical corrections but for a conceptually satisfactory formulation.

Our discussions have been divided into two parts. In the first part, we see that insisting on the semi-boundedness of the spectrum, the time evolution of an unstable quantum system must deviate from strict exponential decay both in the very small time region and in the very large time region. In the neutral Kaon-type system in the very small and large t regions, there is the regeneration effect between K_L and K_S states.

From the study of solvable models , we saw that the departure from exponential law with the present experimental limits of time resolution are numerically insignificant. Nevertheless we find it useful for the sake of conceptual clarity to pursue a consistent generalized quantum mechanical framework for the description of unstable states. The predictions of this framework coincide with the Breit-Wigner approximation in the bulk of the exponential decay region and at the same time allows the extension to the very small and very large time regions. This is in analogy to the formulation of the relativistic theory in non relativistic domain which allows the natural extrapolation to the relativistic domain.

With this in mind, by means of analytic continuation we identify an unstable particle state as a discrete state in the generalized space $\mathcal{G}$ with complex energy eigenvalue. Here the continuum states are defined along some complex contour and the inner product and transition amplitudes are defined between states in $\mathcal{G}$ and its dual state in the corresponding dual space $\tilde{G}$.

Breit-Wigner approximation [BW36] was introduced in the 30's. A systematic and rigorous approach began with the paper by Sudarshan, Chiu and Gorini [SCG78], which proposed

the notion of generalized quantum states leading to a consistent treatment of an unstable quantum particle as a complex eigenvalue solution of the operator in $\mathcal{G}$ associated with a Hermitean hamiltonian in $\mathcal{H}$. The analytic continuation of this program was carried out for various models demonstrating that this approach can indeed be consistently implemented in various models. Within this framework, a resonance pole is a bonafide eigen state of the continuation of a hermitian hamiltonian with a complex energy eigenvalues. We have applied the same generalized framework to scattering problems. The analytically continued scattering amplitudes and the extended unitarity relations were presented. The generalized framework provides the essential ingredient needed for a consistent description of the scattering process involving resonances.

The present formalism of dual spaces differs from the Rigged Hilbert Space theory which also deals with dual spaces. But the dual spaces are the primary entities here. Some earlier papers in the literature claiming time asymmetry obtain their results by introducing unphysical states with energies unbounded from below.

The present approach is in one sense the completion of the Heisenberg's program to make dynamics out of directly measured quantities like spectral frequencies and intensities augmented by resonance positions and widths; and in another sense a further generalization of the Dirac Formalism of quantum theory in terms of ket and bra vectors. It is instructive that these old ideas contain the germs of many modern developments [Su93].

Bibliography

[AP93] Antoniou, I., and I. Prigogine, Physica **A192**, 443 (1993)

[Ba49] Bargman, V., Rev. Mod. Phys. **21**, 488 (1949).

[Bi90] Bialas, A., Proc. of Topical Conference on Eletronuclear Physics with Internal Targets, ed. G. Arnold, World Scientific (1990), p. 65 and references quoted there.

[BS65] Bell, J.S.,and J. Steinberger, *Proc. Intern. Conf. Elementary Particles*, Oxford p195 (1965). See Also R.E. Marshak, Riazuddin and C.P. Ryan, "*Theory of Weak Interactions in Particle Physics*", Wiley and Sons, Inc., 1969. See sec. 6.5.A.

[Bo66] Bohm, A., Boulder Lectures in Theoretical Physics **9A**, 255(1966).

[Bo80] Bohm, A., J. Math. Phys. **21**, 1040(1980); **22**, 2313(1981); Physica **124A**, 103 (1984).

[Bo86] Bohm, A., Quantum Mechanics: Foundations and Applications (Springer-Verlag, Berlin, 1986).

[Bo89] Bohm, A., and M. Gadella, in Dirac Kets, Gamow Vectors and Gelfand Triplets, edited by A. Bohm and J. D. Dollard, Springer Lecture Notes in Physics, Vol 348 (Springer-Verlag, Berlin 1989).

[Boh36] Bohr, N., Nature **137**, 344(1936).

[BB66] Bott-Bodenhausen, M., et. al., Phys. Lett. **20**, 212 (1966); **23**, 277 (1966).

[BPS72] Biswas, S. N., T. Pradhan and E. C. G. Sudarshan, Nucl. Phys. **B50**, 269 (1972).

[BW36] Breit, G., and E. P. Wigner, Phys. Rev. **49**, 519 (1936).

[Ca75] Capra, F. The Tao of Physics (Shambhala, Berkeley, 1975), p. 25.

[CKY93] Cho, Gi-chol, H. Kasai and Y. Yamaguchi, "The Time evolution of unstable particles", Tokai University preprint, TKU-HEP93/04.

[CSM77] Chiu, C. B., E. C. G. Sudarshan and B. Misra, Phys. Rev. **D16**, 520 (1977).

[CS90] Chiu, C. B., and E. C. G. Sudarshan, Phys. Rev. **D42**, 3712 (1990)

[CSB92] Chiu, C. B., E. C. G. Sudarshan and G. Bhamathi, Phys. Rev. **D45**, 884 (1992)

[CS93] Chiu, C. B., E. C. G. Sudarshan, "Theory of the neutral Kaon system", Center for Particle Physics preprint CPP-34, 1993.

[D27] Dirac, P. A. M., Proc. Roy. Soc. London **114**, 243 (1927).

[D54] Dirac, P. A. M., Principles of Quantum Meachnics, 4th ed. (Clarendon, Oxford, 1954), p.206, Eq. (52)

[DFG74] Desgasperis, A., L. Fonda, and G. C. Ghirardi, Nuovo Cimento **21A**, 471 (1974).

[ES71] Ekstein. H. and A. J. F. Siegert, Ann. Phys. (N.Y.) **68**, 509 (1971).

[Fe50] Fermi, E., "Nuclear Physics", p142, University of Chicago Press, Chicago, 1950.

[Fl73] Fleming, G., Nuovo Cimento **A16**, 232 (1973).

[Fl82] Fleming, G., Physics Letter **125B** 287 (1982)

[FGRW73] Fonda, L., G. C. Ghirardi, A. Rimini, and T. Weber, Nuovo Cimento **15A**, 689 (1973); Reports on Progress in Physics **41**, 587(1978).

[FT68] Frey, B. B., and E. Thiele, J. Chem. Phys. **4**, 3240 (1968).

[Fr48] Friedrichs, K. O., Commun. Pure Appl. Math. **1**, 361 (1948).

[Ga28] Gamow, G., Z. Phys. **51**, 204(1928).

[GS67] Gelfand, I. M., and G. F. Shilov, Generalized Functions II, IV (Academic, New York, 1967)

[GP55] Gell-Mann, M. and A. Pais, Phys. Rev. **97**, 1387 (1955)

[GOWR79] Ghirardi, G. C., C. Omero, T. Weber, and A. Rimini, Nuovo Cimento **A52**, 421(1979)

[GK56] Glaser, V., and G. Källen, Nucl. Phys. **2**, 706(1956).

[GMRS71] Gleeson, A. M., R. J. Moore, H. Rechenberg and E. C. G. Sudarshan, Phys. Rev.**D4**, 2242 (1971).

[He57] Heisenberg, W., Nucl. Phys. **4**, 532 (1957).

[Hö58] Höhler, G. Z. Phys. **152**, 546 (1958)

[Ho75] Howland, J. S., Journ of Math Analysis and Applications **50**, 415(1975)

[Hu48] Hu, N., Phys. Rev **74**,131(1948).

[IHBW90] Itano, W. M., D. J. Heinzen, J. J. Bollinger, and D. J. Wineland, Phys. Rev. **A41**,2295(1990)

[JS61] Jacob, R., and R. G. Sachs, Phys. Rev. **121**, 350 (1961).

[JW57] Jenkin F. A., and H. E. White, "Fundamentals of Optics", McGraw-Hill, 1957.

[KP38] Kapur P.L. and R. Peierls, Proc. R. Soc. London **A166**, 277 (1938).

[KS73] Kenny, B. G.,and Sachs, R. G., Phys. Rev. **D8**, 1605 (1973).

[Kh58] Khalfin, L., Soviet Physics JETP **6**, 1053 (1958).

[Kh68] Khalfin, L., JETP Lett. **8**, 65 (1968).

[Kh87] Khalfin, L., USSR Academy of Sciences, Steklov Mathematical Institute, Leningrad, LOMI Report E-6-87 and E-7-87, 1987 (unplublished)

[Kh90] Khalfin, L., University of Texas at Austin, CPT Report No. 211, 1990 (unpublished).

[KMS68] Kuriyan, J. G., N. Mukunda and E. C. G. Sudarshan, Comm. Math. Phys. **8**, 204(1968); J. Math. Phys. **9**, 12 (1068)

[L54] Lee, T. D., Phys. Rev. **95**, 1329 (1954)

[LOY57] Lee, T. D., R. Oehme and C. N. Yang, Phys. Rev. **106**, 340(1957).

[Le59] Levy, M., Nuovo Cimento **13**, 115 (1959).

[Li57] Livsic, M. S., Sov. Phys. Doklady **1**, 620 (1956); Soviet Physics JETP **4**, 91 (1957).

[Ma46] Ma, S. T., Phys. Rev. **69** 668 (1946); **71**, 195 (1947).

[Man54] Mandl, F., "Quantum Mechanics", Pergamon Press, New York (1954).

[MS58] Matthews, P. T., and A. Salam, Phys. Rev. **112**, 283 (1958).

[MS59] Matthews, P. T., and A. Salam, Phys. Rev. **115**, 1079 (1959).

[Me58] Mead, C., Phys. Rev. **116**, 359 (1958).

[MS72] Mehra J., and E. C. G. Sudarshan, Nuovo Cimento **11B**, 215 (1972)

[MS77] Misra, B., E. C. G. Sudarshan, J. Math. Phys. **18**, 756 (1977).

[MS90] Misra, B., and E. C. G. Sudarshan, Phys. Rev. **D42**, 3712 (1990).

[Mo51] Moshinsky, M., Phys. Rev. **84**, 525 (1951); see also H. M. Nussenzweig, "Moshinsky Functions, Resonances and Tunneling" in "Symmetries in Physics", Ed. A. Frank and B. Wolf (Springer-Verlag erlin, New York 1992) p. 294.

[Na58] Nakanishi, M., Progr. Theor. Phys. **19**, 607 (1958).

[Ne60] Newton, R. G., J. Math. Phys. **1**, 319 (1960).

[NGCB88] Norman, E. B. et. al., Phys. Rev. Letters **60**, 2246 (1988).

[PP55] Pais, A. and O. Piccioni, Phys. Rev. **100**, 1487 (1955).

[PW34] Paley, R., and N. Wiener, Fourier Transform in Complex Domain (Providence, R. I., 1934), Theorem XII.

[PGS80] Parravicini, G., V. Gorini and E. C. G. Sudarshan, J. Math. Phys. **21**, 2208(1980).

[Par84] Particle Data Group. Rev. Mod. Phys. **56**, S1 (1984).

[Pe54] Peierls, R. E., Proc. of Glasgow Conference, 1954.

[Pe60] Peierls, R. E., Proc Royal Society of London **253A**, 16(1960)

[Per80] Peres, A., Am J. Phys. **48**, 931 (1980)

[Pr80] Prigogine, I., "From Being to Becoming: Time & Complexity in Physical Sciences", W. H. Freeman & Co., San Francisco (1980).

[Ra63] Rau, J. Phys. Rev **129**,1880 (1963)

[RS55] Riesz, F., and B. Sz-Nagy, "Functional Analysis", Fredrich Ungar, New York (1955); see also M. Maimark, "Normed Rings", P. Noordhoff, Groningen (1959).

[Ro66] Roberts, J. F., J. Math. Phys. **7**, 1097(1966).

[RR85] Rosenblum, M., and J. Rovnyak, "Hardy Classes and Operator Theory", Oxford University Press, New York (1985).

[Sa63] Sachs, R. G., Ann. of Phys. **22**, 239 (1963).

[Sak85] Sakurai, J. J., "Modern Quantum Mechanics", Addison-Wesley, New York (1985).

[Se47] Segal, I. E. Ann. Math. **48**, 930 (1947).

[Si39] Siegert, A. J. F., Phys. Rev. **56**, 750(1939).

[Sim67] Simon, B., Comm. Pure and Appl. Math. **22**, 531 (1967).

[St75] Proc. Oxford coll. on Multiparticle Dynamics, 1975, p. 577.

[Su62] Sudarshan, E. C. G., in Relativistic Particle Interactions, Notes by V. Teplitz, Proceedings of the 1961 Brandeis University Summer Institute (Benjamin, New York, 1962).

Figure Captions

Fig. 2.1 The contour C in the complex λ plane. (Sec 2.2)

Fig. 2.2 The contours defining the integrals (2.36). (Sec 2.2)

Fig. 3.1 The contours C and C' in the complex λ plane. (Sec 3.2)

Fig. 3.2 Illustration of the deformation of contours C_1 and C_2 into the pole contributions plus the background contribution. (Sec 3.3)

Fig. 4.1 The z-plane contours defining vectors in $\mathcal{G}$ (Sec 4.3)

Fig. 4.2 Possible singularities encountered and the modified contours. (Sec 4.3)

Fig. 4.3 Contours $\Gamma, \Gamma', \tilde{\Gamma}$ for demonstrating completeness. (Sec 4.4)

Fig. 5.1 The contour Γ and the exposed pole at M_α. (Sec 5.1)

Fig. 5.2 Relationship between C_∞ and those counterclockwise contours enclosed by C_∞. (Sec 5.2)

Fig. 6.1 Spectra and Contours for the Cascade Model with $M_0 \gg \mu_0 \gg 0$. (Sec 6.4)

[SCG78] Sudarshan, E. C. G., C. B. Chiu, and V. Gorini, Phys. Rev. **D18**, 2914 (1978).

[Su81] Sudarshan, E. C. G., "Field Theory, Quantizations and Statistical Physics", edited by E. Terapegui, Reidel Publishing, Dodrecht, Holland (1981).

[Su91] Sudarshan, E. C. G. The structure of quantum dynamical semigroups, University of Texas Report No. DOE-ER 267, J. Math and Phys, IIT, Madras (in press).

[SC93] Sudarshan,E. C. G., and C. B. Chiu, Phys. Rev. **D47**, 2602 (1993)

[TPP91] Tasaki, S. T., Petrosky and I. Prigogine, Physica **A173**, 175 (1991); See also Petrosky and I. Prigogine, Proc. of National Academy of Science (US), 1993.

[Ti37] Titchmarsh, E. C., Theory of Fourier integrals, Oxford University Press 1937.

[Va80] Valanju, P., C., Ph. D. Dissertation, University of Texas, 1980.

[VCS80] Valanju, P., C., B. Chiu and E. C. G. Sudarshan, Phys. Rev. **D21**, 1304 (1980).

[vK53] van Kampen, N., Phys. Rev. **91**, 1267 (1953)

[vN32] von Neumann, J., "Mathematical Foundation of Quantum Mechanics", Springer Verlag, Berlin (1932) Princeton University Press (1955)

[WW30] Weisskopf, V. F. and E. P. Wigner, Z. Phys. **63**, 54 (1930)

[Wh37] Wheeler, J., Phys. Rev. **52**, 1107(1937).

[WvN29] Wigner, E. P., and J. von Neumann, Z. Phyusik **30**, 465(1929).

[Win61] Winter, R. G., Phys. Rev. **123**, 1503 (1961).

[Wi58] Williams, D. N., Commun Math. Phys.**21**, 314 (1971).

[WY64] Wu, T. T., and C. N. Yang, Phys. Rev. Lett. **13**, 380 (1964).

[WO62] Wu T. Y. and T. Ohmura, "Quantum Theory of Scattering", Prentice Hall, Englewoord Cliffs (1962).

[Ya54] Yamaguchi, Y., Phys. Rev. **95**, 1628 (1954); see also Progr. Theor. Phys.Suppl.**7**, 1 (1958).

[Ya88] Yamaguchi, Y., J. Phys. Soc. Jpn. **57**, 1525 (1988); **57**, 3339(1988); **58**, 4375(1989); **60**, 1545(1991)

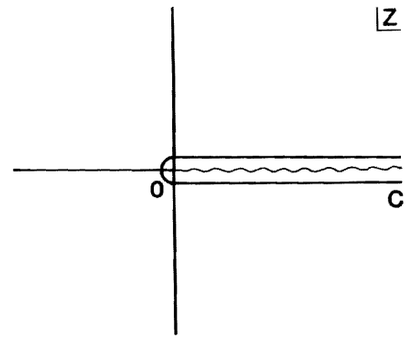

Fig. 2.1

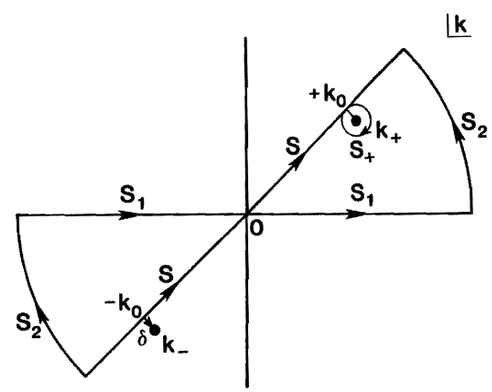

Fig. 2.2

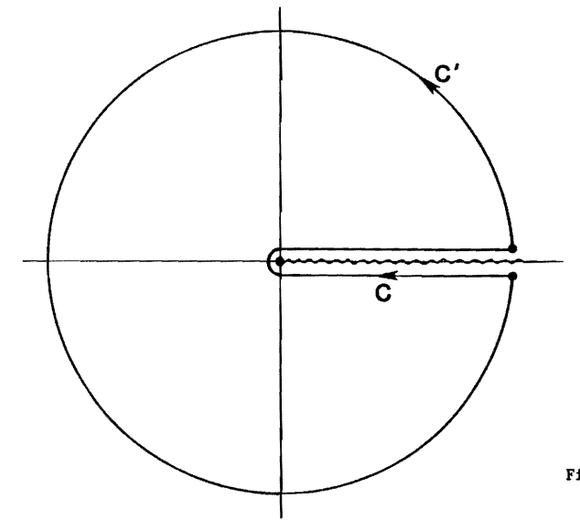

Fig. 3.1

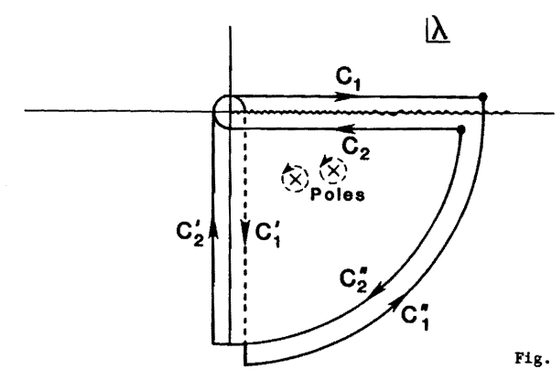

Fig. 3.2

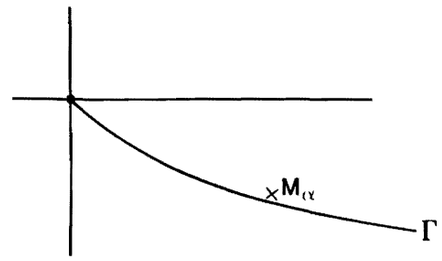

Fig. 5.2

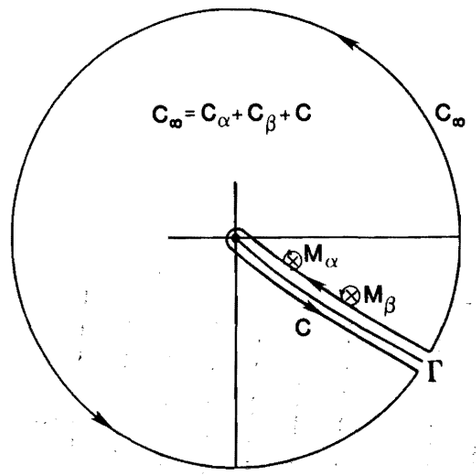

Fig. 5.2

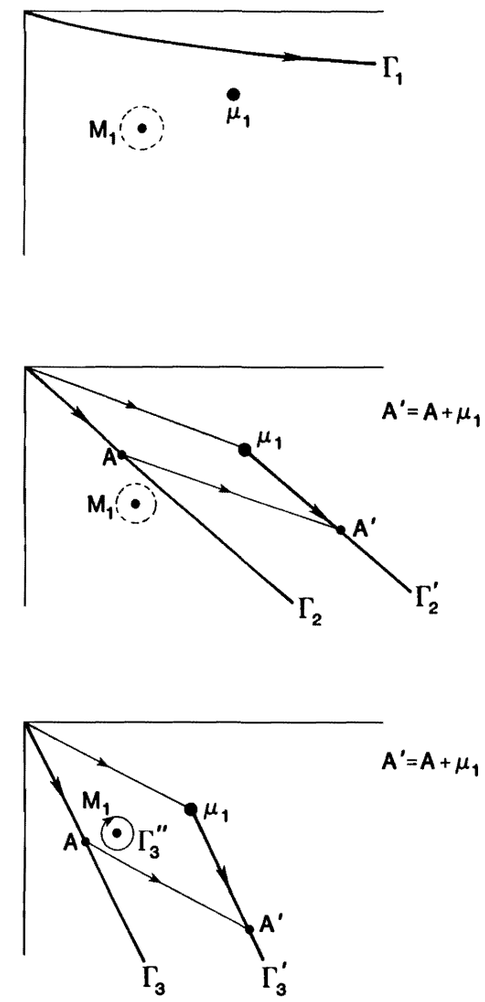

Fig. 6.1