CEA/SACLAY
DSM

SERVICE TECHNIQUE DE CRYOGÉNIE ET DE MAGNÉTISME

6

DAPNIA-STCM-98-11

FERMILAB
MAR 16 1999
LIBRARY

Fermilab Library
0 1160 0068556 4

DAPNIA/STCM 98-11 September 1998

STATUS REPORT ON THE CMS SUPERCONDUCTING SOLENOID FOR LHC

F. Kircher, B. Levesy, Y. Pabot et al.

DAPNIA

Talk given at the Applied Superconductivity Conference (ASC'98), Palm Desert, California (U.S.A.), September 13-18, 1998

Département d'Astrophysique, de Physique des Particules, de Physique Nucléaire et de l'Instrumentation Associée
CEA/Saclay F-91191 Gif-sur-Yvette Cédex

Couverture : Sylvie Cabrit et Marc Sauvage

COMMISSARIAT A L'ENERGIE ATOMIQUE

DSM/DAPNIA/STCM

Rapport n° 11
le 15 septembre 1998

F. KIRCHER

STATUS REPORT ON THE CMS SUPERCONDUCTING SOLENOID FOR LHC

ASC' 98 Palm Desert - California
13/09/1998 au 18/09/1998

Status Report on the CMS Superconducting Solenoid for LHC

F. KIRCHER, B. LEVESY, Y. PABOT
Commissariat à l'Energie Atomique, Saclay, DSM/DAPNIA, France
D. CAMPI, B. CURÉ, A. HERVÉ
CERN, Geneva, Switzerland
I. HORVATH
ETH Zürich, Switzerland
P. FABBRICATORE, R. MUSENICH
INFN Geneva, Italy

Abstract **- The CMS (Compact Muon Solenoid) experiment is one of the two large experiments approved to be installed on the Large Hadron Collider at CERN, and is now at an early stage of construction. For good momentum resolution, a superconducting solenoid is needed, the main characteristic of which is a nominal magnetic field of 4 T in a 5.9 m diameter and 12.5 m long warm bore, leading to a stored energy of 2.7 GJ. These characteristics make this superconducting solenoid the largest and most powerful one ever designed. The main technical choices are : the use of a mechanically reinforced Al-stabilized conductor, the subdivision of the coil in five modules, each internally wound and vacuum impregnated before final assembly, the use of indirect cooling with circulation of liquid helium in a thermosiphon mode and quench back protection process to enhance the energy dump. All these choices need developments which will be reported together with the detailed description and the status of each main component of the cold mass of the solenoid.**

I. Introduction

The primary aim of the Compact Muon Solenoid Collaboration is to discover new physics underlying the breakdown of electroweak symmetry. For reaching this goal, CMS, a compact and powerful spectrometer well matched to the physics potential of the high luminosity collider LHC, has been designed.

The single most important aspect of the detector design is the configuration and parameters of the magnetic field for the measurement of muon momenta. Both toroidal and solenoidal fields have been considered. A solenoid has been opted for because, for a similar bending power, the overall size of a solenoidal system is smaller than for a toroid ; also, the strong bending in the transverse plane facilitates the task of triggers, based on tracks pointing back to the vertex.

A 12.5 m long superconducting solenoid has been chosen, with a free inner diameter of 5.9 m and a uniform central magnetic field of 4 T. The muon spectrometer then consists of a single magnet, particularly suitable for a simple detector architecture [1]. The dimensional ratio (length/radius) of the solenoid and the high magnetic field allow an efficient muon detection and a good momentum resolution. The inner coil radius is large enough to accommodate the inner tracker and the calorimeters. The magnetic flux is returned via a 1.5 m thick iron yoke instrumented with muon chambers ; this yoke is thick enough to allow safe identification and powerful trigger on muons. A three dimensional view of the CMS detector is shown on Fig 1.

Obviously, the characteristics of the CMS solenoid are far beyond what has been achieved up to now in large existing superconducting solenoids, such as ALEPH [2] and DELPHI [3], which produce a 1.5 T magnetic field in a useful volume 7 m long x 5 m in diameter. So, even if the main basic concepts of these solenoids, such as high purity aluminium conductor stabilization, inner winding technique, coil epoxy impregnation and indirect cooling, have been retained for CMS, a simple extrapolation cannot be made from previous realisations ; this is mainly due to the large increase in the magnetic field and the ensuing parameters such as forces and stored energy. The CMS detector magnet is actually a new step in the development of detector magnets.

The aim of this paper is to present how the stringent characteristics of the CMS solenoid are expected to be reached, as far as the design and the associated industrial developments which are going on are concerned.

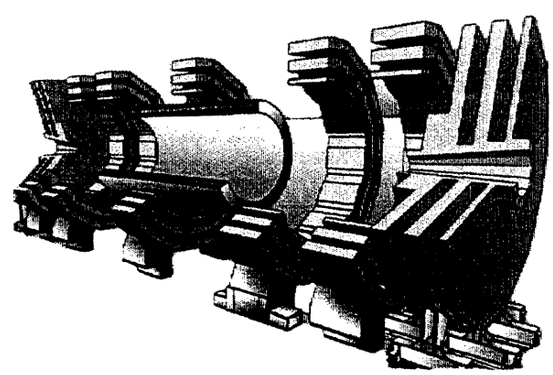

Fig. 1. Three dimensional view of the CMS detector.

Manuscript received September 14, 1998.

II. Cold Mass Characteristics

The CMS cold mass is defined as the part of the magnet which is at helium temperature. It consists of the five modules of the superconducting winding, mechanically and electrically connected ; the outer part of these modules (a 50 mm thick Al alloy shell) will be used as an outer winding mandrel then as a mechanical reinforcement structure, but also as a cooling wall and quench back tube during the cool-down, energization and fast discharge of the coil. The cold mass total weight is about 225 t. It is supported inside the vacuum tank through a system of radial and longitudinal tie-bars supports.

Each module is wound with four layers of conductor. The conductor, described in more details in chapter III, is a cable inserted by co-extrusion inside a very high purity aluminium profile and reinforced by two sections of aluminium alloy welded using electron beams.

After winding, each module will be vacuum epoxy impregnated and a pre-assembly control between two adjacent modules will be done at the winding site. The modules will be then sent to CERN for final assembly of the cold mass in vertical position, then swiveling in the horizontal position before insertion into the vacuum tank.

A. Geometrical Parameters

The cold mass geometrical parameters, defined according to the detector requirements, are given in Table I.

TABLE I
Cold Mass Main Dimensions (At 300 K)

Magnetic length	12.500 m
Internal diameter	6.320 m
External diameter	6.944 m
Winding thickness	262 mm
Support cylinder thickness	50 mm
Total mass	225 t

B. Magnetic parameters

The main magnetic parameters of the CMS magnet are listed in Table II.

TABLE II
Cms Magnet Parameters

Central magnetic induction	4.0 T
Maximum field on conductor	4.6 T
Total ampere-turns	42.51 MAt
Stored energy	2.67 GJ
Winding overall current density	12.98 A/mm^2

C. Quench Protection

At its nominal values, the CMS has a larger stored energy per unit mass of coil (~ 12 kJ/kg) than any large superconducting magnet ever built.

If the whole stored energy is homogeneously dissipated inside the winding, this would heat the coil up to 90 K. To reduce this temperature, the CMS protection scheme uses a dual system of external dump resistor and quench back process through the support structure within a few seconds after the fast current decay is started. For the electrical parameters given in Table III, the maximum temperature in the coil is about 60 K, assuming a normal extraction of the stored energy in the dump resistance. In case of a failure of the active protection system, the quench back is triggered only 80 sec after the quench has started and in this case, the maximum temperature in the coil would be around 145 K. Of course, the systems putting the dump resistance into circuit will be doubled to avoid such kind of failure.

TABLE III
Cms Solenoid Electrical Parameters

Operating current	19 500 A
Self-inductance	14.05 H
Dump resistance	0.05 Ω
Dump voltage to ground	± 500 V

III. Cms Conductor

The CMS conductor must fulfill the general condition of stability and protection needed for any large superconducting magnet, but, due to the large forces, it also incorporates a local mechanical reinforcement. As shown on Fig 2, the conductor is thus made of three parts, which are strongly assembled together during the fabrication process : a 32 strand superconducting cable is co-extruded inside a high purity aluminium matrix to form what is called the insert ; two aluminium alloy sections are then welded on each side of the insert using continuous electron beam technique to give the mechanical reinforcement to the conductor structure. The conductor parameters are given in Table IV.

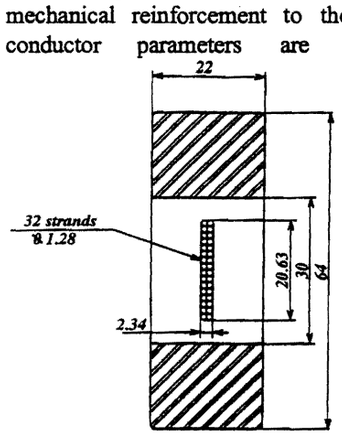

Fig 2. CMS conductor cross section (in mm)

TABLE IV
CONDUCTOR CHARACTERISTICS

Nominal current	19 500 A
Critical current (5 T, 4.2 K)	55 600 A
Number of strands	32
Strand diameter	1.28 mm
Strand Cu/SC ratio	1.1
Cable dimensions	20.63 x 2.34 mm^2
Insert material	Al 99.998
RRR Al at 0 T, annealed	≥ 1500
Insert dimensions	30 x 22 mm^2
Reinforcement material	Al 6082 T5
Conductor dimensions	64 x 22 mm^2

IV. WINDING DESIGN

A. Modular versus Monolithic Winding

Both solutions of a modular [4] and a monolithic winding [5, 6] were extensively studied during the Preliminary Design Phase of the project.

The monolithic solution was recognized as being the best one if the coil is perfectly realized: the outer winding technique is easier to put into operation and the absence of intermediate flanges makes the coil a very homogeneous structure. The technical drawbacks of this solution are the production of very long conductor unit lengths, a huge winding machine and the difficult task of coping with a very large monolithic winding for polymerization and assembly.

The advantages of the modular solution are mainly the drawbacks of the monolithic solution and vice versa. The main drawbacks of the modular solution are the necessity to use an inner winding technique and the presence of intermediate flanges. On the other hand, unit lengths of conductor are limited and all the electrical junctions can be made outside the high magnetic field region. This solution has also some advantages from the planning point of view.

Taking the pros and the cons into account, it has been considered that the monolithic solution was an ambitious but risky challenge from the construction point of view. The modular solution is more risky from a running point of view, but the main risks have been identified and analytical and technical solutions have been found to minimize them. Consequently, a solution with 5 modules, each 2.5 m long, was retained, as the best compromise for the project.

B. Inner Winding Technique

The inner winding technique has already been used for several superconducting magnets, but mainly for one layer windings, and only in few cases for two layer windings. The difficulties for CMS are due to the stiffness of the reinforced conductor and the necessity to stack the four layers of conductor before fixing them firmly by impregnation.

The method which is foreseen consists of two steps: forming of a free layer by bending, then transfer of the formed layer into the external cylinder . This method will be tested on a short model coil, then on a prototype module before the winding of the final modules.

C. Mechanical Stability

A cross section of the winding in the flange area, with its surroundings, is shown on Fig 3. Maximum values of Von Mises (VM) and shear (Sh) stresses in different parts of the winding components and interfaces are given in Table V.

TABLE V
MAXIMUM STRESS IN THE COIL

Location	Max stress (MPa)
SC cable (VM)	163
Pure Aluminium (VM)	21
Al Alloy reinforcement (VM)	142
Outer cylinder (VM)	137
Interface cable/pure Al (Sh)	11
Interface pure Al/Al alloy (Sh)	9
Interface insulation/cond. (Sh)	10

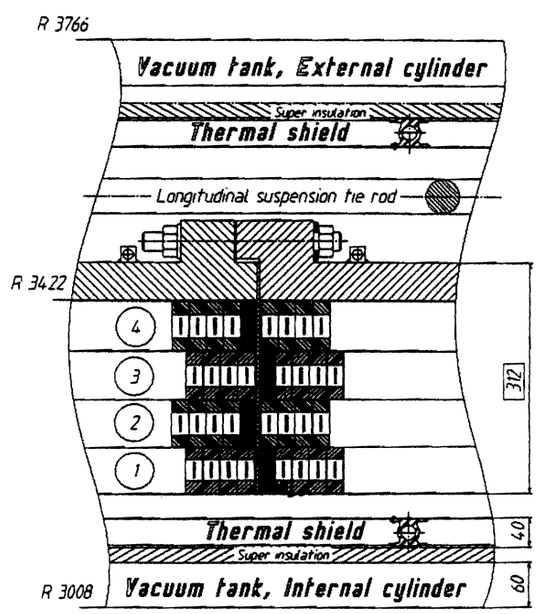

Fig 3. CMS solenoid cross section (in mm)

D. Thermal Stability

Due to the indirect cooling mode, the CMS solenoid is far from being cryostable. Thermal stability studies are therefore needed. Calculations done with different codes [7] showed that the Minimum Quench Energy for the nominal conditions (4 T central field and 4.5 K operating temperature) is in the range 0.4 to 1 J, depending on the way the current sharing is introduced. The Minimum Propagating Zone develops in about 10 ms; as a consequence of the alloy reinforcement and of the insulation around the conductor, the transverse heat conduction to adjacent conductors does not significantly contribute to the stability margin of the coil.

V. Cooling Circuit

The CMS coil is indirectly cooled with saturated liquid helium at 4.5K through a network of tubes welded to the external mandrel and supplied with helium in a thermosiphon circulating mode. This process is well adapted to the indirect cooling mode and is intrinsically reliable; it only requires a proper sizing of the tubing. Practically, the cooling tubes will be circumferencially welded on the outer part of the modules with a space of 250 mm between each tube and connected to the feeding and returning manifolds installed at the top and bottom of the coil.

VI. Pre-industrialisation

A pre-industrialisation program concerning mainly the conductor and winding developments, was started in 1997 to industrially validate the outlined solutions.

A. Conductor Pre-industrialisation

Significant lengths of strand with the requested electrical characteristics were industrially produced; the cabling of low Cu/SC strands was proved feasible, with a degradation of the critical current after cabling not exceeding few %.

Several extrusion tests were performed and up to 100 m insert lengths were produced. It was shown that this process has little effect on the critical current and that pull out tests give a shear stress equivalent to up to 40 MPa in the bonding between the SC cable and the very pure aluminium. However, more tests are still needed to fix all the parameters of this complex operation.

The reinforcement of a superconductor by joining aluminium alloy strips to the insert is a novel method. An electron beam welding technique has been chosen, being the one which provides a minimum heat input on the conductor, with a very good control of the heating source [8]. First tests were carried on at CERN on short samples to prove the feasibility of the process to the CMS conductor and to adapt it to the specific materials: adequate preparation of the material before welding and welding process parameters were determined. The present step is the production of 6 m long lengths in static conditions by several manufacturers. More developments in dynamic conditions will be performed as part of the main contract before the production of the 20 lengths of conductor, each 2.55 km long, needed for the solenoid.

As conductor joints will be needed for layer to layer and module to module connection, and eventually in case of repair, studies have also been started in this field [9]. A resistance in the range 1.E -10 to 1.E-9 Ω is expected for a 500 mm joint in low magnetic field, depending of the kind of welding. Calculation and experimental results turned out to be in agreement.

B. Winding Pre-industrialisation

Preliminary tests for winding pre-industrialisation mainly consisted of: a) bending and stacking tests on dummy and pre-prototype conductors, b) designing of a prototype winding line to be used to wind a model coil with the nominal diameter and cross section, but a shorter length (~ 0.25 m), c) studying of influence of the conductor surface state on the impregnation mechanical characteristics.

VII. Conclusions

The general study phase of the CMS solenoid is now completed. All major options of the design have been determined and pre-industrialisation tasks have been launched. The project is now in its detailed study and engineering phases. All the main technical specifications for the conductor and the winding are scheduled to be ready by the first quarter of 1999. First test of the completed solenoid at the surface level at CERN is foreseen in 2003.

Acknowledgment

The authors would like to thank all their colleagues from laboratories and industries who have been involved in this work, as well as the CMS Collaboration.

References

[1] The Compact Muon Solenoidal Technical Proposal, CERN/LHC 94-38, (1994).

[2] J.M. Baze et al., Design, Construction and Tests of the Large Superconducting Solenoid Aleph, IEEE Trans. Mag., 1988, **2**, 1260-1263.

[31 R. Apsey et al., Design of a 5.5 metre Diameter Superconducting Solenoid for the DELPHI Particle Physics Experiment at LEP, IEEE Trans. Mag., 1984, **2**, 490-493.

[4] J.C. Lottin, H. Desportes, C. Lesmond, C. Lyraud, C. Pes, A. Hervé, Conceptual Design of the CMS 4 Tesla Solenoid, Adv. in Cryogenic Eng., 1996, **41**, 819- 825.

[5] CMS, The Magnet Project, Technical Design Report, CERN/LHCC 97-10, (1997).

[6] J. C. Lottin et al., CMS Solenoid Cold Mass Design, to be published in MT15 Proceedings (1998).

[7] F.P. Juster, P. Fabbricatore, Thermal Stability of Large Al-stabilized Superconducting Magnet. Theoretical Analysis of CMS Solenoid, submitted to ICEC 17 (1998).

[8] F. Bertinelli, D. Fritz, I. L. Horvath, J. Neuenschwander, S. Sgobba, T. Tardy, F. Wittgenstein, Manufacture of Aluminium Stabilized and Reinforced Superconductors by Using the Electron Beam Welding Technique, to be published as paper PD-58 in MT15 Proceedings (1998).

[9] P. Fabbricatore, S. Farinon, R. Musenich, C. Priano, B. Curé, I. Horvath, Developments of Electrical Joints for Aluminium Stabilized Superconducting Cables, submitted to this conference.