CEA/SACLAY
DSM

SERVICE TECHNIQUE DE CRYOGÉNIE ET DE MAGNÉTISME

DAPNIA-STCM-00-07

FERMILAB
JUN 29 2000
LIBRARY

Fermilab Library
0 1160 0091438 5

DAPNIA/STCM-00-07 May 2000

SUPERCONDUCTING MAGNETS FOR FUTURE PARTICLE ACCELERATORS

A. Devred

DAPNIA

Présenté aux « Sixièmes Journées d'Aussois (France) », 16-19 mai 2000

Département d'Astrophysique, de Physique des Particules, de Physique Nucléaire et de l'Instrumentation Associée
CEA/Saclay F-91191 Gif-sur-Yvette Cédex

Couverture : Sylvie Cabrit et Marc Souvage

Superconducting Magnets for Future Particle Accelerators

Arnaud Devred
CEA-DSM-DAPNIA-STCM

Sixièmes Journées d'Aussois
17 mai 2000

Contents

- Magnet Types
- Brief History and State of the Art
- Review of R&D Programs
  - LHC Upgrade
  - VLHC
  - TESLA
- Muon Collider
- Conclusion

Magnet Classification

- **Four types of superconducting magnet systems are presently found in large particle accelerators**
  - **Bending and focusing magnets**
    (arcs of circular accelerators)
  - **Insertion and final focusing magnets**
    (to control beam optics near targets or collision points)
  - **Corrector magnets**
    (*e.g.*, to correct field distortions produced by persistent magnetization currents in arc magnets)
  - **Detector magnets**
    (embedded in detector arrays surrounding targets or collision points)

Bending and Focusing Magnets

- **Bending and focusing magnets are distributed in a regular lattice of cells around the arcs of large circular accelerators**

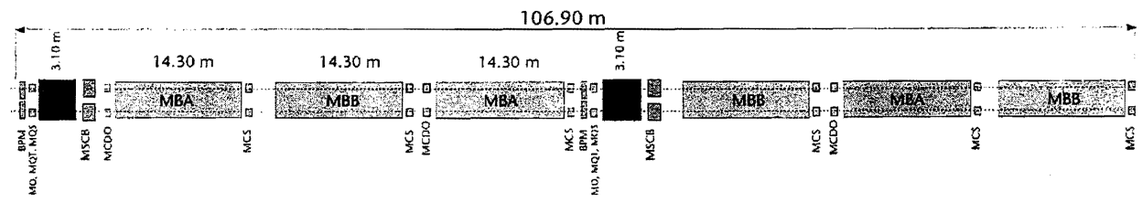

MQ:	Lattice Quadrupole	MBA:	Dipole magnet Type A
MO:	Landau Octupole	MBB:	Dipole magnet Type B
MQT:	Tuning Quadrupole	MCS:	Local Sextupole corrector
MQS:	Skew Quadrupole	MCDO:	Local combined decapole and octupole corrector
MSCB:	Combined Lattice Sextupole (MS) or skew sextupole (MSS) and Orbit Corrector (MCB)		
BPM:	Beam position monitor		

Cell of the proposed magnet lattice for the LHC arcs (LHC counts 8 arcs made up of 23 such cells)

Bending and Focusing Magnets (Cont.)

- These magnets are in large number (*e.g.*, 1232 dipole magnets and 386 quadrupole magnets in LHC),
- They must be mass-produced in industry,
- They are the most expensive components of the machine.

$\Longrightarrow$ any new circular machine beyond LHC will require significant value-engineering efforts to improve magnet performance and limit costs

Insertion and Final Focusing Magnets

- Circular and linear accelerators usually require sets of special magnets to transport and strongly focus the beam(s) near the target or collision points

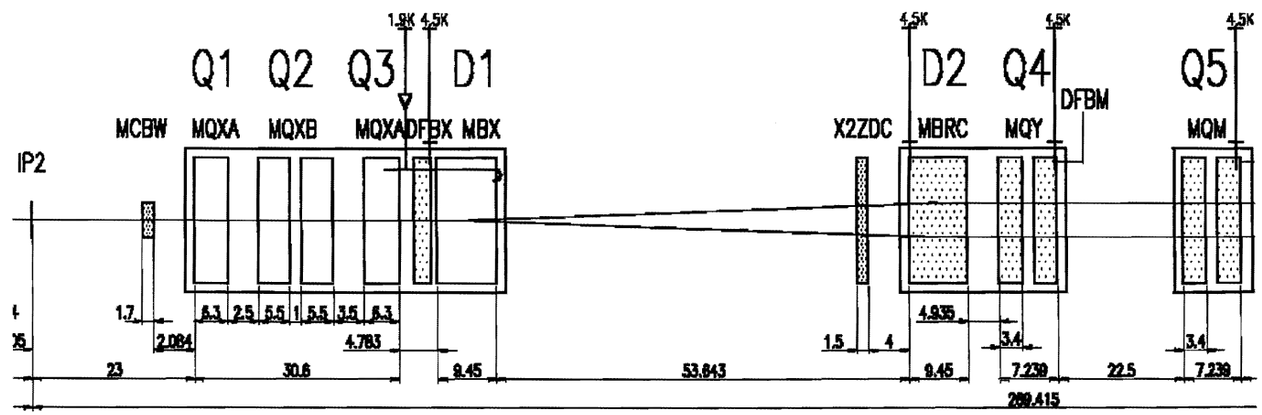

Proposed magnet lattice for the right-hand side of the #2 interaction point of LHC

Insertion and Final Focusing Magnets (Cont.)

- These magnets are in limited number
- They must be customized to their crowded environment
- The requirements for the final focusing quadrupole magnets can be very stringent (high field gradient in large aperture, good field quality, and/or high heat load from beam losses)

$\Rightarrow$ can be used as a test bench for more innovative designs

Contents

- Magnet Types
- Brief History and State of the Art
- Review of R&D Programs
  - LHC Upgrade
  - VLHC
  - TESLA
- Muon Collider
- Conclusion

Magnet Design

- Most dipole and quadrupole magnets built up to now (Tevatron, HERA, SSC, LHC...) rely on similar design concepts
- These concepts were pioneered in the late 70's for the Tevatron at Fermilab
- Improvements in superconductor and magnet fabrication have led to more than double the field over the last 20 years

Magnetic Design

- **Field is produced by saddle-shape coils, which, in their long straight sections approximate cosθ or cos2θ conductor distributions**

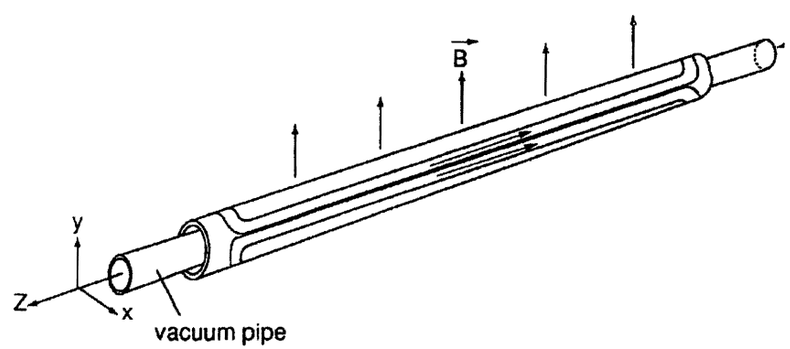

Saddle-shape coil assembly for a dipole magnet

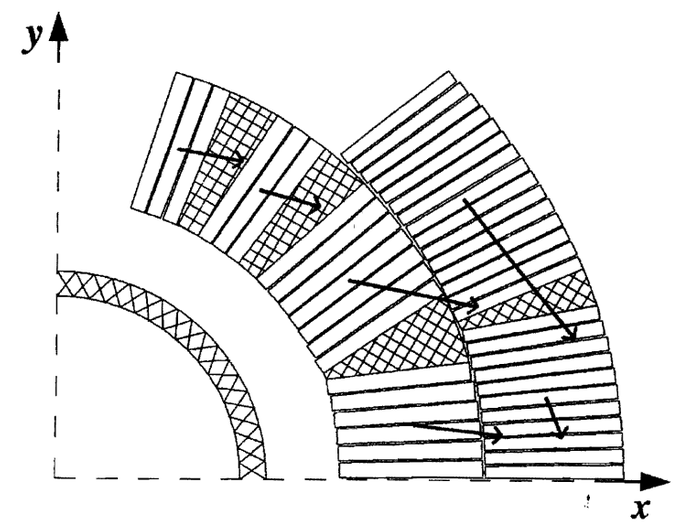

Cosθ conductor distribution in a dipole coil assembly quadrant (Courtesy R. Gupta)

Rutherford-Type Cable

- Coils are wound from flat, two-layer Rutherford-type cable, made up of NbTi multifilamentary composite strands

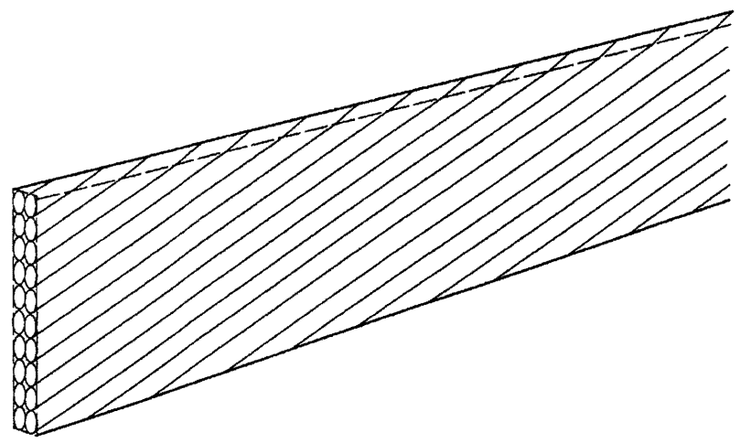

Rutherford-type cable
(Courtesy T. Ogitsu)

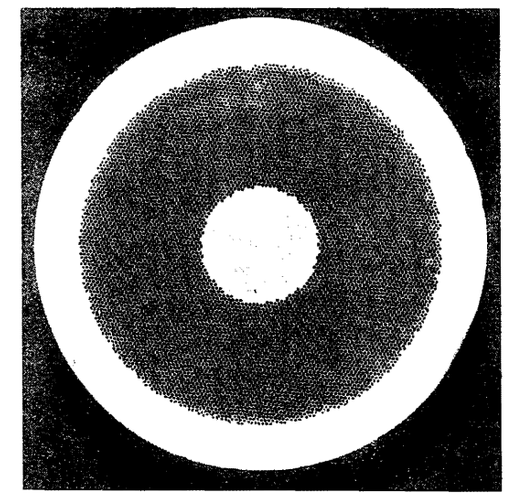

NbTi strand for accelerator magnet application
(Courtesy Alstom/MSA/Fil)

Mechanical Design

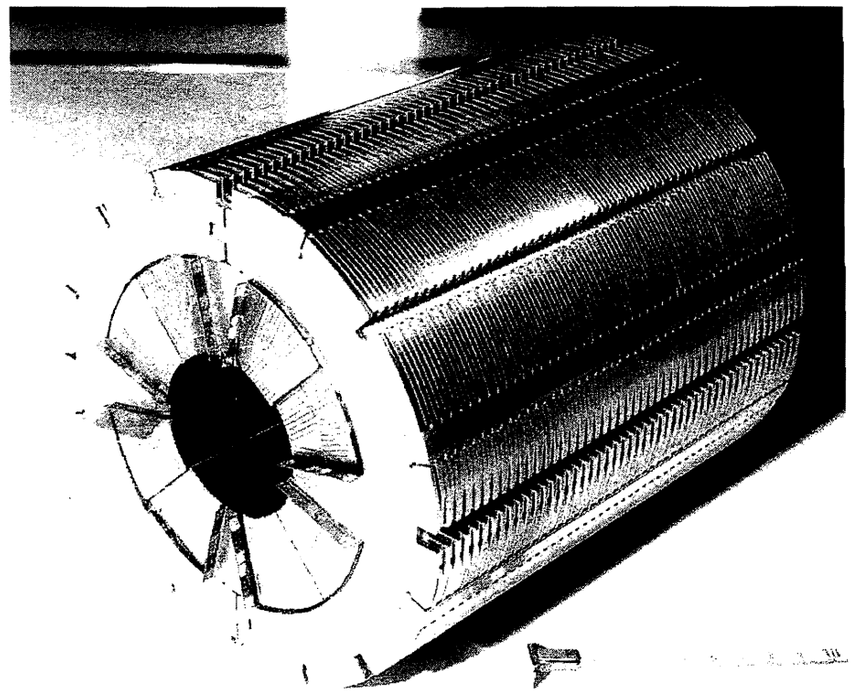

Collared-coil assembly section of LHC arc quadrupole magnet developed at CEA/Saclay

- Coils are restrained mechanically by means of laminated collars, locked together by keys or tie rods

Iron Yoke

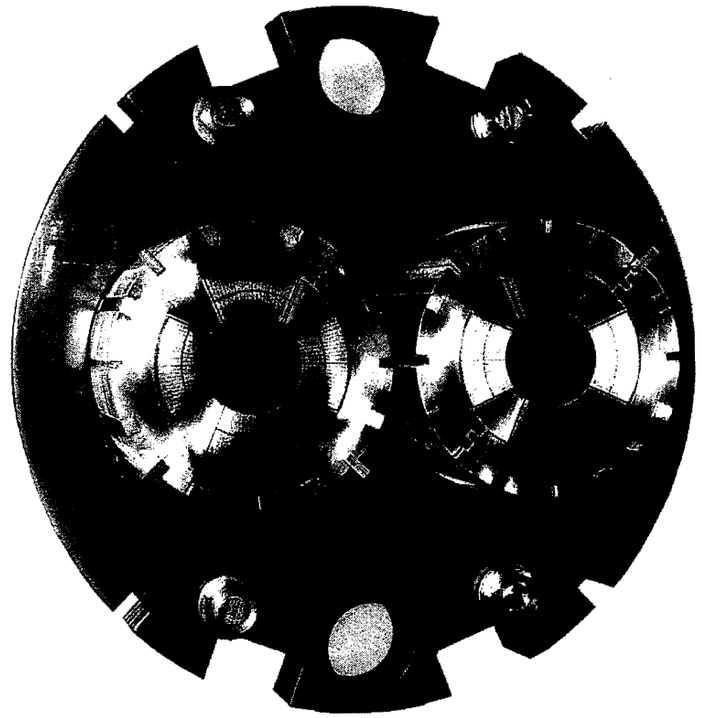

Twin-aperture, LHC arc quadrupole magnet design developed at CEA/Saclay

- Collared-coil(s) is(are) surrounded by an iron yoke providing a return path for the magnetic flux
- In some designs, the yoke contributes to the mechanical support

Tevatron

- **The Tevatron dipole magnets rely on a warm iron yoke and are operated reliably since 1983 at a field of 4 T**

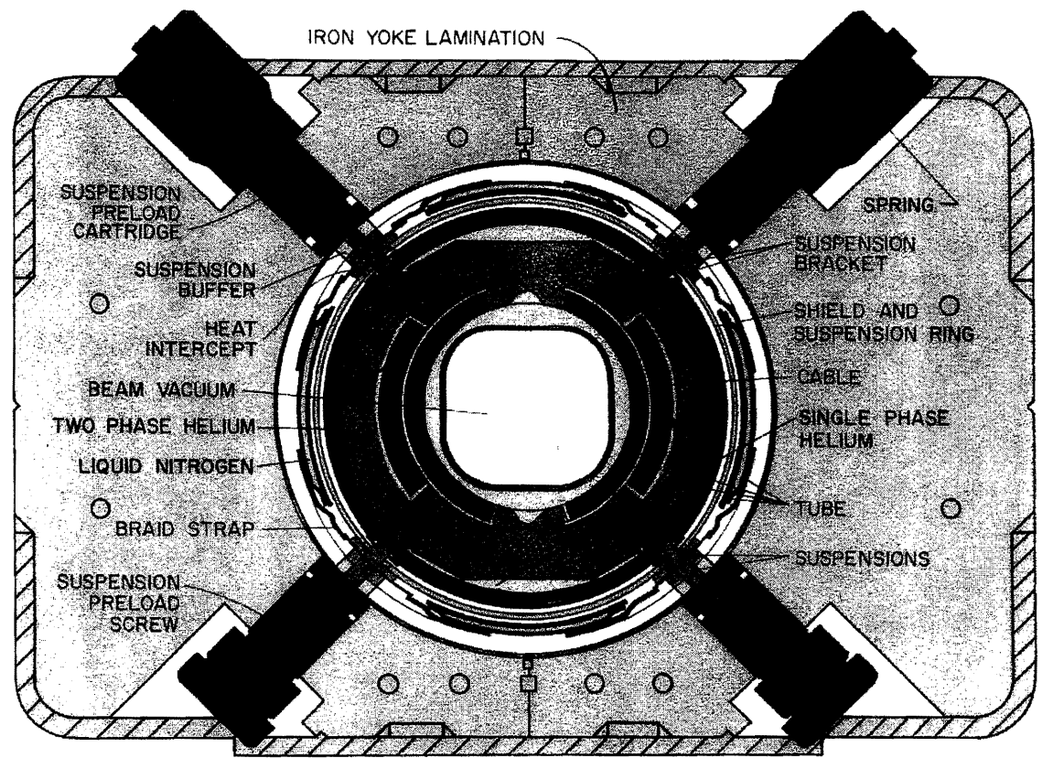

HERA

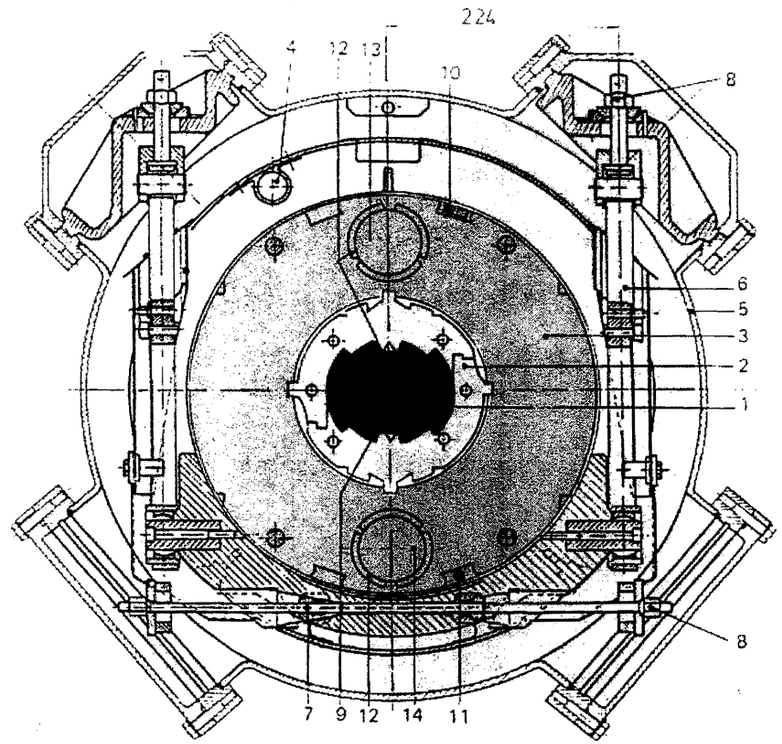

- **Starting with HERA, the iron yoke is included in the cold mass**
- **HERA was commissioned in 1990 and the dipole magnets are operated at 4.7 T**

SSC

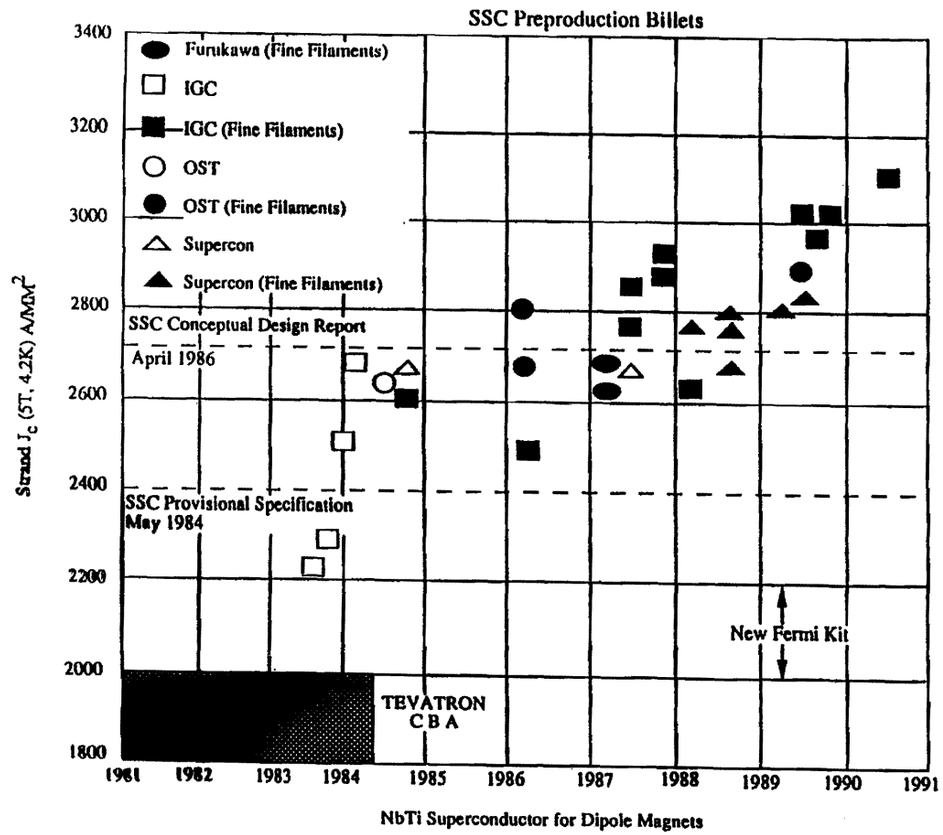

- **The SSC magnet R&D program has allowed significant improvements in the performances and production costs of NbTi wires**

LHC

- **LHC will rely on twin aperture magnets operated in superfluid helium**

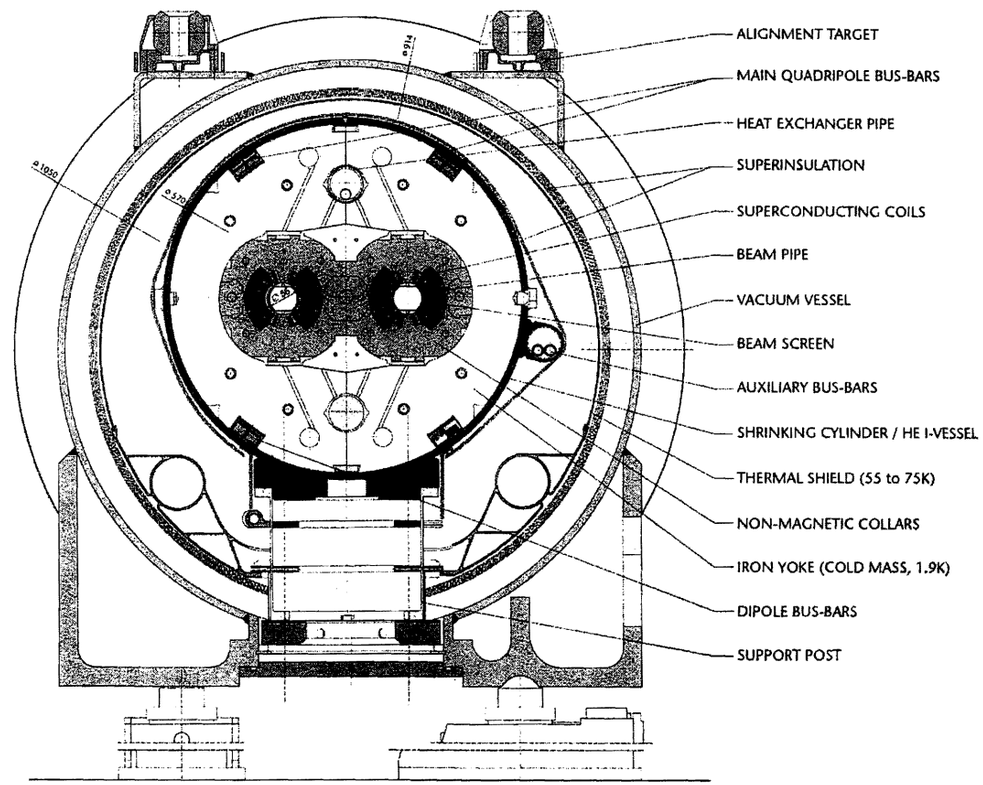

LHC (Cont.)

- **The LHC magnet R&D program shows that the limit of NbTi at 1.9 K could be between 9 and 10 T**

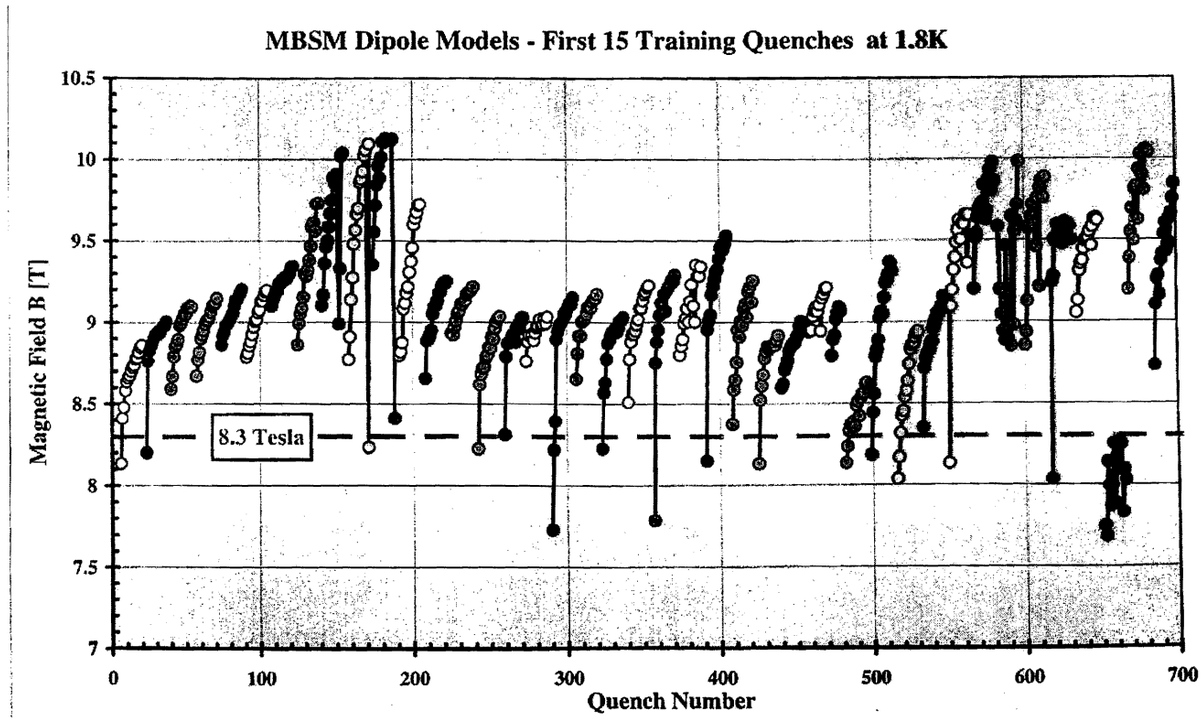

(Courtesy A. Siemko)

State of the Art in NbTi Magnets

- **The most successful NbTi dipole magnet model was built at CERN (in collaboration with Helsinki University) and reached a maximum field of 10.53 T at 1.77 K**

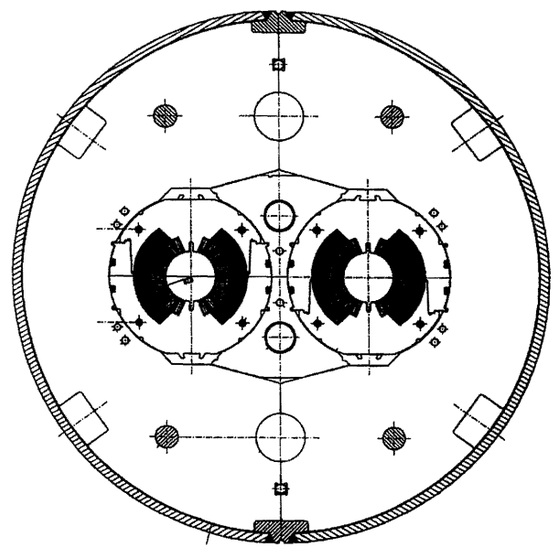

(Courtesy D. Leroy)

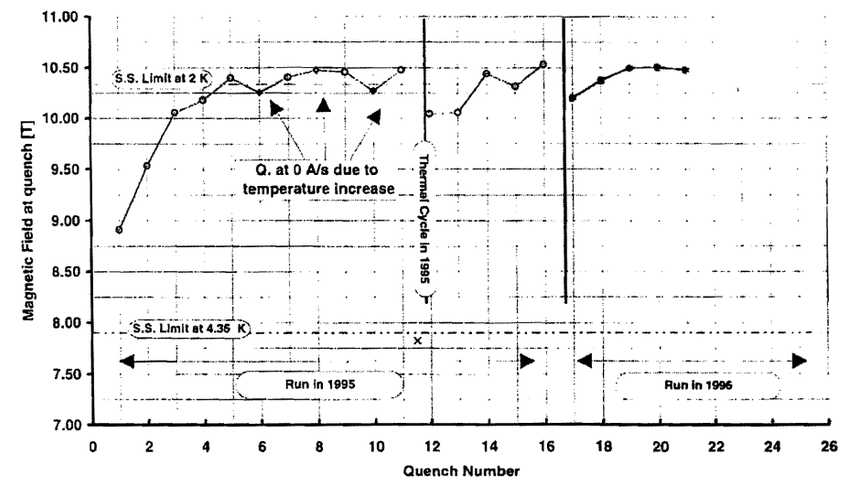

(Courtesy A. Siemko)

State of the Art in Nb_3Sn Magnets

- At the beginning of the 90's, Twente University (in the Netherlands) and LBNL (in the USA) have carried out R&D programs aimed at building Nb_3Sn dipole magnet models
- Both magnets were single aperture (50 mm) and relied on design concepts similar to those previously described
- Both models were assembled according to the "wind, react & impregnate" technique and were quite successful

Program at Twente University

- The Twente University dipole magnet model was tested at CERN in the Summer of 1995

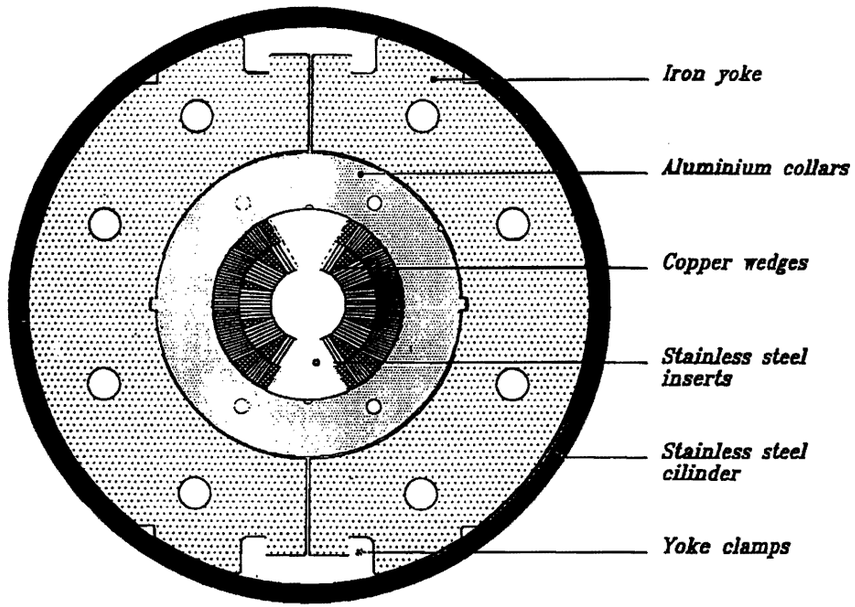

- It reached 11.03 T on its first quench at 4.4 K

(Courtesy H.H.J. ten Kate)

Program at LBNL

- **The LBNL dipole magnet model was tested in 1997 and after ~40 quenches at 4.2 K and 1.8 K reached a record field of 13.5 T at 1.8 K**

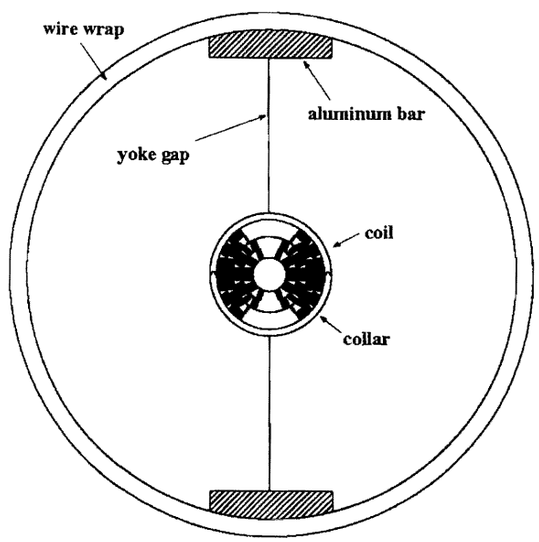

(Courtesy S. Caspi)

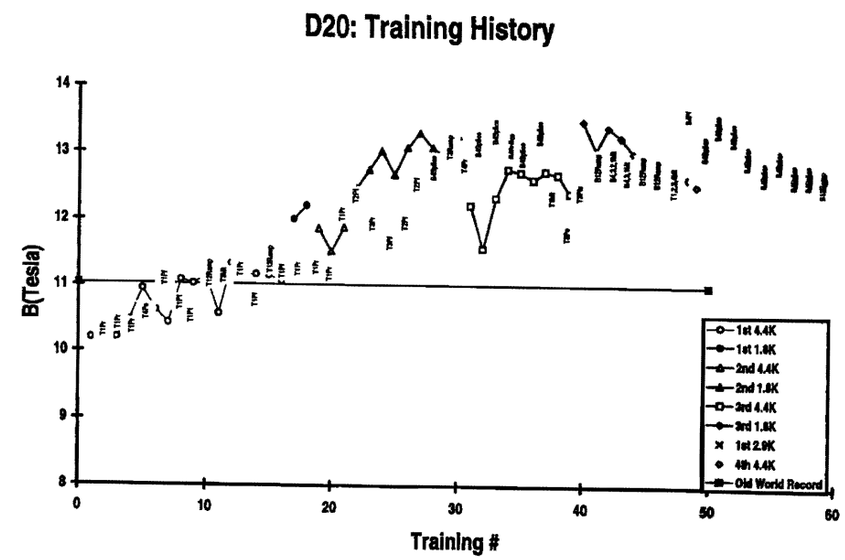

(Courtesy A. McInturf)

Contents

- Magnet Types
- Brief History and State of the Art
- Review of R&D Programs
  - LHC Upgrade
  - VLHC
  - TESLA
- Muon Collider
- Conclusion

Program for LHC Upgrade at INFN Milan (LASA)

- In the mid-1990's, INFN Milan (LASA) has investigated various designs of large-aperture, high-field-gradient quadrupole magnets for a possible upgrade of the LHC final focusing quadrupole magnets
- and has collaborated with Europa Metalli to develop high-J_C Nb_3Sn wires
- The program was put on hold because of lack of funding

Program for LHC Upgrade at INFN Milan (Cont.)

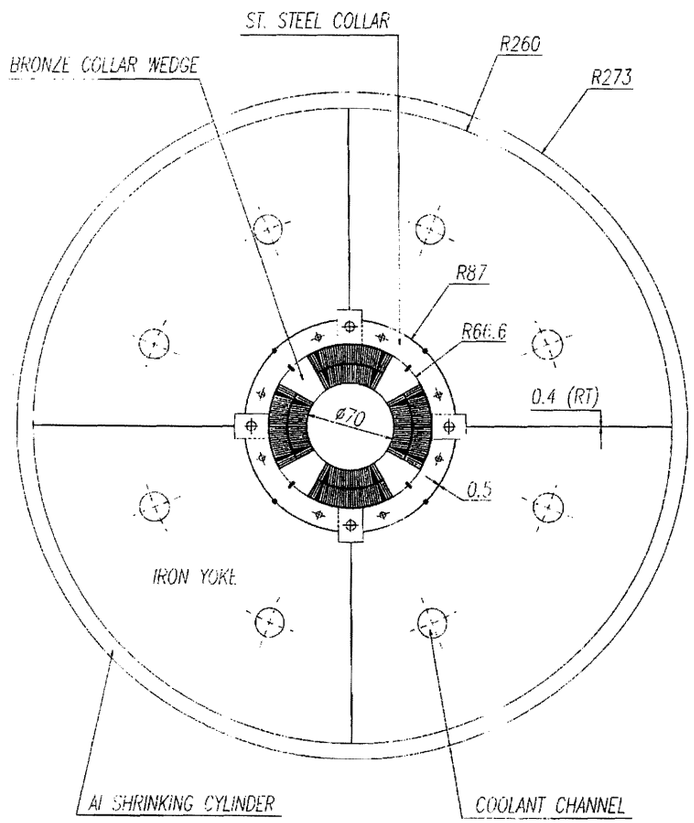

(G. Ambrosio, 1996)

- Example of conceptual design for a 70-mm-aperture, 300 T/m quadrupole magnet
- The operating current is 17.9 kA and the peakfield is 11.5 T
- It requires a high-performance Nb_3Sn wire, with a J_C(non-Cu) of 1800 A/mm^2 at 4.2 K and 12 T (to be operated at 1.8 K)

Program for LHC Upgrade at Twente University

- Twente University has signed in 1998 a 3-year contract with CERN and NIKEF to build a large aperture (88 mm) dipole magnet model with an operating field of 10 T and an operating temperature of 4.4 K
- Such a magnet could be used for an upgrade of the low-field (2.74 T and 3.8 T), beam-separation dipole magnets, localized near the crowded LHC interaction points

Program for LHC Upgrade at Twente University (Cont.)

- **The design is completed and practice coils are now being wound. The magnet model should be tested at CERN in June 2001.**

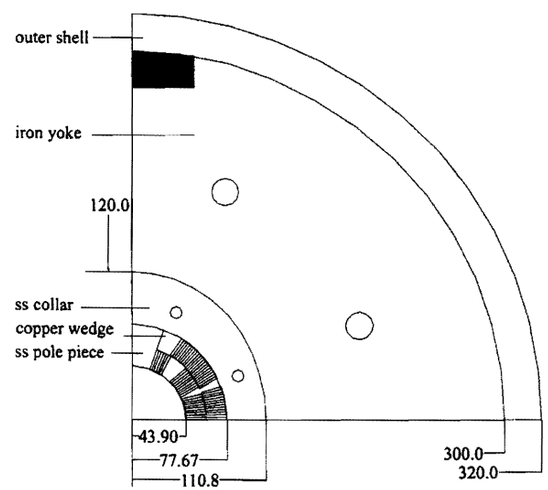

(Courtesy A. den Ouden)

Program for LHC Upgrade at Twente University (End)

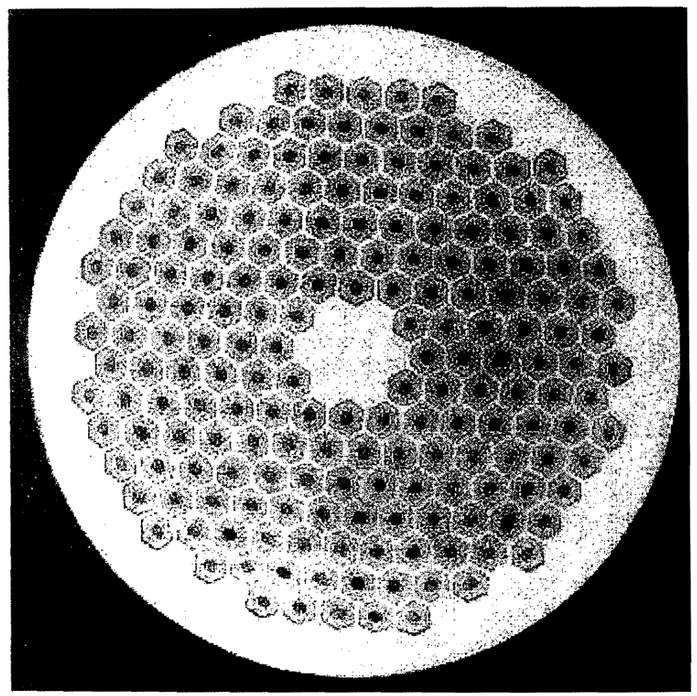

(Courtesy A. den Ouden)

- The Twente magnet will use a Rutherford-type cable made up of Nb_3Sn wires produced according to the "Powder-in-Tube" (PIT) process by ShapeMetal Innovation (SMI)
- SMI has recently achieved a record J_C(non-Cu) of 2300 A/mm^2 at 4.2 K et 12 T with an effective filament size of 50 μm (50 kg billet)

Contents

- Magnet Types
- Brief History and State of the Art
- Review of R&D Programs
  - LHC Upgrade
  - VLHC
  - TESLA
- Muon Collider
- Conclusion

Origins of VLHC

- 1994: Drell panel suggests that "it may be technically feasible to build a proton collider with beam energies up to 10 times those of the LHC with technology that could be developed during the next decade".
- 1996: Snowmas workshop where various proposals of hadron colliders with 100 TeV center-of-mass energy are examined.
- 1997: Gilmann panel recommends "... an expanded program of R&D on cost reduction strategies, enabling technologies, and accelerator physics issues for a VLHC".

$\Rightarrow$ In response, the Directors of BNL, Fermilab, LBNL, Cornell University and, more recently, SLAC, have appointed a VLHC steering committee to coordinate the R&D efforts.

VLHC Activities in the USA

- National materials R&D program in industry to improve the performance and decrease the cost of Nb_3Sn wires
- Vigorous magnet R&D programs at BNL, Fermilab, LBNL and Texas A&M
- Investigations of tunneling techniques and geological studies on Fermilab site

VLHC Design Options

- **Two design options are presently considered for VLHC**
  - **a low-field option (2 T), relying on low-cost, superferric magnets (G.W. Foster, et al.) (Fermilab)**
  - **a high-field option (≥11 T), relying on Nb_3Sn or HTS magnets (BNL, Fermilab, LBNL and Texas A&M)**

Low-Field Option

Transmission Line Magnet

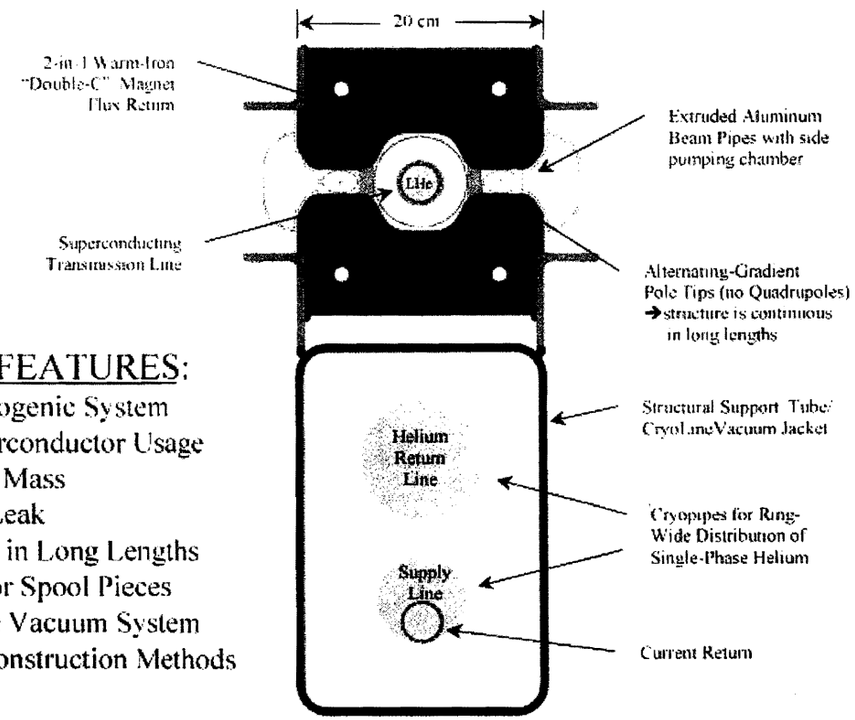

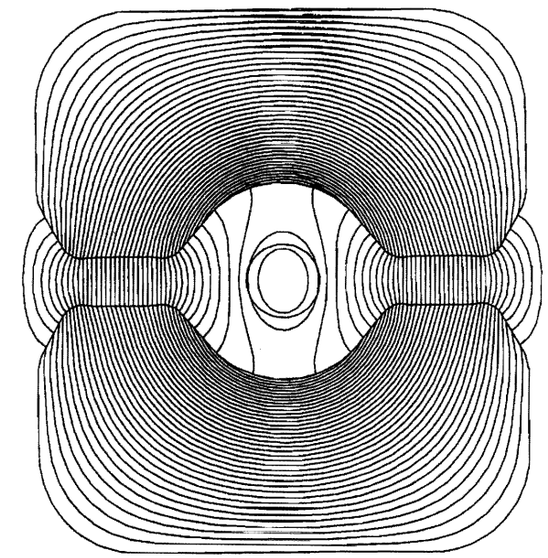

KEY FEATURES:

- Simple Cryogenic System
- Small Superconductor Usage
- Small Cold Mass
- Low Heat Leak
- Continuous in Long Lengths
- No Quads or Spool Pieces
- Warm Bore Vacuum System
- Standard Construction Methods

Low-Field Option (Cont.)

BASELINE (Rutherford Cable-in-Conduit) DESIGN

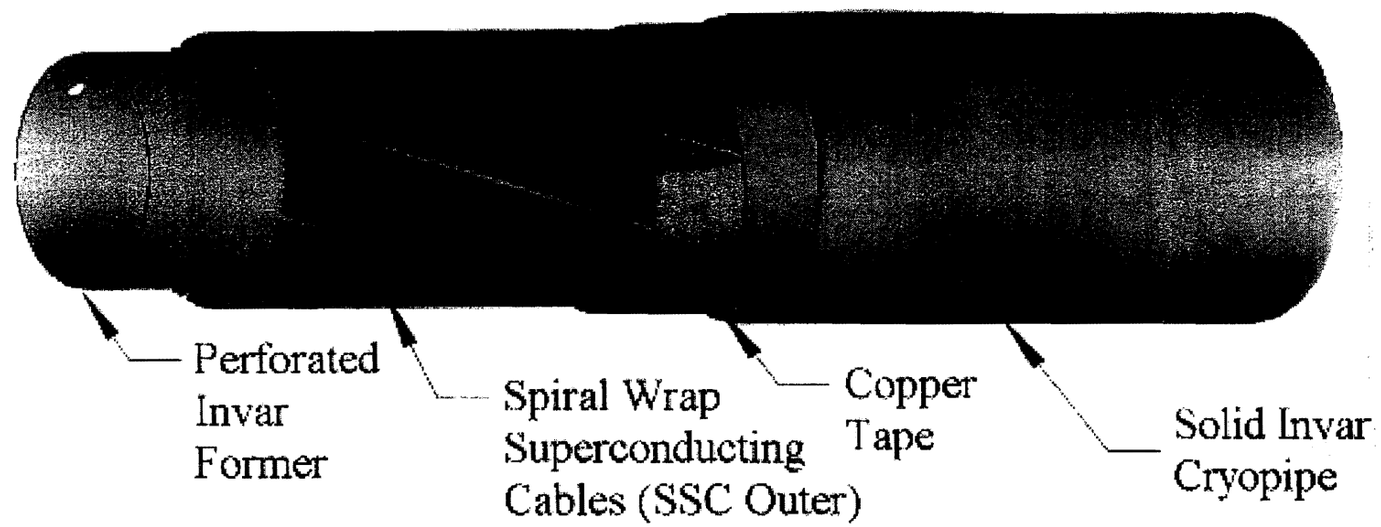

- **Surplus SSC wires and cables can be used to produce a 30-km-long line**

Low-Field Option (End)

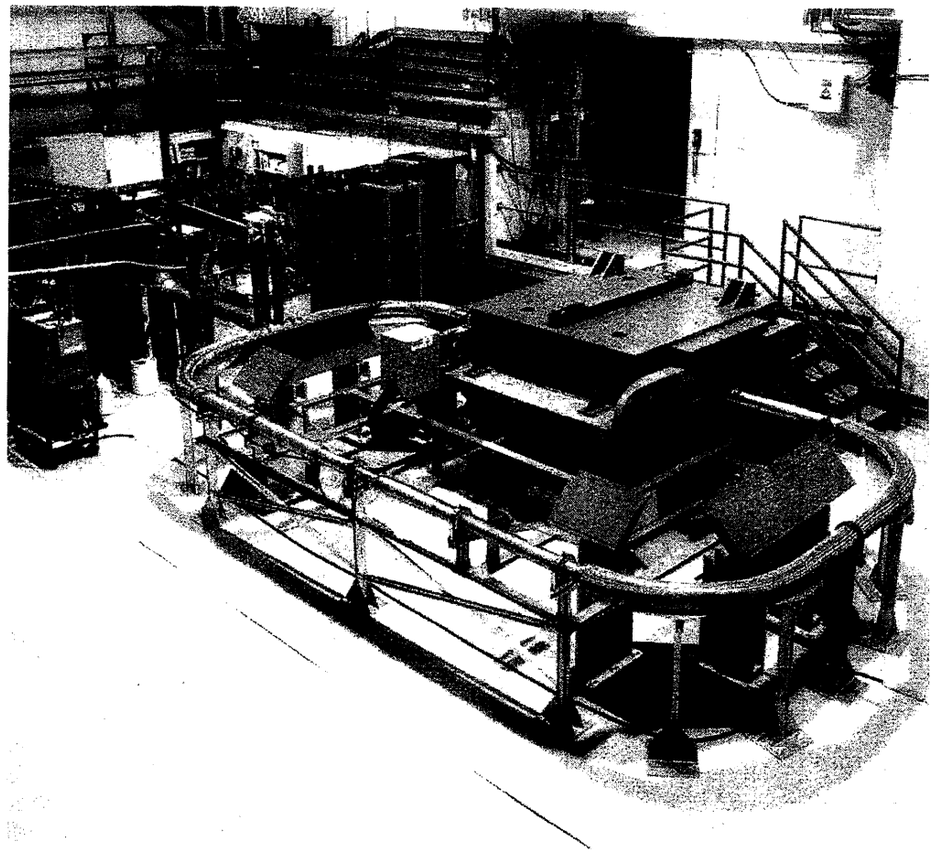

- A 17-m-long demonstration loop has been built at Fermilab and has been excited up to 100 kA
- The plan is to build, within 2 years, a 60-m-long magnet section

High-Field Option

- Four different high-field magnet designs are being investigated
  - Conventional 2-in-1, cosθ design, extending SSC and LHC technology to Nb_3Sn (Fermilab)
  - Innovative "common coil" design proposed by R. Gupta (BNL, Fermilab, LBNL)
  - Sophisticated "stress management" design proposed by P. McIntyre (Texas A&M)

Cosθ Design at FNAL

- Fermilab has started in 1998 an ambitious high field magnet program

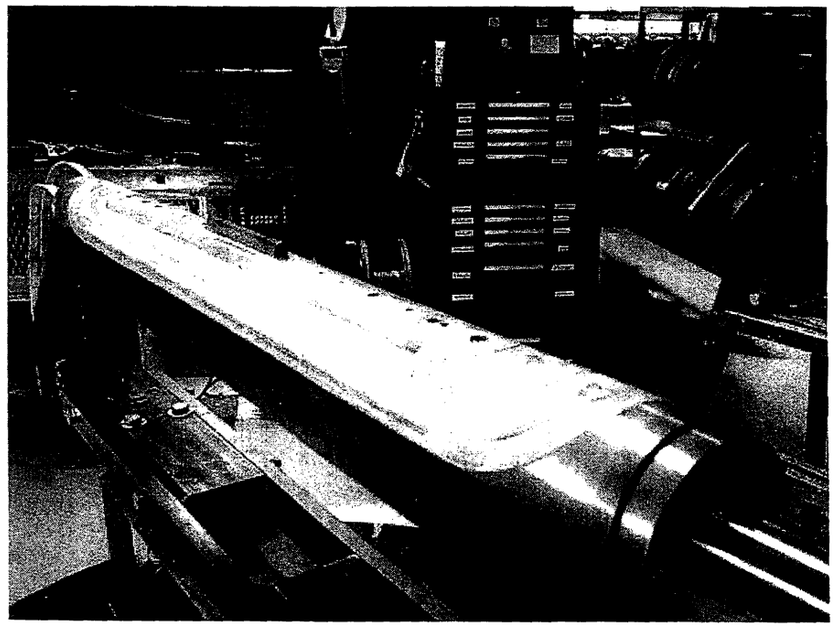

(Courtesy S. Zlobin)

- The plan is to build four Nb_3Sn dipole magnet models (11 T in a 43.5 mm aperture)
- First single-aperture version to be tested in September 2000
- First twin-aperture version to be tested in September 2001

"Common Coil" Design

- In 1996, R. Gupta has proposed an innovative twin-aperture dipole magnet design based on pairs of racetrack-type coils

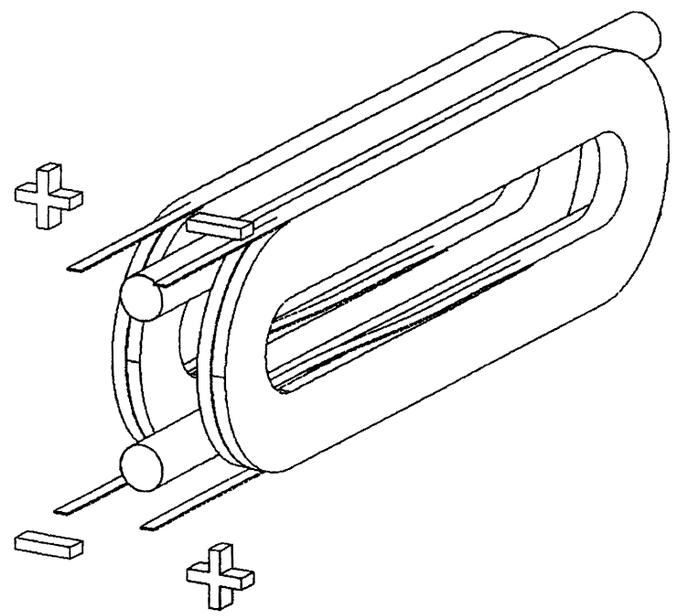

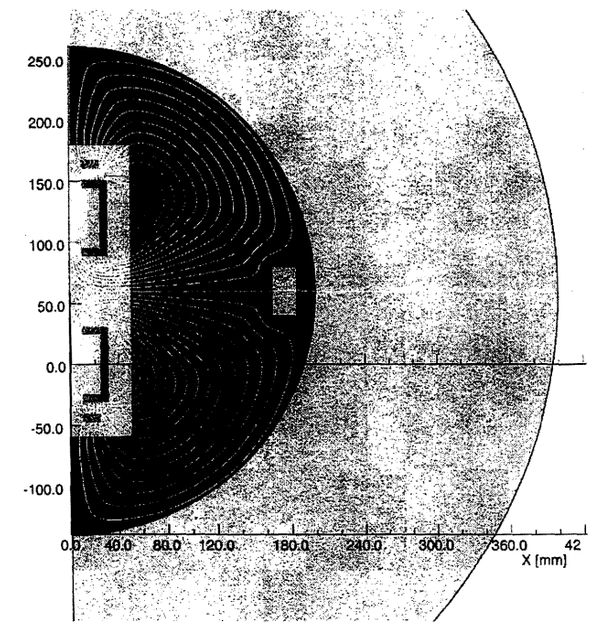

(Courtesy R. Gupta)

"Common Coil" Design at LBNL

- **LBNL has tested in 1998 a "proof of principal" model made up of one pair of Nb_3Sn coils separated by 40 mm, which reached 5.9 T on its first quench at 4.2 K**

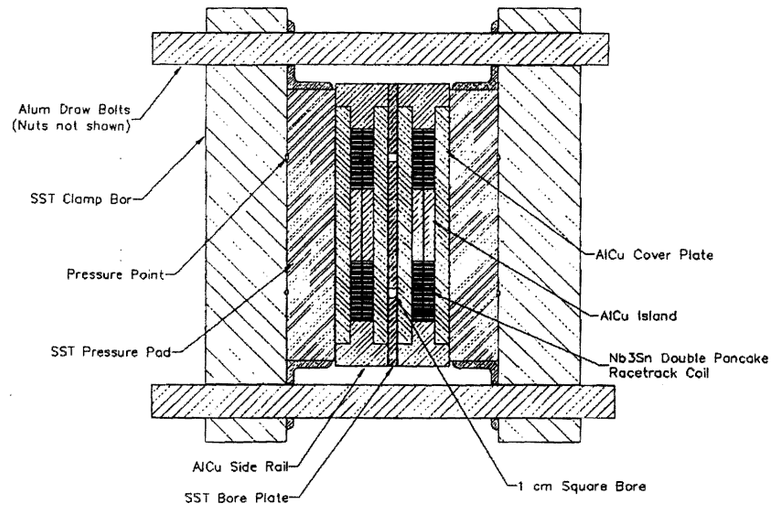

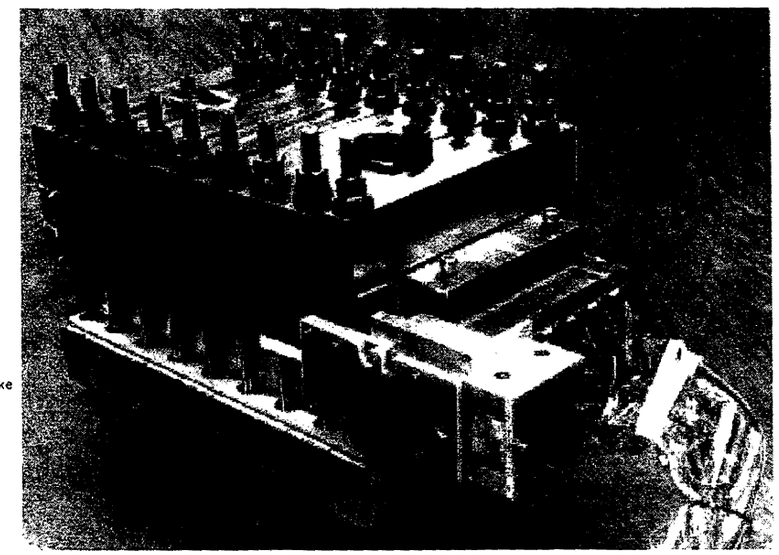

(Courtesy S.A. Gourlay)

"Common Coil" Design at LBNL (Cont.)

- LBNL is now building at 14 T model made up of two pairs of Nb_3Sn coils with a spacing of 40 mm

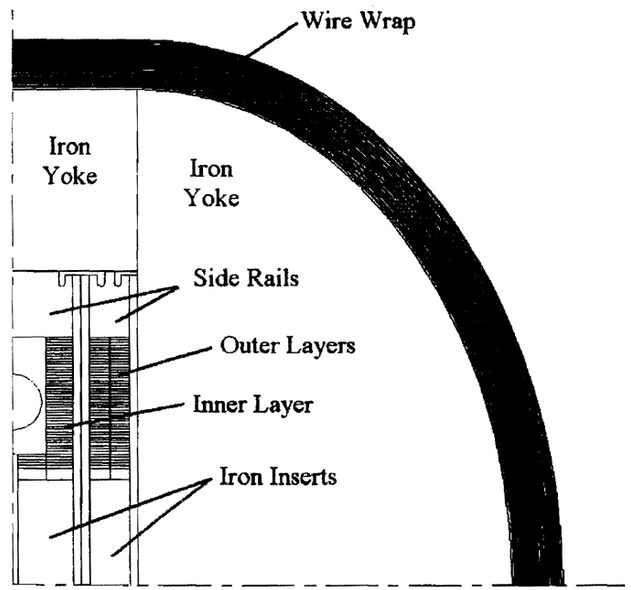

(K.P. Chow, 1998)

- The outer pair was tested in March 2000 (with a 10 mm spacing) and has reached 11.5 T
- The plan is to test the full assembly in September 2000

"Common Coil" Design at Fermilab

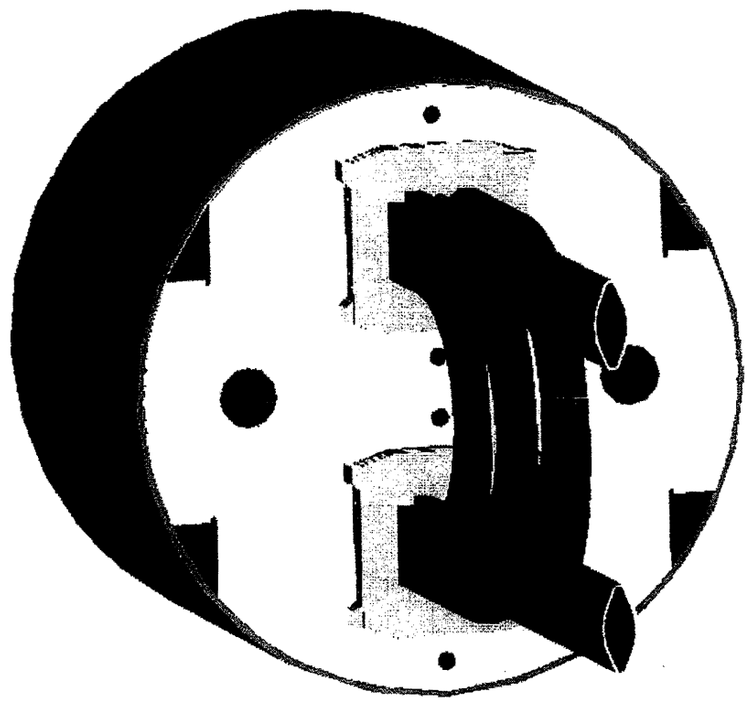

(Courtesy G. Ambrosio)

- Fermilab is developing a lower field variant (11 T) relying on two pairs of coils with
  - a Nb_3Sn outer pair built according to the "react & wind" technique
  - a NbTi inner pair
- The plan is to build a short model magnet by the Summer of 2001

"Common Coil" Design at BNL

- BNL has built a 1-m-long magnet model relying on NbTi coils designed to produce a 6-to-7 T background field to test racetrack-shaped insert coils

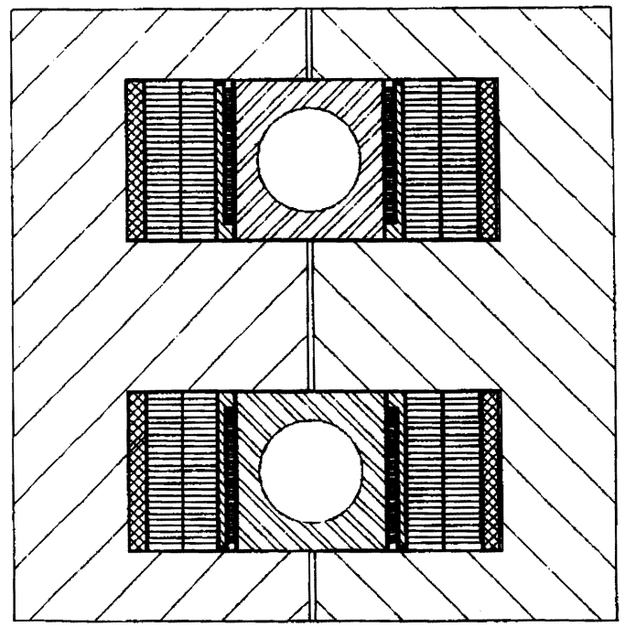

(A.K. Ghosh, 1999)

- A first set of insert coils wound from pre-reacted Nb_3Sn tapes was tested in 1999
- The plan is to use this facility as a test bench for HTS tapes

"Common Coil" Design at BNL

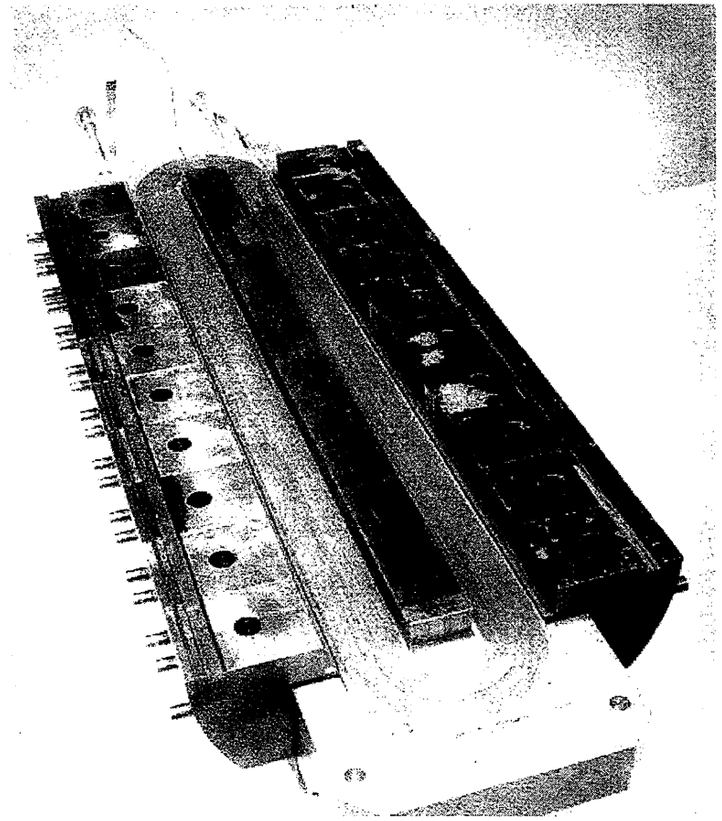

Nb_3Sn Insert

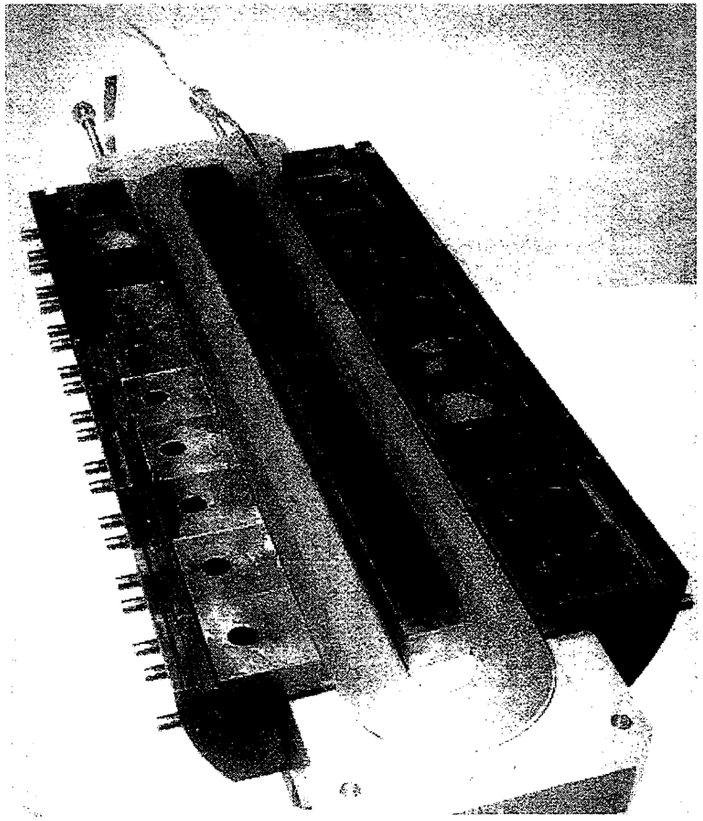

NbTi Outsert

"Stress Management" Design

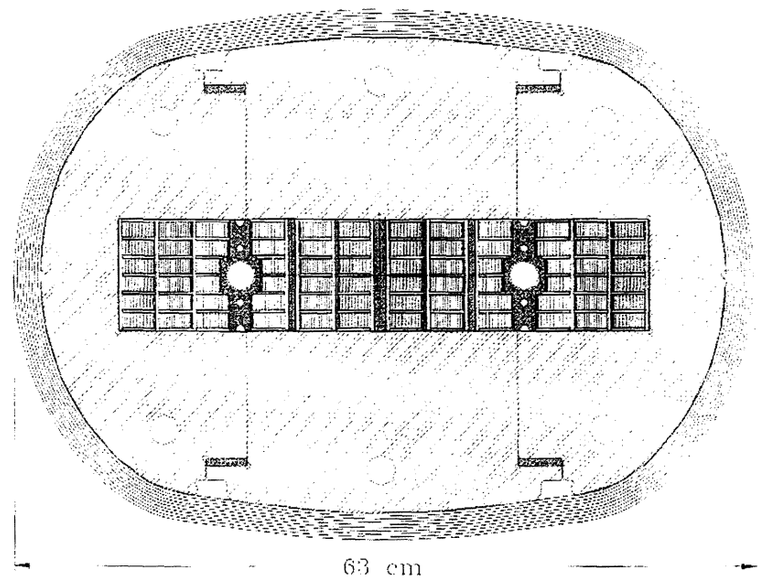

- Texas A&M University has developed a 16 T dual-dipole magnet design, where the conductors are divided into blocks to limit the stresses to less than 100 MPa
- A single-aperture, NbTi model is under construction

(Courtesy P. McIntyre)

[redacted]

Contents

- Magnet Types
- Brief History and State of the Art
- Review of R&D Programs
  - LHC Upgrade
  - VLHC
  - TESLA
- Muon Collider
- Conclusion

Final Focusing of TESLA

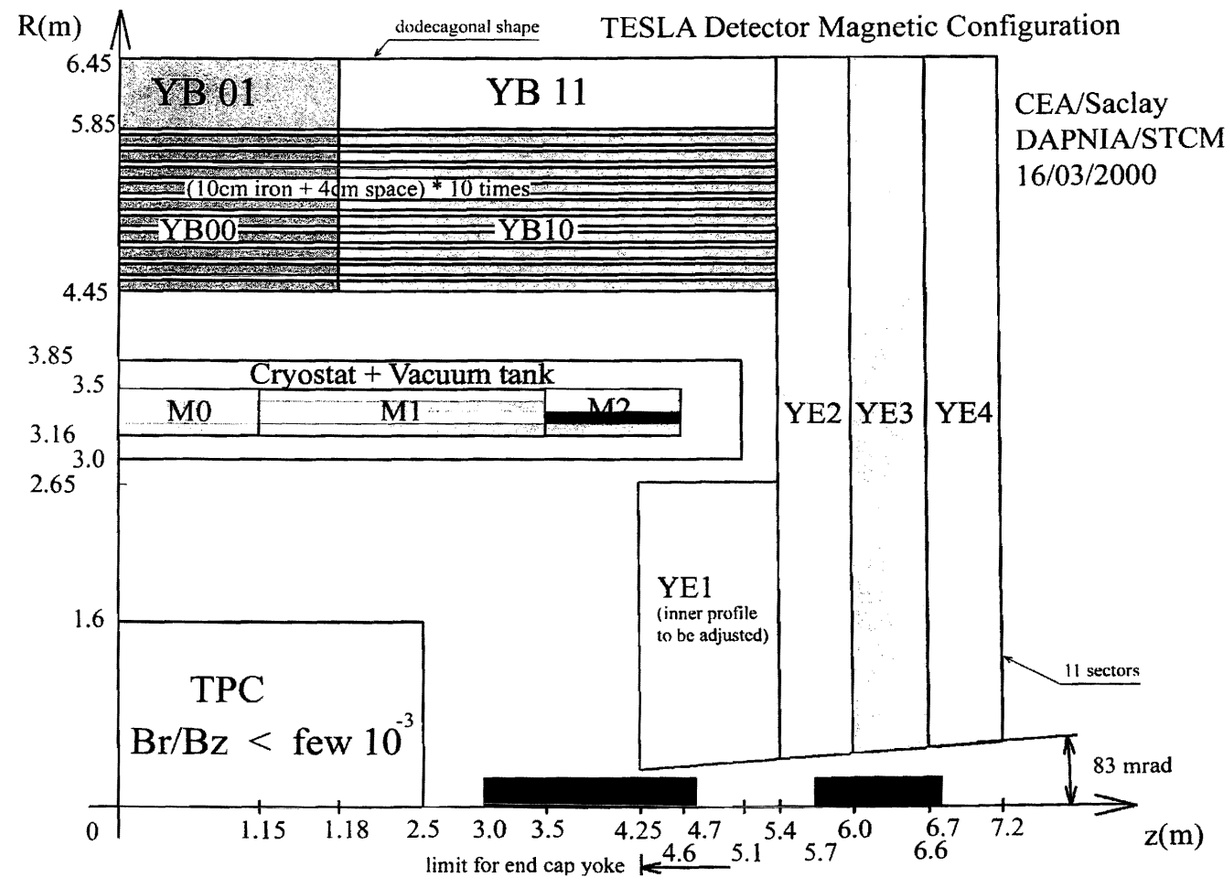

(Courtesy F. Kircher)

Final Focusing of TESLA (Cont.)

- The 4 final focusing quadrupole magnets are modeled after the LHC arc quadrupole magnets (with a single aperture of 56 mm and a field gradient of 250 T/m),
- but two of the magnets are positioned within the detector solenoid and must sustain a 4 T axial field.
- The presence of the background field precludes the use of NbTi and calls for the use of Nb_3Sn.

Nb_3Sn Program at CEA/Saclay

- CEA/DSM/DAPNIA/STCM has started in 1996 a collaboration with Alstom to develop high performance Nb_3Sn wire and cable and to build a short quadrupole magnet model
- The program has been slow moving at CEA because of lack of manpower, but Alstom has completed its share of the R&D work and is ready to start the production of the final cable lengths (5 x 60 m)

Results of Alstom Program

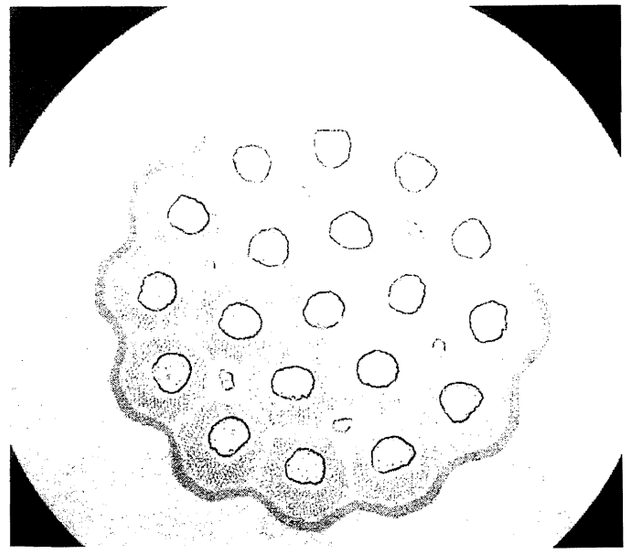

(Courtesy R. Otmani)

- The collaboration has enabled Alstom to produce
  - a Nb_3Sn wire with a J_C(non-Cu) of 750 A/mm^2 at 4.2 K and 12 T and an effective filament size of 18 μm
  - a Rutherford-type cable with a 25-μm-thick stainless steel (annealed 316L) core

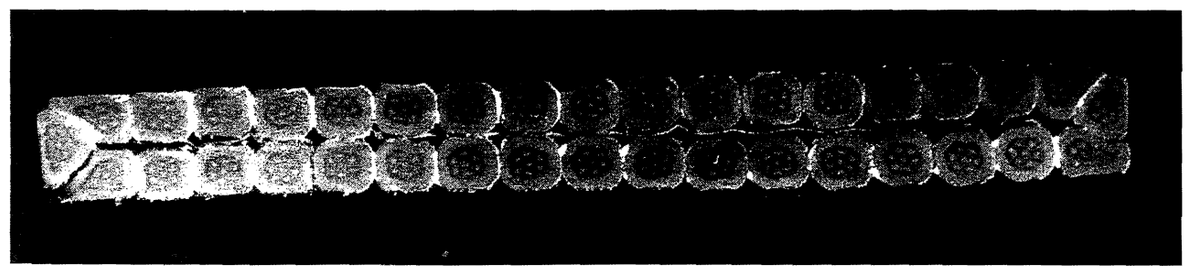

Status of Saclay Program

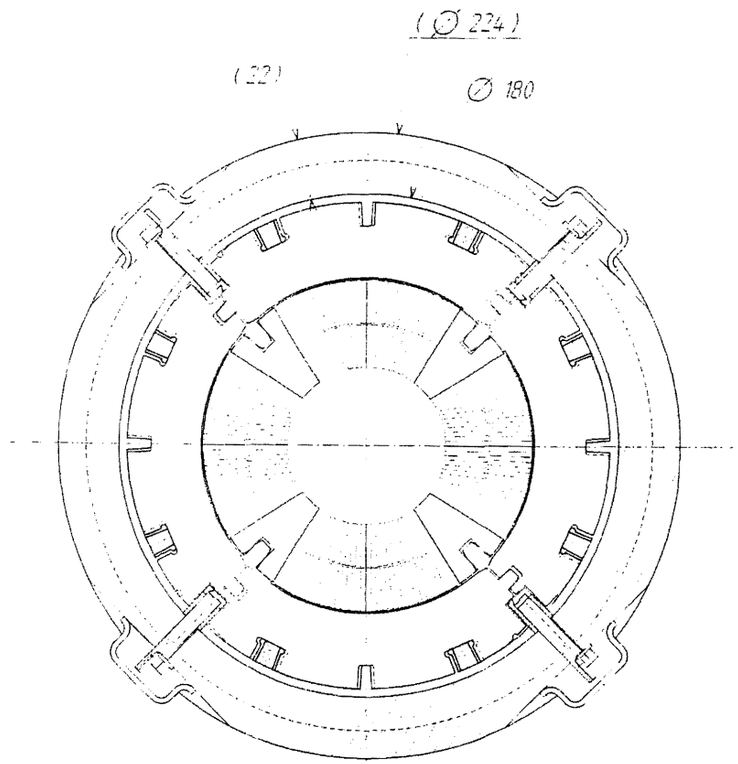

(Courtesy J. Thinel)

- The detailed design of quadrupole magnet model is presently underway
- It relies extensively on the design of the LHC arc quadrupole magnets (with a single aperture and no iron yoke)
- The plan is to test the model in March 2003
- The model is expected to achieve 223 T/m at 4.2 K

New Collaboration Program

- Discussions are underway with Alstom for a new collaboration to develop a wire with a J_C(non-Cu) of 2000 A/mm^2 at 4.2 K and 12 T and no specifications on effective filament diameter (except that the wire should be stable against flux jump)
- Such wire could be used to build a second quadrupole magnet model that would be suitable for TESLA

Contents

- Magnet Types
- Brief History and State of the Art
- Review of R&D Programs
  - LHC Upgrade
  - VLHC
  - TESLA
- Muon Collider
- Conclusion

Why Muons?

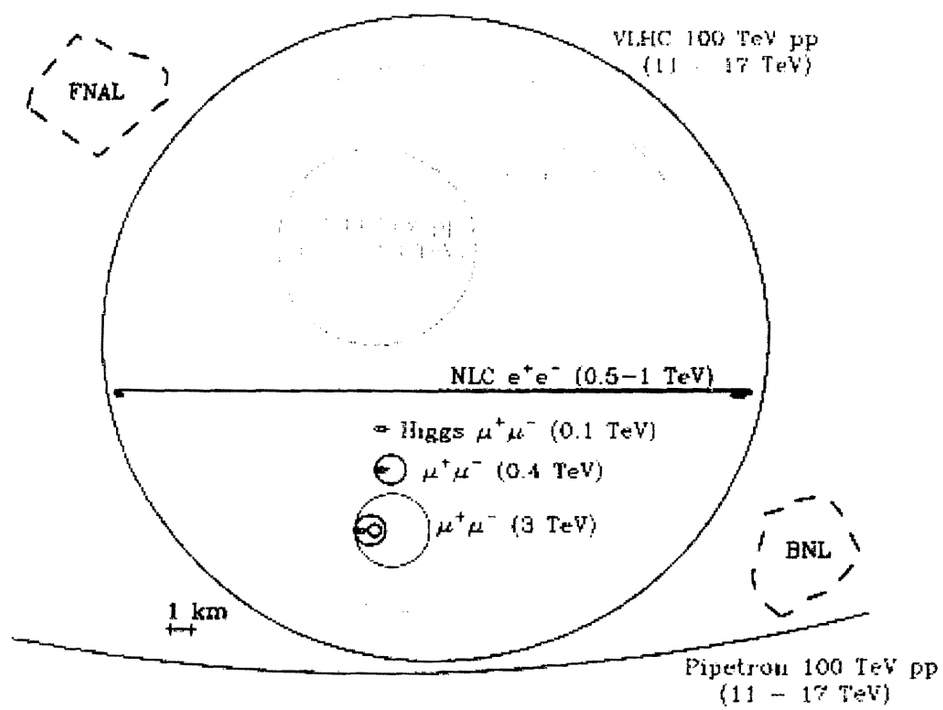

(C.M. Ankenbrandt, 1999)

- **Muons are spin-½, point-like, Dirac particles, with a mass ~207 that of an electron**

⇒ They radiate far less, enabling higher energies to be reached and smaller collider rings to be used

2 x 2 TeV Muon Collider Schematic

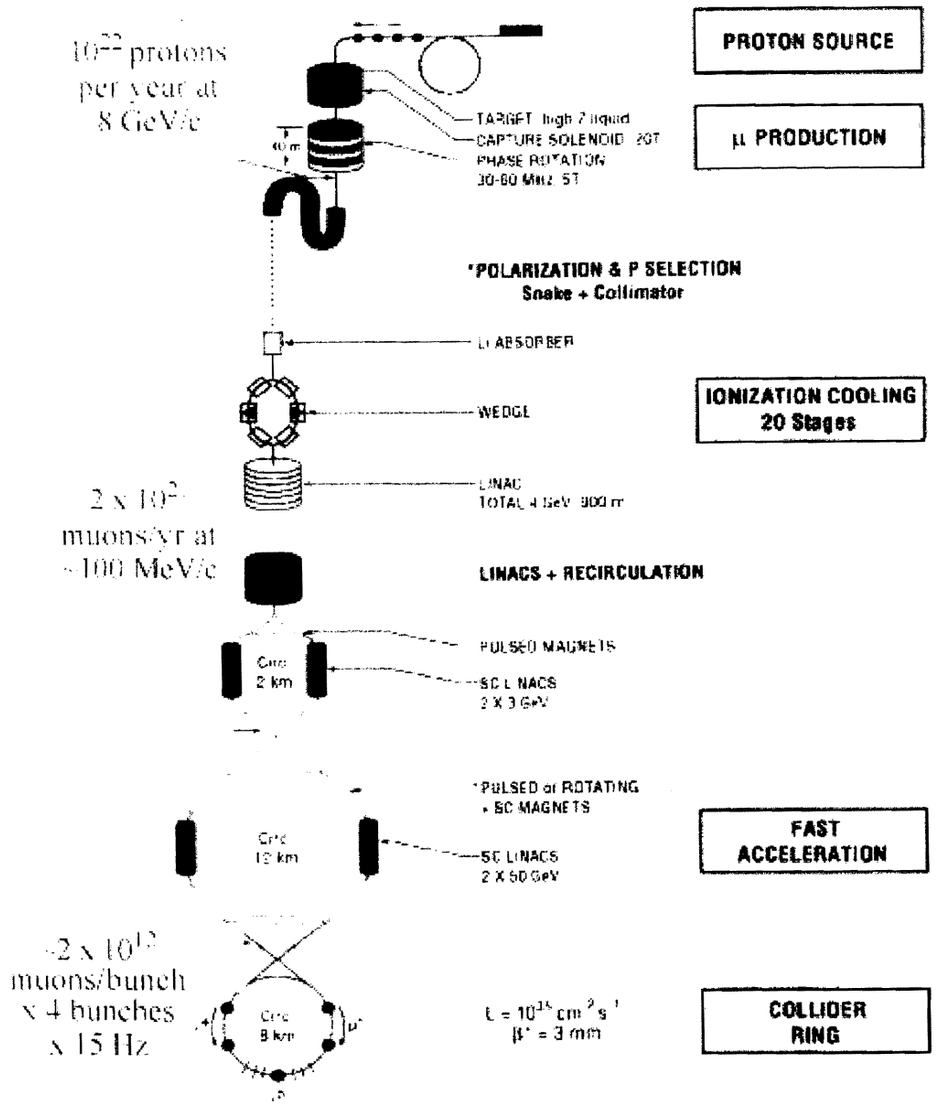

Challenges of Muon Collider

- **The muons must be produced, cooled, accelerated and collided within 2.2 μs ($c\tau \approx$ 659 m)**
- **Each stage requires a significant step in technology**

Pion Production and Capture

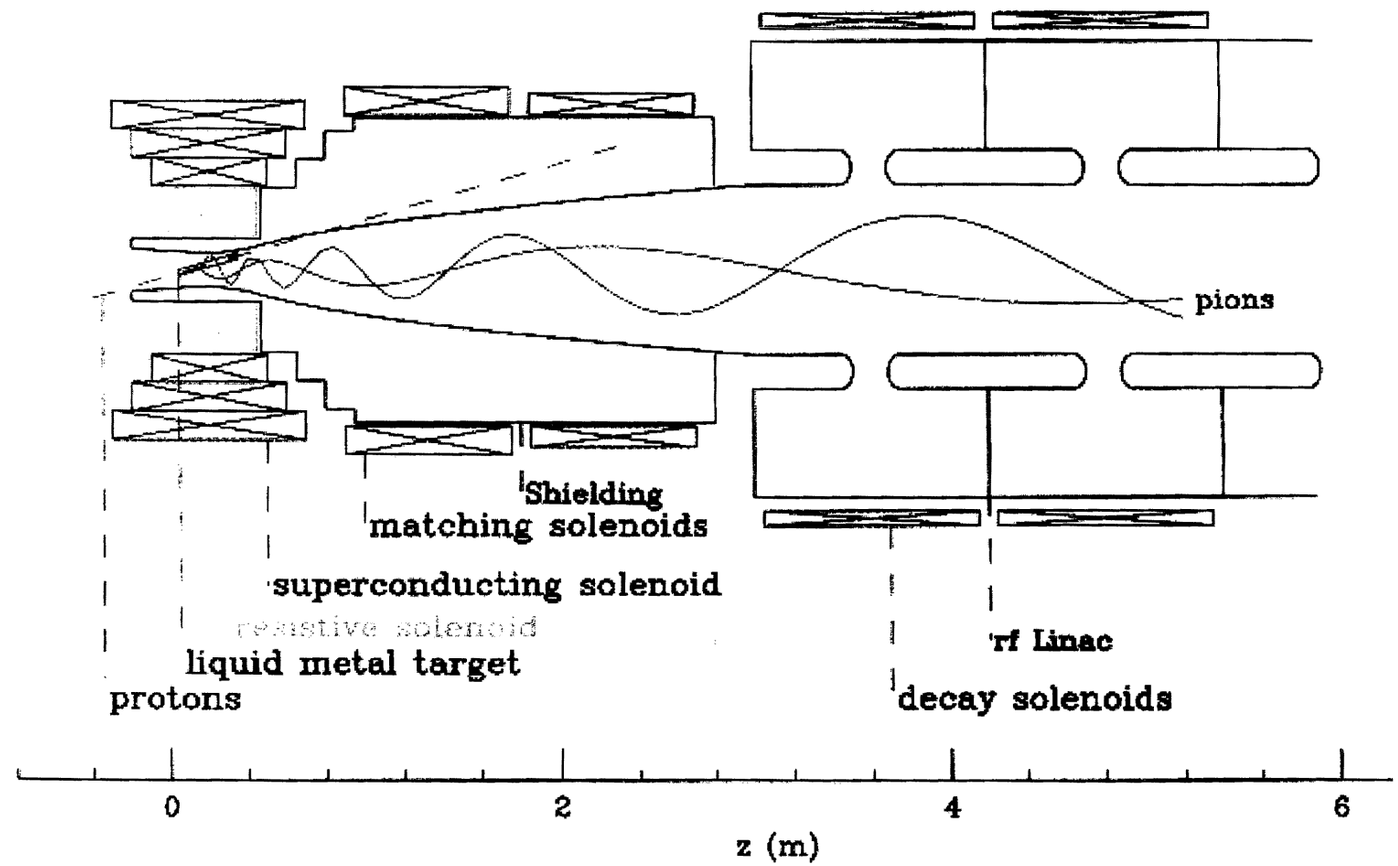

(C.M. Ankenbrandt, 1999)

Muon Collider Ring

- **Conceptual design for a low-cost, 5-T, NbTi dipole magnet with a large opening at the midplane to clear decay products**

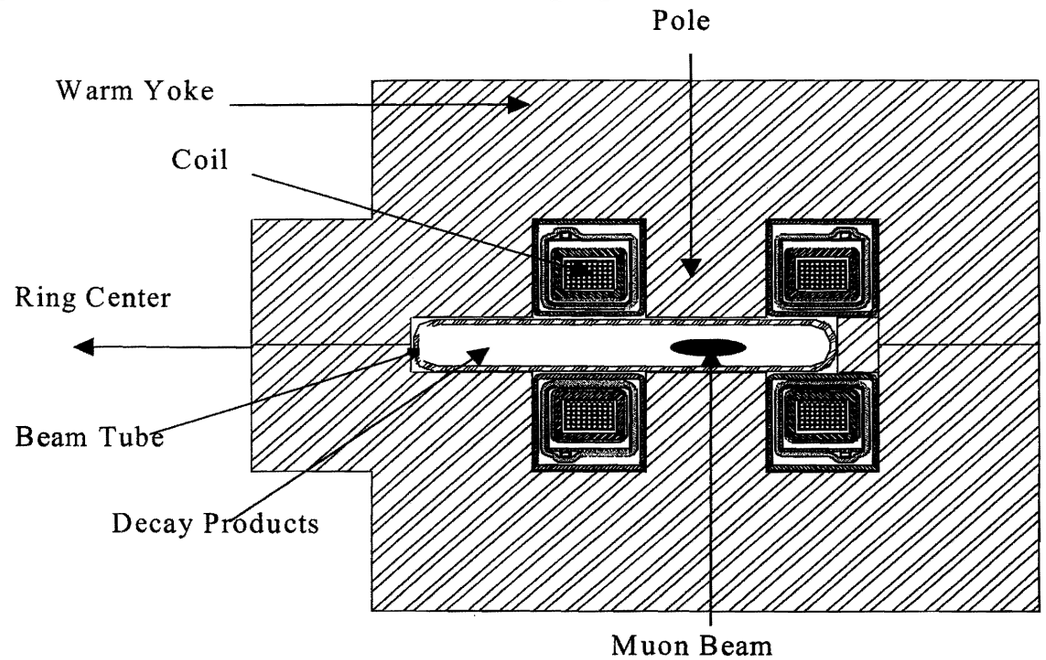

(Courtesy R. Gupta)

Contents

- Magnet Types
- Brief History and State of the Art
- Review of R&D Programs
  - LHC Upgrade
  - VLHC
  - TESLA
- Muon Collider
- Conclusion

Conclusion

- LHC magnet R&D program shows that the limit for NbTi at 1.9 K could be between 9 and 10 T
- Encouraging results have been obtained on a few Nb_3Sn magnet models, opening the 10 to 15 T range
- Given that LHC will have taken nearly 25 years to build, it is already time to think of the future