COBE-PREPRINT-NO-93-10E
C93/07/11.2

Fermilab Library
0 1160 0020717 9

Design of the Diffuse InfraRed Background Experiment (DIRBE) on COBE

Robert F. Silverberg[1], Michael G. Hauser[1], Nancy W. Boggess[1],
Thomas J. Kelsall[1], S. Harvey Moseley[1], and Thomas L. Murdock[2]

10

[1]NASA Goddard Space Flight Center, Code 685
Laboratory for Astronomy and Solar Physics, Greenbelt, MD 20771

[2]General Research Corporation, 5 Cherry Hill Dr., Danvers, MA 01923

COBE-Preprint-NO-93-10E

ABSTRACT

The Diffuse InfraRed Background Experiment (DIRBE) onboard the Cosmic Background Explorer (COBE) was designed to conduct a search for a cosmic infrared background (CIB), which is expected to be the fossil radiation from the first luminous objects in the universe. The instrument, a ten-band cryogenic absolute photometer and three-band polarimeter with a 0.7° beam and a wavelength range from 1-240 μm, scans the sky redundantly and samples half the sky each day. During the ten month lifetime of the cryogen, the instrument achieved a nominal sensitivity on the sky of 10^{-9} W/m^2/sr at most wavelengths, or ~1% of the natural background at wavelengths where the sky is very luminous. The short wavelength bands from 1-5 μm continue to operate after exhaustion of the cryogen, although at reduced sensitivity. In this paper, we review the design, testing, and in-flight performance of the DIRBE.

1. INTRODUCTION

Big Bang cosmology provides a detailed framework to explain several key observations: the helium abundance in the universe; the redshift of galaxies; and the Cosmic Microwave Background (CMB) radiation. In the Big Bang paradigm, the period from the decoupling of matter and radiation to the epoch corresponding to the most distant objects we now observe represents a cosmic "dark age". When the first self-luminous objects formed, they left an as yet unobserved radiative fossil everywhere in the cosmos. Early papers[1–3] predicted that the cumulative emission of such pregalactic, protogalactic, and galactic systems should leave signatures in the infrared (1-1000 μm) due to both redshift and re-emission of absorbed short wavelength radiation by dust in the early universe. More recent theoretical treatments of this CIB[4–6] provide more detailed models for both its spectrum and anisotropy, but these models are almost unconstrained by observations. It is clear from these theoretical predictions of the CIB, however, that its detection should provide insight into the evolution of infrared-bright galaxies, the nature of the pre-galactic universe, and limits on the amount of matter undergoing luminous episodes in the past.

The Diffuse Infrared Background Experiment (DIRBE) on the COBE spacecraft is the first satellite instrument specifically designed and built to perform a systematic search for this elusive but necessary piece in the cosmological puzzle. Its goal is to search for an isotropic extragalactic infrared background by measuring the intensity of infrared radiation in a number of photometric bands over the entire sky, and to make it possible to model and remove strong astrophysical foreground emissions.

2. DESIGN CONSIDERATIONS

In contrast to the CMB, which is the dominant radiative component in the sky over a wide wavelength range near 1 mm, the CIB is expected to be a small signal immersed in the radiation produced locally (Figure 1). The scattered and thermal emission from the interplanetary dust are strong at short infrared wavelengths and the Galaxy is very bright at long wavelengths. The DIRBE approach is to obtain absolute brightness maps of the full sky in ten photometric bands from 1-240 μm. Because the zodiacal scattered component is known to be highly polarized, the DIRBE also measures linear polarization at 1-3.5 μm. Inclusion of polarimetric channels provides a significant discriminator for accurate determination of the characteristics of this nearby source of radiation. DIRBE must be an absolute photometer, accounting for all photons entering it. After discriminating all instrumental and "local" astrophysical sources of radiation, the remainder of the isotropic energy may be attributed to cosmological origin. The DIRBE demands strong rejection of stray light[7]. Any strong source (e.g., Earth, Moon) could contribute to an apparent signal in this sensitive instrument even if it were very far off the optical axis.

Observing the CIB represents a difficult experimental task. Over much of the spectral range of interest, the Earth's atmosphere is opaque. Even from high altitude locations where the atmosphere is nearly transparent at some of the

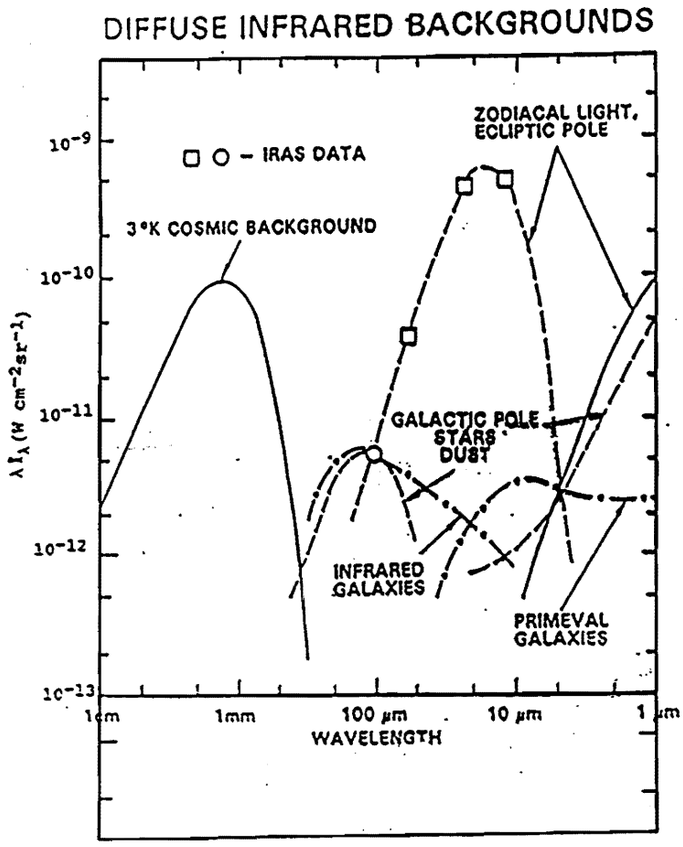

Figure 1: Schematic of the diffuse radiation fields observable by the COBE. The curves show expected backgrounds from local astrophysical sources and some theoretical models for contributions from primeval galaxies.

wavelengths of interest, experiments are troubled with signals from the unstable and luminous atmosphere. Above the atmosphere, stray radiation and emission from the instrumentation itself may contaminate the cosmic signals and all experiments must deal with the "local" backgrounds from the interplanetary dust and from galactic emission, which cannot be circumvented from any available observing platform. Although an extragalactic background has been reported at near-infrared wavelengths[8], recent rocket flights with the same instrument[9] do not confirm the earlier measurements in detail. Short observing times and contamination from terrestrial emission limit the ability of these rocket-borne instruments to carefully examine possible sources of systematic errors.

A satellite in Earth orbit, with its long duration and stable environment, offers the best opportunity for observing the CIB. In the near vacuum of space, large aperture cryogenic optical elements can be used without contamination problems and instrumental thermal self-emission can be eliminated even at long wavelengths. With sufficient time, total sky coverage may be achieved and systematic error sources can be determined and removed from the data. While emission from the Galaxy and re-radiated and scattered sunlight from interplanetary dust are unavoidable foreground sources, an observing strategy that modulates the solar elongation angle permits separation of the variable zodiacal light and emission from sources beyond the solar system.

Since it was anticipated that DIRBE would require at least six months in orbit to complete its mission, it was necessary to maintain stability and to monitor instrument performance on time scales short compared to any changes. The benign environment of space, with the spacecraft in a sun-synchronous orbit, is thermally stable because the spacecraft spins and is nearly always illuminated by the Sun. In addition to this favorable environment, commandable

heaters were incorporated into the electronics boxes to permit adjustment of the operating temperature.

As with any absolute instrument, an offset, no matter what its origin, would modify the signal being measured. To avoid confusion from this problem, a zero reference input had to be incorporated into the instrument. We discuss both the zero-reference and the stability/offset-monitoring procedures below.

3. THE COBE SATELLITE

Detailed descriptions of the COBE satellite and mission are given elsewhere[10-11]. There are three instruments aboard spanning the wavelength range from 1 μm to 1 cm. The instruments are a Far InfraRed Absolute Spectrometer[12] (FIRAS) to determine the spectrum of the CMB, a Differential Microwave Radiometer[13] (DMR) to search for spatial anisotropy in the CMB, and the DIRBE to search for the CIB[14].

The COBE was placed into a 900 km altitude terminator orbit with a 99 degree inclination on November 18, 1989 by a DELTA I rocket from Vandenberg Air Force Base. At this altitude the Earth's quadrupole moment precesses this orbit 1 degree per day, so the ascending node of the orbital plane follows the terminator and keeps the satellite sun-synchronous. The 6 PM ascending node was chosen to maximize the amount of time the satellite would be in orbit before some eclipsing by the Earth took place. No Earth eclipse periods occurred for COBE until May 1990.

At launch, the COBE dewar contained 600 liters of superfluid ^{4}He, which cooled both FIRAS and DIRBE to 1.6 K in orbit. Once in orbit, the spacecraft attitude control system oriented the spacecraft spin axis 94° from the Sun and always generally away from the Earth. Because the science requirements of all of the experiments called for the satellite to spin and always point away from the Earth, the spin angular momentum of the spacecraft was canceled by two counter-rotating internal momentum wheels. In this way a zero angular momentum spinning spacecraft was achieved and the satellite could be rotated about the Sun-Earth line once each orbit. With a spin rate of 0.82 revolutions per minute, the two instruments with lines of sight offset from the spacecraft spin axis, the DIRBE and DMR, are able to sample about half the sky each day.

Spacecraft attitude is controlled by reaction wheels on three perpendicular axes with Sun sensors, Earth sensors and gyroscopes used for attitude sensing. Any buildup of angular momentum is removed by torquing the spacecraft using electromagnets that interact with the Earth's magnetic field. Details of the attitude control system are described by Bromberg and Croft[15] and many of the other spacecraft subsystems are described in the papers by Boggess et al.[10] and Mather[11].

4. INSTRUMENT DESCRIPTION

The DIRBE instrument is a cryogenically-cooled ten band absolute photometer (Figure 2 and Table 1). Optics were carefully designed for strong stray light rejection[16]. The configuration (Figure 3) includes re-imaging with both a secondary field stop and a Lyot stop, superpolished primary and secondary mirrors to further reduce scattered light, an internal baffle as well as a reflective forebaffle and a complete light-tight enclosure within the COBE dewar to eliminate any optical cross-talk from the other cryogenic instrument, FIRAS . Additional protection from the Earth and Sun are provided by the attitude control system and by the Sun/Earth shade surrounding the COBE dewar, which prevents any direct illumination of the dewar or instrument apertures from these omnipresent strong local sources.

TABLE 1.

Telescope Diameter	19 cm
Telescope Type	Cryogenic off-axis folded Gregorian
Telescope Effective Focal Length	14.24 cm
Instantaneous Field Of View (FOV)	0.7°x 0.7°
Instrument type	photometer and polarimeter
Photometric bands	10
Wavelength Coverage	1-240 μm

The front end of DIRBE utilizes an off-axis folded Gregorian telescope with a 19-cm diameter off-axis segment of a parabolic mirror as the primary. Collimated light is imaged at the first field stop (Figure 3). An off-axis segment of

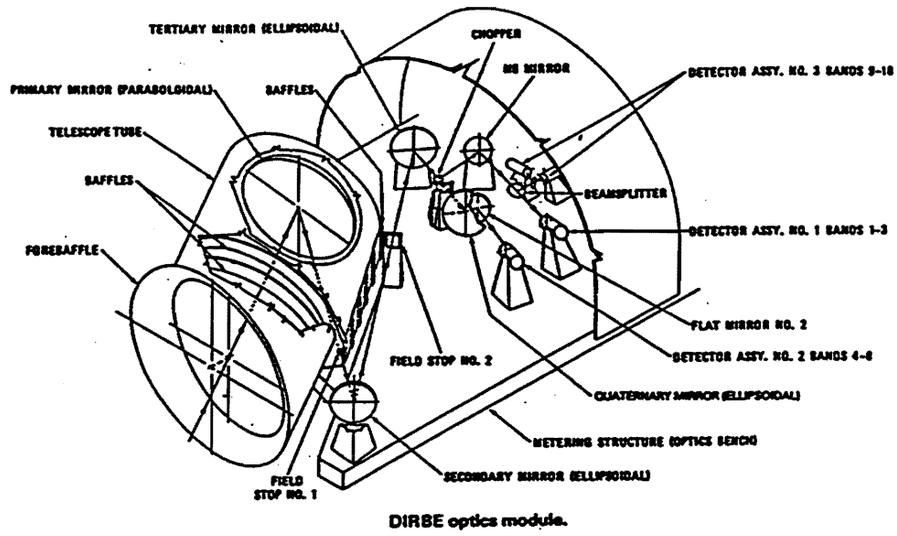

Figure 2: Schematic Diagram of DIRBE

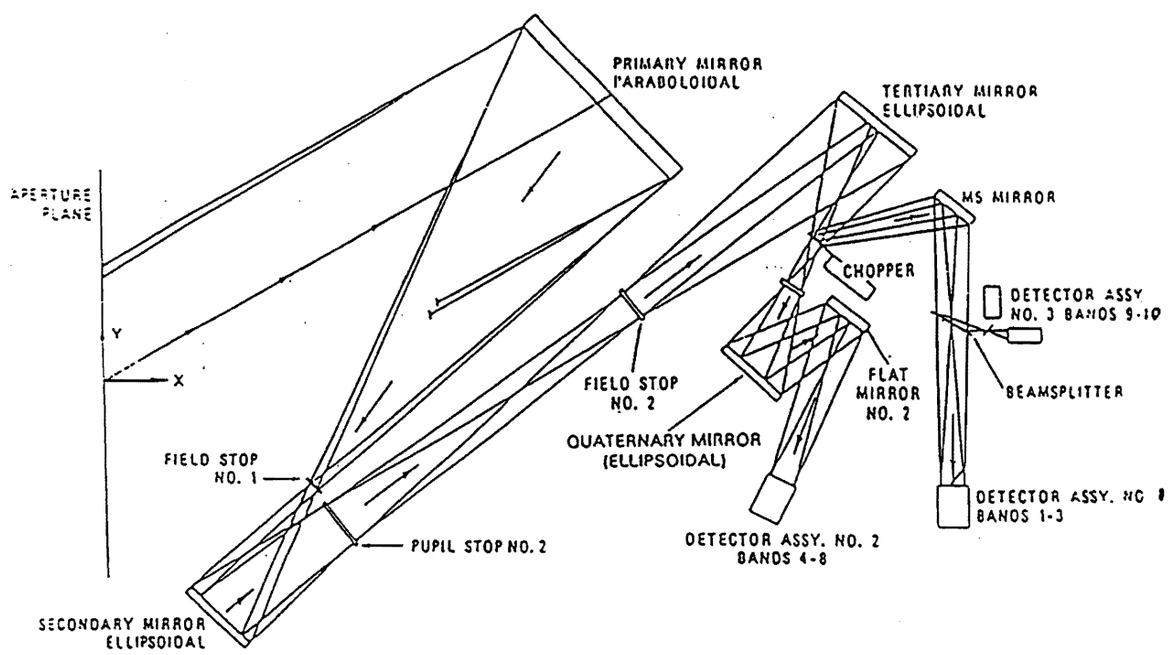

Figure 3: Optics Diagram of DIRBE

an elliptical secondary re-images the first field stop and forms an image of the primary at a pupil stop. This second pupil stop is re-imaged by the ellipsoidal tertiary mirror at a tuning fork chopper with mirrored blades. In the open position, light from the elliptical quaternary mirror and a folding flat send the light to a final pupil image at detector assembly 2. With the chopper closed, the aspheric mirror (M5) re-images the pupil onto detector assemblies 1 and 3.

Since the required sensitivity was modest in the first 8 bands (1-100 μm), pupil division was employed to divide energy between bands, giving these bands an effective etendue of 0.0044 cm^2 sr; the 140 and 240 μm bands used the entire entrance aperture and have an etendue of 0.044 cm^2 sr. In this optical arrangement, all detectors are located at a pupil image, and all simultaneously measure radiation from the same instantaneous field of view. The detectors and band-defining filters are arranged into three separate mechanical assemblies. The chopper splits the light temporally while beam splitters spectrally divide the light and direct it to appropriate detector assembly. The detector and filter characteristics are shown in Table 2. The bands at 1.2, 2.2, and 3.5 μm are each equipped with a detector measuring total intensity, and linear polarizers followed by two additional detectors. The polarizers are oriented parallel and perpendicular to the scan direction of DIRBE . These channels permit measurement of the linear polarization of the sky and are used primarily to discriminate the highly polarized scattered component of the zodiacal light from the unpolarized background[17].

Table 2.

Band	Detector Type	λ (μm)	$\Delta\nu_e$ (Hz)	Rms/FOV[1] in 10 Months $\nu I_\nu(10^{-9}W/m^2/sr)$	Filter Construction
1	InSb[2]	1.25	$5.7x10^{13}$	1.0	Coated Glass
2	InSb[2]	2.2	$2.2x10^{13}$	0.9	Coated Glass
3	InSb[2]	3.5	$2.3x10^{13}$	0.6	Coated Germanium
4	InSb[2]	4.9	$9.2x10^{12}$	0.5	MLIF[3]/Germanium
5	Si:Ga BIB	12	$1.2x10^{13}$	0.3	MLIF/Germanium/ZnSe
6	Si:Ga BIB	25	$1.5x10^{12}$	0.4	MLIF/Silicon
7	Ge:Ga	60	$2.2x10^{12}$	0.4	MLIF/Sapphire/ KRS5/Crystal Quartz
8	Ge:Ga	100	$1.2x10^{12}$	0.1	MLIF/KCl/CaF_2/Sapphire
9	Composite Si Bolometer	140	$6.0x10^{11}$	11	Sapphire/Mesh Grids/BaF_2/KBr
10	Composite Si Bolometer	240	$4.7x10^{11}$	4	Sapphire/Grids/BaF_2/CsI/AgCl

[1] Based on instrument dark noise in orbit; actual performance may be reduced by sky confusion noise.
[2] Anti-Reflection Coated for the band center wavelength.
[3] MLIF=multi-layer interference filter

The temperatures inside the cryostat were maintained below 1.6 K nearly all of the time while the cryogen supply lasted. Absolute surface brightnesses are measured by chopping between the sky signal and a cold internal beam stop, which is a zero-flux reference at the wavelengths of the DIRBE . The cryogenic tuning fork chopper operates at 32 Hz. Instrumental offsets were determined by closing off the sky from the instrument with a shutter located at the prime focus, field stop 1 (not shown in Figure 3). The back of the shutter has a mirror mounted on it that allows light from an internal reference source (IRS), located outside of the sky beam, to reach the detectors only when the shutter is closed. Measuring the instrument signal with the shutter closed and the IRS off permits determination of electrical and radiative offsets. Turning on the IRS at fixed levels permits determination of any system gain shifts. This procedure was carried out four times/orbit at the beginning of the mission. In orbits passing through the South Atlantic Anomaly (SAA) of the Earth's magnetic field, the procedure was executed six times per orbit because of the destabilizing effects on detectors of the intense ionizing radiation. After a time in orbit, it became clear that offsets were extremely stable and the frequency of stability checks was reduced to twice per orbit, except for orbits passing through the SAA.

By design, all of the spectral bands view the same instantaneous 0.7°x 0.7° square field-of-view. Optical testing showed small misalignments of the beam centroids (Table 3). Corrections for these small pointing offsets are applied in the ground data processing. As the DIRBE beam is oriented 30 degrees from the spacecraft spin-axis, the 0.82 rpm spin modulates the solar elongation angle of the DIRBE line-of-sight by 60 degrees during each spacecraft

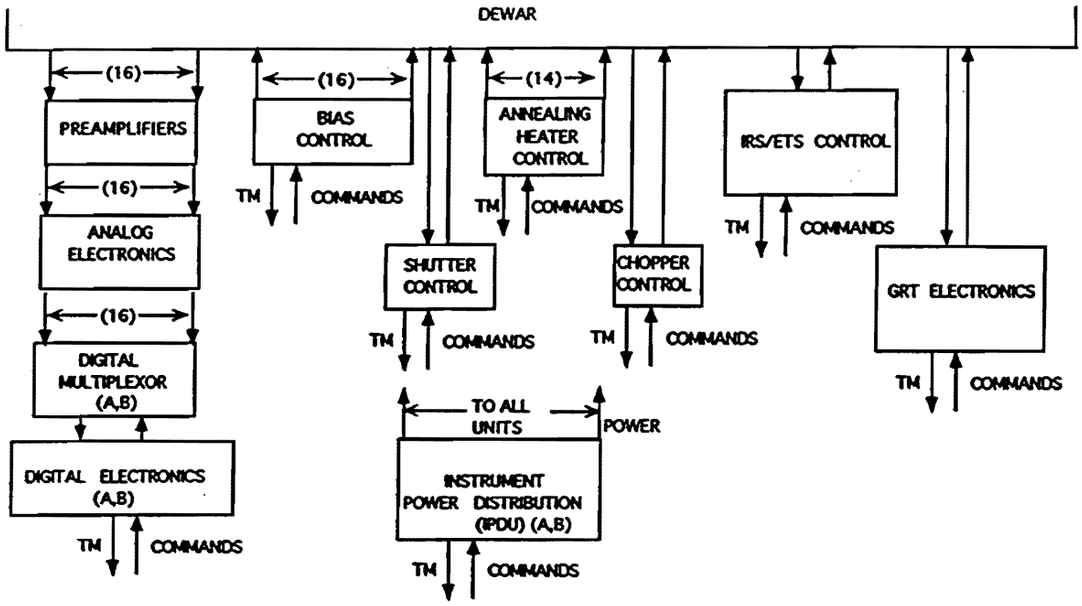

Figure 4: Electronics Block Diagram of DIRBE

rotation giving solar elongations between 64° and 124°. Combined with the pitching of the spacecraft to maintain an anti-Earth orientation, this spinning and continuous re-orientation of the spacecraft cause DIRBE to trace out a helical pattern on the sky and to map 50% of the sky each day. Precession of the orbit causes this pattern to move about one degree per day on the sky, resulting in complete sky coverage within four months, although a more uniform sampling over the sky takes six months.

TABLE 3.

Band	Along-Scan RMS Offset (arcminutes)	Cross-Scan RMS Offset (arcminutes)
1	1.1	1.8
2	-0.8	-1.0
3	-0.8	0.9
4	-2.8	-0.8
5	-0.8	-0.9
6	0.0	-0.8
7	-3.7	-0.3
8	-2.7	0.0
9	-0.9	-0.2
10	-0.8	-0.5

Reconstruction of the DIRBE aspect at each data sample is performed in two stages. A coarse attitude solution, good to about 3 arcmin rms, is determined using only the spacecraft attitude sensors. A attitude solution, accurate to 1.5 arcmin rms is then constructed using data from the DIRBE 2.2 μm detections of isolated bright stars and fitting the coarse attitude solution to the star crossings[18]. In this way, the short-term stability of the gyros is utilized and the long-term gyroscopic drifts are removed by reference to the sky.

The DIRBE instrument electronics consist of individual detector analog electronics and common electronics for collecting, digitizing, and processing the data (Figure 4). Each detector has a cryogenic source follower to reduce the output impedance. External to the dewar are transimpedance amplifiers for the photovoltaic and photoconductive detectors; high gain preamplifiers are used for the bolometric detectors.

With the exception of the detector-unique analog electronics, all of the electronic elements are redundant. These units consist of two duplicate instrument power distribution units (IPDU) and digital electronics units (DEU), designated as unit A or B. Any pair consisting of an IPDU and a DEU is valid, and the subsystem was tested on the ground in all possible configurations. Full system performance was tested only using either both A units or both B units. The IPDU conditions power from the solar arrays and from the battery, which is only used during short eclipse periods near the June solistice. The IPDU electronics also monitor analog and digital electronics and configuration functions. The IPDU also provided a command interface for control and monitoring of power functions. All power monitoring signals are inserted into the telemetry stream on a sampled basis, with no monitor signal sampled less frequently than once every major frame (32 seconds). Each DEU contains a TI9900 microprocessor, which digitizes the analog signals from each of the detectors using an analog multiplexor and a 12-bit successive approximation analog-to-digital converter.

Taking advantage of the flexibility inherent in a programmable device, the DIRBE was capable of operating in a number of modes. The majority of these modes were used for instrument diagnostics both on the ground and in orbit. Because the mission has proceeded nominally, about 90% of the time in orbit has been spent in the primary science data-gathering mode or in the mode used for calibration and stability monitoring. These modes differ only in that the instrument shutter is closed for internal calibration and offset monitoring; we describe only the primary science data-gathering mode here.

Each individual detector's electronic gain is commandable over a factor of 30. This capability was included to assure the ability to overcome our uncertainty in the sky brightness, to compensate for possible optical efficiency degradation, and to permit gain re-adjustment in the bands using InSb detectors after cryogen exhaustion. To achieve the required dynamic range at each commandable gain, each detector output is sampled at 256 Hz at the nominal commanded gain (low) and at 16 times that gain (high). The on-board microprocessor is programmed to choose the highest non-saturated gain for signal processing calculations and an output bit indicates which gain (high or low) the microprocessor chose for each detector output.

To enhance signal-to-noise ratio and reduce the bandwidth required to send data to the ground, data from four chopper cycles are synchronously demodulated with respect to the phase of the tuning fork chopper, i.e.

$$S_j = \sum_{n=0}^{31} D_{j,n} * M_{j,n}$$

where S_j is the demodulated output for a 1/8 of a second set of 32 samples, $D_{j,n}$ is the n_{th} sample from the j_{th} detector and $M_{j,n}$ is a phase sensitive mask containing only values of ± 1. M is constructed by setting $M_{j,n}$ to +1 where the sample occurs when the chopper is open to the sky and to -1 when the detector is looking at the zero reference. Each data word from a detector, S_j, sent to the ground then represents the average response of the detector to the sky over 1/8 of a second. To ensure that the wide dynamic range required by some bands could be achieved, data compression to 12 bits was performed on-board and the result was reconstructed on the ground to 0.4% or better.

Coarse phase adjustment, on a detector-by-detector basis, is provided by time shifting the sampled data relative to the demodulation mask, $M_{j,n}$ for each detector. Finer phase adjustment is made by the choice of detector sampling position in the multiplexor sequence, which is changeable by ground command. In practice, the phases were adjusted after insertion into orbit and changed little after the initial period of thermal stabilization of the dewar and spacecraft. As anticipated, significant phase changes were required for the ten InSb detectors still operating following exhaustion of cryogen on September 20, 1990. After this, temperatures again stabilized and phases have not required further change.

The DEU also provides command capability and control of the shutter and the Internal Reference Sources. For internal calibration and stability monitoring, several programmed sequences of IRS levels are used. The sequences are arranged to assure that each detector is stimulated at several levels in its dynamic range. Four programmed sequences were tailored to the four sources available in the IRS to produce similar output levels. This is required to allow for differences in optical outputs of the sources. Both a primary and a secondary reference source were used during flight. This procedure was used so that if a primary source should fail, an equally long baseline of data

would already exist for the secondary source. The primary source sequences were executed 75 times per day, while the secondary source sequences were only executed twice per day. In fact, one of the primary sources did show anomalous behavior beginning in May 1990 and a switch to the secondary source was made in July 1990. Celestial sources provide a long-term monitor of IRS stability and detector performance.

The effects of ionizing radiation on the DIRBE infrared detectors were anticipated before launch. There are both short and long term effects. When ionizing particle hits are infrequent, the interactions cause transient "events" in the detectors that can be recognized and removed from the data stream because most of them have shorter duration than the passage of a point source. Events that survive the removal scheme are eliminated later through robust averaging of the data when redundant observations are combined. When particle hit rates are very high, such as in the SAA, data are corrupted and are unsalvagable; some of the detectors, particularly the Ge:Ga photoconductors, do not return to nominal operating conditions for long periods after the high doses of ionizing radiation cease. Ground tests showed that the Ge:Ga detectors became noisier and changed responsivity when exposed to ionizing radiation doses comparable to the expected one-pass SAA exposure. The InfraRed Astronomical Satellite (*IRAS*) used an overbiasing technique to improve detector stability[19], but this technique was only modestly successful. Prelaunch tests on the DIRBE Ge:Ga detectors showed that elevating the temperature of the detectors produced a much more rapid and reliable return to stable operating conditions following ionizing radiation exposure than did overbiasing. The original design of the DIRBE detector mounting assembly included a small resistive heater attached to a thermally isolated detector mount under each DIRBE detector to control the operating temperature and to permit thermal annealing for the effects of radiation. Command sequences were developed to provide the required short term temperature elevation to achieve annealing and then return the detectors to nominal operating conditions. The heater in the 100 μm band was found to be non-functional late in testing and the annealing procedure was modified to include exposure to high intensity light from the IRS. Although not as effective as thermal annealing, this intense light significantly improved stability. Overall photometric consistency at each wavelength is better than 2%, except in the 60 and 100 μm bands where we continue to study algorithms for improving performance.

Data from all instruments and the spacecraft systems are recorded on magnetic tape on-board the spacecraft at 4 kbs. Each day the contents of the tape recorders are sent to the ground during 20 minute passes over the ground station at the Wallops Flight Facility. The DIRBE data stream consists of the synchronously demodulated detector outputs, command and instrument status verification data, particle hit rate information, and general instrument health and safety information.

5. INSTRUMENT AND SYSTEM TESTING

In addition to the testing of spacecraft systems such as solar panel and Earth shield deployment, dewar cover ejection mechanism, and the spacecraft subsystems, the three COBE instruments were extensively tested both individually and as a fully-integrated system. The DIRBE sensitivity, noise characteristics, optical properties, beam profile, spectral response function, and polarization were tested and verified. Performance discrepancies that were uncovered in early tests at the subsystem level resulted in actions as drastic as redesign and as minor as retest. Many problems were solved procedurally due to the highly flexible design of the DIRBE control electronics. System level tests, in conjunction with the FIRAS which shared the dewar volume, were carried out to verify that both cryogenic experiments could operate at the specified levels of performance when they were operated simultaneously. Finally, all three experiments and all required spacecraft systems were operated simultaneously to verify performance.

6. IN-FLIGHT PERFORMANCE

The dewar cover was ejected three days after launch. Useful science data were obtained that same day. FIRAS experienced problems with its Mirror Transport Mechanism (MTM) during passage through the SAA, which caused excess power to be dissipated in the dewar. Circuitry to prevent high power being dissipated in the dewar stopped the MTM after a short time, but thermal disruptions with long settling times still occurred. After several weeks, procedures were changed to disable the MTM prior to entry into the SAA and re-enable it upon exit. After this change was implemented, dewar temperatures became quite stable and both FIRAS and DIRBE functioned smoothly.

No significant thermal changes, either in the dewar or in the electronics boxes occurred until the spacecraft started to experience eclipses. This eclipsing had been anticipated and stability monitoring procedures permitted tracking of the

small gain shifts induced by the thermal changes in the electronics. After the eclipse period, systems again stabilized. Instrument optical performance was tested in orbit using point source passages for beam profile verification. Stray light tests were done using the Moon. Patches of sky were observed when the Moon was at various angles to the patches and an exclusion zone for the Moon was established by requiring no change in the patch surface brightness. Data taken within 10 degrees of the Moon are excluded from the data products. The preliminary absolute calibration is based on adopting calibrators for each band: Sirius for the 1.2-12 μm band; the planetary nebula NGC 7027 for 25 μm; Uranus for 60 and 100 μm; and Jupiter for the 140 and 240 μm bands.

Upon exhaustion of the cryogen supply, the interior of the dewar warmed to about 50 K over a period of several months. Although reduced in sensitivity by a factor of about three, due largely to changes in the detector's load resistors, all of the InSb detectors used for the 1-5 μm wavelength range continue to operate. The data are useful for monitoring the interplanetary dust signal in both scattered light (1-3.5 μm) and thermal emission (5 μm).

7. CONCLUSIONS

The DIRBE has been carefully designed, built, and tested to observe the remnants of the first luminous objects in the universe. It has been used to map the entire sky from 1-240 μm . The high quality, extensive DIRBE measurements provide a rich multi-wavelength data set for studying many astrophysical subjects, and many interesting preliminary results have already been presented[14,17,20–24].

An initial COBE data product release in mid-1993 includes Galactic plane maps in all 10 DIRBE bands. Full sky coverage maps from all COBE instruments, with the best calibration and all known instrumental and spacecraft effects removed, are planned for release in mid-1994. These data will provide a comprehensive database for studying not only the CMB, but for Galactic and solar system astronomy and, perhaps, allow us to extract and determine the character of the elusive CIB.

8. ACKNOWLEDGMENTS

The National Aeronautics and Space Administration/Goddard Space Flight Center (NASA/GSFC) is responsible for the design, development, and operation of the Cosmic Background Explorer (COBE), under the scientific guidance of the COBE Science Working Group. GSFC is also responsible for the software development and the final processing of the mission data. In addition to the authors of this paper, many people have made essential contributions to the success of COBE in all its stages, from conception and approval through hardware and software development, launch, and flight operations. To all these people, in government agencies, universities, and industry, the authors extend their thanks and gratitude. In particular, we thank the large number of people at the GSFC who brought this challenging in-house project to fruition.

References

[1] Partridge, R. B. and Peebles, P. J. E., 1967,*ApJ*, **148**, 377

[2] Low, F. J. & Tucker, W. H., 1968 *Phys.Rev.Lett.*, **22**, 1538

[3] Fabbri, R. and Melchiorri, F., 1979, *Astr. and Ap.*, **78**, 376

[4] Bond, J. R., Carr, B. J. and Hogan, C. J., 1986, *ApJ*, **306**, 428

[5] Bond, J. R., Carr, B. J., and Hogan, C. J., 1991, *ApJ*, **367**, 420

[6] Beichman, C. A., and Helou, G., 1991, *ApJ Lett.*, **370**, L1

[7] Evans, D. C., 1983, *SPIE*, **384**, 82

[8] Matsumoto, T. et al.,1988, *ApJ*, **329**, 567

[9] Noda, M. et al,1992, *ApJ*, **391**, 456

[10] Boggess, N. et al., 1992, *ApJ*, **397**, 420

[11] Mather, J. C., 1993, This conference

[12] Mather, J. C. et al., 1990, *ApJ Lett.*, **354**, L37

[13] Smoot, G. F. et al., 1992, *ApJ Lett.*, **396**, L1

[14] Hauser, M. G. et al., 1991, AIP Conf. Proc. 222,*After the First Three Minutes*, ed. S. S. Holt, C. L. Bennett, & V. Trimble, New York:AIP, 161

[15] Bromberg, B. W. and Croft, J., 1985, *Adv. Astron. Sci.*, **57**, 217

[16] Magner, T. J.,1987, *Opt.Eng.*, **26**, 264

[17] Berriman, G. B., et al., 1993, *Back to the Galaxy*, eds. S. S. Holt & F. Verter, (New York: AIP Conf. Proc), to be published.

[18] Kumar, V. K., Freedman, I., Wright, E. L., and Patt, F. S., "COBE Ground Segment Attitude Determination", Proc. of a NASA Sponsored by NASA's Flight Dynamics Division, May 5-7, 1992, Greenbelt, MD

[19] Neugebauer, G. et al. 1984, *ApJ Lett.*, **278**, L1

[20] Hauser, M. G., 1993,*Back to the Galaxy*, eds. S. S. Holt & F. Verter, (New York: AIP Conf. Proc), to be published.

[21] Weiland, J. L., et al., 1993, *Back to the Galaxy*, eds. S. S. Holt & F. Verter, (New York: AIP Conf. Proc), to be published.

[22] Freudenreich, H. T., et al., 1993, *Back to the Galaxy*, eds. S. S. Holt & F. Verter, (New York: AIP Conf. Proc), to be published.

[23] Arendt, R. G., et al., 1993, *Back to the Galaxy*, eds. S. S. Holt & F. Verter, (New York: AIP Conf. Proc), to be published.

[24] Sodroski, T. J., et al., 1993, *Back to the Galaxy*, eds. S. S. Holt & F. Verter, (New York: AIP Conf. Proc), to be published.