Retain 62,701

FERMILAB

JUL 1 1985

LIBRARY

CMU-DOE-ER-03244-111R

CMU-DOE/ER/03244-111

STRANGE PARTICLE PRODUCTION IN $\bar{P}$ P ANNIHILATION PROCESSES

Peter D. Barnes

Department of Physics

Carnegie Mellon University

Pittsburgh, Pennsylvania

ROUTE TO

NAME	LOCATION

RETURN TO FERMILAB LIBRARY

Invited talk, delivered at
The Conference on Antinucleon and Nucleon-
Nucleus Interactions
Telluride, Colorado; March 18-21, 1985

STRANGE PARTICLE PRODUCTION IN $\bar{P}$ P ANNIHILATION PROCESSES

Peter D. Barnes

Carnegie Mellon University

Pittsburgh, Pennsylvania

PS 185 Collaboration:

P.D. Barnes[a], R. Besold[c], P. Birien[f], B.E. Bonner[e], W. Breunlich[i], W. Dutty[d], R.A. Eisenstein[g], G. Ericsson[h], W. Eyrich[c], R. Frankenberg[c], G. Franklin[a], J. Franz[d], N. Hamann[d], D. Hertzog[a], A. Hofmann[c], T. Johansson[h], K. Kilian[b], C. Maher[a], R. Müller[c], H. Ortner[c], P. Pawlek[i], B. Quinn[a], E. Rössle[d], H. Schledermann[d], H. Schmitt[d], J. Seydoux[a], J. Szymanski[a], P. Woldt[c]

Carnegie-Mellon Univ.[a]-CERN[b]-Erlangen-Nürnberg Univ.[c] Frieburg Univ.[d],-Los Alamos National Lab.[e]-Saclay CEN DPhN[f]-Univ of Illinois[g]-Uppsala Univ.[h]-ÖAW-Wien[i]

Nucleon - Antinucleon annihilation is inherently a short range ($\lesssim$1 f.) process involving a spatial overlap of the two hadrons. This feature has stimulated much theoretical interest in this process as a testing ground for models of the underlying quark degrees of freedom. Microscopic models have been proposed to describe annihilation into both two and three meson final states, in both strange and nonstrange channels, and into nonmesonic two hyperon final states. I will review briefly, in section I, the main issues in the analysis of mesonic final states. In section II a new investigation at LEAR of $\bar{\Lambda}\Lambda$ production in $\bar{P}$ P collisions near threshold will be discussed. Finally in section III a proposed study of the reaction $\bar{P}$ P $\rightarrow K_S K_S$ will be described in the context of a search for the $\xi(2220)$ resonance.

I. MICROSCOPIC MODELS OF MESONIC ANNIHILATION CHANNELS.

A number of phenomenological models for $\bar{N}$ N annihilation have appeared in the literature in recent years. Although rather different in their dependence on spin, isospin, and energy, they are generally successful in parameterizing the gross features of the available data. In addition extensive progress has been made in developing microscopic models that are motivated by quantum chromodynamics (QCD). In the latter case annihilation is described in terms of confined quarks and gluons including Q $\bar{Q}$ annihilation or rearrangement as shown in Figs. 1 and 2. The predictions of these models can be compared with the available experimental results for N $\bar{N}$ interactions namely, i) total

annihilation cross-sections, ii) branching ratios into specific multi-meson production channels, iii) hyperon production cross sections and iv) spin observables where available.

As new data from LEAR is combined with earlier measurements some of the main physics issues can be identified and are listed below.

A) What are the main processes that contribute to σ_{ANN}? The three meson decay mode, $\bar{N}N \rightarrow M_1M_2M_3$ as described by quark rearrangement (Fig. 1a) which was introduced by Rubenstein and Stern (1966) (1) and refined by subsequent authors (2) is certainly a large component of the total annihilation cross section. Recently Green and Niskanen (3) have treated both S and P wave type meson production allowing both for mesons of finite width and for Δ formation. With quark rearrangement alone they are able to reproduce 50-70% of σ_{ANN} ($\bar{P}$ P) in the lab momentum range 0-1 GeV/c (Fig. 3). Nevertheless the contribution of $\bar{Q}$ Q annihilation and production, Fig. 1b, may still make significant contributions to σ_{ANN}.

B) What is the proper description of $\bar{Q}$ Q annihilation and production? This is most conveniently studied in two meson final state channels (Figs. 1c and 1d) and in processes that lead to strange quark production, $\bar{s}$ s (eg. $\bar{K}K$, $\bar{K}K\pi$, $\bar{\Lambda}\Lambda$, etc.). Models which describe the effective $\bar{Q}$ Q annihilation vertex as flavor independent and possessing the quantum numbers of the vacuum ($^{13}P_0$ in L S coupling) or alternatively as having the quantum numbers of the gluon ($^{13}S_1$ in the one gluon exchange description) have been tested by a number of authors (4) with some success.

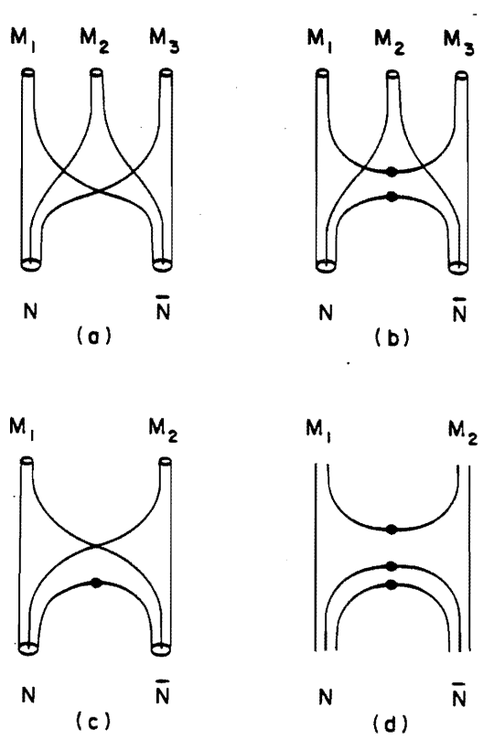

Fig.1 Quark rearrangement and annihilation models for mesonic channels.

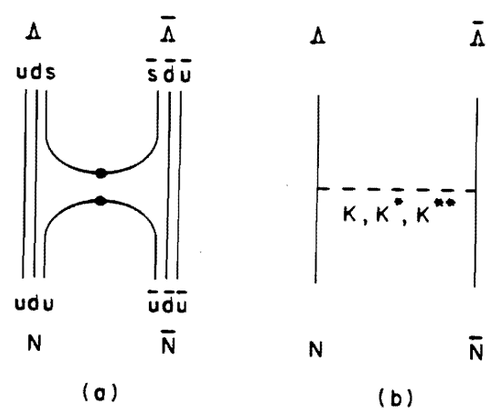

Fig.2 Quark annihilation and t channel meson exchange models of $\bar{\Lambda}\Lambda$ production.

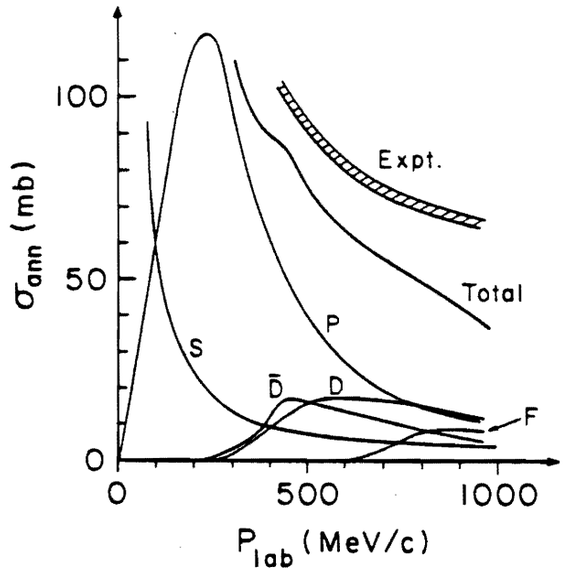

Fig.3 Quark rearrangement calculation (3) of σ_{ANN}.

C) Why are certain decay channels suppressed? Specific examples of this have been used to test various models (see for example Dover (5), Niskanen and Myhrer (6), and Niskanen (7).

D) What is the role of the virtual pion cloud outside of the quark confinement region in pionic final states? See, for example, Green (2).

E) Can the nonmesonic final states, for example hyperon - antihyperon production, be treated in a way self-consistent with the mesonic annihilation processes?

There has been extensive work reported on most of these issues and strange quark production has been especially useful in identifying some of the underlying mechanisms. We turn now to two specific strange two body final states for which measurements are in progress or under discussion.

II) HYPERON PRODUCTION IN $\bar{P}$ P SCATTERING

The reaction, $\bar{P} + P \rightarrow \bar{\Lambda} + \Lambda$ provides an especially attractive process in which to study $\bar{N}N$ annihilation mechanisms (Fig. 2). The threshold is at 1435 Mev/c $\bar{P}$ momentum (Lab) with a resulting momentum transfer of about 3 f^{-1}. The total cross section, $\sigma_{\Lambda\bar{\Lambda}}$, which has been studied (8) up to about 7 GeV/c (Fig. 4), rises to 120 μb, and is 0.1% of the total annihilation cross section. In addition to measurements of total and differential cross sections, the selfanalyzing character of the Λ and $\bar{\Lambda}$ weak decay provides information on the spin variables in the final state. Since the hyperon is constructed from a spin one half s quark coupled to a zero spin u-d quark pair, information on the Λ ($\bar{\Lambda}$) polarization and the $\Lambda\bar{\Lambda}$ spin correlation is directly related to the spin states of the $\bar{s}$-s quark pair produced in the final state. The opportunity to make a precise, high statistics study of both the cross section and spin variables of this reaction near threshold at LEAR makes this process an especially good testing ground of $\bar{N}$ N annihilation models.

The PS 185 collaboration (9) is studying this reaction near threshold using the detectors displayed in Fig. 5. A small (0.5 mm

diameter) but intense antiproton beam from LEAR (10^5 $\bar{P}$/sec) is incident on a 2.5 mm diameter target cylinder [1] of CH_2 which is surrounded by a cylinderical anti-coincidence scintillator box. In-flight annihilation of the $\bar{P}$'s produces recoiling neutral $\bar{\Lambda}\Lambda$ pairs which travel a mean distance of 6 cm into the chamber stack. About 40% of the time the hyperons decay into four charged particles which leave

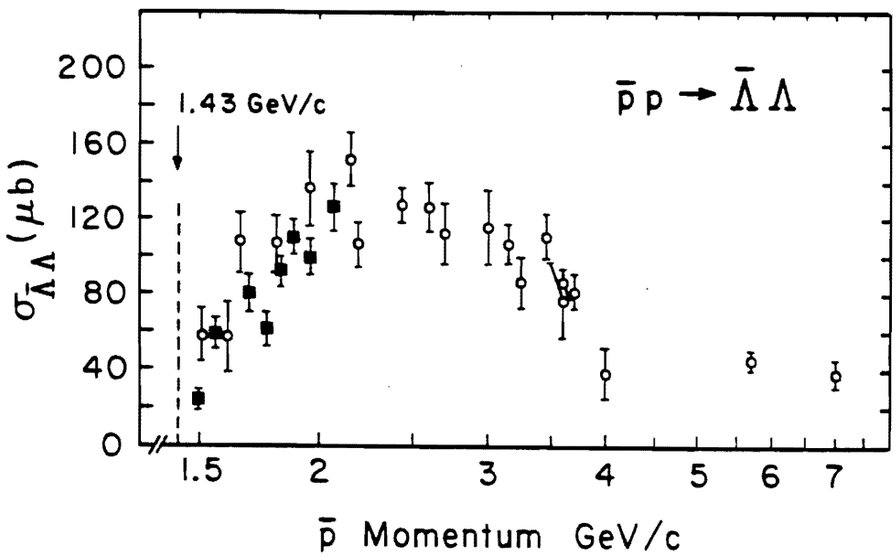

Fig.4 Total cross section for the reaction $\bar{P}$ P → $\bar{\Lambda}\Lambda$

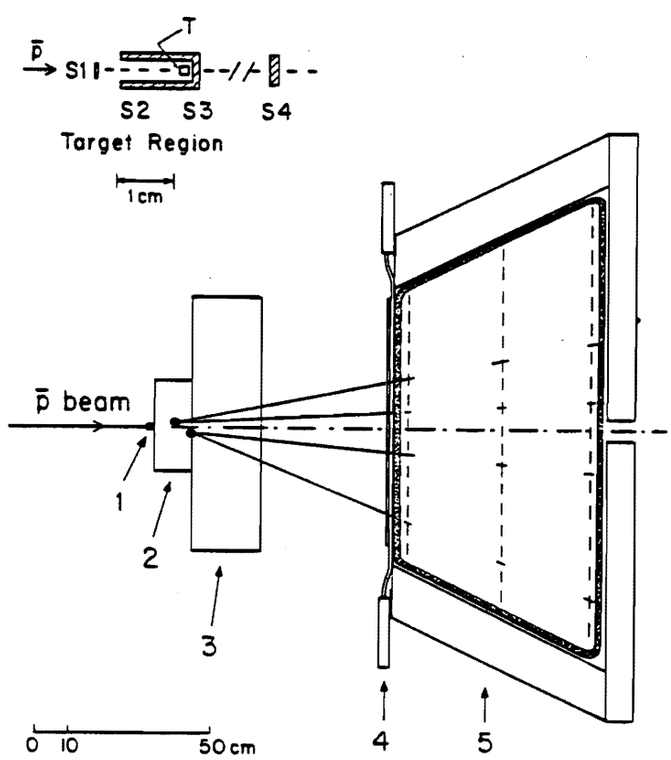

Fig.5 Track imaging detector (9) for threshold studies of hyperon production at LEAR (PS-185).

tracks in a 10 plane proportional wire chamber stack [2] and a thirteen plane drift chamber stack [3]. Most of the momentum is carried forward by the secondary proton and antiproton which are detected in a scintillator trigger hodoscope [4] and finally deflected in a 1 kilogauss magnetic solenoid [5] for baryon number identification. Charged mesonic annihilation events are rejected in the neutral trigger which takes advantage of the charged-neutral-charged character of the $\bar{\Lambda}\Lambda$ events. Complete reconstruction and kinematic fitting of four prong events has demonstrated successful high rate operation of the apparatus, good charge identification with the solenoid, and good rejection of background events due to the carbon in the target.

An investigation of the shape of the total cross section as a function of momentum near threshold was begun in May 1984 with measurements at $\bar{P}$ momenta of 1476 and 1508 MeV/c. We find a preliminary cross section ratio:

$$R = \frac{\sigma_{\bar{\Lambda}\Lambda}\ (1508\ \mathrm{MeV/c})}{\sigma_{\bar{\Lambda}\Lambda}\ (1476\ \mathrm{MeV/c})} = 2.01 \pm 0.17.$$

A simple model which ignores initial and final state distortions suggests that the $\sigma_{\bar{\Lambda}\Lambda}$ would grow as $\sigma \propto \epsilon^{\ell + 1/2}$ where ϵ = excess energy above threshold and ℓ = orbital momentum in the final state. This model predicts R = 1.32 for pure $\ell = 0$ and R = 2.31 for pure $\ell = 1$ and thus suggests that more than S wave is contributing at these momenta. Additional measurements closer to threshold are planned for the summer, 1985.

Preliminary results for the C.M. differential cross sections at these two momenta are shown in Fig. 6. The cross section is shown as a

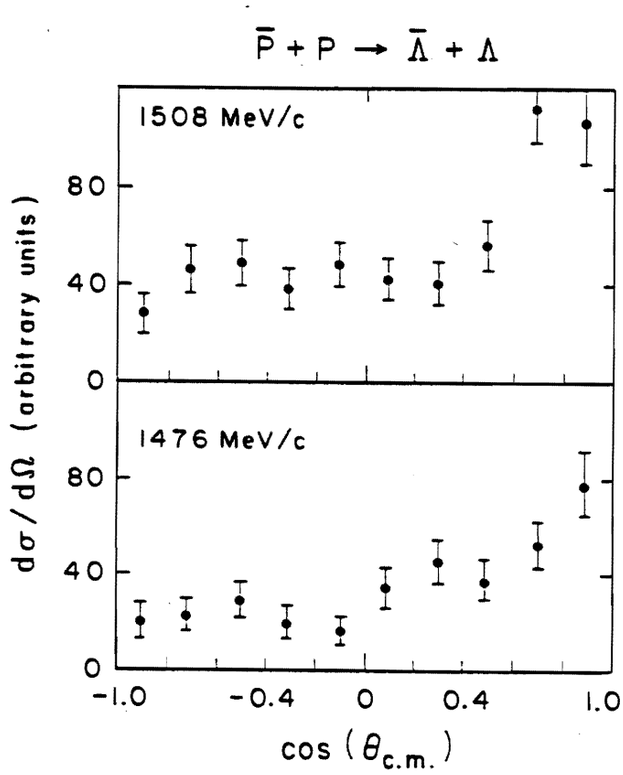

Fig.6 Differential cross sections (C.M.) for $\bar{\Lambda}\Lambda$ production at 1476 and 1508 MeV/c obtained in PS-185 (9).

function of cos (Θ) where (Θ) is the C.M. angle between the incident $\bar{P}$ and the outgoing $\bar{\Lambda}$. Pure S wave production would give a flat angular distribution. We observe, however, a rise in cross section for $\bar{\Lambda}$'s in the forward direction at both incident momenta. This had been suggested by earlier measurements by Jayet (10) based on 18 events at this momentum. Although limited by statistics, this earlier experiment is consistent with the current data as shown in Fig. 7.

Theoretical analysis of this reaction dates back to the 1962 work of Sopkovich and has, for the most part, treated the interaction as a t channel exchange of K mesons (see Fig. 2). In the most detailed treatment (12), reported by F. Tabakin at this conference, the exchange of K, K*, and K** mesons with J^P and mass of 0^-, 494 MeV; 1^-, 890 MeV; and 2^+, 1430 MeV; were included. The predicted cross sections were found to be sensitive to interference of the K* and K** exchange as well as to the K N Λ coupling constants and both initial and final state interactions. These have been constrained to fit data at 1.85, 3.6, and 6.0 GeV/c. Fig. 7 we compare the predictions of this model with our LEAR measurements at 1508 MeV/c. Although the general trend is correct, the rise at forward angles is overestimated by a factor of two.

In the $\Lambda(\bar{\Lambda})$ C.M., the direction of the recoil nucleon momentum vector, $\vec{k}$, resulting from the weak decay of the $\Lambda(\bar{\Lambda})$ is strongly correlated with the direction of the $\Lambda(\bar{\Lambda})$ polarization vector, $\vec{P}$. The intensity distribution is known to be:

$$I(\beta) = I_0 \, [1 + \alpha \, \hat{k} \cdot \vec{P}]$$

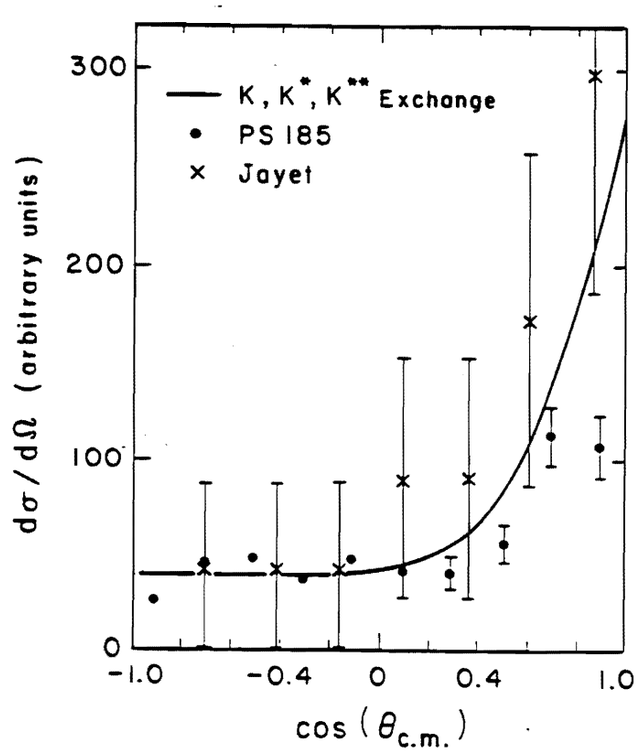

Fig.7 Comparison of the 1508 MeV/c data to the measurement of Jayet (10) and the t channel mesonic exchange model (12) predictions (solid line).

where β is the angle between the unit vector $\hat{k}$ and $\vec{P}$, and $\alpha_\Lambda = -\alpha_{\bar{\Lambda}} = 0.65 \pm 0.01$. The polarization of the Λ and the spin correlation coefficients, C_{ij}, can be expressed in terms of the average value of the measured cos (β)'s as:

$$P_{\Lambda i} = \frac{3}{\alpha_\Lambda} \langle \cos \beta_{\Lambda i} \rangle$$

($\hat{i}$ perpendicular to reaction plane) and

$$C_{ij} = \frac{3}{\alpha_\Lambda} \frac{3}{\alpha_{\bar{\Lambda}}} \langle \cos \beta_{\Lambda i} \cos \beta_{\bar{\Lambda} j} \rangle$$

for projections along the i and j coordinate axes. Analysis of the current data is still in progress. The predicted $\Lambda(\bar{\Lambda})$ polarization (12), $P(\theta)$ grows as large as -0.4 for events where the $\bar{\Lambda}$ is thrown forward as shown in Fig. 8. In addition we (13) have used the predicted spin correlation coefficients (12) to calculate the Single Fraction, S.

$$S = 1/4\ [1 - \langle \sigma_\Lambda \cdot \sigma_{\bar{\Lambda}} \rangle]$$

$$= 1/4\ [1 - C_{xx} - C_{yy} - C_{zz}]$$

We find, Fig. 9a, that at all angles the prediction at 1.5 GeV/c favors a pure triplet $\bar{\Lambda}\Lambda$ final state. This estimate is compared to earlier data in Fig. 9b for which the average Singlet Fraction has been estimated (9) in the momentum range 2-6 GeV/c. The data seems to indicate a pure triplet state although many points are in an unphysical region. The high statistics measurements in progress at LEAR PS-185 should clarify this issue.

In summary, this experiment, which produces both cross section and spin variable information, provides a rather complete test of models of nonmesonic annihilation processes. At the present time t channel meson exchange models are a) sensitive to the choice of many unknown parameters and b) require the exchange of rather massive mesons (1430 MeV). The latter feature suggests that these models may not be appropriate for this short range process except as a phenominological guide. We can look forward, however, to the application of the quark annihilation and rearrangement microscopic models developed for mesonic final states to this hyperon production reaction.

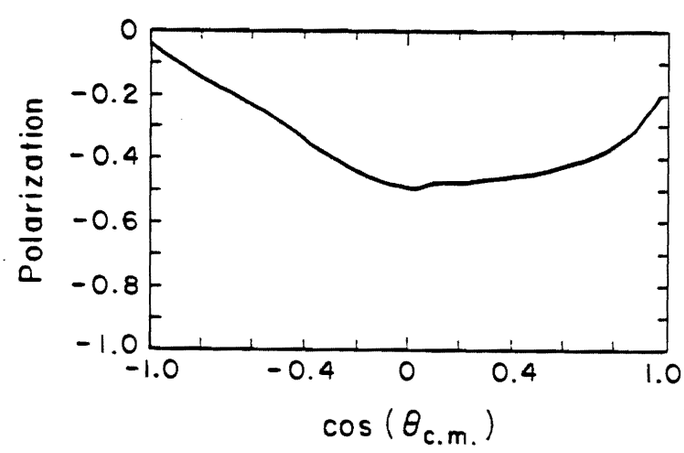

Fig.8 Predicted polarization (12) of the $\bar{\Lambda}$ verses cos (θ) in C.M.

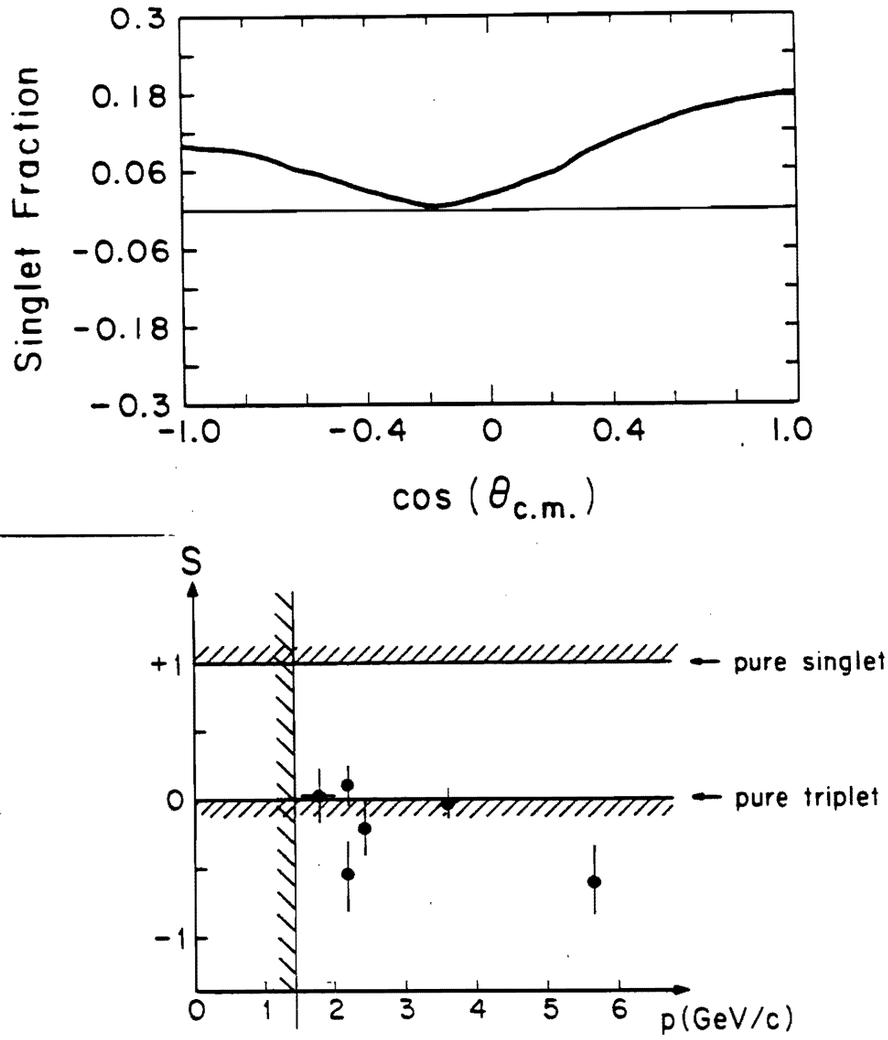

Fig.9 Comparison of a) the estimated Singlet Fraction, S, at threshold (see text) with b) the available data at several $\bar{P}$ momenta (9).

III. SEARCH FOR THE $\xi(2220)$ IN $\bar{P}$ P ANNIHILATION

At the Brighton Conference of 1983, the MARK III group at SLAC reported (14) evidence for a new narrow resonance, the $\xi(2220)$, observed in the radiative decay of the J/ψ (see Fig. 10):

$$J/\psi \rightarrow \gamma + \xi, \ \xi \rightarrow K^+ K^-, \ K_S K_S$$

The reported mass, width, and decay branches, were: $m = 2.218 \pm 3 \pm 10$ MeV/c^2, $\Gamma_\xi < 40$ MeV/c^2 (95% C.L.) and $B(J/\psi \rightarrow \gamma\xi) \cdot B(\xi \rightarrow K\bar{K}) = 12 \times 10^{-5}$. Although seen in two different decay modes and in runs from two different years, not all data supports the existence of the resonance and confirming evidence is sought from MARK III measurements now in progress. Meanwhile, there has been extensive discussion as to the origin of this resonance. Some possibilities suggested are: a light Higgs scalar boson, a glueball, a L = 3 $s\bar{s}$ meson, a f' (1515) Regge recurrence, an exotic $s\bar{s}s\bar{s}$ state, and a cusp effect resulting from the opening of the $\bar{\Lambda}\Lambda$ threshold.

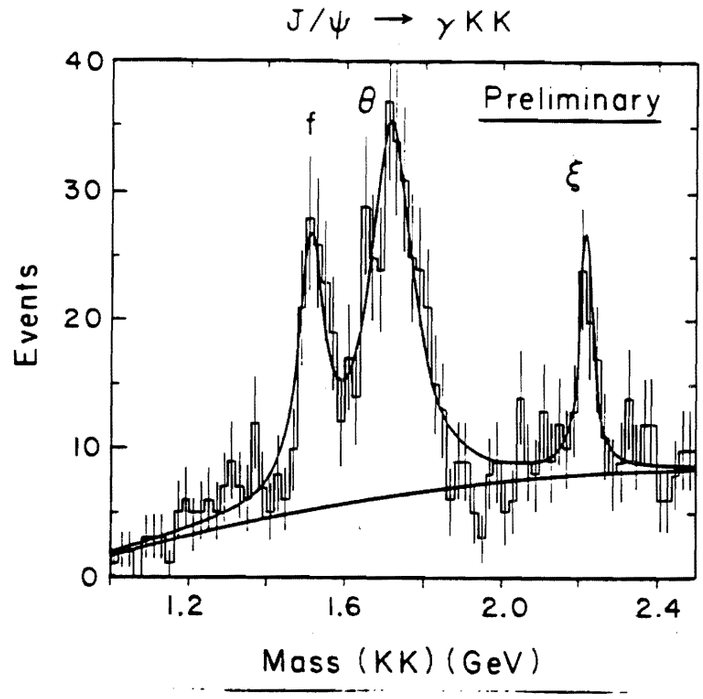

Fig.10 Mass spectrum for $J/\psi \to \gamma$ K K measured at the MARK III/SLAC detector (14).

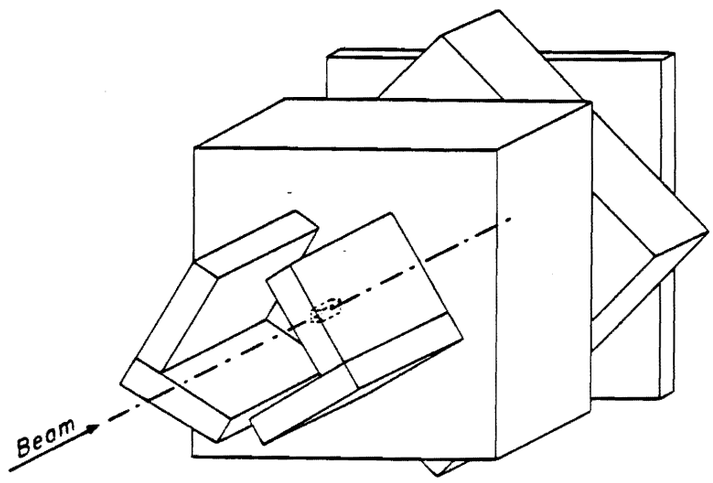

Fig.11 Modified PS-185 imaging detector to observe $\bar{P}\,P \to K_S\,K_S \to (\pi^+\pi^-)\ (\pi^+\pi^-)$.

In the PS 185 collaboration (9, 15) we have been exploring the possibility of forming this system in the process: $\bar{P}\,P \to \xi \to K_S + K_S \to (\pi^+\pi^-)\ (\pi^+\pi^-)$. In terms of signal/noise this would have advantages over searches in the K^+K^- and $\Phi\Phi$ decay channels due to the nonresonant background. The ξ production yield in the $\bar{P}\,P$ channel can not be known in advance but the high intensity and high purity of the LEAR beam combined with the PS 185 detector would permit a measurement with a mass resolution of < 1 MeV. With the addition of new wire chamber stacks around the target, (Fig. 11) the full C.M. angular range of the ξ's decay would be covered, permitting a good measurement of its spin. Thus this investigation at LEAR would be a quite important measurement if there is confirming evidence from SLAC on the existence of the $\xi(2220)$.

IV. SUMMARY

While it has not been possible to describe all the activity in $\bar{P}$ P annihilation studies, these several diverse examples already indicate the prospects for better understanding of the annihilation mechanisms from new data and the role that $\bar{s}$ s quark production could play in these studies.

References

1. H. Rubinstein and H. Stern, Phys. Lett. 21 (1966) 447.
2. M. Maruyama and T. Ueda, Nuc. Phy. A364 (1981) 297; Phys. Lett 124B (1983) 121; S. Furui, A. Faessler, and S. Khadkikar, Nuc. Phy. A424 (1984) 495; J. Niskanen, V. Kuikka, and A. Green, Univ. of Helsinki preprint HU-TFT-85-6, 1985.
3. A.M. Green and J.A. Niskanen, Nuc. Phy. A430 (1984) 605, A412 (1984)448.
4. S. Furui, A. Faessler, and S. Khadkikar, Nuc. Phy. A424 (1984) 495; A. Faessler, G. Lubeck and K. Shimizu, Phy. Rev. D26 (1982) 3280; H. Genz, Phys. Rev. D28 (1983) 1094; A. Green et. al., Phys. Lett. 139B (1984) 15; R. Freedman et al., Phys. Rev. C23 (1981) 1103; M. Alberg et. al., Phy. Rev. D27 (1983) 536; A. Faessler, et al., Phys. Rev. D26 (1982) 3280; R. Tegen et. al., Univ. South Carolina preprint, 1984; M. Kohno and W. Weise, Regensburg preprint TPR-84-12.
5. C. Dover and P. Fishbane, Nuc. Phy. B244 (1984) 349.
6. J. Niskanen and F. Myhrer, Univ. of Helsinki preprint HU-TFT-85-4, 1985
7. J. Niskanen, Univ. of Helsinki preprint HU-TFT-85-3, 1985.
8. V. Flaminio et. al., CERN Pub. CERN-HERA-84-01 (1984).
9. CERN/PSCC/81-69; "Study of Threshold Production of $\bar{p}p\to\bar{\Lambda}\Lambda$ at LEAR", PS-185 Collaboration, P.D. Barnes, R. Besold, P. Birien, B.E. Bonner, W. Bruenlich, W. Dutty, R.A. Eisenstein, G. Ericsson, W.Eyrich, R. Frankenberg, G. Franklin, J. Franz, N. Hamann, D. Hertzog, A. Hofmann, T. Johansson, K. Kilian, C. Maher, R. Müller, G. Nicklas, H. Ortner, P. Pawlek, S.M. Polikanov, B. Quinn, E. Rössle, H. Schledermann, H. Schmitt, W. Wharton, P. Woldt.
10. B. Jayet et. al., Nuovo Cimento 45A (1978) 371.
11. N. Sopkovich, Ph.D. Thesis, Carnegie-Mellon Univ. (1962) and Nuovo Cimento 28 (1962) 186.
12. F. Tabakin and R.A. Eisenstein, Univ. of Illinois preprint P/85/1/12, 1985.
13. P.D. Barnes, G. Diebold, and C. Maher, private communication.
14. K.F. Einsweiler, Ph.D. Thesis, Stanford Univ. (1984), SLAC- 272; ibid. Proc. of the International Europhysics Conf. on High Energy Physics, Brighton, J.K., July, 1983; D. Shiltin, Proceedings of the 1983 International Symposium on Lepton and Photon Interactions at High Energies, Cornell Univ. p. 746.
15. D.W. Hertzog, Proceedings of the Third LEAR Workshop, Tignes, France, 1985, to be published.