BNL-34518 - 11th - Ed
(Rev. 12/94)
Eleventh Edition
Informal Report

BROOKHAVEN NATIONAL LABORATORY
Upton, Long Island
New York 11973-5000

FERMILAB
NOV 1 1995
LIBRARY

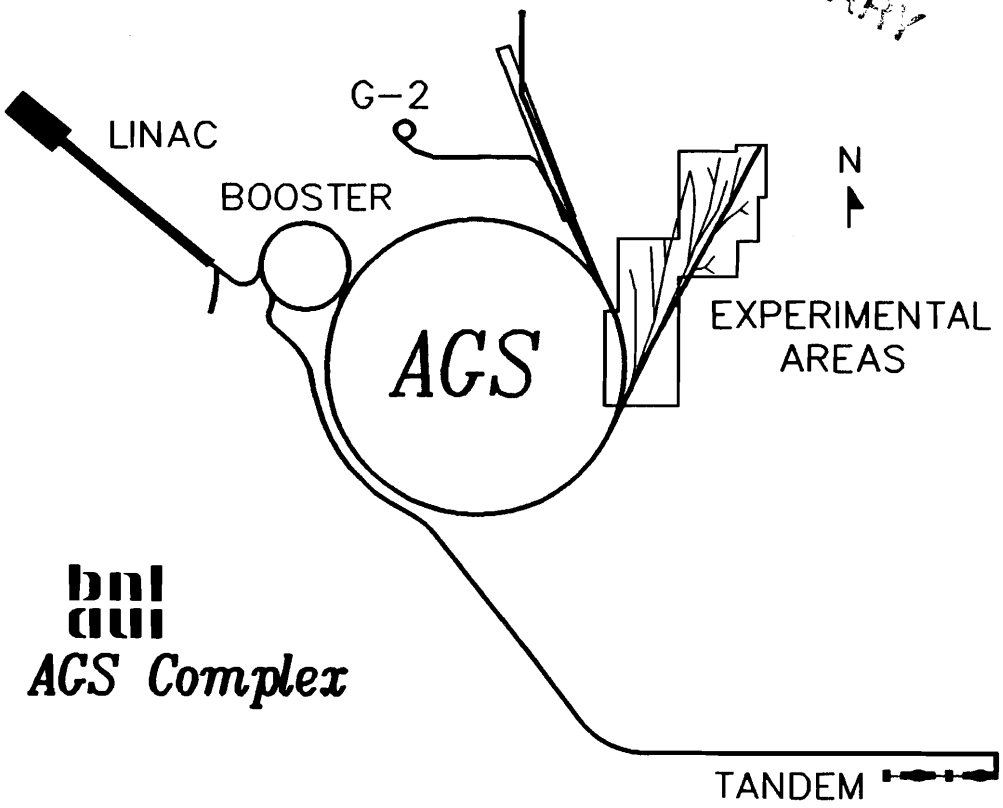

bnl

The AGS Complex

AGS EXPERIMENTS: 1992 • 1993 • 1994

BNL 34518 • AGS EXPERIMENTS: 1992 • 1993 • 1994

AGS Experiments - 1992, 1993, and 1994

This report contains:

Page:

1. • FY 1994 AGS Schedule as Run

2. • FY 1995-96 AGS Schedule (working copy)

3. • AGS Experiments ≥ FY 1994 (as of 30 March 1994)

4. • AGS Beams 1994

5. • AGS Experimental Area FY 1992 Physics Program

6. • AGS Experimental Area FY 1993 Physics Program

7. • AGS Experimental Area FY 1994 Physics Program

8. • AGS Experimental Area FY 1995 Physics Program (proposed)

9. • A listing of experiments by number

15. • Two-page summaries of each experiment begin here, also ordered by number

119. • Listing of publications of AGS experiments begins here

163. • Listing of AGS experimenters begins here

This is the *eleventh edition*. Please forward suggestions and changes for future editions to:

Division Head, EP&S Division
Brookhaven National Laboratory
Building 911B
Upton, New York 110973-5000
U. S. A.

THE CUTOFF DATE FOR APPROVED EXPERIMENTS INCLUDED IN THIS EDITION IS JANUARY 1, 1995.

AGS Schedule– As Run, FY1994

By: T. Roser/K.Gardner Date: 2–14–95

Parasitic

Running

FY94

Beam	Exp #	Experiment	Hours
		AGS Startup	
		AGS Booster Studies	
A1	852	Chung/Dzierba	2152/2500
A1	891	Platner	184/1000
A2	865	Zeller	617/4500
A3	878	Crawford	986/807
A3	864	Sandweiss	560/2400
B1	892	Gould (test)	8/600
B1	866	Chasman/Hamagaki	1524/2600
B2		Test Beam	949
B5	871	Molzon/Ritchie/Wojcicki	1964/3600
C1	850	Carroll/Heppelmann	2253/2500
C4	787	Littenberg/Smith/Bryman	7574/10500
C5	877	Braun–Munzinger	1795/1600
C6	887	Sawafta/Hicks	848/800
C8	890	Nefkens/Chrien/Peng	579/1519
D6	836	Franklin/Barnes	932/700
D6	885	May/Franklin/Davis	67/1000
D6	886	Imai/Diebold/Pile	937/683
D6	899	Peterson	28/24
AGS	880	Roser/Lee	144/320
		Small Heavy Ion Experiments	
B1	862	Hill	42/36
B1	863	Otterland/Wilkes	30/25
B1	875	Jain	28/2
B1	883	Heinrich	29/10
B1	882A	Price	23/50
B1	893	Thompson	2/1
B1	882C	Price	33/50
B2	APT	Ward/Zucker	0/24
C5	NRL	Adams	8
C5	882B	Price	23/50
A	882D	Price	25/50
A	903	Finnemore/Snead	1/24
		BLIP	

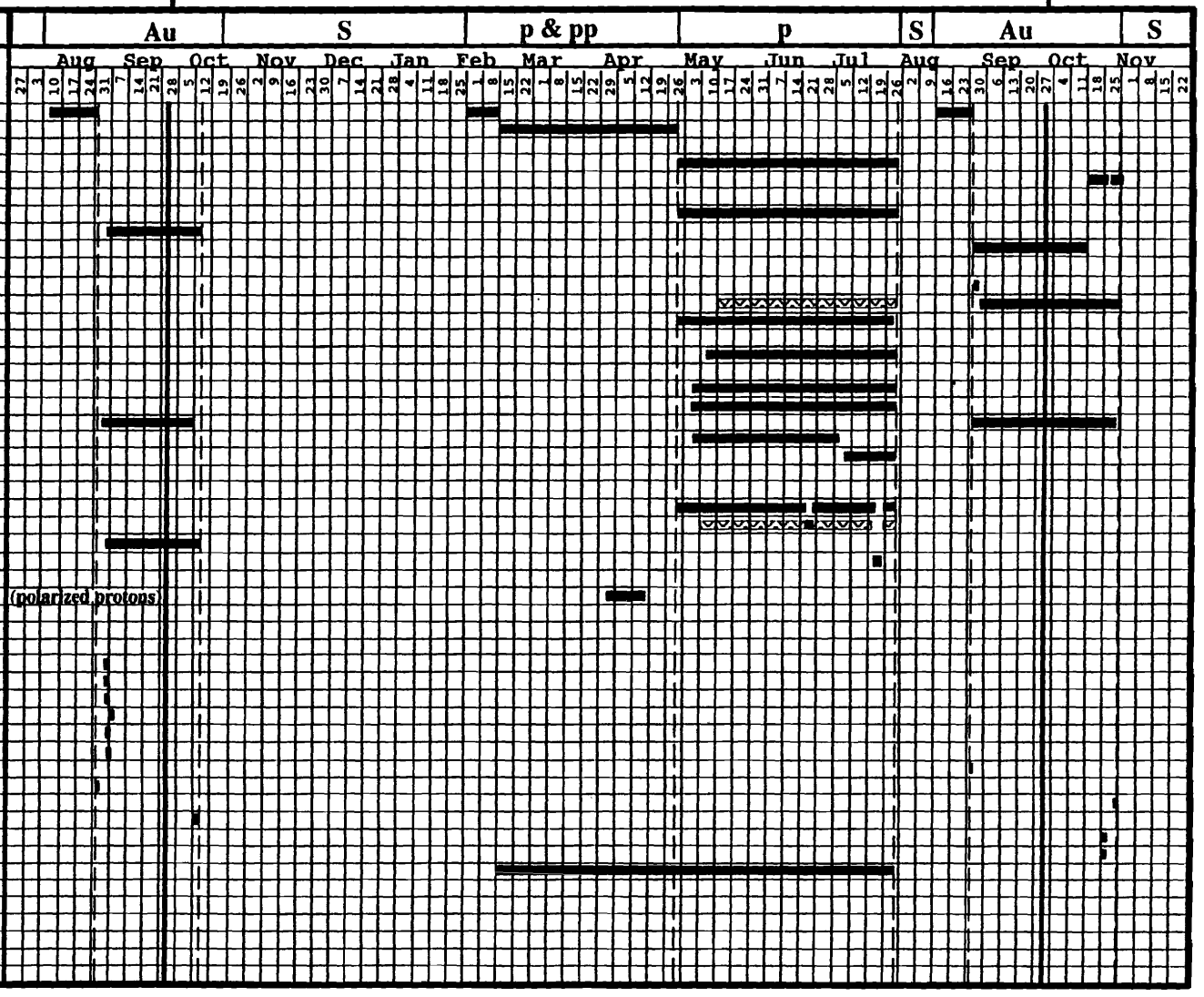

AGS_AS_RUN_FY94.BW

AGS Schedule, FY1995–96 (working copy)

Subject to APC approval
Single Bunch Extraction
Running
Subject to Funding

based on 100 hours per week-- subject to change
schedule subject to appropriate funding

By: P. Pile Date: 6-19-95 (hours to 6-14-95)

FY95 | FY96

AGS Mode: Au, S, pp, p, S, Fe, Au, AGS, p, pp, S, Fe, Au

Aug Sep Oct Nov Dec Jan Feb Mar Apr May Jun Jul Aug Sep Oct Nov Dec Jan Feb Mar Apr May Jun Jul Aug Sep Oct

Beam	Exp #	Experiment	Hours
		AGS Startup	
		AGS Booster Studies	
		BLIP	2874
A1	852	Chung/Cason	4439/3000
A1	881	Lindenbaum	821/1821
A1	891	Plainer	184/1000
A1	895	Rai	0/1688
A1	910	Cole	0/1000
A2	865	Zeller	2487/4500
A3	864	Sandweiss	5603/3500
A3	898	Miller/Kronenberg/Nelson	0/240
B1	866	Chasman/Hamagaki	1529/2600
B1	892	Gould (test)	8/600
B2		Test Beam	1667
B2	821	Morse/Hughes/Roberts	84/2100
B5	871	Molzon/Ritchie/Wojcicki/Kane	4519/3600
C1	850	Carroll/Heppelmann	2759/4000
C4	787	Littenberg/Smith/Bryman	10118/10500
C5	877	Braun-Munzinger	1798/2600
C5	900	Viola	11/600
C5	896	Crawford/Hallman	0/1000
C6	905	Nagae	0/400
C8	890	Neikens/Chrien/Peng	1830/1519
C8	907	Thiessen/Peng	0/1450
C8	909	Briscoe/Tippens	727/600
D6	813	Franklin/Barnes	4397/3679
D6	885	May/Franklin/Davis	67/1000
D6	906	Fukuda/Chrien	0/1200
D	892	Gould	8/600
VI	821	Morse/Hughes/Roberts	84/2100
AGS	880	Roser/Lee	259/320
		Small Heavy Ion Experiments	
B1	868	Waddington	27/47
B1	869	Waddington	41/107
B1	882C	Price	33/50
A	882D	Price	25/50
B1	893	Thompson	2/1
A	903	Finnemore/Snead	1/24
	904	Weinstein	0/24
C5	NRL	Adams	8
		Experiments not scheduled	
A1	817	Bonner/Roberts	700/1300
C8	856	Kalogeropoulos	0/600
U	841	Mann,W.A.	0/340
U	889	Mann,A.K.	0/5000
	844	Cumming	32/100
	862	Hill	42/56
		Deferred	
B1	894	Stephang/Manly	0/1800
C6	913A	Tippens/Sadler	650
D6	913B	Tippens/Sadler	2400
C6	914A	Neikens/Efendiev/Kozlenko	600
D6	914B	Neikens/Efendiev/Kozlenko	1400

ags_schedule_fy95_96.rev10bw

TABLE I.

AGS Experiments, ≥ FY1994 (as of 14 April 1995)

Exp/Mode	Institutions	Title
E787 SEB	BNL/Princeton/TRIUMF/KEK/INS-Tokyo	Continued search for the rare decays $K^+ \rightarrow \pi^+$ + neutrals
E813 SEB	Alberta/Birmingham/BNL/CMU/Freiburg/IUCF/Kyoto/Kyoto Sangyo/LANL/Manitoba/New Mexico/TRIUMF/Vassar/Yale	Search for a strangeness -2 dibaryon
E817 PP	Rice/BNL/Johns Hopkins/Minnesota	Spin transfer in hyperon production
E821 MBE	BNL/Boston/Cornell/Fairfield/Heidelberg/Illinois/KEK/LANL/LBL/Max Planck-Heidelberg/Minnesota/Novosibirsk/ Tokyo/Riken/Yale	A new precision measurement of the muon g-2 value at the level of 0.35 ppm
E836 SEB*	Alberta/Birmingham/BNL/CMU/Freiburg/IUCF/Kyoto/Kyoto Sangyo/LANL/Manitoba/New Mexico/TRIUMF/Vassar/Yale	Search for a strangeness -2 dibaryon using a ^{3}He target
E841 FEB	ANL/Minnesota/Oxford/Rutherford-Appleton	Physics calibration of the Soudan-II nucleon decay experiment using neutrinos at the AGS
E844 HIP	BNL/Oregon State	Measurement of the angular distribution for fragments in the target rapidity region
E850 SEB	Aukland/BNL/Minnesota/Mt. Holyoke/Penn State/UMass-Dartmouth/Tel-Aviv	EVA, A Solenoid detector for large angle exclusive reactions: phase I - determining color transparency to 22 GeV/c
E852 SEB	BNL/Indiana/IHEP/Louisville/Moscow State/Notre Dame/UMass-Dartmouth/Northwestern/RPI	Search for mesons with unusual quantum numbers
E856 SEB	BNL/Case Western/Harvard/Loma Linda/Mass/Syracuse/SUNY Health Sci. Center	Exploration of the biomedical potential of antiprotons
E862 HIP	BNL/Iowa State	Electromagnetic dissociation of ^{59}Co and ^{197}Au by ^{139}La and ^{197}Au projectiles
E864 HIP	BNL/Iowa St/MIT/Penn St/Purdue/Bari/U Mass/Wayne St/Yale	Production of rare composite objects in relativistic heavy ion collisions
E865 SEB	BNL/INR-Moscow/JINR-Dubna/PSI-Basel/Pittsburgh/Tbilsi/New Mexico/Yale/Zurich	An improved search for the decay $K^+ \rightarrow \pi^+\mu^+e^-$
E866 HIP	ANL/BNL/Columbia/INS-Tokyo/Kyoto/Kyushu/LLNL/MIT/NYU/UC-Riverside/UCSSL/Tokyo/Tsukuba	Studies of particle production at high baryon density using the Au beam
E868 HIP	Minnesota/Louisiana St/INP-Krakow/ITEP-Moscow	Exp. 808-Interactions of 14.1 GeV/Nucleon Nuclei from ^{16}O to ^{197}Au in Light & Heavy Targets
E869 HIP	Minnesota/Washington/Caltech	Measurement of fragment yields for 14 GeV/Nucleon Au+X collisions
E871 SEB	UC-Irvine/U Richmond/Stanford/U Texas-Austin/William & Mary	A search for a very rare K^0_L decays
E877 HIP	BNL/GSI/Idaho Nat Eng. Lab/McGill/Pittsburgh/Sao Paulo/SUNY-Stony Brook/Wayne St	Study of relativistic nuclear collisions with heavy ion beams using the E814 4π calorimetry and modified forward spectrometer
E878 HIP*	UCSSL/BNL/Columbia/Johns Hopkins/KEK/LBL/Tokyo/UCLA/USRA/Waseda/Yale	Investigation of antinucleus production and search for new particles in nucleus-nucleus collisions at the AGS
E880 PP	ANL/BNL/FNAL/IUCF/KEK/TRIUMF	The effects of a partial snake on polarization at the AGS
E881 SEB	BNL/CCNY/RPI	Utilizing $\phi\phi$ spectroscopy to search for exotic glueballs, exotic hybrid or multiquark states
E882 HIP#	UC-Berkeley	Search for particles with $\|Z\| \geq 3$ and negative charge or large A/Z produced in central nucleus-nucleus collisions
E898 HIP*	Siegen	Fragmentation of Au-projectiles at AGS energies
E885 SEB	BNL/CMU/Kyoto/Kyoto Sangyo/Manitoba/New Mexico/TRIUMF/Vassar	Experiment to detect $\Lambda\Lambda$ hypernuclei
E886 HIP*	Birmingham/BNL/CMU/Freiburg/Kyoto/Kyoto Sangyo/New Mexico/Vassar/Yale	Search for new particles in nucleus-nucleus collisions
E887 SEB*	BNL/Hampton/Houston/Indiana/Ohio U/Tokyo/INS-Tokyo	Do narrow Σ hypernuclear states exist?
E889 FEB	U Penn/BNL/UC Riverside/UC Santa Barbara/Linfield/LANL/Louisiana Tech/New Mexico/Southern U & A&M College/ Temple/LSU/Montreal/Texas/TRIUMF/Valparaiso	Long baseline neutrino oscillation search
E890 SEB	Abilene Christian/BNL/UCLA/LANL/Julich/Ohio U/Vassar/Zagreb	A new test of charge symmetry in η production on deuterium
E891 HIP	BNL/CCNY/UC-Berkeley/UC-Davis/Rice	Search for quark matter (QGP) & other new phenomena utilizing Au-Au collisions at the AGS
E892 HIP	BNL/LBL/Iowa St/Stanford/SAn Jose St	Capture from pair production
E893 HIP	Dublin Institute for Advanced Studies	Temperature/zenith angle calibration of polycarbonate track detectors
P894 SEB	BNL/INP-Krakow/Jagiellonian U/MIT/Niels Bohr Inst/Illinois/Maryland/Yale	PHOBOS@AGS: A study of high baryon density using the PHOBOS spectrometer
E895 HIP	UC-Davis/INFN-Italy/Kent State/LBL/LLNL/Purdue/Texas A&M/Texas	Exclusive study of nuclear collisions at the AGS
E896 HIP	SSL-LBL/UCLA/Wayne St/Johns Hopkins/UC-Berkeley/BNL/Columbia/LBL/Texas/USRA/Catania/CERN	To search for a short lived H dibaryon, short lived strange matter, and to investigate hyperon production in 116A GeV/c AuAu collisions
E898 NASA	LBL/JPL/San Francisco/Columbia/Colorado St/UC-Davis	Genetic and epigenetic effects produced by high energy heavy ions
E899 SEB*	Colorado/Rio de Janeiro/SUNY-Stony Brook/PINSTECH	High energy pion-induced nuclear fragmentation
E900 SEB	BNL/Indiana/Michigan St/Maryland/Simon Fraser	Energy dissipation & multifragmentation in p+A reactions between 2 & 28 GeV/c
E903 HIP#	BNL/Ames Lab	A study of domain wall pinning in irradiated samples of $Nd^2Fe^{14}B$
E904 HIP	Houston/Texas Southern/IUCF	A study of columnar pinning centers in high T_c superconductor
E905 SEB	BNL/Tokyo/INS-Tokyo/Ohio/Houston	Search for a Σ hypernuclear bound state in ^{4}He $(K^-,\pi^\pm)$ reactions
E906 SEB	INS-Tokyo/BNL/CMU/Gifu/INR-Russia/Kyoto/Kyoto Sangyo/Rutgers/TRIUMF/Manitoba/New Mexico	Experiment to Detect Double-Λ Hypernuclei by Observing Characteristic π^- Mesonic Decays
E907 SEB	Ben-Gurion/BNL/CMU/Colorado/Hampton/Houston/Kentucky/Louisiana Tech/LANL/Minnesota/INR-Moscow/R. Boskovic Inst/ UTexas-Austin/Zagreb	Investigation of Light Hypernuclei Using the (K^-_{stop},π^0) reaction
P908 SEB	Minnesota/Colorado/BNL/Maryland/LAMPF/Houston/Ohio U	K^- Elastic Scattering on ^{12}C and ^{40}Ca between 350 and 500 MeV/c
E909 SEB	G. Washington/UCLA/BNL/Abilene Christian University/Rudjer Boskovic Inst/JINR-Dubna/PNPI-Gatchina	ETA Production at Threshold in the Reactions $\pi^- p \rightarrow \eta n$ and $K^- p \rightarrow \Lambda\eta$
E910 SEB	Columbia/BNL/LLNL/INP-Tsukuba	A Facility to Study Proton-nucleus and Heavy Ion Collisions Using a Large-acceptance Detector with Particle Identification
P913 SEB	ACU/UCLA/JINR, Russia/Kent St/St.Petersburg Nuclear Physics Inst/R. Boskovic Inst.	Baryon Spectroscopy with the Crystal Ball
P914 SEB	UCLA/ACU/G.Washington/Kent St/R.Boskovic Inst/JINR, Dubna, St. Petersburg Nuclear Physics Inst.	Neutral Hyperon Spectroscopy
T915 HIP	UC-Berkeley/Space Research Institute (Moscow)	Proposal for 11.4A GeV Au exposure at the AGS. The Trek Collaboration

SEB - Slow Extracted Beam - Protons
FEB - Fast Extracted Beam, Protons
HIP - Slow Extract Beam, Heavy Ions
SBE - Single Bunch Extraction, Protons
PP - Slow Extracted Beam, Polarized Protons
MBE - Multiple Bunch Extraction, Protons
* - Completed in FY94
\# - Complete in FY95
NASA - 1 GeV/c/nucleon Fe

wp60/AGSExp95.CHT

AGS Beams, October 94

Beam	GeV/c	δp/p (% fwhm)	Prod. Angle (deg)	ΔΩ (msr)	Flux / 10^{13} 24 GeV/c protons on target K^+	K^-	p	$\bar{p}$	π^+	π^-	GeV/c	Purity	Remarks
Separated Charged Particle Beams													
C4	≤ 0.83	4	0	12.0	4.6×10^6	1.5×10^6	1.5×10^9	1.0×10^6	6.0×10^9	6.0×10^9	0.80	$\pi^+/K^+ = 0.4$	L = 18 m – "LESBIII" ~ 1×10^6 stopped $K^+/10^{13}$ protons
C6,C8	≤ 0.75	5	5	10.0	1.0×10^6	3.3×10^5	3.3×10^8	4.6×10^4	2.0×10^9	2.0×10^9	0.70	$\pi^-/K^- = 5$ $\pi^+/K^+ = 1$	L = 15 m – "LESBII"
D6	≤ 1.9	6	5	1.6	5.5×10^6	2.3×10^6	3.0×10^8	1.1×10^6	4.9×10^8	4.1×10^8	1.80	$\pi^-/K^- = 0.8$ $\pi^-/\bar{p} = .07$	L = 31 m – "2GEV"
Unseparated Charged Particle Beams													
A1*	5–28	3	0	0.2	1.9×10^6	2.9×10^4	5.0×10^9	2.3×10^3	3.0×10^7	1.0×10^7	18		L = 130 m to MPS – "HEUB"
A2	< 6.5	5	3.5	0.75	5.8×10^7	1.9×10^7	6.9×10^8	6.3×10^6	1.3×10^9	8.8×10^8	6		L = 34 m – "6GEV"
A3*	1–28	4	0	0.1			6.0×10^8		1.0×10^8	4.0×10^7	14		Primarily HI "OR" with A1
B1*	5–28	3	0	0.05			3.0×10^8		3.0×10^7	2.0×10^7	14		Primarily HI "OR" with B5
B2	< 9	5	6	0.5	3.4×10^5	1.2×10^5	8.5×10^6	9.5×10^4	1.2×10^7	9.0×10^7	4		L = 40 m – Test Beam
C1	1–20	5	0	0.8	3.0×10^7	3.5×10^6	1.0×10^9	0.7×10^6	3.5×10^8	1.6×10^8	13		L = 100 m – "OR" with C5
C5*	1–28	2	0	0.15			1.0×10^8				13		L = 81 m – "OR" with C1
Neutral Beam													
B5	2–20		1–4.5	0.1			K^0_L flux = 1.3×10^8 @ 3.75^0				2–20	$n/K^0_L = 6$	L = 10 m – "OR" with B1
Muon Channel													
D2	0.025–0.15	9 (π) 30 (μ)	135 (π)	24 (π)			μ^+ flux = 2.0×10^6 Surface μ^+ flux = 2.0×10^6						To Be Commissioned
Neutrino Beam													
U							ν flux = $2.0 \times 10^{10}/m^2$ (Wide Band) $\bar{\nu}$ flux = $1.4 \times 10^{10}/m^2$ (Wide Band)						Not Presently Available FEB Flux avg. over 1.5 m R. <E> = 1.4 GeV/c^2 Wide Band
g–2 π–μ Transfer Line													
V1	< 3.0	0.6	0				π^+ flux = 1.6×10^8 μ^+ flux = 7.3×10^5				3.0		L = 120, for injection to g–2 ring to be commissioned in FY96

* These 0^0 beam lines can be used for full energy polarized protons and/or heavy ion beams

11-29-94; ags_beams_oct_94.dat

AGS Experimental Area

FY1992 Physics Program

21 May – 31 Jul 92, 24 GeV/c protons
21 Mar – 21 Apr 92, 14.0 GeV/c/nucleon Si
26 Apr – 7 May 92, 11.5 GeV/c/nucleon Au

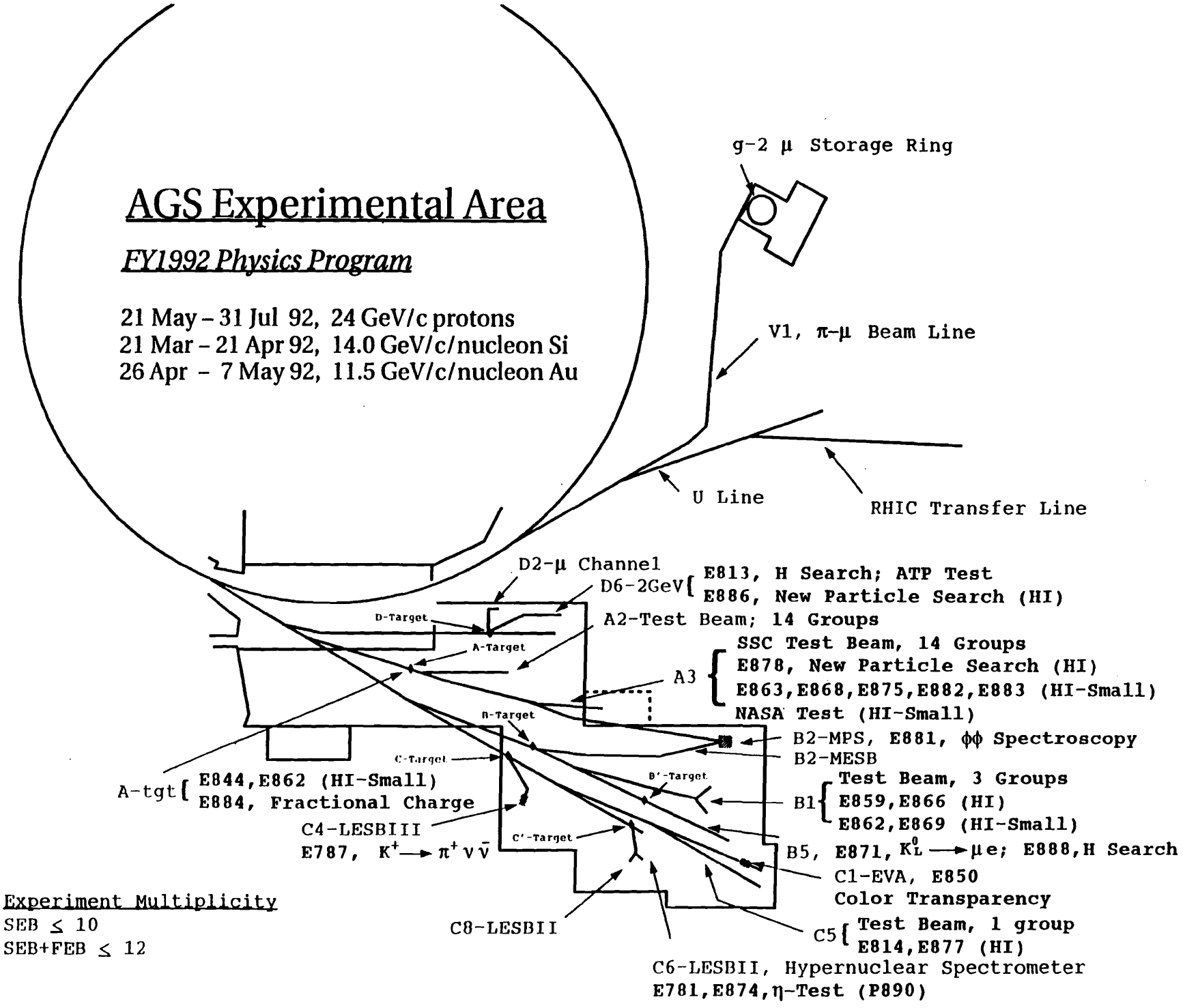

Experiment Multiplicity
SEB ≤ 10
SEB+FEB ≤ 12

AGS Experimental Area

FY1993 Physics Program

1 June – 31 July 93, 24 GeV/c protons
1 Sept – 14 Oct 93, 11 GeV/c/nucleon Au

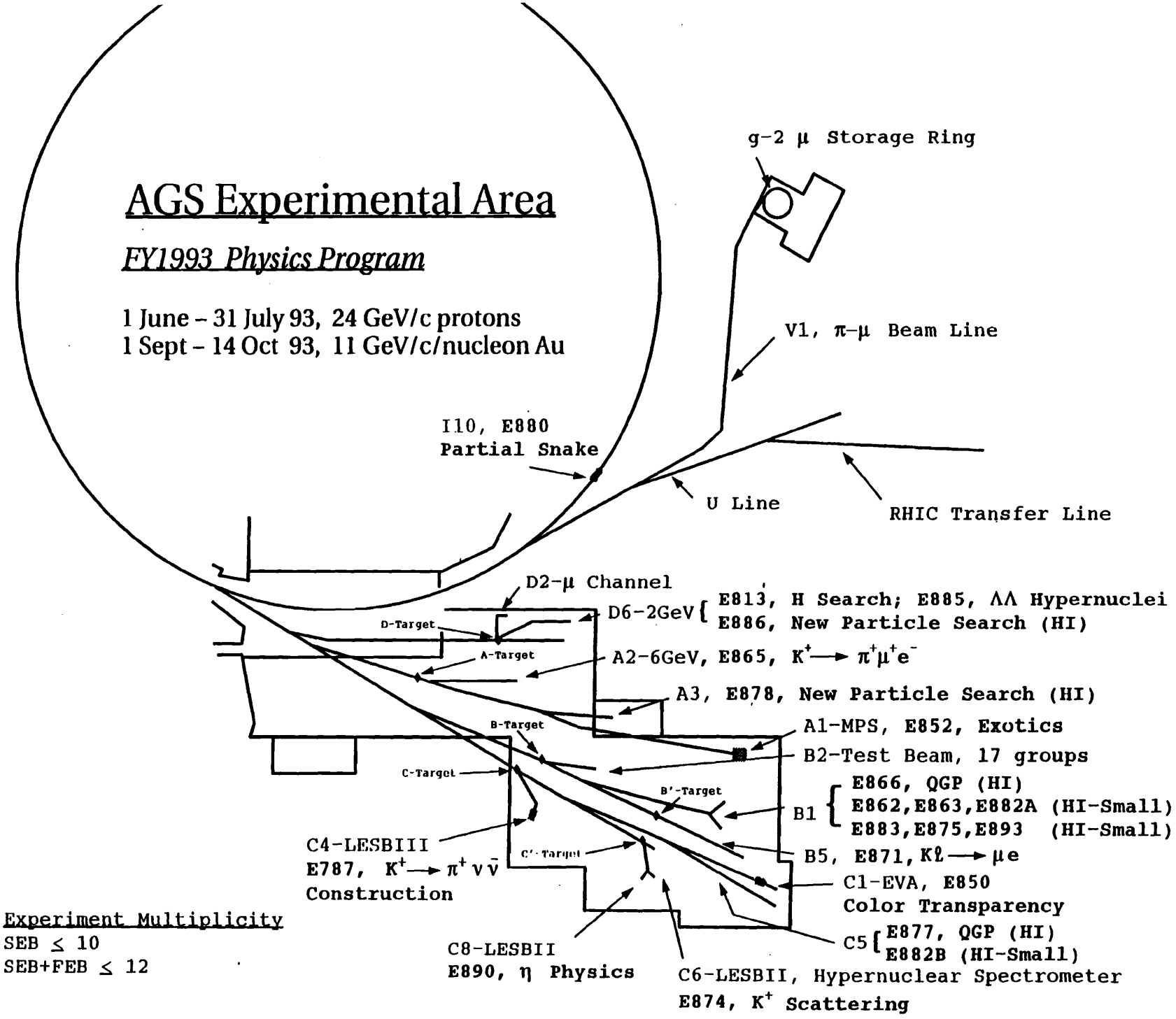

Experiment Multiplicity
SEB ≤ 10
SEB+FEB ≤ 12

AGS Experimental Area

FY1994 Physics Program

Proton : 1 May – 31 July 94, 24 GeV/c

HI : 1 Sep – 31 Oct 94, 11.6 GeV/c/nucleon Au

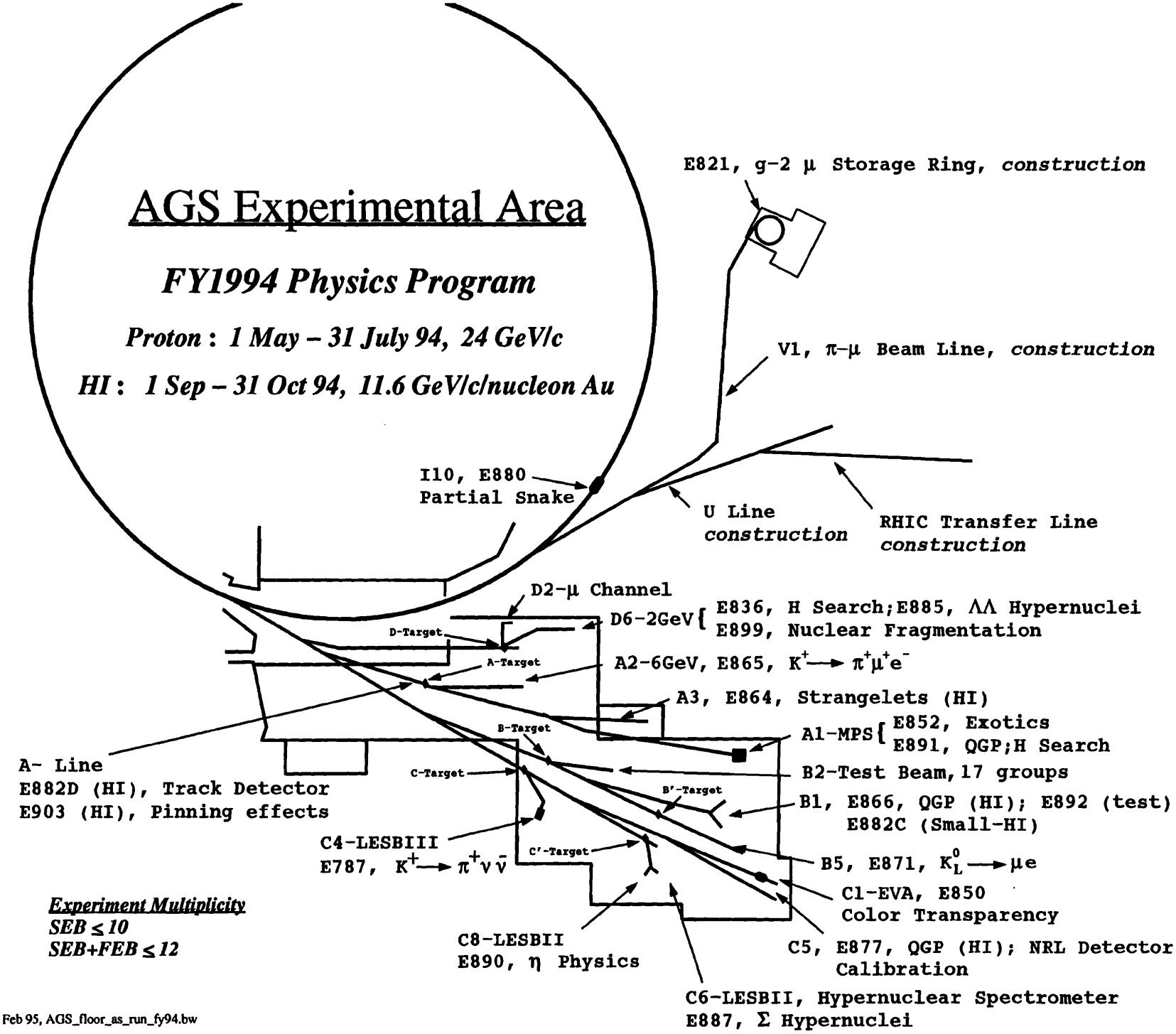

Experiment Multiplicity
SEB ≤ 10
SEB+FEB ≤ 12

14 Feb 95, AGS_floor_as_run_fy94.bw

AGS Experimental Area

1995 Physics Program – In Progress/Planned

14 June 95

Proton **:** ***1 Dec 94 – 18 June 95, 24 GeV/c***

NASA **:** ***1 Oct – 14 Oct 95, 1 GeV/nucleon Fe***

HI **:** ***16 Oct – 11 Dec 95, 11.6 GeV/c/nucleon Au***

HI **:** ***12 Dec 95 – 9 Jan 96, < 11.6 GeV/c/nucleon Au***

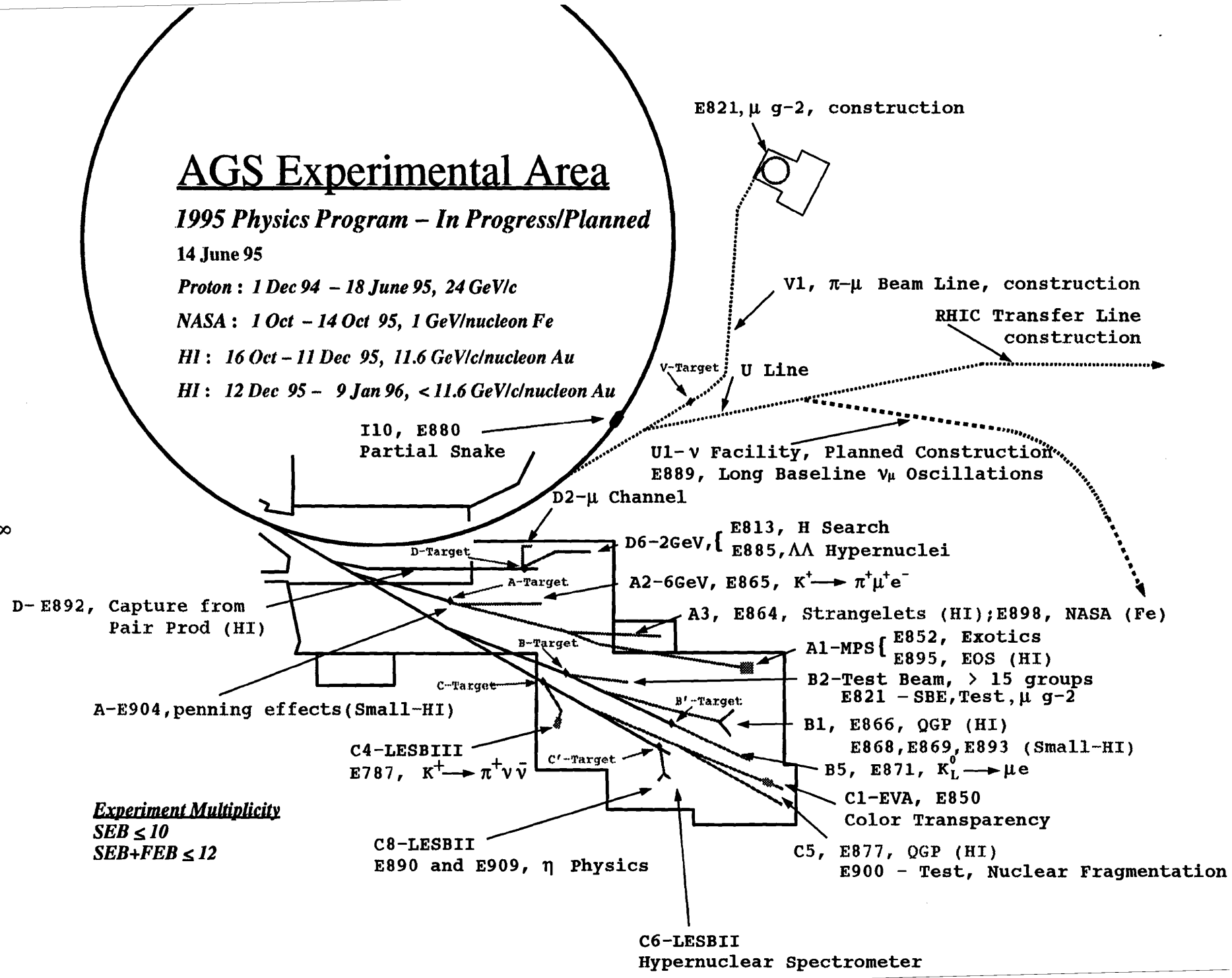

Experiment Multiplicity
SEB ≤ 10
SEB+FEB ≤ 12

AGS_floor_plan_fy95_rev1.dat

LIST OF EXPERIMENTS

EXPERIMENT NUMBER	COLLABORATION SPOKESMAN	EXPERIMENT TITLE	PAGE
781	BNL/MIT/Houston/Carnegie-Mellon/Vassar/NYU *Deutsch and May*	Spin Dependence of the Lambda Nucleus Interaction Determined by Observation of Hypernuclear Gamma Rays	17
787	BNL/INS-Tokyo/KEK/Princeton/TRIUMF *Bryman, Littenberg, and Smith*	A Study of the Decay $K^+ \rightarrow \pi^+ \nu \bar{\nu}$	19
813	Carnegie-Mellon/Alberta/Birming/BNL/Freiburg/IUCF/Kyoto/Kyoto-Sangyo/LAMPF/Manitoba/New Mexico/TRIUMF/Vassar/Yale *Franklin and Barnes*	Search for a Strangeness -2 Dibaryon	21
814	BNL/GSI/LANL/McGill/New Mexico/Pittsburgh/São Paulo/SUNY-Stony Brook/Texas A&M/Wayne St/Yale *Braun-Munzinger*	Study of Extreme Peripheral Collisions and of the Transition from Peripheral to Central Collisions in Reactions Induced by Relativistic Heavy Ions	23
817	Rice/BNL/J. Hopkins/Arizona *Bonner and Roberts*	Polarization Transfer in Hyperon Production	25
821	Boston/BNL/Budker Inst/Cornell/Fairfield/Heidelberg/Illinois/LBL/LANL/Max Planck Inst/Minnesota/KEK/Riken/Tokyo/Yale *Hughes, Morse, and Roberts*	A New Precision Measurement of the Muon g-2 at the Level of 0.35 PPM	27
836	Carnegie-Mellon/Alberta/Birmingham/BNL/Freiburg/IUCF/Kyoto/Kyoto-Sangyo/LAMPF/Manitoba/New Mexico/TRIUMF/Vassar/Yale *Franklin and Barnes*	Search for a Strangeness -2 Dibaryon Using a ^{3}He Target	29
844	BNL/Oregon State *Cumming*	Measurement of Angular Distribution for Fragments in the Target Rapidity Region	31
849	AT&T Bell Laboratories *Harshman and Mills*	Search for Muonium to Antimuonium Conversion	33

EXPERIMENT NUMBER	COLLABORATION SPOKESMAN	EXPERIMENT TITLE	PAGE
850	BNL/Aukland/Minnesota/. Mt. Holyoke/Penn St/UMass-Dartmouth/Tel-Aviv *Carroll and Heppelmann*	EVA, A Solenoidal Detector for Large Angle Exclusive Reactions. Determining Color Transparency to 22 GeV	35
852	BNL/Indiana/Louisville/UMass-Dartmouth/Moscow St/ Northwestern/Notre Dame/IHEP-Protvino/RPI *Cason and Chung*	Search for Mesons with Unusual Quantum Numbers	37
856	BNL/Case Western Res/Harvard Cyclotron Lab/Loma Linda/ Massachusetts/Syracuse/SUNY Health Science Center *Kalogeropoulos*	Exploration of the Biomedical Potential of Antiprotons	39
859	ANL/BNL/Columbia/INS-Tokyo/ Kyoto/Kyushu/LLNL/MIT/ NYU/UC-Space Sci. Lab/ UC-Riverside/Tokyo/Tsukuba *Remsburg and Zajc*	Studies of High-Density Baryon Matter from Extended Measurements of Particle Momentum Distributions and from High-Precision Two-Particle Correlations	41
862	Iowa State/BNL *Hill*	Electromagnetic Dissociation of ^{59}Co and ^{197}Au by ^{139}La and ^{197}Au	43
863	Alma Ata/Beijing/Chandigarh/ Changsha/Dubna/Jaipur/Jammu/ Košice/Linfen/Lund/Marburg/ Moscow/St. Petersburg/Washing-ton/Sydney/Tashkent-INP/Tashkent -PTI/Wuhan/Yerevan *Wilkes and Otterlund*	Au Beam Exposures for E815: Particle Production and Nuclear Fragmentation in Collisions of Heavy Ions in Nuclear Targets at AGS Energies	45
864	BNL/Iowa St/Ames Lab/MIT/ Penn St/Purdue/Bari/Mass/ Vanderbilt/Wayne St/Yale *Sandweiss*	Production of Rare Composite Objects in Relativistic Heavy Ion Collisions	47
865	BNL/Bern/Connecticut/INR-Moscow/JINR-Dubna/New Mexico/ PSI/Basel/Pittsburgh/Tibilsi St/ Yale/Zurich *Zeller*	Proposal to Perform an Improved Search for the Decay $K+ \rightarrow \pi^+\mu^+e^-$	49

EXPERIMENT NUMBER	COLLABORATION SPOKESMAN	EXPERIMENT TITLE	PAGE
866	ANL/BNL/Columbia/INS-Tokyo/ Kyoto/LLL/Maryland/MIT/NYU/ UC-SSL/UC-Riverside/Tokyo/ Tsukuba/Yonsei *Chasman and Hamagaki*	Studies of Particle Production at High Baryon Density Using the Au Beam	51
868	Minnesota/Louisiana St/INP-Krakow/ITEP-Moscow *Waddington*	Exp. 808-Interactions of 14.1 GeV/ Nucleon Nuclei from ^{16}O to ^{197}Au in Light and Heavy Targets	53
869	Minnesota/Washington/Caltech *Waddington*	Measurement of Fragment Yields for 14 GeV/Nucleon Au+X Collisions	55
871	UC-Irvine/Richmond/Stanford/ Texas-Austin/William & Mary *Molzon, Ritchie and Wojcicki*	A New Search for Very Rare K_L Decays	57
874	Colorado/Houston/BNL/Ohio *Chrien, Hungerford and Peterson*	Kaon-Nucleus Quasielastic and Elastic Scattering at 720 MeV/c	59
875	SUNY-Buffalo *Jain*	Study of Particle Production and Nuclear Fragmentation in Relativistic Heavy-Ion Collisions in Nuclear Emulsions	61
876	William & Mary/Virginia St/ George Mason/Columbia *Kossler*	μ^+ Surface Beam Characterization	63
877	BNL/GSI-Darmstadt/Idaho Nat. Eng. Lab/McGill/Pittsburgh/São Paulo/SUNY-Stony Brook/Wayne St *Braun-Munzinger*	Study of Relativistic Nuclear Collisions with Heavy Beams Using the E814 4π Calorimetry and Modified Forward Spectrometer	65
878	UC-Space Sci. Lab/BNL/UCLA/ KEK/Waseda/J. Hopkins/Tokyo/ LBL/Columbia/USRA/Yale *Crawford*	Investigation of Antinucleus Production and Search for New Particles in Nucleus-Nucleus Collisions at the AGS	67
880	IUCF/BNL/ANL/TRIUMF/ Fermilab/KEK/IHEP-Serpukov *Lee and Roser*	The Effects of a Partial Siberian Snake on Polarization at the AGS	69

EXPERIMENT NUMBER	COLLABORATION SPOKESMAN	EXPERIMENT TITLE	PAGE
881	BNL/CCNY/RPI *Lindenbaum*	Utilizing $\phi\phi$ Spectroscopy to Search for Exotic Glueballs, Exotic Hybrid or Exotic Multiquark States	71
882	UC-Berkeley *Price*	Search for Particles with $\|Z\| \geq 3$ and Negative Charge or Large A/Z Produced in Central Nucleus-Nucleus Collisions	73
883	University of Siegen *Heinrich*	Fragmentation of Au-Projectiles at AGS Energies	75
884	University of Pittsburgh *Perera*	An Experiment to Enhance Fractional Charge Impurities (FCI) in Semi-Conductors to be Used in an Opto-electronic Search for FCIs	77
885	BNL/Carnegie-Mellon/Kyoto/ Kyoto-Sangyo/Manitoba/New Mexico/TRIUMF/Vassar *May and Franklin*	Experiment to Detect $\Lambda\Lambda$ Hypernuclei	79
886	Kyoto/Kyoto-Sangyo/Birmingham/ BNL/Carnegie-Mellon/Yale/New Mexico/Freiburg/Vassar *Imai, Pile, and Diebold*	Search for New Particles in Nucleus-Nucleus Collisions	81
887	BNL/CEBAF/Yale/Indiana/ INS-Tokyo/Houston/Ohio/Tokyo *Sawafta and Hicks*	Do Narrow Σ Hypernuclear States Exist?	83
888	BNL/UC-Irvine/UCLA/Princeton/ Stanford/Temple/UTexas-Austin/ William & Mary *Cousins and Schwartz*	Search for the H Dibaryon	85
889	BNL/UC-Santa Barbara/Louisiana St/Louisiana Tech/New Mexico/ Montreal/Pennsylvania/Southern Univ&A&M College/Temple/ UTexas-Austin/TRIUMF/Valparaiso *Mann*	Long Baseline Neutrino Oscillation Search	87

EXPERIMENT NUMBER	COLLABORATION SPOKESMAN	EXPERIMENT TITLE	PAGE
890	UCLA/BNL/LANL/Jülich/Ruder Boskovic Inst/G. Washington *Nefkens, Chrien and Peng*	A New Test of Charged Symmetry in Eta Production on Deuterium	89
891	BNL/CCNY/UC-Berkeley/Rice *Platner*	A Search for Quark Matter (QGP) and Other New Phenomena Utilizing Au-Au Collisions at the AGS	91
892	LBL/BNL/Iowa St/San Jose/ Stanford *Gould*	Capture from Pair Production	93
893	Dublin Inst. for Advanced Studies *Thompson*	Temperature Zenith Angle Calibration of Polycarbonate Track Detectors	95
895	UC-Davis/INFN Catania/Kent St/LBL/LLL/Purdue/SUNY-Stony Brook/Texas A&M/ UTexas-Austin *Rai*	Exclusive Study of Nuclear Collisions at the AGS	97
896	SSC/UCLA/Wayne St/Johns Hopkins/UC-Berkeley/BNL/ Columbia/LBL/Texas-Austin/ USRA/Catania/CERN *Crawford and Hallman*	A Proposal to the BNL AGS: To search for a Short-Lived H_0 Dibaryon, Short-Lived Strange Matter, and to Investigate Hyperon Production in 11.6 A GeV/c AuAu Collision	99
898	UC-Davis/Colorado St/Columbia/ Jet Propulsion Lab/LBL *Miller, Kronenberg/Nelson*	Genetic and Epigenetic Effects Produced by High Energy Heavy Ions	101
899	Colorado/Rio de Janeiro/SUNY-Stony Brook *Peterson*	High Energy Pion-Induced Nuclear Fragmentation	103
900	Indiana/Simon Fraser/Maryland/ Michigan State/CEA Saclay/BNL *Kwiatkowski and Viola*	Energy Dissipation and Multifragmentation in h + A Reactions between 2 and 24 GeV/c	105
903	BNL/Ames Labortory *Snead*	A Study of Domain Wall Pinning in Irradiated Samples of $Nd_2Fe_{14}B$	107
904	Houston/Texas Southern/IUCF *Weinstein*	A Study of Columnar Pinning Centers in High T_c Superconductor	109

EXPERIMENT NUMBER	COLLABORATION SPOKESMAN	EXPERIMENT TITLE	PAGE
905	BNL/Tokyo/INS-Tokyo/Ohio/ Houston *Nagae*	Search for a Σ hypernuclear bound state in ^{4}He ($K^-,\pi^\pm$) reactions	111
906	INS-Tokyo/BNL/CMU/Gifu/INR-Russia/Kyoto/Kyoto-Sangyo/Rutgers/ TRIUMF/Manitoba/New Mexico *Fukuda and Chrien*	Experiment to Detect Double-Λ Hypernuclei by Observing Characteristic π- Mesonic Decays	113
907	Ben-Gurion/BNL/CMU/Colorado/ Hampton/Houston/Kentucky/ Louisiana Tech/LANL/Minnesota/ INR-Moscow/R. Boskovic/Texas-Austin/Zagreb *Thiessen and Peng*	Investigation of Light Hypernuclei Using the K^-_{stop} ,π°) Reaction	115
909	G. Washington/UCLA/BNL/ACU/ R. Boskovic Inst/JINR-Dubna/ PNPI-Gatchina *Briscoe and Tippens*	ETA Production and Threshold in the Reactions $\pi^- p \rightarrow \eta n$ and $K^- p \rightarrow \Lambda\eta$	117

Summaries

of

Experiments

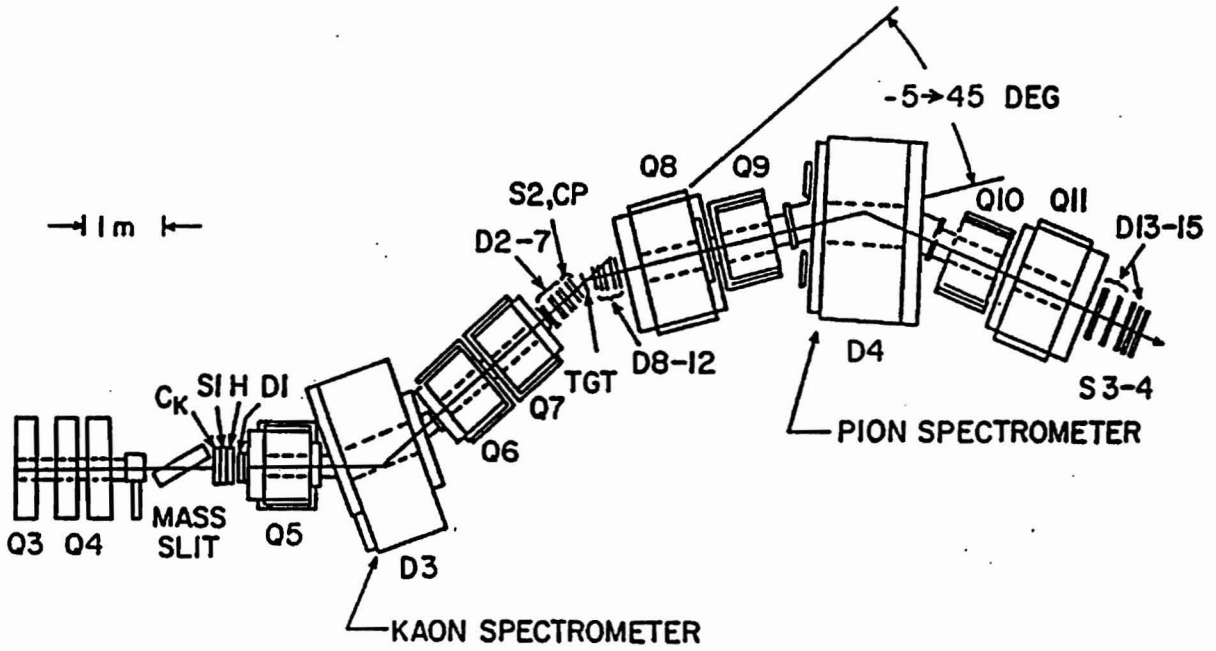

The BNL Hypernuclear Spectrometer System as configured during the initial running phase of E781. Since then the Pion Spectrometer has been moved from the LESB-I beam line to the LESB-II beam line. The Kaon Spectrometer is now comprised of the end elements of LESB-II. The target is surrounded with either intrinsic germanium detectors or NaI detectors.

Beam: C6
Status: Complete in 1992
Hours Charged/Approved: 1167/1120

EXPERIMENT 781 - SPIN DEPENDENCE OF THE LAMBDA NUCLEUS INTERACTION DETERMINED BY OBSERVATION OF HYPERNUCLEAR GAMMA RAYS

Brookhaven National Laboratory	S. Bart, R. E. Chrien, M. May. P. H. Pile
Massachusetts Institute of Technology	M. Deutsch
University of Houston	E. V. Hungerford, B. Mayes, L. Pinsky
Carnegie-Mellon University	P. Barnes
Vassar College	R. L. Stearns
New York University	B. Budick
Spokesmen:	**M. Deutsch and M. May**

This experiment measured the γ-ray transitions between hypernuclear states which differ only by the orientation of the Λ spin with respect to the angular momentum of the nuclear core. This directly measures the spin dependence of the Λ nucleus interaction independent of any model. The experimenters expect these spin dependent splittings to be less than 300 keV. Germanium detectors were used to observe the γ rays in coincidence with a our sample of hypernuclear events in a narrow range of excitation energy selected by the hypernuclear spectrometer in LESBI and LESBII at the AGS. This experiment continued the research begun in Experiment 760, the first experiment to utilize this $(K\pi,\gamma)$ coincidence technique.

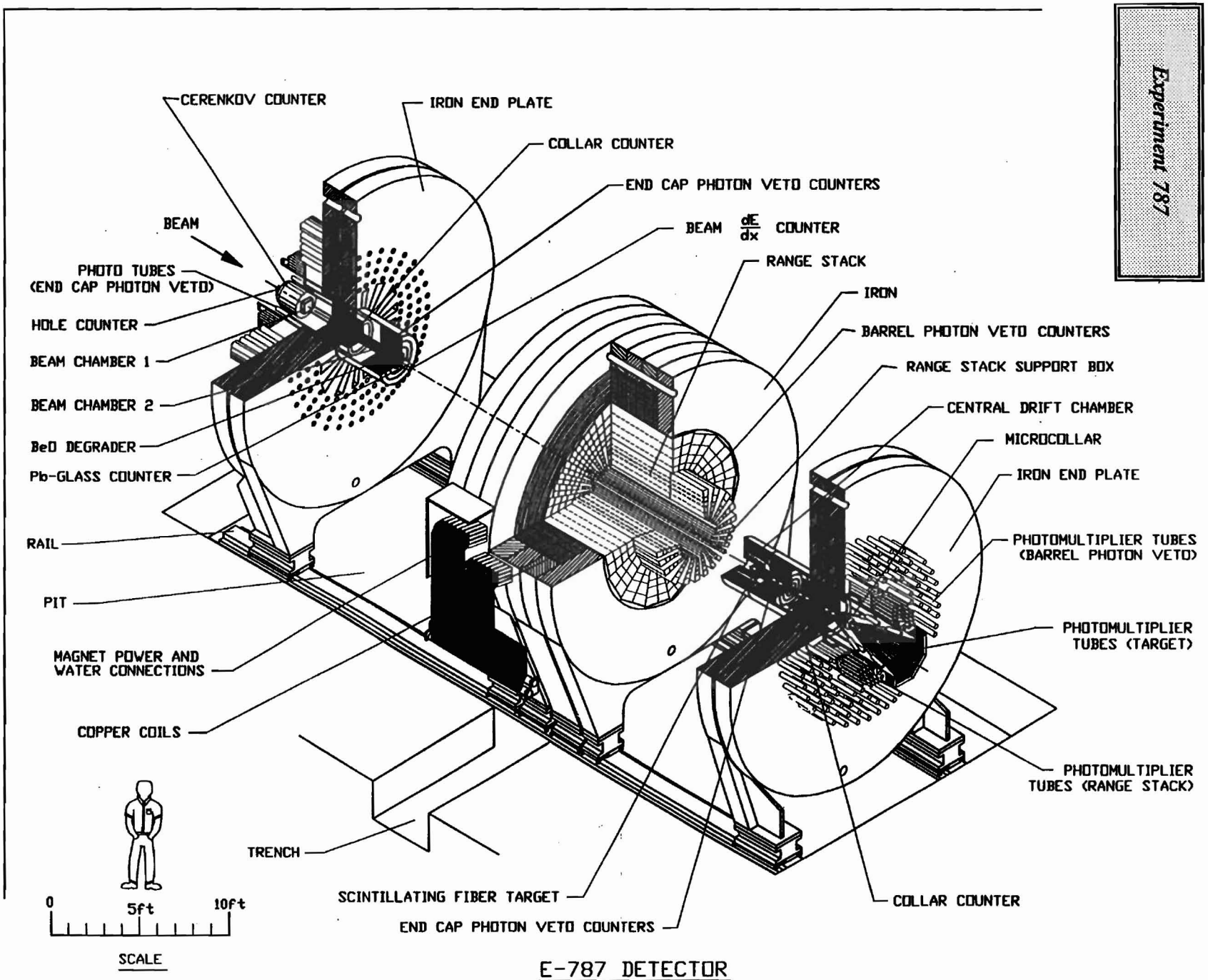

E-787 DETECTOR

ISO JULY 1990 to MAY 1994

Beam: C4
Status: In progress
Hours Charged/Approved: 6391/10500

EXPERIMENT 787 - A STUDY OF THE DECAY $K^+ \rightarrow \pi^+ \nu \bar{\nu}$

Brookhaven National Laboratory	S. Adler, M.S. Atiya, I-H. Chiang, M. Diwan, J.S. Frank, J.S. Haggerty, S. Kettell, T.F. Kycia, K.K. Li, L.S. Littenberg, A.J. Stevens, R.C. Strand, C. Witzig
INS-Tokyo	K. Ino, T. Komatsubara, H. Okumo, S. Sugimoto, K. Ukai
KEK	T. Inagaki, S. Kabe, M. Kobayashi, Y. Kuno, T. Sato, T. Shinkawa, Y. Yoshimura
Princeton University	M. Ardebili, M. Convery, M.M. Ito, D.R. Marlow, R. McPherson, P.D. Meyers, F.C. Shoemaker, A.J.S. Smith, B. Stone
TRIUMF	M. Aoki, E.W. Blackmore, D.A. Bryman, P. Kitching, A. Konaka, J.A. Macdonald, J. Mildenberger, T. Nakano, T. Numao, V. Pacradouni, P. Padley, J.-M. Poutissou, R. Poutissou, G. Redlinger, J. Roy, M. Rozon, R. Soluk, A.S. Turcot
Spokesmen:	**D.A. Bryman, L.S. Littenberg, A.J.S. Smith**

Experiment 787 is a search for reactions of the type $K^+ \rightarrow \pi^+ XX$, where X is a weakly interacting light neutral particle. The experiment is sensitive to such decays at the 10^{-10} level. The prime candidate is $K^+ \rightarrow \pi^+ \nu \bar{\nu}$ which provides a uniquely stringent test of the Standard Model and its parameters because it is the only experimentally accessible process that is dominated by an unambiguously calculable higher order weak interaction. Two body decays $K^+ \rightarrow \pi^+ X$ are also searched for to place constraints on the existence of a variety of hypothetical particles such as axions, familons, hyperphotons and supersymmetric neutrals predicted by extensions to the SM. Several other rare decays including $K^+ \rightarrow \pi^+ \gamma\gamma$, $K^+ \rightarrow \pi^+ \mu^+ \mu^-$, $\pi^0 \rightarrow \nu \bar{\nu}$ and $\pi^0 \rightarrow \gamma XX$ are also being investigated.

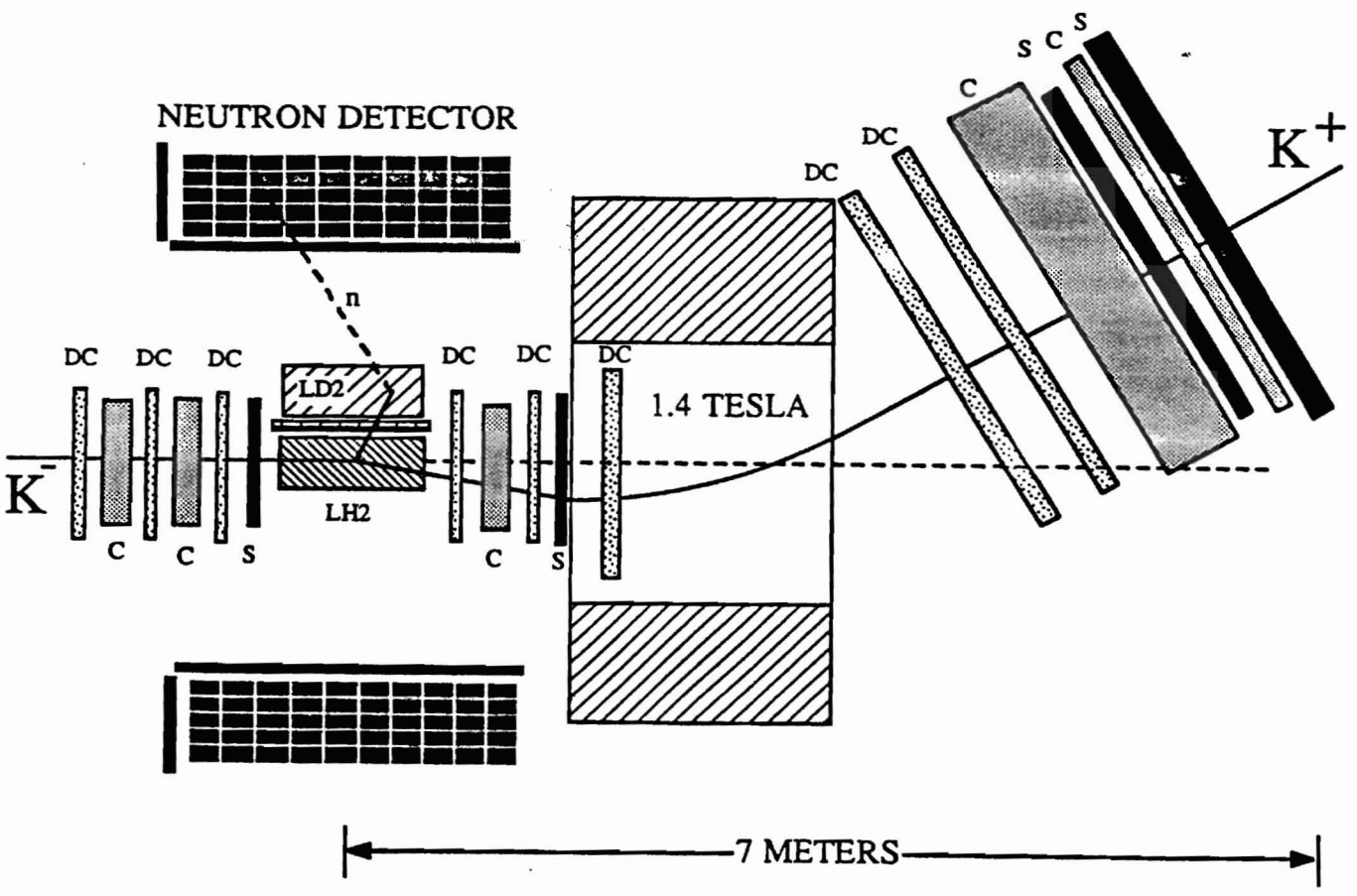

Fig. III.B.1. Schematic layout of the $(\Xi^-,d)_{atom}$ experiment. The detection of neutrons from the reaction $(\Xi^-,d)_{atom} \rightarrow H + n$ will be the signature of H particle production.

Beam: D6
Status: In Progress
Hours Charged/Approved: 2254/3679

EXPERIMENT 813 - SEARCH FOR A STRANGENESS -2 DIBARYON

Carnegie-Mellon University	A. Berdoz, G. Franklin, R. Magahiz, R. McCrady, F. Merrill, C. Meyer, B. Quinn, R. A. Schumacher, R. Sukaton, V. Zeps
University of Alberta	M. Rozon
University of Birmingham	J. Lowe, J. Nelson, R. Zybert
Brookhaven National Laboratory	R. Chrien, P. Pile, R. Sawafta, R. Sutter
Freiburg University	T. Buerger, M. Burger, H. Fischer, J. Franz, E. Rössle, H. Schmitt, M. Wieder
Indiana Univ. Cyclotron Facility	J. Szymanski
University of Kyoto	H. Enyo, T. Iijima, K. Imai, N. Saito, S. Yokkaichi
University of Kyoto-Sangyo	K. Okada, F. Takeutchi
LAMPF	P. Barnes
University of Manitoba	C. Davis, L. Gan, M. Landry, L. Lee, S. Page, D. Ramsay, V. Sum, W. vlan Oers
University of New Mexico	B. Bassalleck, M. Chapman, A. Rusek. R. Stotzer, D. Wolfe
TRIUMF	D. Gill
Vassar College	R. Stearns
Yale University	G. Diebold
Spokesmen:	**G. B. Franklin and P. D. Barnes**

Motivated by Jaffe's 1977 prediction of a six-quark object with strangeness -2 and $J^{\pi} = O^{+}$ at a mass of 2150, this experiment proposes to study the strangeness -2 two-baryon mass spectrum from 100 MeV below the mass of the lightest known two-baryon strangeness -2 system, $\Lambda\Lambda$ mass. This particle, called the "H", has been predicted by later bag models as well. Although the mass calculation is model dependent, the predictions are considered within the expected range of sensitivity. The possibility of resonances near the $\Lambda\Lambda$ mass due to conventional meson exchange forces can also be explored since the experiment covers the region both above and below the $\Lambda\Lambda$ mass.

Experiment 814

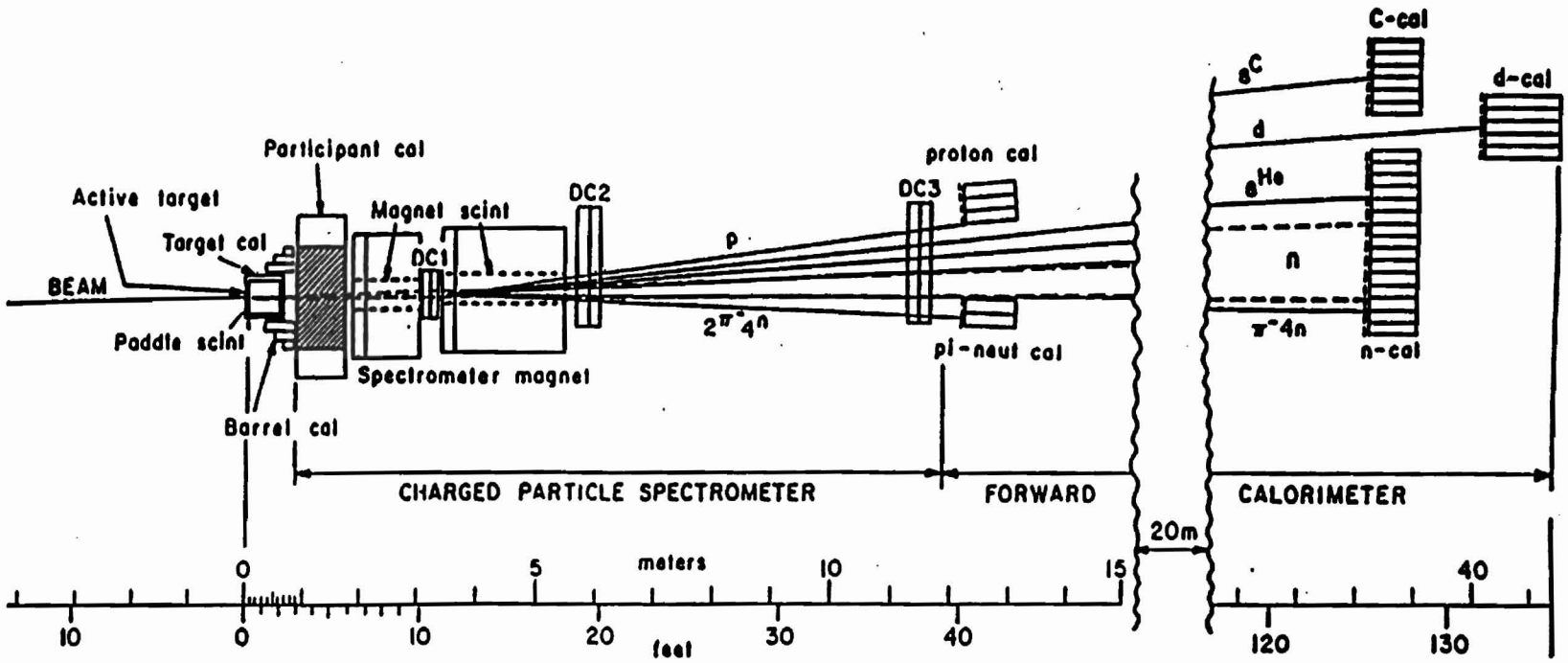

Beam: C1
Status: Completed 1992
Hours Charged/Approved: 3625/3600

EXPERIMENT 814 - STUDY OF EXTREME PERIPHERAL COLLISIONS AND OF THE TRANSITION FROM PERIPHERAL TO CENTRAL COLLISIONS IN REACTIONS INDUCED BY RELATIVISTIC HEAVY IONS

Brookhaven National Laboratory	M. Fatyga, D. Lissauer, T. Ludlam, S. McCorkle, E. O'Brien, H. Takai, T. Throwe, C. Woody
GSI, Darmstadt	N. Herrmann
Los Alamos National Laboratory	D. Fox, J. Simon-Gillo
McGill University	J. Barrette, S. Gilbert, R. Lacasse, S.K. Mark, M. Rosati, G. Wang
University of New Mexico	D. Wolfe
University of Pittsburgh	W. Cleland, K. Jayananda, D. Kraus, U. Sonnadara, Z. Zhang
University of São Paulo	N. DaSilva, O. Dietzsch, M. Takagui
State University of New York, Stony Brook	P. Braun-Munzinger, G. David, J. Dee, T. Hemmick, B. Hong, W. Llope, M. Rao, J. Stachel, L. Waters, N. Xu, Y.C. Zhang, C. Zou
Texas A&M University	K. Wolf
Wayne State University	R. Bellwied, S. Bennett, T. Cormier, J. Hall, Q. Li, A. Lukaszew, R. Matheus, C. Pruneau
Yale University	S.V. Greene, B. Shiva Kumar, R. Majka, J. Mitchell, F. Rotondo, J. Sandweiss,
Spokesman:	**P. Braun-Munzinger**

Experiment 814 combines 4π calorimeter coverage with a high resolution forward spectrometer. Extreme peripheral collisions are investigated by making an exclusive study of projectile fragmentation processes induced by Coulomb excitation. Central collision, including transverse energy and charged particle multiplicity production and a search for hydrodynamic flow effects are also studied. In the forward spectrometer, spectra for protons, neutrons and eventually, pions and kaons are measured to provide a detailed picture of the stopping process. A search is made for neutral particles, possibly produced in central collisions. The possible production of strange matter in such collisions is studied. The target area calorimetry provides a reaction trigger while fragments are identified in the forward spectrometer by their momentum/charge, Time-Of-Flight, specific energy loss and kinetic energy. This includes a measurement of anti-proton production and a search for anti-nucleus production in such collisions.

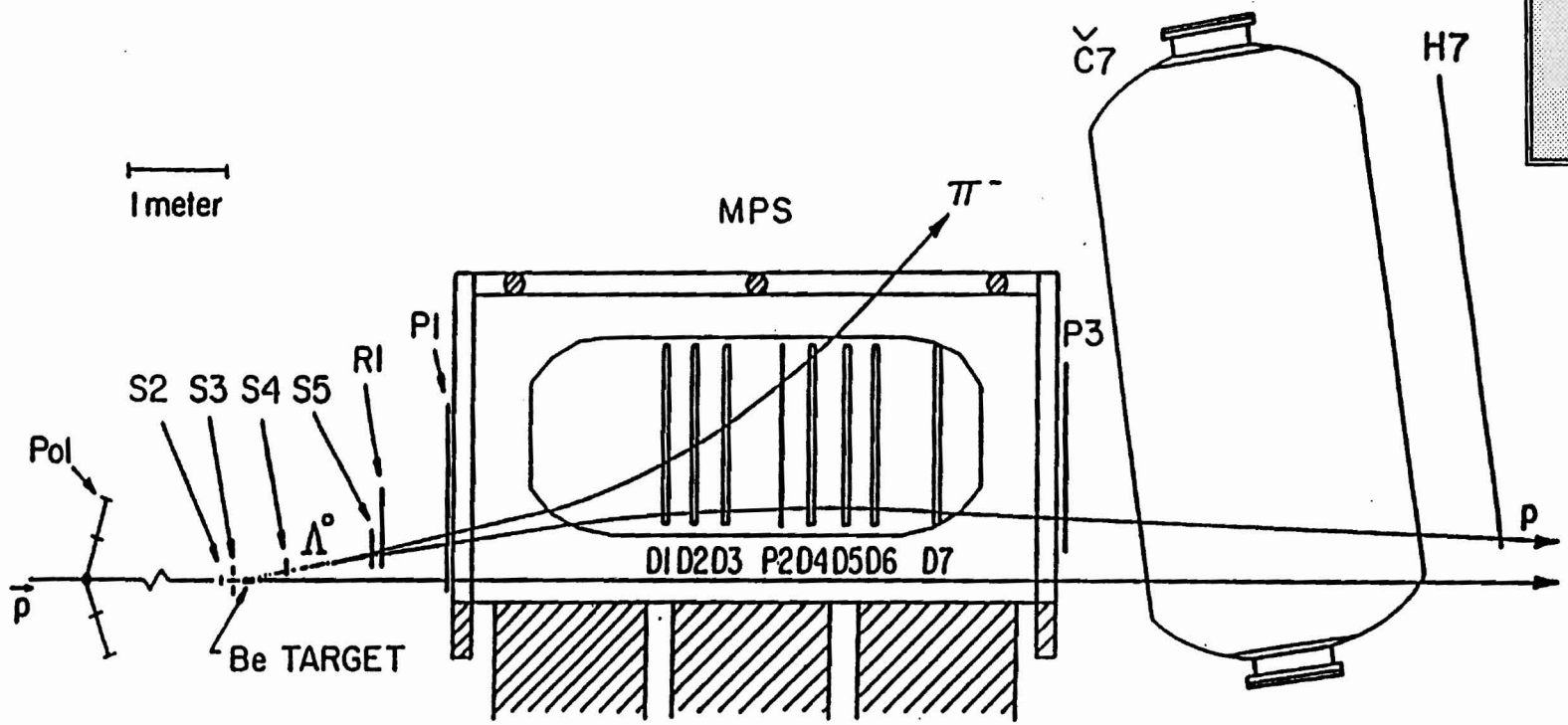

EXPERIMENTAL LAYOUT for E-817

Beam: A1
Status: Awaiting Polarized Proton Run
Hours Charged/Approved: 700/1300

EXPERIMENT 817 - POLARIZATION TRANSFER IN HYPERON PRODUCTION

Rice University	D.L. Adams, S. Ahmad, B.E. Bonner, J.A. Buchanan, J.M. Clement, M.D. Corcoran, H.E. Miettinen, G.S. Mutchler, J.B. Roberts, J. Skeens, P.M. Stevenson
Brookhaven National Laboratory	S.U. Chung, H. Willutzki
Johns Hopkins University	T. Hallman, L. Madansky
University of Arizona	K.A. Johns
Spokesmen:	**B.E. Bonner and J.B. Roberts**

Since the discovery that inclusively produced hyperons are polarized, the underlying cause of the effect has remained a mystery. No perturbative QCD predictions are possible for the kinematic range covered by experiment, but simple parton-based theories that explain the effect in terms of breaking of strings or Thomas precession of strongly accelerated quarks have had a remarkable degree of success in explaining the effect. This experiment aims to measure the hyperon polarization when produced by a polarized proton beam. The question being addressed is how much the hyperon polarization is influenced by that of the proton. The experiment has been performed for the case of lambdas produced by polarized protons at 13 and 18 GeV/c. In rough agreement with the model, the lambda polarization is independent of that of the proton ($D_{NN} \approx 0$) and the left-right asymmetry for lambda production is also near zero. A first mea-surement of these quantities for Σ^0 production has shown large deviations from the predictions of the model. We expect to continue the Σ^0 experiment to be able to make a definitive test of an extended model which we have proposed.

Experiment 821

G–2 π–μ BEAM

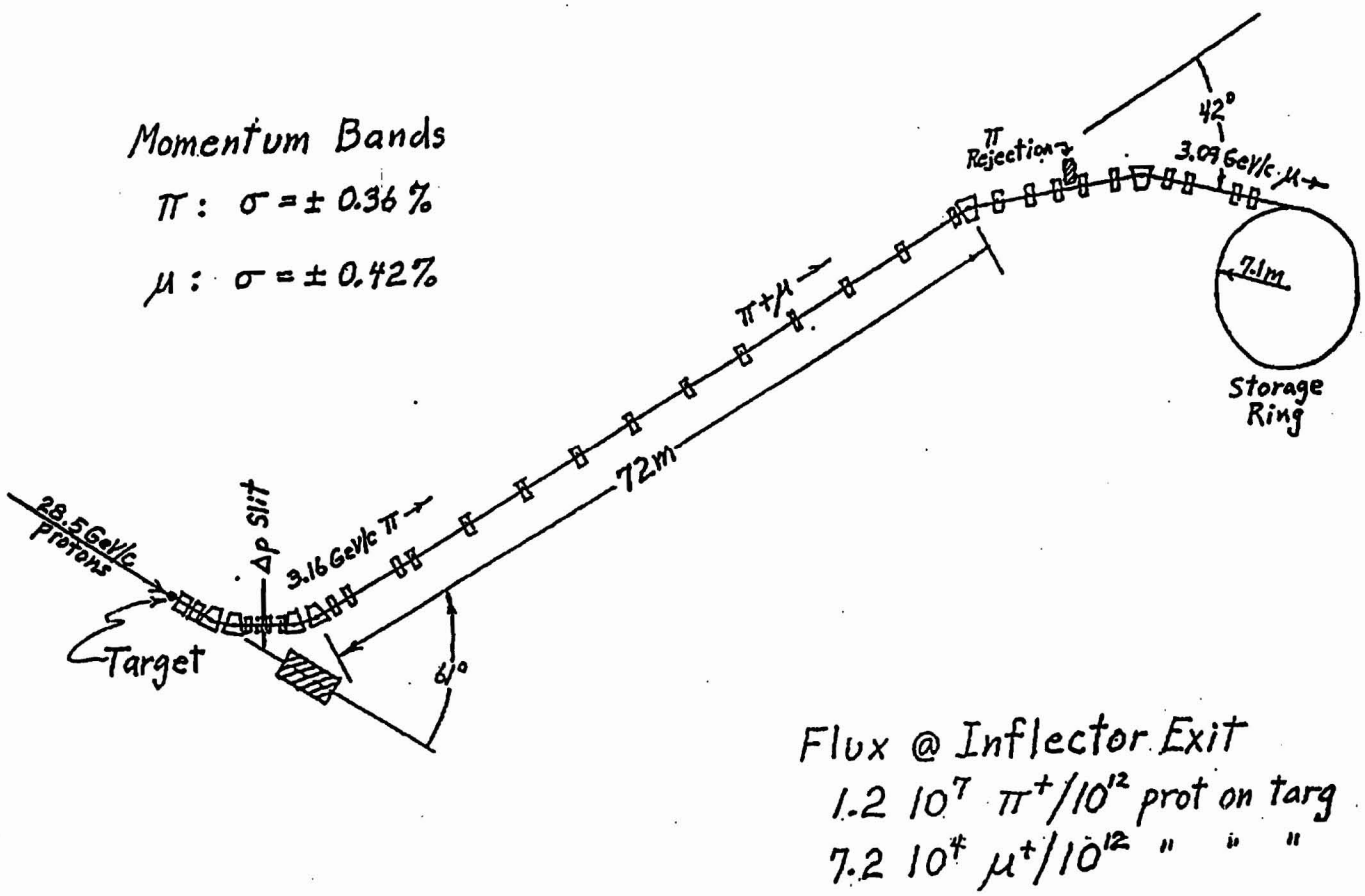

The anomalous gyromagnetic ratio of the muon (g-2) will be measured to 0.36 ppm or a factor of 20 times better than it is currently known. The predicted contribution to (g-2) from the first order $W^{\pm}$ and Z^0 radiative correction is predicted to be 1.7 ppm so this experiment will provide a direct test of the electroweak radiative correction, and hence of the renormalizability of the Glashow-Weinberg-Salam theory. Since a_{μ} is sensitive to a wide range of non-standard model effects there is a window in which to search for new physics. W or muon substructure, super-symmetry and the existence of new gauge bosons are several possibilities. A 14 m diameter superferric muon storage ring under construction will be completed in 1994. The plan is to be ready for data collection in FY 1996.

Beam: V1
Status: Construction
Hours Charged/Approved: 55/2100

Experiment 821 - A New Precision Measurement of the Muon g-2 at the Level of 0.35 PPM

Boston University	E. Benedict, D.H. Brown, R.M. Carey, E.S. Hazen, F. Krienen, Z. Liu, J.P. Miller, J. Ouyang, B.L. Roberts, L.R. Sulak, W. Worstell
Brookhaven National Laboratory	J. Benante, G. Bennett, H.N. Brown, G. Bunce, J.R. Cullen, Jr., G.T. Danby, C. Gardner, J. Geller, H-C. Hseuh, J.W. Jackson, L.X. Jia, R. Larsen, Y.Y. Lee, R. Meier, W.-Z. Meng, W.M. Morse, C. Pai, I. Polk, A. Prodell, S. Rankowitz, J. Sandberg, Y. Semertzidis, R. Shutt, L. Snydstrup, A. Soukas, A. Stillman, T. Tallerico, P.A. Thompson, F. Toldo, K. Woodle
Budker Institue for Nuclear Physics	L.M. Barkov, D.N. Grigoriev, B.I. Khazin, E.A. Kuraev, Yu.M. Shatunov, E. Solodov
Cornell University	T. Kinoshita, Y. Orlov
Fairfield University	D. Winn
University of Heidelberg	K. Jungmann, R. Prigl, P. von Walter, G. zu Putlitz
University of Illinois	P. Debevec, G. Garino, P. Harris, D. Hertzog, T. Jones
Lawrence Berkeley Lab./ Brookhaven National Lab.	M.A. Green
Los Alamos National Lab.	W.P. Lysenko
Max Planck Institut fur Med. Forschung, Heidelberg	U. Haeberlen
University of Minnesota	P. Cushman
National Laboratory for High Energy Physics (KEK)	K. Endo, H. Hirabayashi, S. Ichii, S. Kurokawa, K. Mashata, Y. Mizumachi, S. Sakamoto, T. Sato, A. Yamamoto
University of Riken	K. Ishida
University of Tokyo	K. Nagamine
Yale University	S.K. Dhawan, A.A. Disco, F.J.M. Farley, X. Fei, V.W. Hughes, S.I. Redin, Q. Xu
Spokesmen:	**V.W. Hughes, W.M. Morse, B.L. Roberts**

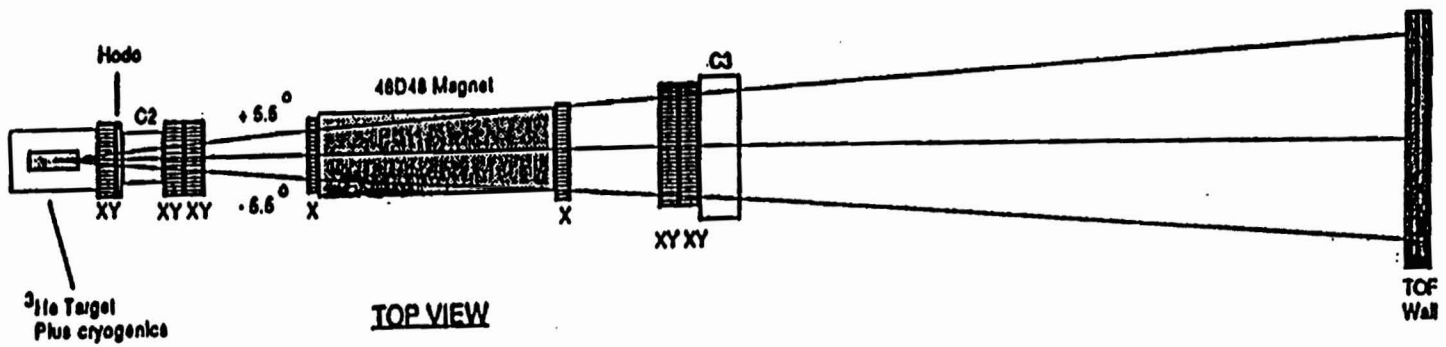

Experimental apparatus for ^{3}He target H particle search.

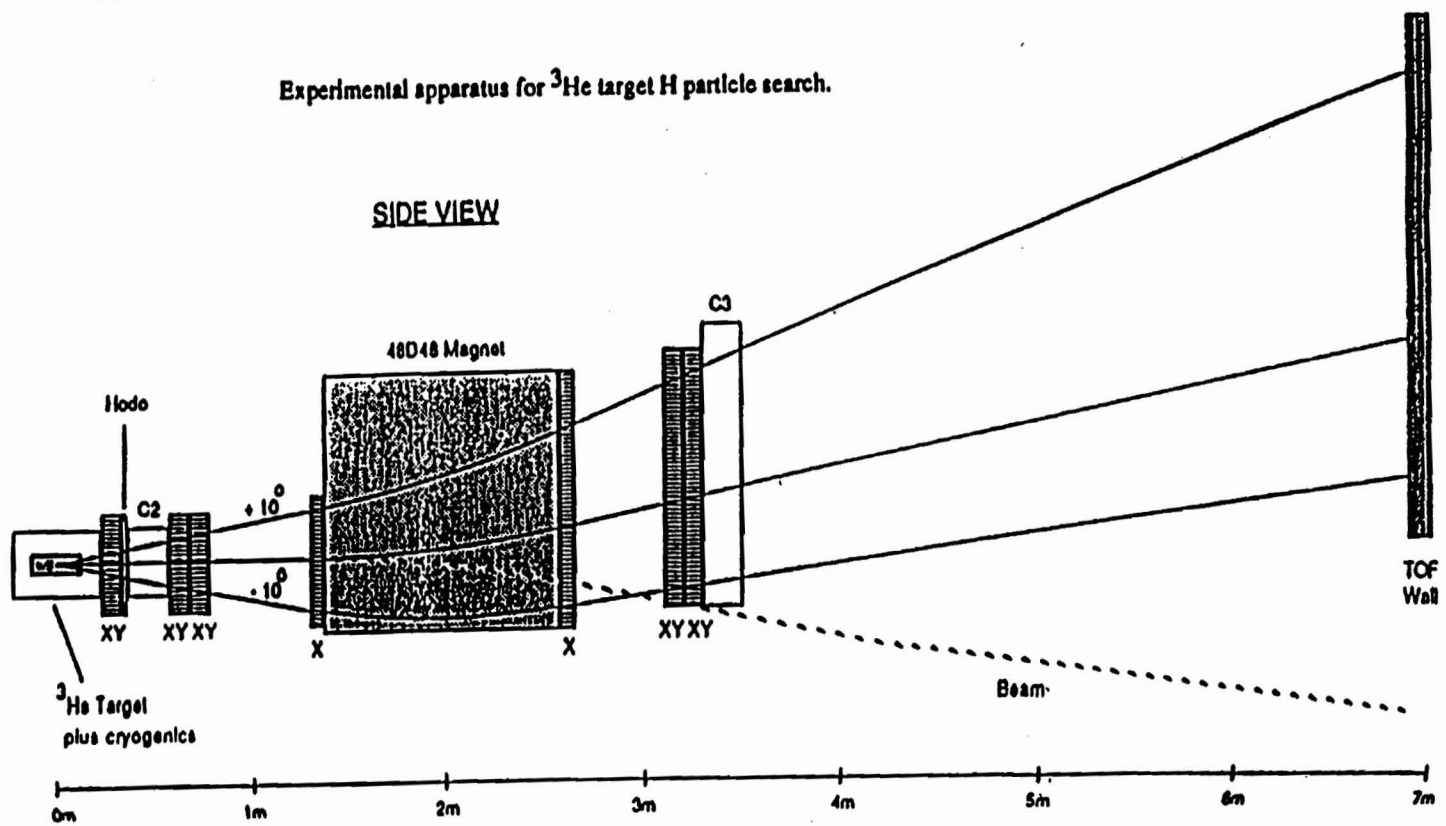

Beam: D6
Status: Completed 1994
Hours Charged/Approved: 932/700

EXPERIMENT 836 - SEARCH FOR A STRANGENESS -2 DIBARYON USING A ^{3}HE TARGET

Carnegie-Mellon University	A. Berdoz, G. Franklin, R. Magahiz, R. McCrady, F. Merrill, C. Meyer, B. Quinn, R. Schumacher, R. Sukaton, V. Zeps
University of Alberta	M. Rozon
University of Birmingham	J. Lowe, J. Nelson, R. Zybert
Brookhaven National Laboratory	R. Chrien, P. Pile, R. Sawafta, R. Sutter
Freiburg University	T. Buerger, M. Burger, H. Fischer, J. Franz, E. Rössle, H. Schmitt, M. Wieder
Indiana University Cyclotron Facility	J. Szymanski
University of Kyoto	H. Enyo, T. Iijima, K. Imai, N. Saito, S. Yokkaichi
Kyoto Sangyo University	K. Okada, F. Takeutchi
LAMPF	P. Barnes
University of Manitoba	C. Davis, L. Gan, M. Landry, L. Lee, S. Page, D. Ramsay, V. Sum, W. van Oers
University of New Mexico	B. Bassalleck, M. Chapman, A. Rusek, R. Stotzer, D. Wolfe
TRIUMF	D. Gill
Vassar College	R.L. Stearns
Yale University	G. Diebold
Spokesmen:	**G.B. Franklin and P.D. Barnes**

The two component target, used in the $(\Xi^-,d)_{atom}$ H search of Exp. 813 will be replaced with a single ^{3}He target used in the reaction $K^- + {}^3He \rightarrow K^+ + H + n$. With the ^{3}He target, greater sensitivity to a more tightly bound H is achieved. The ^{3}He target is to be considered a logical addition to the two component target measurement to extend the region of sensitivity to greater values of binding energy.

Experiment 844

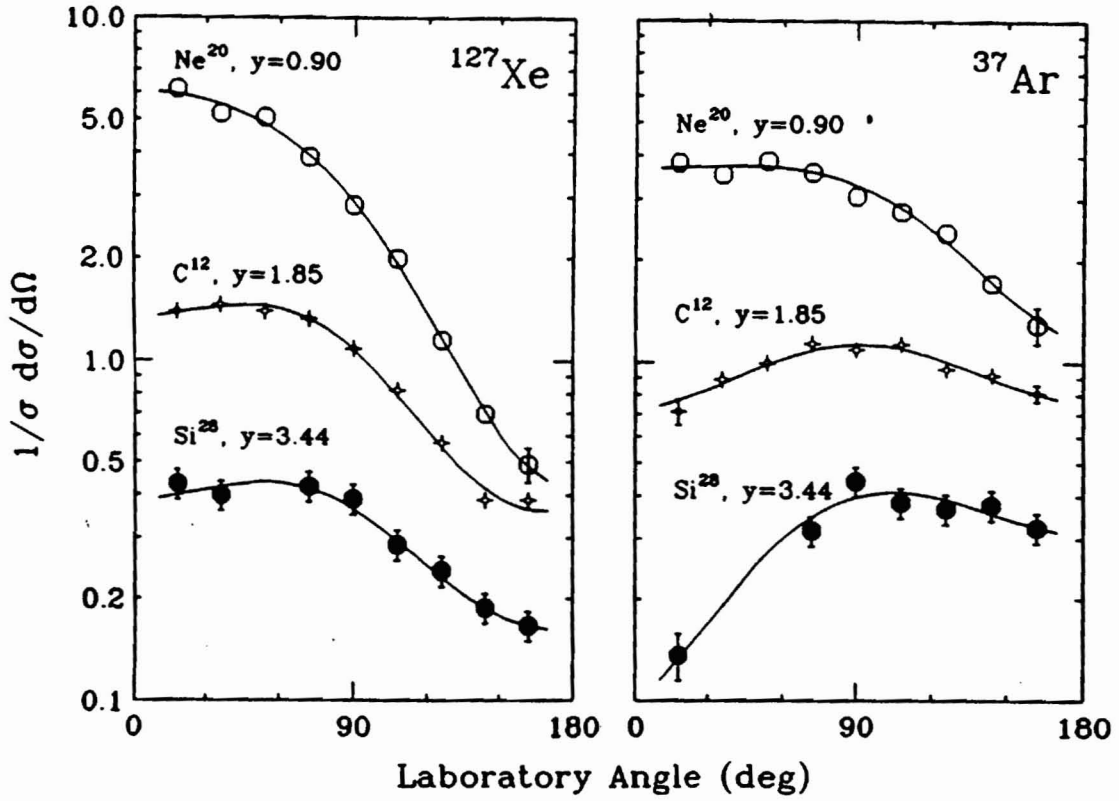

Evolution of angular distributions of Xe-127 and Ar-37 from the fragmentation of gold by heavy ions as a function of projectile rapidity, y. Filled points from AGS experiment E-844 are compared with existing data at Bevalac energies. Smooth curves indicate general trends. Note that the upper and lower data sets for each product are displaced by a factor of three from central set to simplify the display.

Beam: A
Status: Awaiting high intensity run
Hours Charged/Approved: 32/100

EXPERIMENT 844 - MEASUREMENT OF ANGULAR DISTRIBUTIONS FOR FRAGMENTS IN THE TARGET RAPIDITY REGION

Brookhaven National Laboratory	D. Beavis, J.B. Cumming, P.E. Haustein, R.W. Stoenner
Oregon State University	W. Loveland
Spokesman:	**J.B. Cumming**

Angular distributions have been measured for typical light (Ar-37) and heavy (Xe-127) products from the fragmentation of gold by 13.6-GeV/nucleon Si-28 ions. Preliminary results from the April 1992 running period are compared with existing data at Bevalac energies in the accompanying figure. Projectile rapidity, y, rather than its mass is expected to be the dominant variable determining the shape of a distribution. The E844 results, shown as filled points, indicate only small changes in the Xe-127 angular distribution between $y = 1.85$ and $y = 3.44$, consistent with the hypothesis of limiting fragmentation. In contrast, those for Ar-37 suggest a significantly increased suppression of fragments at forward angles for the $y = 3.44$ projectile. These results confirm the integral F/B measurements of AGS E825 which indicated an enhanced "backsplash" for light multifragmentation products which was not expected on the basis of existing studies of p-nucleus collisions up to 400 GeV or of nucleus-nucleus interactions at Bevalac energies. Unfortunately, technical problems led to loss of some E844 data, particularly for Ar-37 at forward angles, and additional measurements are anticipated.

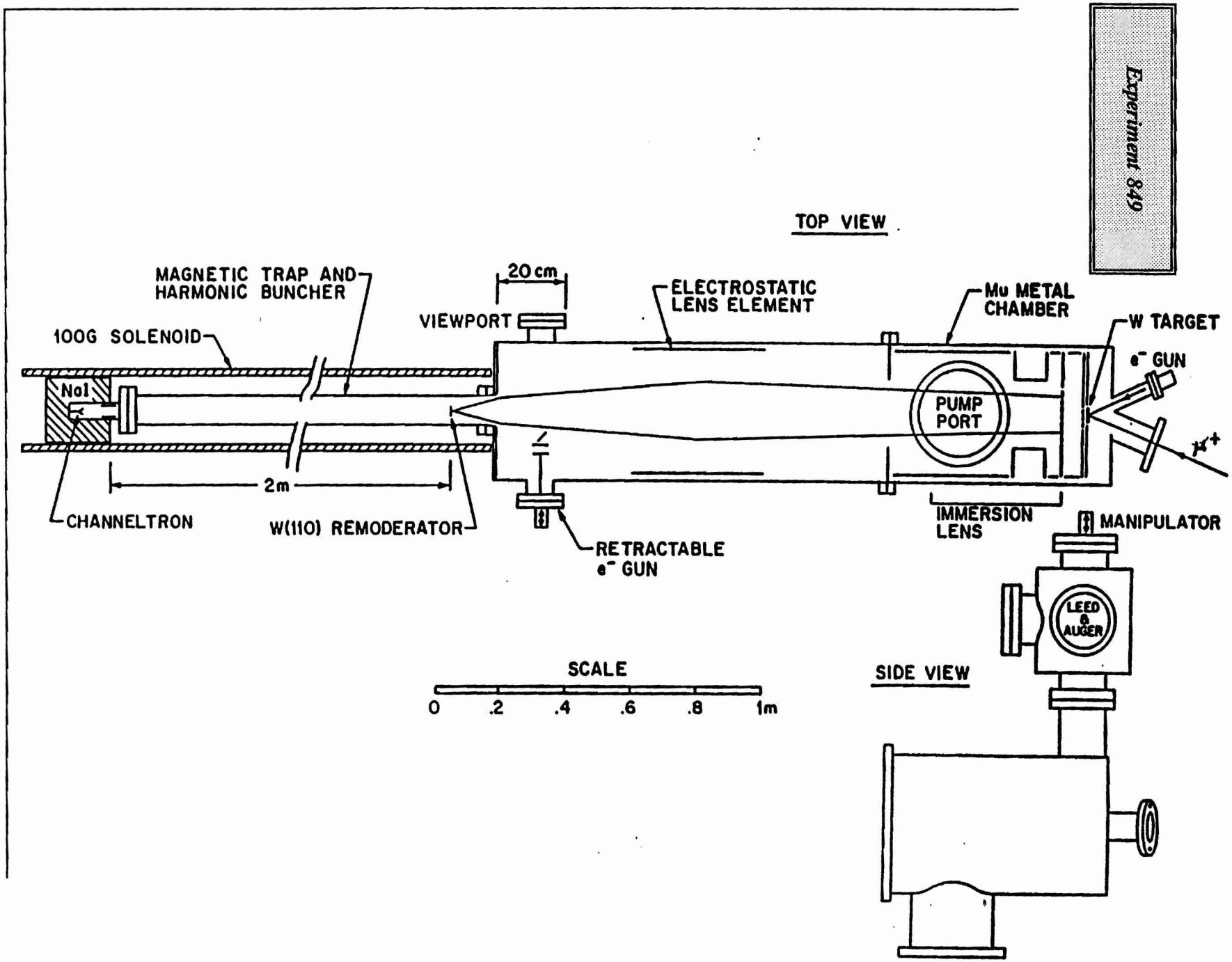
TOP VIEW
MAGNETIC TRAP AND HARMONIC BUNCHER
100G SOLENOID
NaI
CHANNELTRON
2m
W(110) REMODERATOR
20 cm
VIEWPORT
RETRACTABLE e⁻ GUN
ELECTROSTATIC LENS ELEMENT
Mu METAL CHAMBER
PUMP PORT
IMMERSION LENS
W TARGET
e⁻ GUN
μ⁺
MANIPULATOR
LEED & AUGER
SIDE VIEW
SCALE
0 .2 .4 .6 .8 1m

Beam: D2
Status: Approval Withdrawn 9/94
Hours Charged/Approved:0/200

EXPERIMENT 849 - SEARCH FOR MUONIUM TO ANTIMUONIUM CONVERSION

AT&T Bell Laboratories D.R. Harshman and A.P. Mills, Jr.

This experiment proposes to search for the spontaneous conversion of muonium (M) to antimuonium (M) in vacuum, by looking for the spectator orbital positron remaining after the decay of the μ^-. Important constraints will be placed on certain supersymmetric theories that allow the violation of lepton number conservation.

Experiment 850

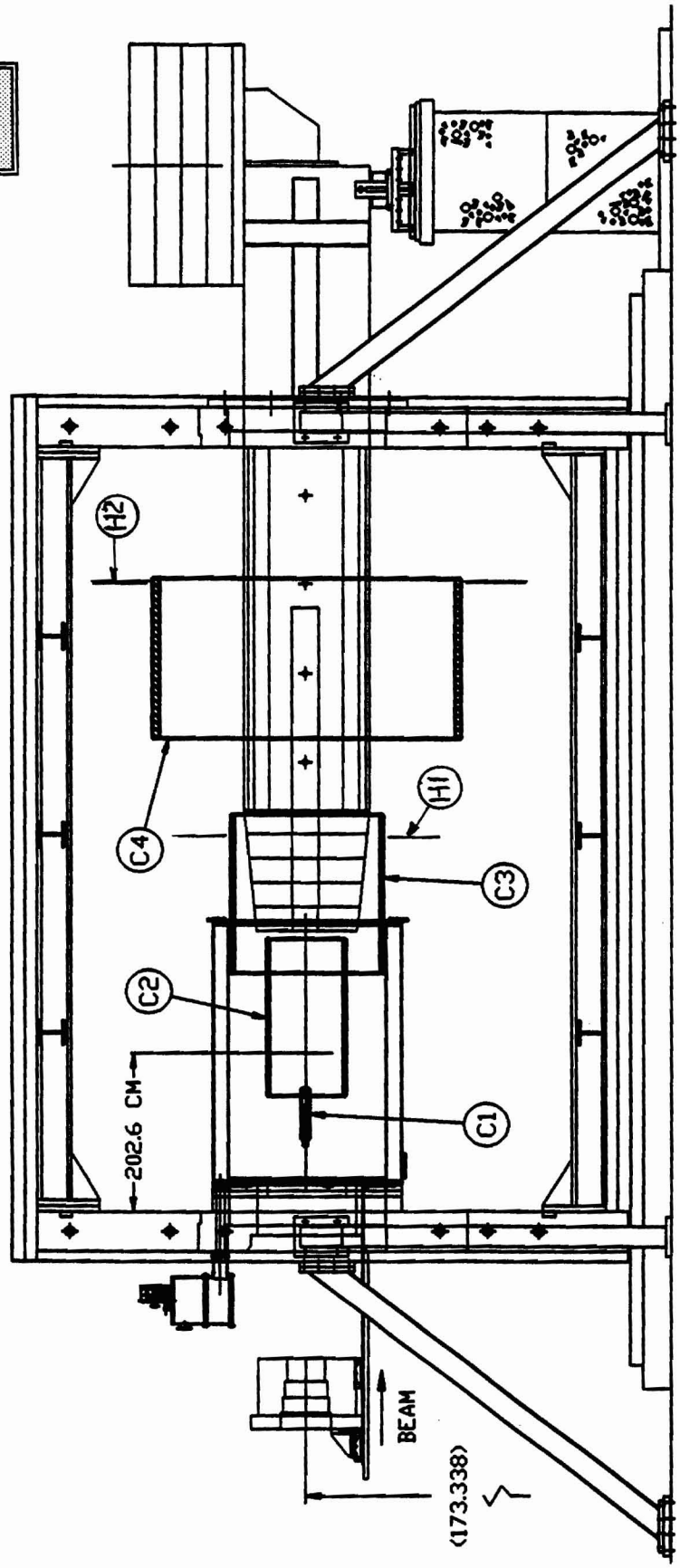

Beam: C1
Status: In progress
Hours Charged/Approved: 2253/4000

EVA, A SOLENOIDAL DETECTOR FOR LARGE ANGLE EXCLUSIVE REACTIONS EXPERIMENT 850 - DETERMINING COLOR TRANSPARENCY TO 22 GEV/C

University of Aukland	N. Christensen
Brookhaven National Laboratory	D.S. Barton, G. Bunce, A.S. Carroll, S. Gushue, M. Kmit, D.I. Lowenstein, Y.I. Makdisi
University of Minnesota	H. Courant, M.L. Marshak, C. White
Mt. Holyoke College	H. Nicholson, S. Sutton
Pennsylvania State University	S. Durant, S. Heppelmann, E. Minor, J.Y. Wu
Univ. of Massachusetts-Dartmouth	S. Baker, F. Barbosa, D. Martel, J.J. Russell
Tel-Aviv University	J. Alster, I. Mardor, Y. Mardor, E. Piasetzky
Spokesmen:	**A.S. Carroll and S. Heppelmann**

In order to extend the range and sensitivity of measurements of large angle exclusives scattering, a solenoidal detector, EVA, will be built. This new detector will increase the solid angle acceptance by a factor of 20 over the existing dipole detector and provide for 1% momentum measurements of outgoing 10 GeV/c particles. The initial experiment, 850, will allow the determination of nuclear transparency up to 22 GeV/c incident proton momentum. The additional momentum constraint derived from the measurement of both outgoing protons will produce a much improved signal to noise ratio. At 6 GeV/c, the missing energy will be ~ 50 MeV, allowing a partial separation of nuclear states. The solenoidal configuration provides an excellent geometry for studying a wide variety of two-body exclusive reactions near 90° in the center of mass. For example, reactions involving the two-body decays of neutral particles

$$\pi^+ n \rightarrow p X^\circ, \quad X^\circ \rightarrow \pi^+ \pi^-$$

will be very interesting.

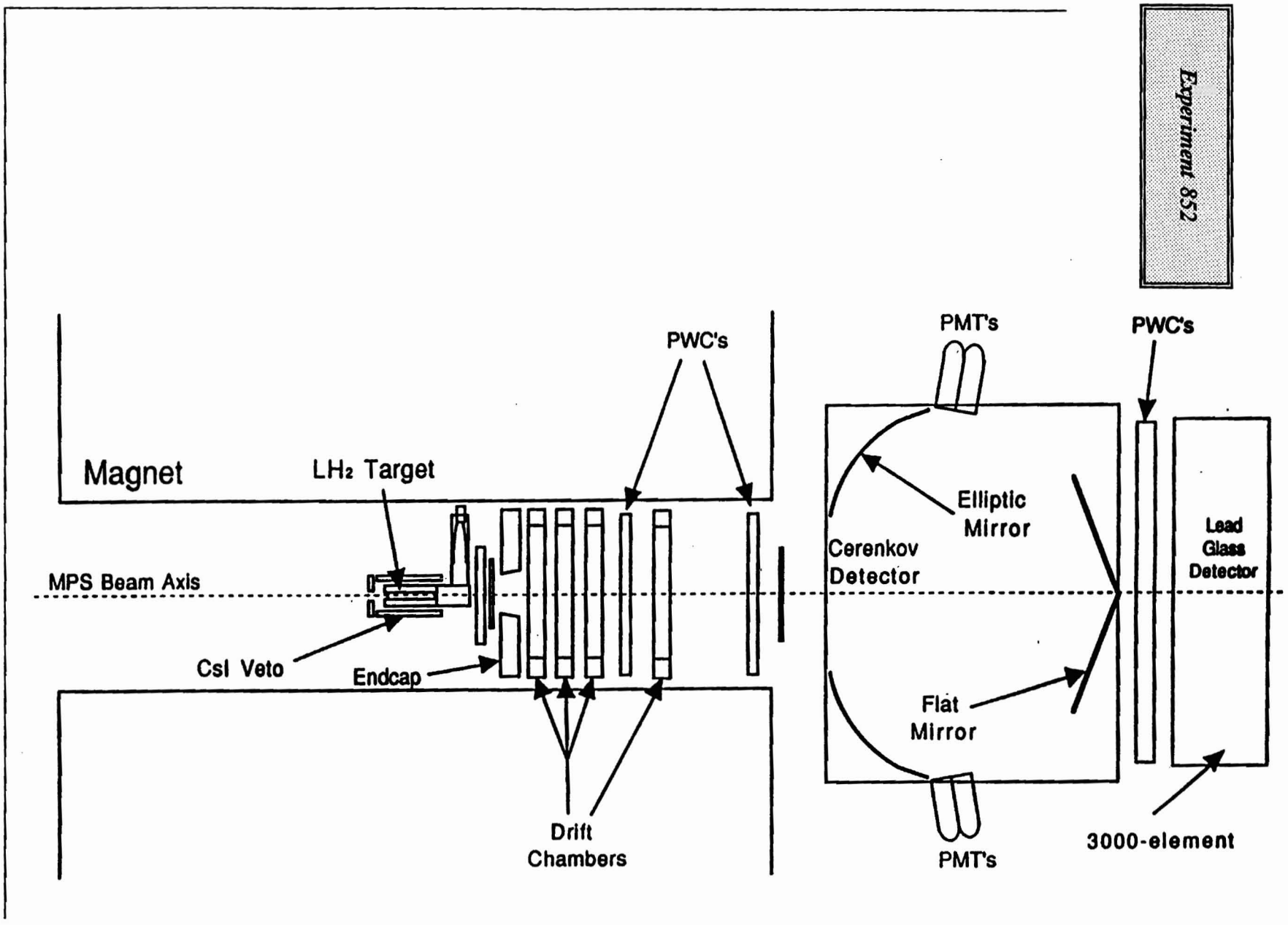
Experiment 852
Magnet
LH₂ Target
PWC's
PMT's
PWC's
Elliptic Mirror
Cerenkov Detector
Lead Glass Detector
MPS Beam Axis
CsI Veto
Endcap
Flat Mirror
Drift Chambers
PMT's
3000-element

Beam: A1
Status: Running
Hours Charged/Approved: 2152/3900

EXPERIMENT 852 - SEARCH FOR MESONS WITH UNUSUAL QUANTUM NUMBERS

Brookhaven National Laboratory	S.U. Chung, R. W. Hackenburg, K. Olchanski, D.P. W eygand, H.J. Willutzki
Indiana University	B.B. Brabson, R.R. Crittenden, A.R. Dzierba, J. Gunter, R. Lindenbusch, B. Kern, R. Lindenbusch, M. McKerley, D.R. Rust, E. Scott, P.T. Smith, T. Sulanke, S. Teige, D. Zieminska, Z. Ziliak
University of Louisville	C. L. Davis
University of Massachusetts-Dartmouth	Z. Bar-Yam, J. Dowd, P. Eugenio, W. Kern, E. King
Moscow State University	V..A. Bodyagain, A.M. Gribushin, O.L. Kodolva, V.L. Korotkikh, M.A. Kostin, A.I. Ostrovidov, A. Proskuryakov, L. I. Sarycheva, N. B. Sinev, I. N. Vardanyan, A. A. Yershov
Northwestern University	D. S. Brown, T. Pedlar, K. Seth, J. Wise, D. Zhao
University of Notre Dame	T. Adams, J.M. Bishop, N.M. Cason, J.M. LoSecco, J. J. Manak, A. Sanjari, W. D. Shephard, D. L. Stienike, S. A. Taeger, D.R. Thompson
Institute for High Energy Physics Protvino, Russia	S. Denisov, A. Dushkin, V. Kochetkov, I. Shein, A. Soldatov
Rensselaer Polytechnic Institute	G. Adams, J. Napolitano, M. Nozar, J. Smith, M. Witkowski,
Spokesmen:	**A. Dzierba and S.U. Chung**

Despite a number of experimental searches there is still no unambiguous candidate for a glueball, hybrid or four-quark state, although QCD predicts such objects. However, there are some tantalizing states, among them the M°(1405) which has exotic $J^{PC} = 1^{-+}$ and the scalar G(1590) which has unusual branching ratios for a quark-antiquark state.

The experimenters will study these and other states, concentrating on decay modes of mesons with multi-photons and 0, 1 or 2 charged particles. The detector is built around the MPS. The target will be surrounded by a CsI veto, charged particle detectors and a scintillation counter. The target will be followed by charged particle detectors, a Cerenkov counter and a 3000-element lead glass calorimeter to detect photons from meson decays.

Experiment 856

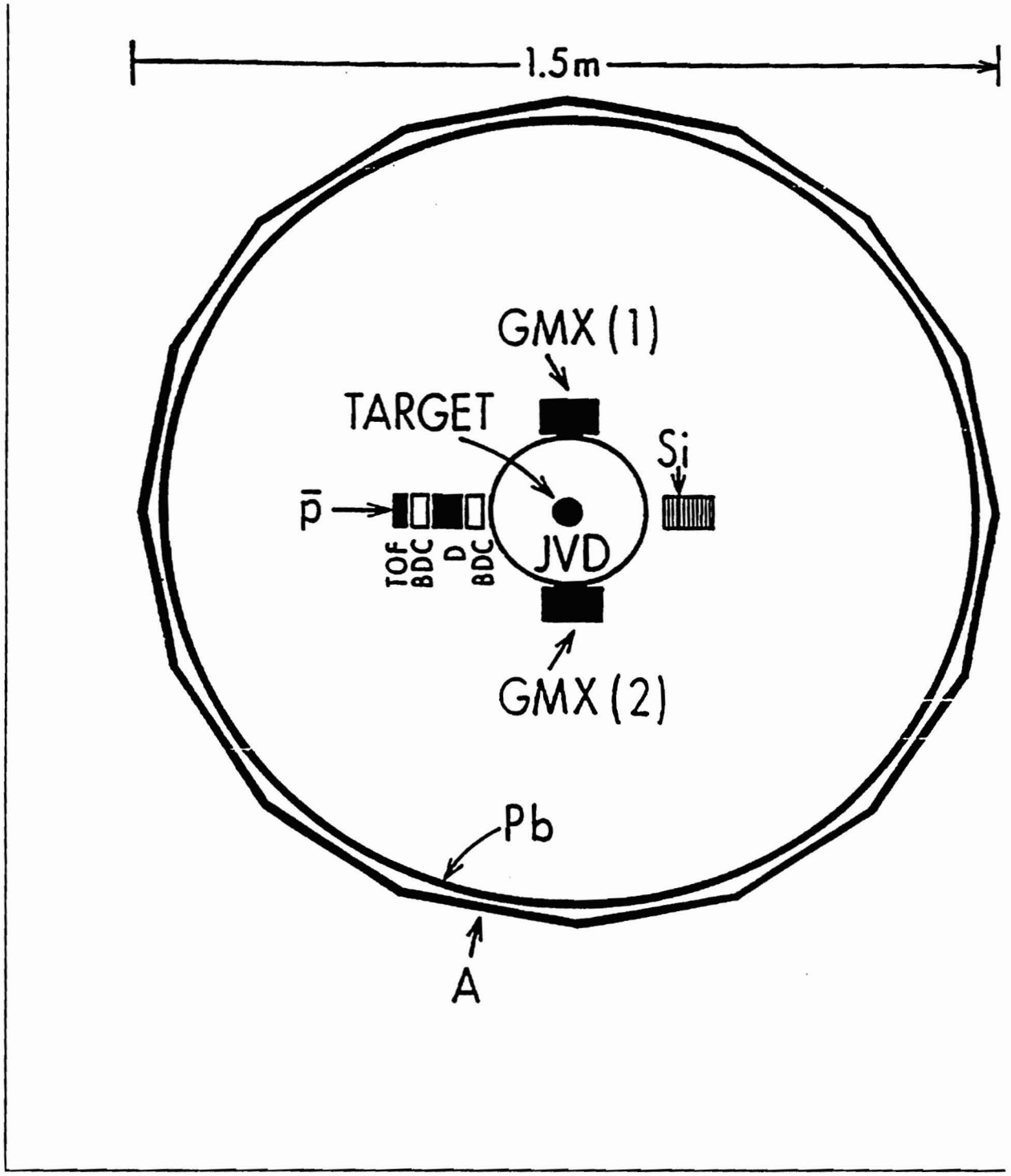

Beam: C8
Status: Approved pending funding
Hours Charged/Approved: 0/600

EXPERIMENT 856 - EXPLORATION OF THE BIOMEDICAL POTENTIAL OF ANTIPROTONS

Brookhaven National Laboratory	S. Bart, G. Bennett, R. Chrien, M. Sakitt, R. Sawafter, R. Sutter
Case Western Reserve University	W. Fickinger, D.K. Robinson
Harvard Cyclotron Laboratory	A. Koehler
Loma Linda University	J. Archambeau
University of Massachusetts	A.B. Brill
Syracuse University	T. Kalogeropoulos, J. Reed, Z. Sobolewski
SUNY Health Science Center	D. Bassano, S. Manglos, S.C. Prasad
Spokesman:	**T. Kalogeropoulos**

The potential of antiprotons for practical applications within present antiproton collection capabilities is promising. Suggested applications include direct 3D electron density imaging, 3D multi-elemental imaging, guiding precise and easy delivery of ion beams to targets, and radiation therapy.

In this initial phase of the research, the following physics questions will be addressed: (a) Comparison of antiproton capture rates in complex targets with the Z-law; (b) Studies of the annihilation mechanism in nuclei. These studies of physics interesting on their own right will provide as well basic information in evaluating the proposed applications.

Experiment 859

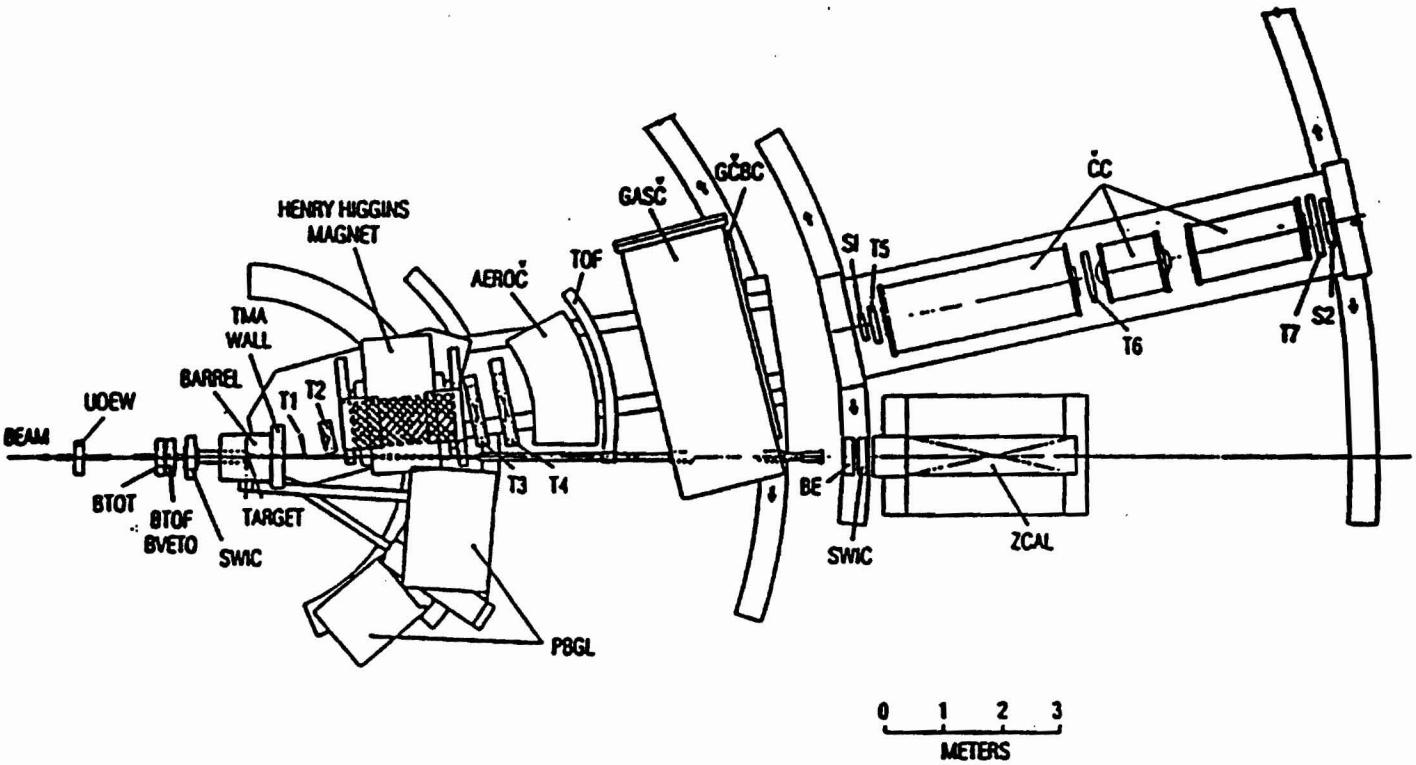

This heavy ion experiment will extend the inclusive cross section measurements of E802 over a significantly larger kinematic range and perform high-precision two-particle measurements on particles produced in nucleus-nucleus collisions. The goal is to provide a comprehensive body of data on inclusive (π, K, p, d) and two-particle corrections ($\pi\pi$, K^+K^+ and pp) which may provide insight into the forma-tion of high density nuclear matter, its subsequent space-time evolution, source kinematics and possible thermodynamic properties.

Beam: B1
Status: Completed in 1992
Hours Charged/Approved: 1644/1500

EXPERIMENT 859 - STUDIES OF HIGH-DENSITY BARYON MATTER FROM EXTENDED MEASUREMENTS OF PARTICLE MOMENTUM DISTRIBUTIONS AND FROM HIGH-PRECISION TWO-PARTICLE CORRELATIONS

Argonne National Laboratory	S. Kaufman
Brookhaven National Laboratory	D. Beavis, C. Chasman, Z. Chen, Y.Y. Chu, J.B. Cumming, R. Debbe, M. Gonin, S. Gushue, O. Hansen, S. Hayashi, M.J. LeVine, B. Moskowitz, J. Olness, L.P. Remsberg, D. Roehrich, M.J. Tannenbaum, J.H. van Dijk, F. Videbaek, H. Wegner
Columbia University	C. Y. Chi, B. Cole, S. Nagamiya, T. Nayak, P. Stankus, O. Vossnack, F.Q. Wang, Y. Wang, Y.D. Wu, X. Yang, W.A. Zajc
University of Tokyo (INS)	Y. Akiba, H. Hamagaki, S. Homma
Kyoto University	H. Kaneko
Kyushu University	Y. Tanaka
Lawrence Livermore National Laboratory	H.C. Britt, J. Costales, N. Namboodiri, T.C. Sangster, J. Thomas, S. Tonse
Massachusetts Institute of Technology	V. Cianciola, W.L. Kehoe, R.J. Ledoux, D. Morrison, R.J. Morse, C.G. Parsons, P. Rothschild, R. Soltz, S.G. Steadman, G.S.F. Stephans, T. Sung, V. Vutsadakis, D.S. Woodruff, D. Zachary
New York University	B. Budick
University of California Space Sciences Laboratory	H.J. Crawford, J. Engelage
University of California at Riverside	P. Beery, S.-Y. Fung, J. Kang, R. Seto
University of Tokyo	R. Hayano, H. Sakurai
University of Tsukuba	K. Kurita, Y. Miake
Spokesmen:	**L.P. Remsberg and W.A. Zajc**

Experiment 862

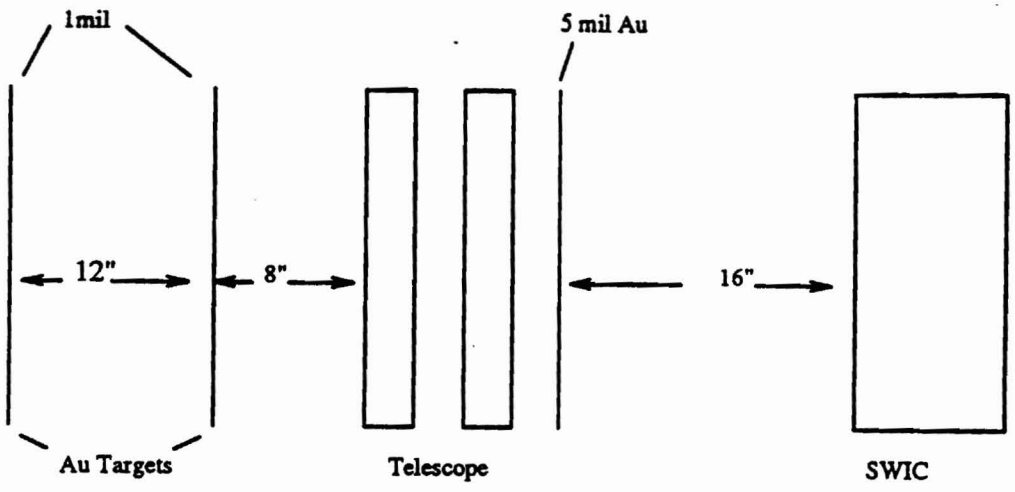

Schematic diagram of target array for low beam intensity bombardments.

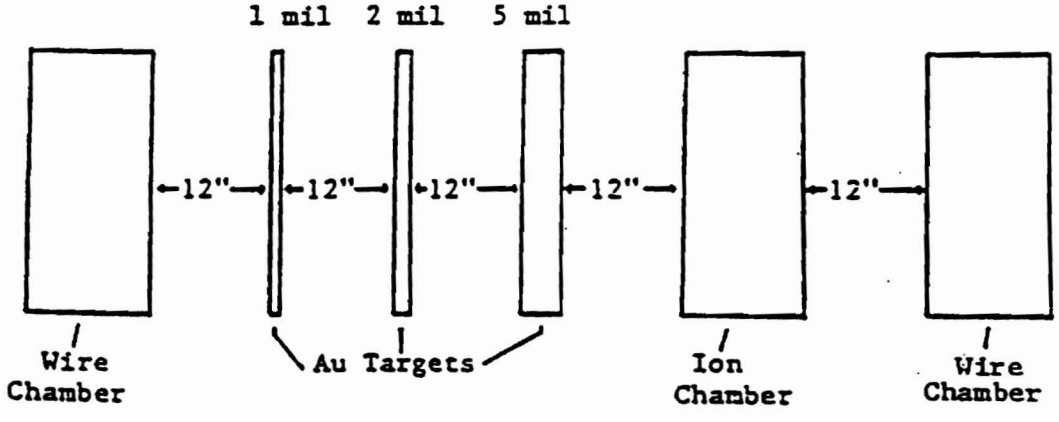

Schematic diagram of target array for high beam intensity bombardments.

Beam: A/B1
Status: Au beam completed 1993;
La to be scheduled
Hours Charged/Approved: 42/36

EXPERIMENT 862 - ELECTROMAGNETIC DISSOCIATION OF ^{59}CO AND ^{197}AU BY ^{139}LA AND ^{197}AU

Iowa State University L. Ewell, J.C. Hill, B. Libby, F.K. Wohn

Brookhaven National Laboratory J.B. Cumming

Spokesman: **J.C. Hill**

Electromagnetic Dissociation (ED) is a purely electromagnetic process occurring in relativistic heavy ion (RHI) reactions in which the Coulomb field of one of the participants generally excites a giant resonance in the other. The most likely decay channel for heavy nuclei is by one-neutron emission. ED was first reported in accelerator experiments (projectile fragmentation) by Heckman and Lindstrom and for target fragmentation by this experimental group. The ED cross section for the reaction ^{197}Au(^{238}U, X)^{196}Au at 0.96 GeV/nucleon was measured to be 3.16 ± 0.23 barns. The experimenters are extending their measurements of the ED process to higher energies by measuring yields of target fragments from the collision of ^{139}La and ^{196}Au projectiles on ^{59}Co and ^{197}Au targets. Preliminary analysis of the data from high and low intensity bombardments yields an ED cross section of 9.7 barns for the ^{197}Au (^{197}Au, X) ^{196}Au reaction using ^{197}Au projectiles from the AGS.

Experiment 863

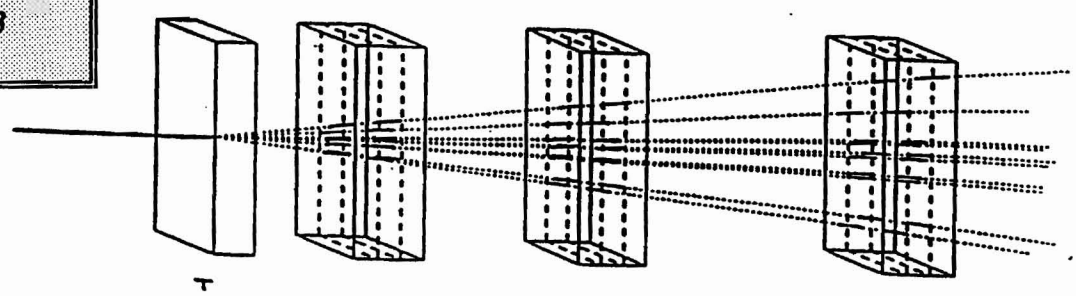

Emulsion chamber with double coated plates.

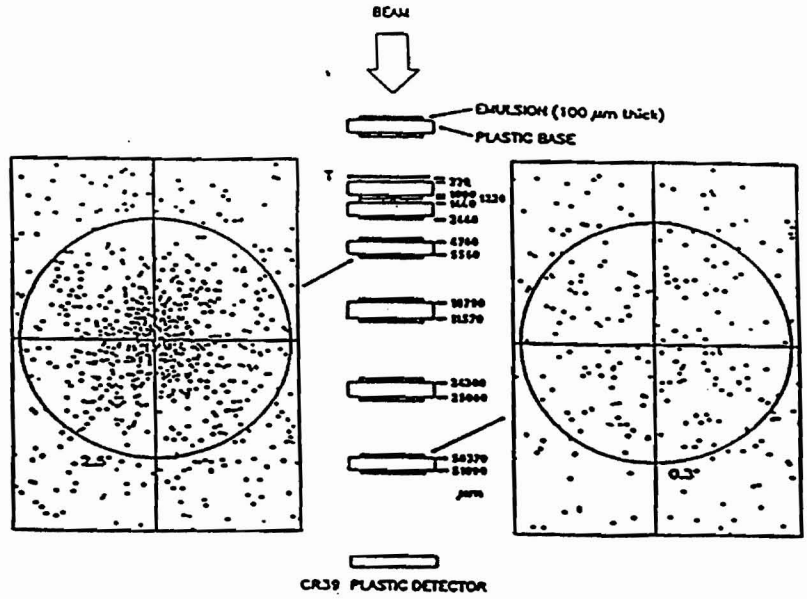

Simulated Pb-Pb event at 160 A Gev.

T=target

In E863, nuclear emulsions are used as detectors to study ultrarelativistic heavy-ion interactions. The principal aim of the experiment is to investigate global aspects of multiparticle production like the mass and energy dependence of charged particle multiplicities, angular distributions of charged particles, and target and projectile break-up. The experiment, however, also focuses on local particle density fluctuations. Indications of a Quark Gluon Plasma phase transition in terms of high overall particle densities combined with large local fluctuations are studied.

Within the collaboration two complementary techniques are used, each with its own advantages. The conventional technique with horizontally exposed stacks is predominantly used for obtaining minimum bias data, and for special studies of the target break-up. In order to gain maximal resolution in interactions of extreme multiplicities, where many particle are produced in a narrow forward cone, the use of vertically exposed emulsion chambers facilitates the measurement.

Beam: A3/B1
Status: Completed 1993
Hours Charged/Approved: 30/25

EXPERIMENT 863 - AU BEAM EXPOSURES FOR E815: PARTICLE PRODUCTION AND NUCLEAR FRAGMENTATION IN COLLISIONS OF HEAVY IONS IN NUCLEAR TARGETS AT AGS ENERGIES

Alma Ata, Institute of High Energy Physics	N.P. Andreeva, Z.V. Anzon, V.I. Bubnov, I.Y. Chasnicov, G.Z. Eligbaeva, L.E. Eremenko, A.S. Gaitinov, G.S. Kalyachkina, E.K. Kanygina, A.M. Seitimbetov, C.I. Shakova
Beijing, Acadmica Sinica	P.Y. Zheng
Chandigarh, Panjab Univ.	M.M. Aggarwal, R. Arora, V.S. Bhatia, I.S. Mittra
Changsha, Hunan Ed. Inst.	Y.X. Li, L. Liang, Z.G. Liu, Z.Q. Weng, Y.L. Xia
Dubna, Joint Institute for Nuclear Research	S.A. Krasnov, J.J. Musulmanbekov, G.S. Shabratova, K.D. Tolstov
Jaipur, University of Rajasthan	K.B. Bhalla, S.K. Gupta, V. Kumar, S. Lokanathan, S. Mookerjee, R. Raniwala, S. Raniwala
University of Jammu	S.K. Badyal, A. Bhasin, V.K. Gupta, S. Kachroo, S. Kitro, L.K. Mangotra, N.K. Rao
Košice, Šafarik University	L. Just, M. Karabova, M. Tothova, S. Vokal, J. Vrlakova
Linfen, Shanxi Normal	X. Chan, S.B. Luo, Y.M. Qin, D.H. Zhang
University of Lund	S. Garpman, B.Jakobsson, J.Nystrand, I. Otterlund, K. Soderstrom, E.Stenlund
Marburg, Phillips University	E.R. Ganssauge, C. Graf, M. Ochs, M. Roeper
Moscow, Lebedev Institute	M.I. Adamovich, Y.A. Alexandrov, M.M. Chernyavski, S.G. Gerassimov, S.P. Kharlamov, V.G. Larionova, N.V. Maslennikova, G.I. Orlova, N.G. Peresadko, N.A. Salmanova, M.I. Tretyakova
St. Petersburg, Khlopin Radium Institute	V.G. Bogdanov, V.A. Plyuschev, Z.I. Solovieva
Seattle, Univ. of Washington	T.H. Burnett, J.G. Grote, J.J. Lord, D. Skelding, R.J. Wilkes
Sydney, Univ. of Sydney	A.M. Bakich, L.S. Peak
Tashkent, Institute of Nuclear Physics	E.S. Basova, I.K. Bazarov, D.A. Carshiev, S.Z. Nasyrov, N.V. Petrov, T.P. Trofimova, U.I. Tuleeva, B.P. Tursunov
Tashkent, Physical-Technical Institute	L.P. Chernova, K.G. Gulamov, N.S. Lukicheva, V.S. Navotny, N. Saidkhanov, S.N. Shpilev, E.L. Surin, L.N. Svechnikova, S.I. Zhochova
Wuhan, Hua-Zhong Normal University	X. Cai, Z.R. Hu, Y.D. Li, L.S. Liu, Y.L. Lu, W.Y. Quian, H.Q. Wang, C.B. Yang, D.C. Zhou, J.C. Zhou
Yerevan, Physics Institute	F.A. Avetyan, N.A. Marutyan, L.G. Sarkisova, V.R. Sarkisyan
Spokesmen:	**R.J. Wilkes (U.S.) and I. Otterlund (Overall)**

E864, *Strangelet Search Experiment*

The E864 "Spectrometer" measures

- Charge (Z) and Mass (M)
- Strangelets from $M > 7$ GeV/c² with $Z/M < 0.3$ e/GeV/c²

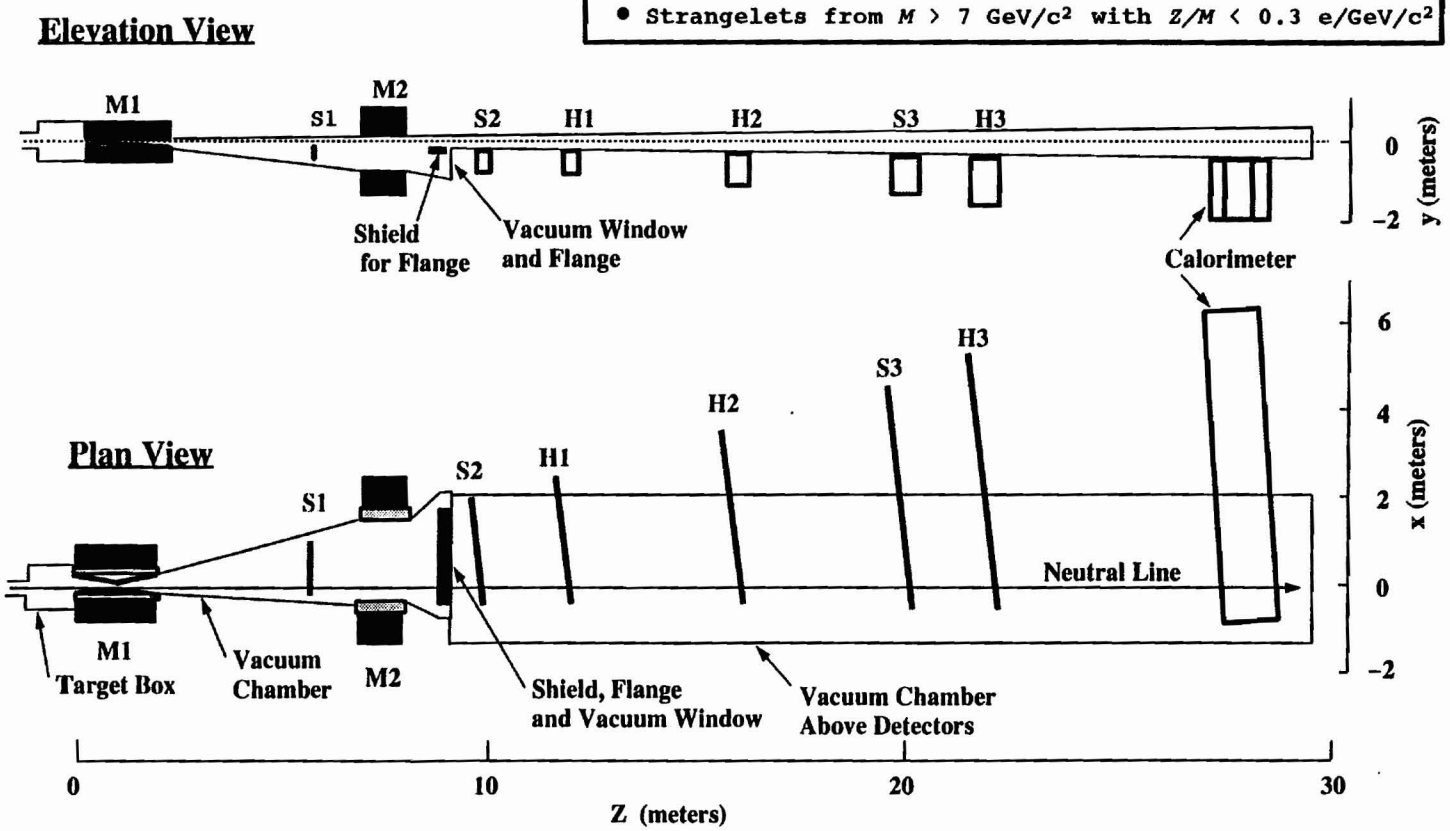

M1 & M2 = dipole spectrometer magnets
H1,H2 & H3 = scintillation hodoscopes
S1,S2 & S3 = straw tube arrays

Beam: A3
Status: In Progress
Approved Hours: 560/3500

EXPERIMENT 864 - PRODUCTION OF RARE COMPOSITE OBJECTS IN RELATIVISTIC HEAVY ION COLLISIONS

Brookhaven National Laboratory	C. B. Dover, T. G. Throwe
Iowa State University	L. Ewell, J. C. Hill, B. Libby, F. K. Wohn
Ames Laboratory	H. Skank, G. Sleege
Massachusetts Institute of Technology	E. S. Hafen, P. Haridas, I. Pless
Penn State University	T. Armstrong, R. A. Lewis, G. A. Smith
Purdue University	R. M. Davies, A. S. Hirsch, H. Z. Huang, N. T. Porile, R. P. Scharenberg, B. K. Srivastava, B. C. Stringfellow, M. L. Tincknell
University of Bari, Italy	P. Spinelli
University of Massachusetts	M. S. Z. Rabin
Vanderbilt University	V. S. Greene
Wayne State University	R. Bellwied, B. Bennett, T. Cormier, J. Hall, C. Pruneau
Yale University	K. Barish, M. Bennett, G. E. Diebold, J. Germani, J. Lajoie, R. D. Majka, J. Nagle, J. K. Pope, F. S. Rotondo, J. Sandweiss, B. Shiva Kumar, A. J. Slaughter, E. J. Wolin
Spokesman:	**J. Sandweiss**

The experimenters propose to carry out a systematic set of measurements and searches for "composite" objects produced in high energy heavy ion collisions. These measurements are aimed at studies utilizing the heaviest ions available at the AGS, presumably, up to and including gold ions. Part of the study will involve lighter beams and these could be done at an earlier time, with perhaps an initial detector complement. A major focus of the experiment is on charged composites; however, studies of neutral systems are also considered significant in the study. The experiment is designed to study particles produced in the central region of rapidity which are produced in central collisions. Since composite systems must be produced by the overlap of particles produced in the collision, it is expected that composites will be made mostly in the central rapidity region where overlaps would be most probable.

Experiment 865

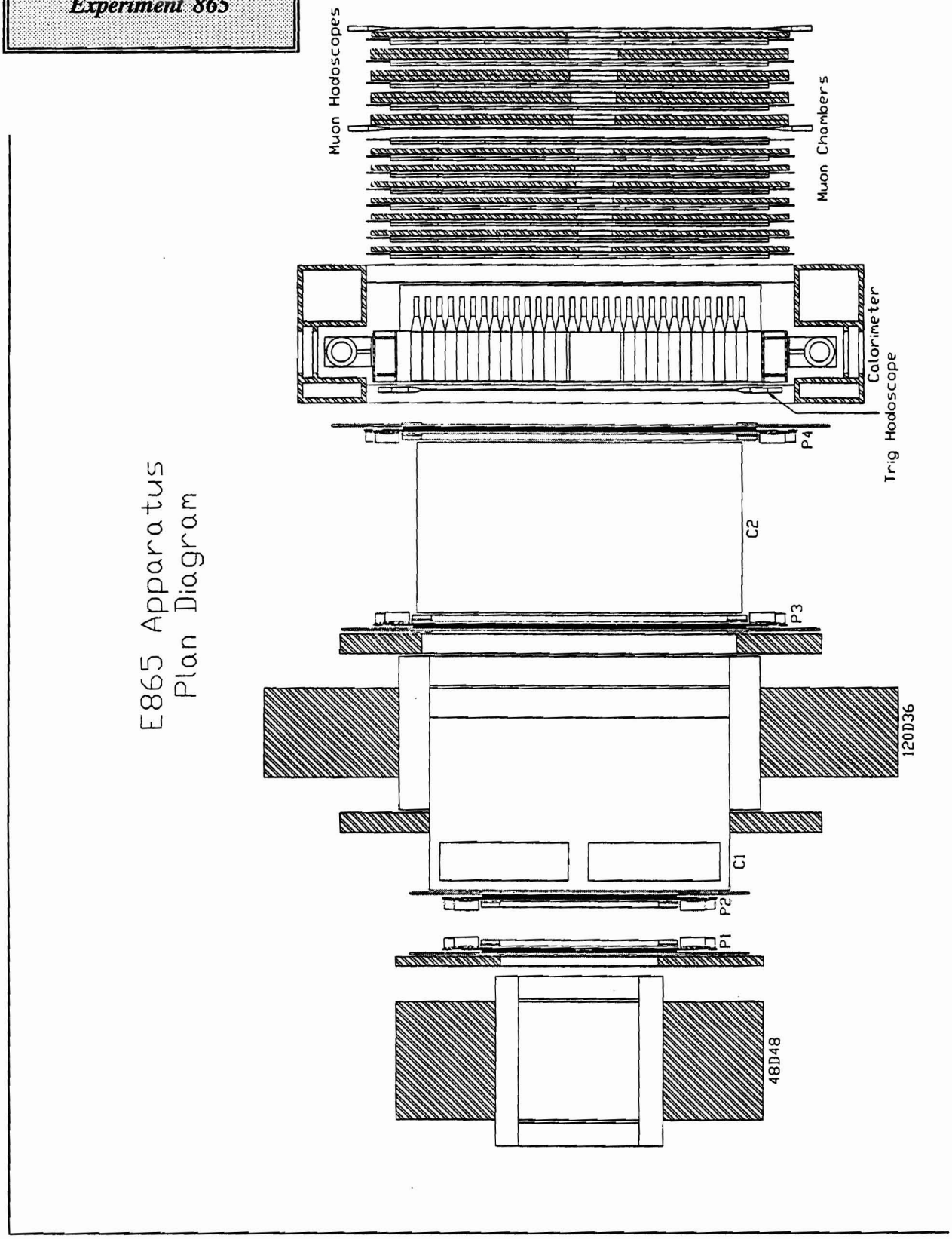

Beam: A1
Status: Running
Hours Charged/Approved: 617/4500

EXPERIMENT 865 - PROPOSAL TO PERFORM AN IMPROVED SEARCH FOR THE DECAY $K^+ \rightarrow \pi^+ \mu^+ e^-$

Brookhaven National Laboratory	D. Lazarus, L. Leipuner, H. Ma, B. Maguro, P. Rehak
University of Bern	J. Gasser
University of Connecticut	J. Lozano
Institute for Nuclear Rearch, Academy of Sciences of Russia (Moscow)	G. S. Atoian, S. N. Gninenko, V. V. Issakov, A. A. Poblaguev, V. Postoev
Joint Institute for Nuclear Research, Dubna	B. Z. Zalikhanov
University of New Mexico	J. Armendariz, B. Bassalleck, S. Eilerts, H. Fischer, J. Lowe, R. Stotzer, D. Wolfe
Paul Scherrer Institute	W. Djordjadze, J. Egger, W. D. Herold, H. Kaspar, H. Weyer
University of Basel	W. Menzel
University of Pittsburgh	C. Felder, B. Giles, D. E. Kraus, J.A. Thompson
High Energy Physics Inst. Tibilsi State University	N. Amaglobeli, Y. Bagaturia, V. Lebedev, D. Mazavia, A. Proskurjakov, T. Sachelashvili
Yale University	R. Appel, D. Bergman, S. Dhawan, W. Majid, H. Do, M.E. Zeller
University of Zurich	S. Pislak, P. Robmann, P. Truoel
Spokesman:	**M. E. Zeller**

The experimenters propose to perform a new search for the decay $K^+ \rightarrow \pi^+ \mu^+ e^-$ with a sensitivity of $\sim 3 \times 10^{-12}$ (90% C.L.). The method employed is the same as that of the previous experiment, E777. That experiment achieved a sensitivity of 2.1×10^{-10}. The improvement of a factor of approximately 70 comes from the following factors: improved K^+ beam x7; larger acceptance apparatus x3; longer data acquisition period x2.3; improved hardware and software efficiency x1.5. In addition to the search for $K^+ \rightarrow \pi^+ \mu^+ e^-$, the experimenters will: collect 50,000 events from the decay $K^+ \rightarrow \pi^+ e_+ e^-$; will have the potential to measure the CP violating component of the polarization of the μ^+ in the decay $K^+ \rightarrow \pi^+ \mu^+ \mu^+$ with a precision of $\sim 10\%$ and will have the potential to measure the CP violating asymmetries in the decays $K^\pm \rightarrow \pi^+ \pi^- \pi^\pm$ with a statistical precision of 10^{-5}. The experiment is scheduled for a commissioning run in 1993 followed by data taking in 1994 until completed.

Experiment 866

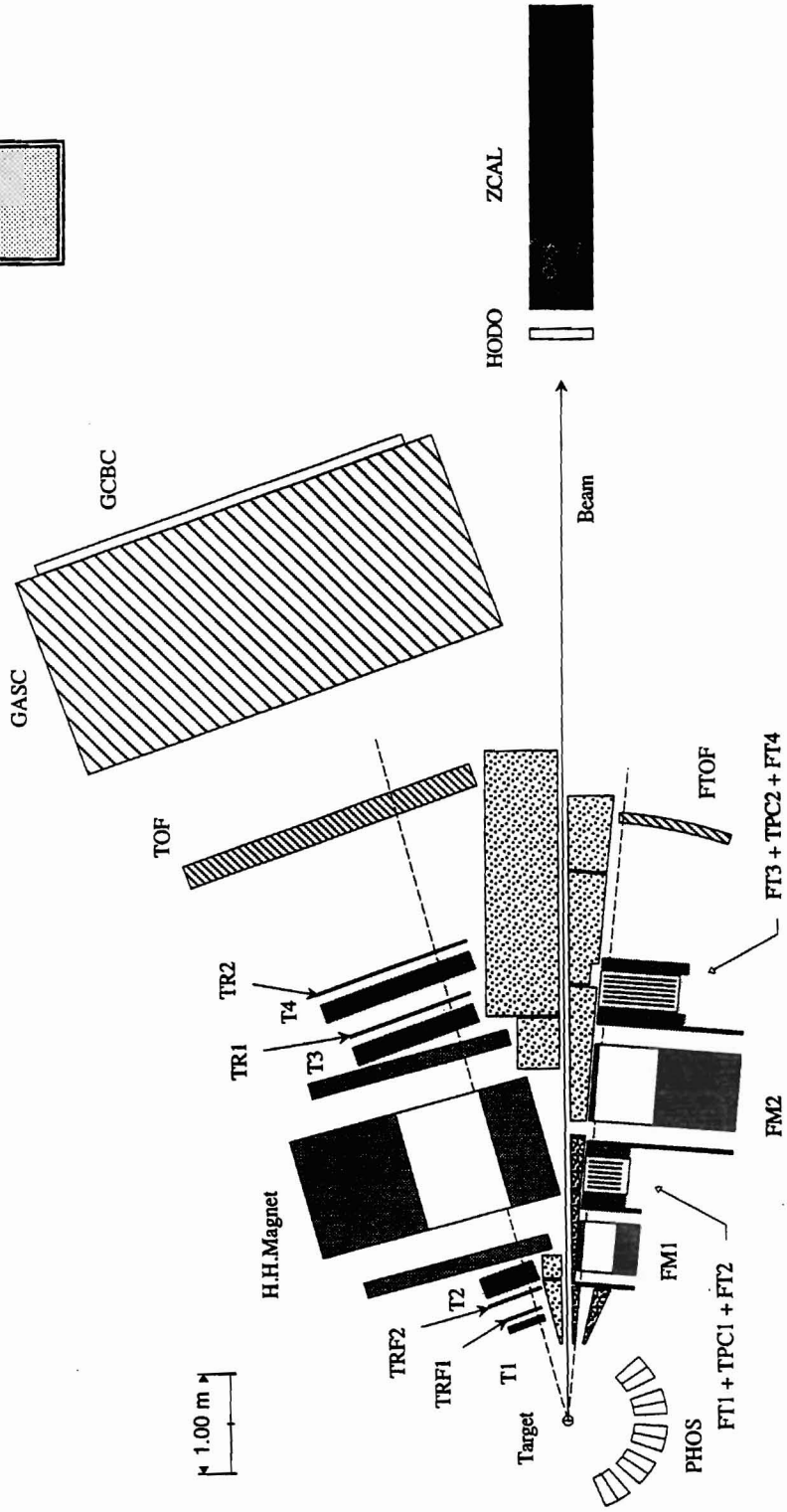

In keeping with the original purpose of E802 and E859, this experiment will continue the investigation of semi-inclusive single particle spectra using the gold beam: (1) to measure the particle momentum spectra as a function of p_t and y' (2) to find how these cross sections vary with "central" or "peripheral" collisions as taken from the event characterizing detectors; (3) to measure two-particle correlations; (4) to look for systemic variations in the cross sections with different beams and targets so as to clarify the reaction dynamics; and (5) to seek evidence in this measurement for the production of very dense nuclear matter, or ultimately, the quark-gluon plasma.

Beam: B
Status: In progress
Hours Charged/Approved: 1529/2600

EXPERIMENT 866 - STUDIES OF PARTICLE PRODUCTION AT HIGH BARYON DENSITY USING THE AU BEAM

Argonne National Laboratory	S. Kaufman
Brookhaven National Laboratory	K. Ashktorab, D. Beavis, C. Chasman, Z. Chen, Y. Y. Chu, J. B. Cumming, R. Debbe, M. Gonin, S. Gushue, J. H. Lee, M. LeVine, B. Moskowitz, J. Olness, L. P. Remsberg, D. Roehrich, M. J. Tannenbaum, J. H. van Dijk, F. Videbaek, H. Wegner, F. Zhu
Columbia University	C. Y. Chi, B. A. Cole, M. Moulson, S. Nagamiya, T. Nayak, O. Vossnack, F. Wang, Y. Wang, Y. Wu, X. Yang, W. A. Zajc
Institute for Nuclear Study University of Tokyo	Y. Akiba, H. Hamagaki, S. Homma, H. Sako
Kyoto University	H. Kaneko
Lawrence Livermore Laboratory	H. C. Britt, J. Luke, M. N. Namboordiri, T. Sangster, R. Soltz, J. H. Thomas, S. Tonse
University of Maryland	E. Garcia, A. Mignerey, J. Shea
Massachusetts Institute of Technology	L. Ahle, H. Baker, V. Cianciolo, G. Heintzelman, E. Judd, D. Morrison, C. Ogilvie, G. Roland, P. Rothschild, J. Ryan, S. G. Steadman, G. S. F. Stephans, T. Sung, D. Woodruff, D. Zachary
New York University	B. Budick
University of California, Space Sciences Laboratory	H. J. Crawford, J. Engelage
University of California at Riverside	J. Chang, W. Eldredge, S.-Y. Fung, H. Liu, R. Seto, H. Xiang, Q. Xu, Q. Zhu
University of Tokyo	R. S. Hayano, K. Shigaki
University of Tsukuba	A. Kumagai, K. Kurita, Y. Miake, S. Sato, K. Yagi
Yonsei University	J. Kang
Co-Spokesmen:	**C. Chasman**
Alternating Co-Spokesmen:	**H. Hamagaki and S. Steadman**

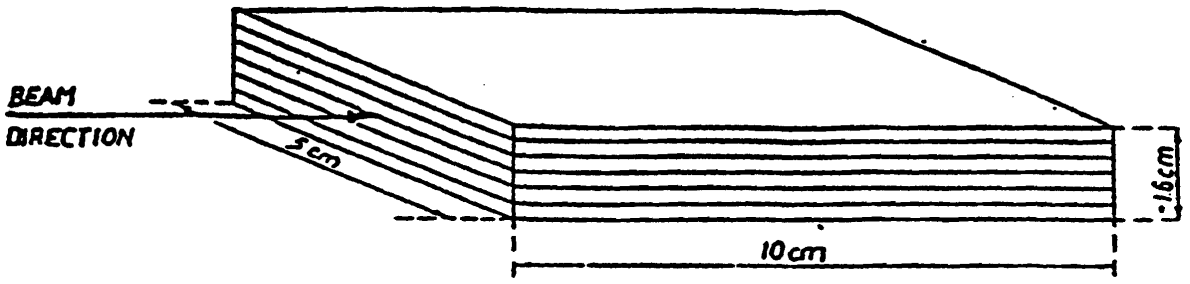

Schematic diagram of emulsion stack exposures.

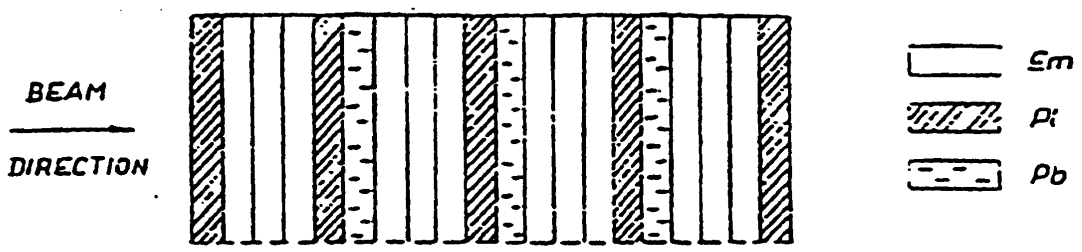

Schematic diagram of the emulsion chamber exposures.

Beam: A3
Status: In Progress
Hours Charged/Approved: 27/22

EXPERIMENT 868 - EXP. 808-INTERACTIONS OF 14.1 GEV/NUCLEON NUCLEI FROM ^{16}O TO ^{197}AU IN LIGHT AND HEAVY TARGETS

University of Minnesota	C.J. Waddington
Louisiana State University	M.L. Cherry, P. Dienes-Jones, W.V. Jones, K. Sengupta, J.P. Wefel
Institute of Nuclear Physics, Krakow	A. Dambrowska, R. Holynski, A. Jurak, A. Olszewski, M. Szarska, A. Trzupek, B. Wilczynska, H. Wilczynski, W. Wolter, B. Wosiek, K. Wozniak
Institute of Theory and Experimental Physics Moscow	A.I. Dubinina, O.K. Egorov, E.D. Kolganova, E.A. Pozharova, T.Yu. Skorotko, V.A. Smirnitski
Spokesman:	**C.J. Waddington**

The Krakow-Louisiana-Minnesota (KLM) collaboration has previously exposed small stacks of nuclear emulsions to the light nuclei beams available from the AGS, Exp. 808. The results of this work, when combined with similar exposures of stacks and chambers made at CERN to higher energy beams, EMU07, have been reported in a number of published papers. In April 1992, when beams of heavier nuclei became available with the commissioning of the Booster, the KLM-Moscow collaboration (KLMM) exposed stacks and chambers of nuclear emulsions to a beam of gold nuclei with a nominal energy of 11.6 GeV/nucleon. Excellent exposures were obtained and the emulsions successfully processed at Dubna. Analysis of the interactions in these emulsions is proceeding on schedule and results based on the detection of more than 1,000 interactions in a minimum bias scan have been reported. Analysis of more central events and of the implications of these results to models of multi-fragmentation is proceeding.

1992 BNL layout Exp 869

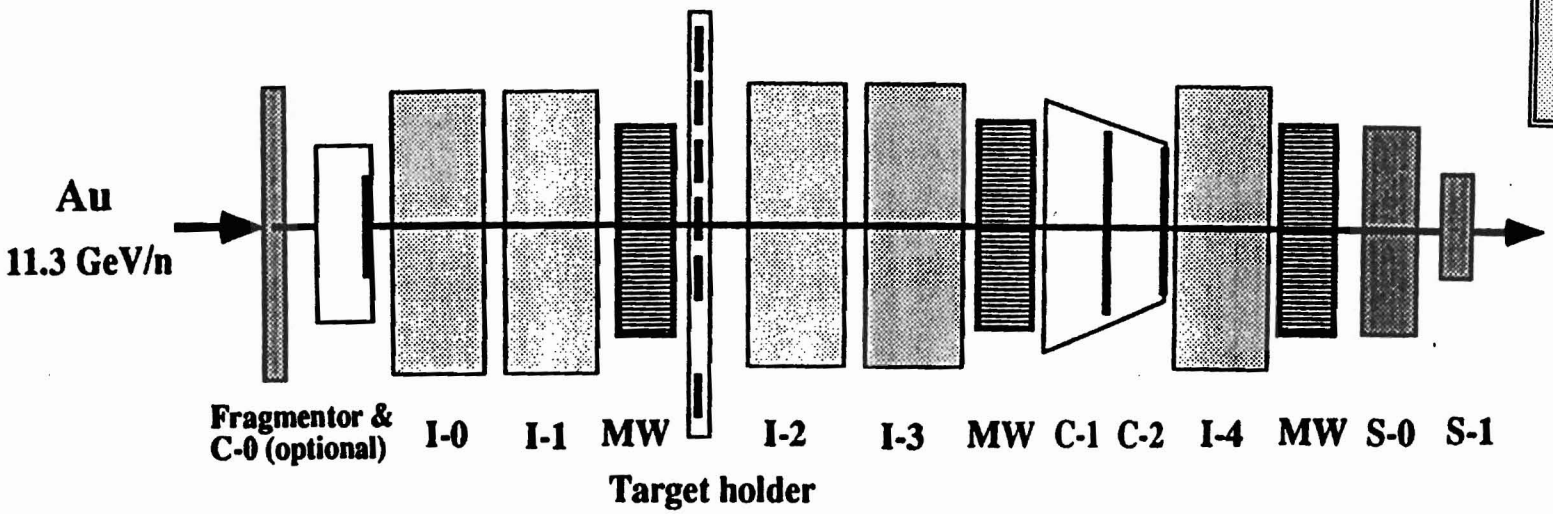

Schematic diagram of the detector setup used for the April 1992 AGS gold run. Ion chambers I – 0 to 4 are four gap parallel plate chambers filled with P10 gas. Cherenkov counters C – 0 to 3 contain radiators of Pilot 425 plastic mounted in white diffusion boxes. The multiwire proportional counters MW have 1 mm wire spacing. The target holder can place any of the targets in the beam by remote command. Thirty-two channels of data are recorded for each event at rates of up to 1,000 events/sec.

Beam: B1
Status: In Progress
Hours Charged/Approved: 41/32

EXPERIMENT 869 - MEASUREMENT OF FRAGMENT YIELDS FOR 14 GEV/NUCLEON AU + X COLLISIONS

University of Minnesota	B.S. Nilsen, C. J. Waddington
Washington University	W. R. Binns, L. Y. Geer, J. Klarmann
Caltech	J. R. Cummings, T. L. Garrard, E. C. Stone
Spokesman:	**C. J. Waddington**

This experiment was proposed in order to continue a determination of the fragmentation of ultra heavy, UH, nuclei begun at the Bevalac as part of a program of cosmic ray studies. It required additional experiments using the new Booster facility at the Brookhaven AGS. The experiments at the AGS would extend the energy range of the measurements upwards to match the energies of the majority of observed cosmic ray nuclei. These measurements would improve our ability to predict the partial cross sections for the production of fragments and allow better calculations of the abundances of the cosmic ray UH nuclei at the sources by taking account of the effects of propagation on the observed abundances. These measurements would also extend current studies of the nuclear physics topics of factorization, limiting fragmentation, charge pickup, Coulomb dissociation and fission.

The detector array used during an exposure to the AGS gold beam in April 1992 is shown. It consists of a combination of ion chambers and Cerenkov counters which identify the particles entering a target and then measure the sum of the charges emitted from interactions in the targets. During the April exposure gold projectiles were allowed to fall on targets of polyethylene, carbon, aluminum, copper, tin and lead. In each case sufficient data was taken to determine partial cross sections of 10 mb with better than 10% accuracy. In addition, a fragmentor was placed in the primary beam, generating secondary beams of fragments. Sufficient of these fragments were generated to allow partial cross sections to be determined in the targets for all projectiles between $Z = 79$ and 70. The excellent resolution of the detector array allows the identification of fragments with charges as low as $Z = 50$ coming from gold projectiles. Preliminary results on the total and partial cross sections of the gold projectiles have been reported.

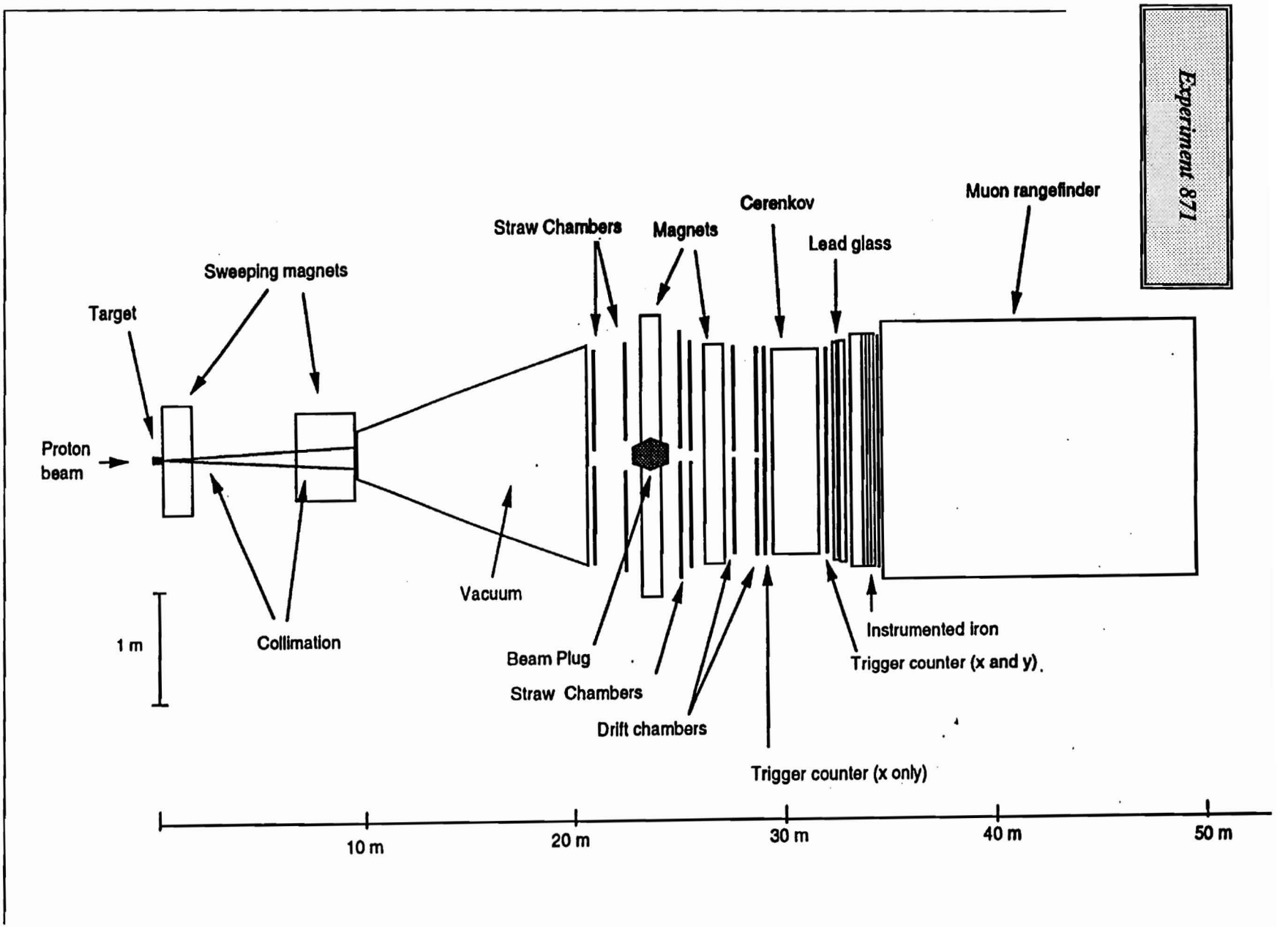
Experiment 871
Muon rangefinder
Cerenkov
Lead glass
Straw Chambers
Magnets
Sweeping magnets
Target
Proton beam
Vacuum
1 m
Collimation
Beam Plug
Straw Chambers
Drift chambers
Instrumented iron
Trigger counter (x and y)
Trigger counter (x only)
10 m
20 m
30 m
40 m
50 m

Beam: B5
Status: In progress/construction
Hours Charged/Approved: 1964/3600

EXPERIMENT 871 - A NEW SEARCH FOR VERY RARE K_L DECAYS

University of California at Irvine	M. Bachman, D. Connor, P. DeCecco, R. Lee, N. Kanematsu, W. R. Molzon
University of Richmond	P. Rubin
Stanford University	K. Ecklund, C. Hartman, M. Hebert, G.M. Irwin, M. Pommot-Maia, S. G. Wojcicki
University of Texas at Austin	D. Ambrose, S. Graessle, S. Hamilton, G. W. Hoffmann, K. Lang, M. R. Marcin, J. McDonough, A. Milder, P. J. Riley, J. L. Ritchie, C. B. Ware, S. Worm
College of William and Mary	M. Eckhause, A. D. Hancock, C. Hoff, J. R. Kane, Y. Kuang, R. D. Martin, R. E. Welsh, E. Wolin
Spokesmen:	**J. R. Kane, W. R. Molzon, J. L. Ritchie, S. G. Wojcicki**

This group plans to carry out a new search for the decays $K_L \rightarrow \mu e$ and $K_L \rightarrow ee$, building on the experience from the recently completed experiment, E791. The $K_L \rightarrow \mu\mu$ branching ratio measurement will also be improved. The final E791 single event sensitivity for $K_L \rightarrow \mu e$ was about $1\text{-}2 \times 10^{-11}$. The new experiment will reach a single event sensitivity below 10^{-12}, and if no events are observed, will set an upper limit of about 2×10^{-12}. About 10,000 $K_L \rightarrow \mu\mu$ decays will also be observed.

The experiment will take the novel approach of stopping the neutral beam in a beam stop near the upstream end of the spectrometer.

Experiment 874

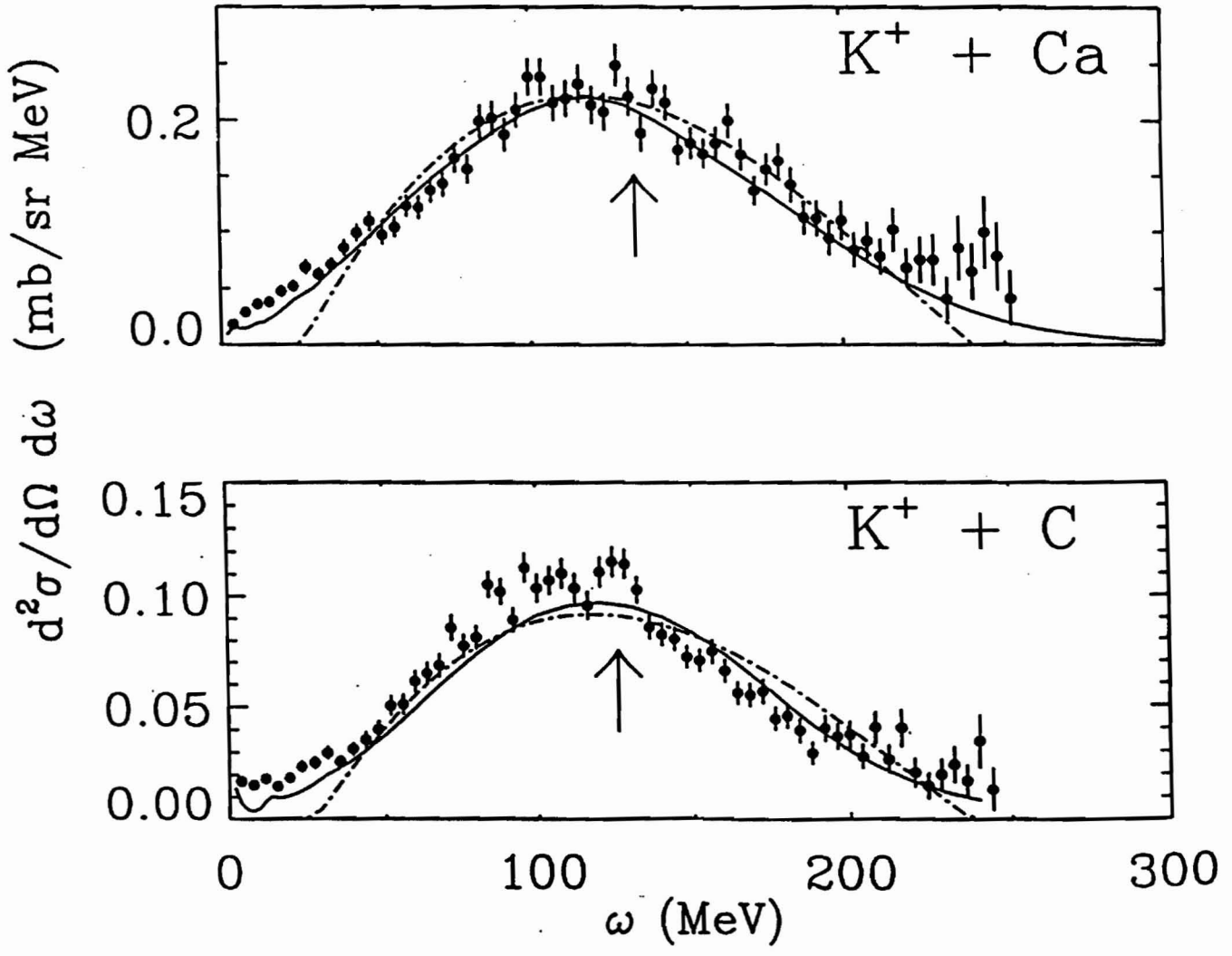

Doubly-differential cross sections for scattering of 720 MeV/c K^+ from Carbon and Calcium at a momentum transfer q = 500 MeV/c. The arrows indicate the position of scattering from free hydrogen, and the broad peaks are from quasielastic scattering. The curves are relativistic Hartree, random phase approximations for nuclear matter at the appropriate density (*dot-dashed*) and for the finite nuclei (*solid*).

Beam: C6
Status: Complete in 1993
Hours Charged/Approved: 804/783

EXPERIMENT 874 - KAON-NUCLEUS QUASIELASTIC AND ELASTIC SCATTERING AT 720 MEV/C

University of Colorado	C. Kormanyos, R. J. Peterson, J. Wise
University of Houston	E. Hungerford, B. W. Mayes, L. Pinsky
Brookhaven National Laboratory	S. Bart, R. E. Chrien, R. Sawafta, R. J. Sutter
Ohio University	K. Hicks, R. Michael
Spokesmen:	**R. E. Chrien, E. Hungerford, R. J. Peterson**

Incoherent quasielastic scattering of positive kaons should show their putatively long free path through a simple proportionality of nuclear cross sections to the number of target nucleons in isosymmetric (T=0) targets. In this case, one can search for evidence of alternations to the free characteristics of nucleons when placed in the interior of a nucleus by precision comparison of quasielastic scattering on several T=0 targets with varying volume to surface ratios. Elastic K^+ scattering on some of these targets at the same beam momentum allows a similar but independent test of altered nucleons by way of optical model methods.

The experimenters have measured the quasielastic scattering of 720 MeV/c K^+ from H, D. C. Ca, and Pb at q = 300, 400, and 500 MeV, finding scattering at nuclear densities of 90%, 69%, and 55% of the central densities for C, Ca, and Pb. A strongly collective response is observed at 300 MeV/c. They have measured elastic scattering of 720 MeV/c and 625 MeV/c K^+ from C over a wide range of angles.

Elastic scattering from ^{6}Li has also been measured. A detailed study of the spectrometer acceptance has been carried out using protons and kaons scattered from polyethylene, as well as using muons from kaon decay. A publication comparing the data against calculations of David Ernst (Vanderbilt) and collaborators, and with Bunny Clark (Ohio State) and collaborators, is being prepared.

Experiment 875

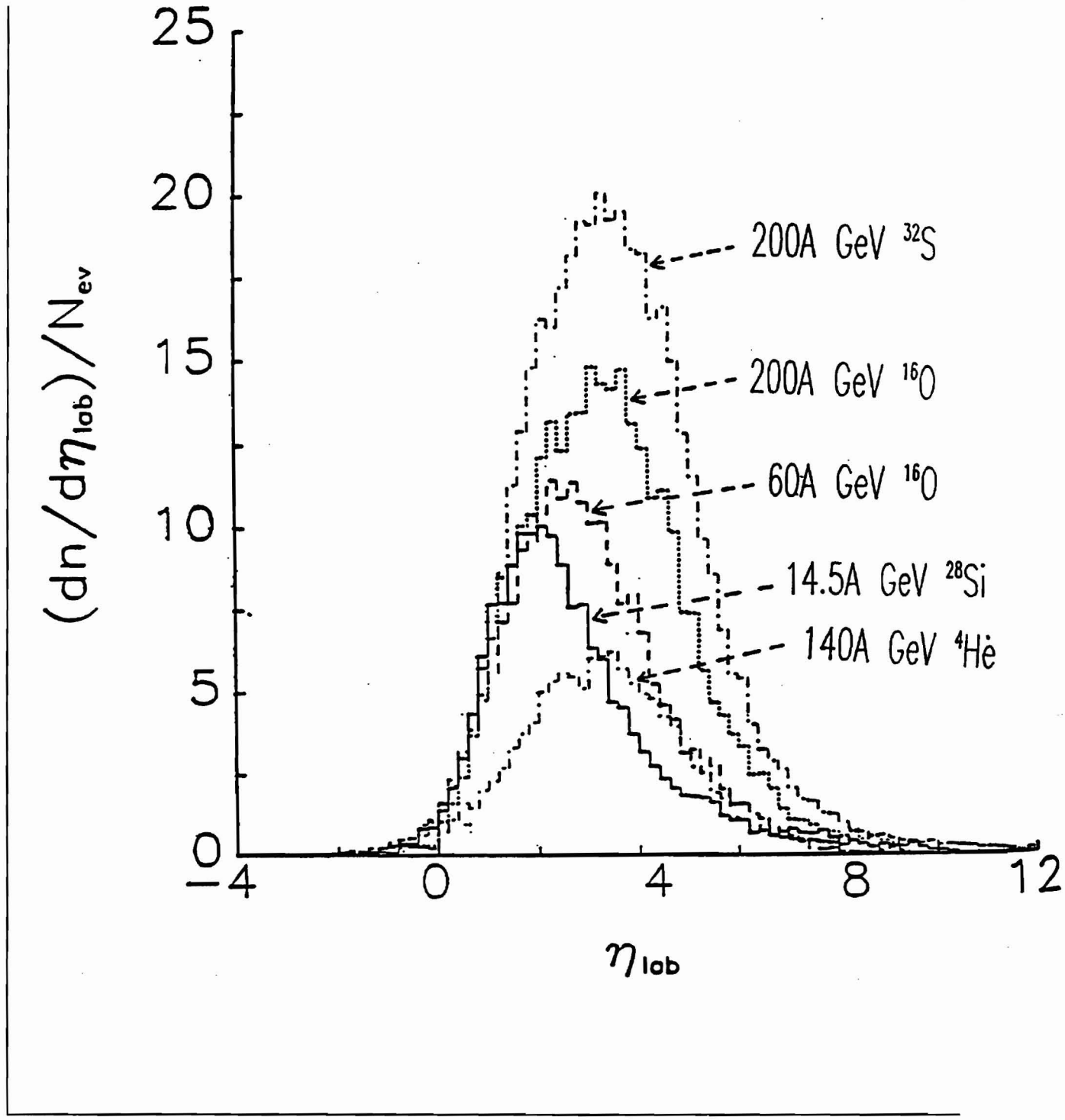

Beam: A3/B1
Status: Completed 1993
Hours Charged/Approved: 28/2

EXPERIMENT 875 - STUDY OF PARTICLE PRODUCTION AND NUCLEAR FRAGMENTATION IN RELATIVISTIC HEAVY-ION COLLISIONS IN NUCLEAR EMULSIONS

State University of New York at Buffalo A. Z. M. Ismail, P. L. Jain, A. Mukhopadhyay, G. Singh

Spokesman: **P. L. Jain**

The experimenters studied the nuclear collisions of ^{197}Au at 10.6A GeV, ^{32}S and ^{16}O at 200A GeV, ^{16}O at 60A GeV and ^{28}Si at 14.5 GeV in nuclear emulsion. An event-by-event analysis was performed on the multiplicity and angular distributions of all the charged particles emerged in nuclear interactions. From the angular measurements of produced shower particles in central collisions, pseudorapidity density and the density fluctuations were investigated. Also the characteristics of Helium particles emitted in semi-central and peripheral interactions were studied. Using the transverse momentum and azimuthal angle techniques, the collective flow of nuclear matter, from the projectile fragments of charge $Z \geq 2$, was investigated. Special emphasis was given to the multifragmentation of ^{197}Au nucleus from AGS in nuclear emulsion. An interesting observation, known as the squeeze-out effect, has been made from the azimuthal angle distributions of charged pions with respect to the reaction plane as determined by the projectile fragments of charge $Z \geq 2$. The experimenters did not find this effect for the ^{32}S beam at 200A GeV from the SPS.

Experiment 876

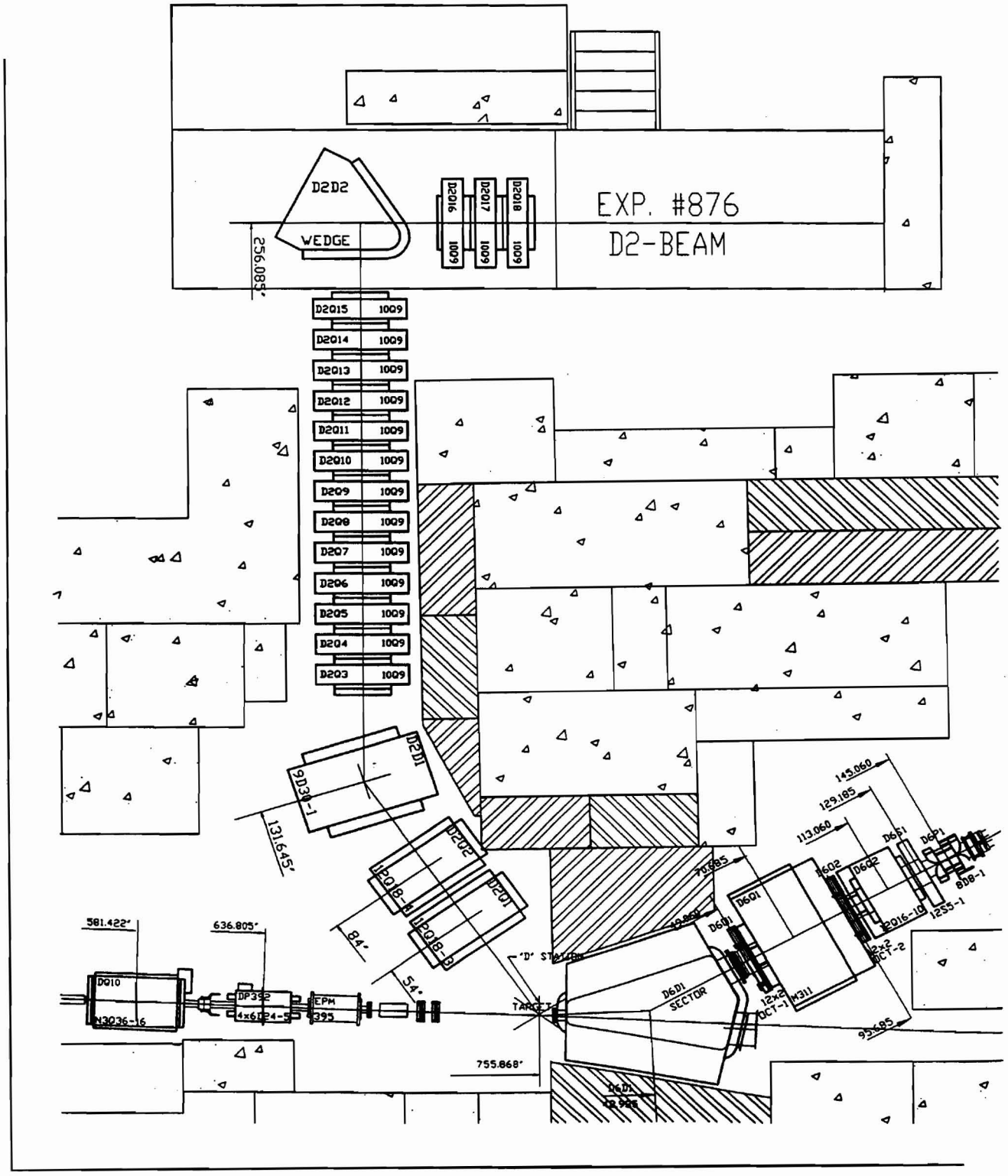

Beam: D2
Status: Approval Withdrawn 9/94
Hours Approved: 300

EXPERIMENT 876 - μ^+ SURFACE BEAM CHARACTERIZATION

College of William and Mary	A. Greer, W. J. Kossler, H. E. Schone
Virginia State University	M. R. Davis, C. E. Stronach
George Mason University	W. F. Lankford
Columbia University	G. Luke, B. Sternlieb, Y. J. Uermuera
Spokesman:	**W. J. Kossler**

This experiment proposes to characterize the μ^+ beam produced from π decay on the surface of the D-line production target. Comparisons to similar beams at TRIUMF indicate that a flux in excess of $10^5/cm^2$ per pulse for 10^{13} protons per pulse might be expected. Such an intensity would make μSR at Brookhaven National Laboratory competitive with TRIUMF and PSI for the majority of this type of research.

E877

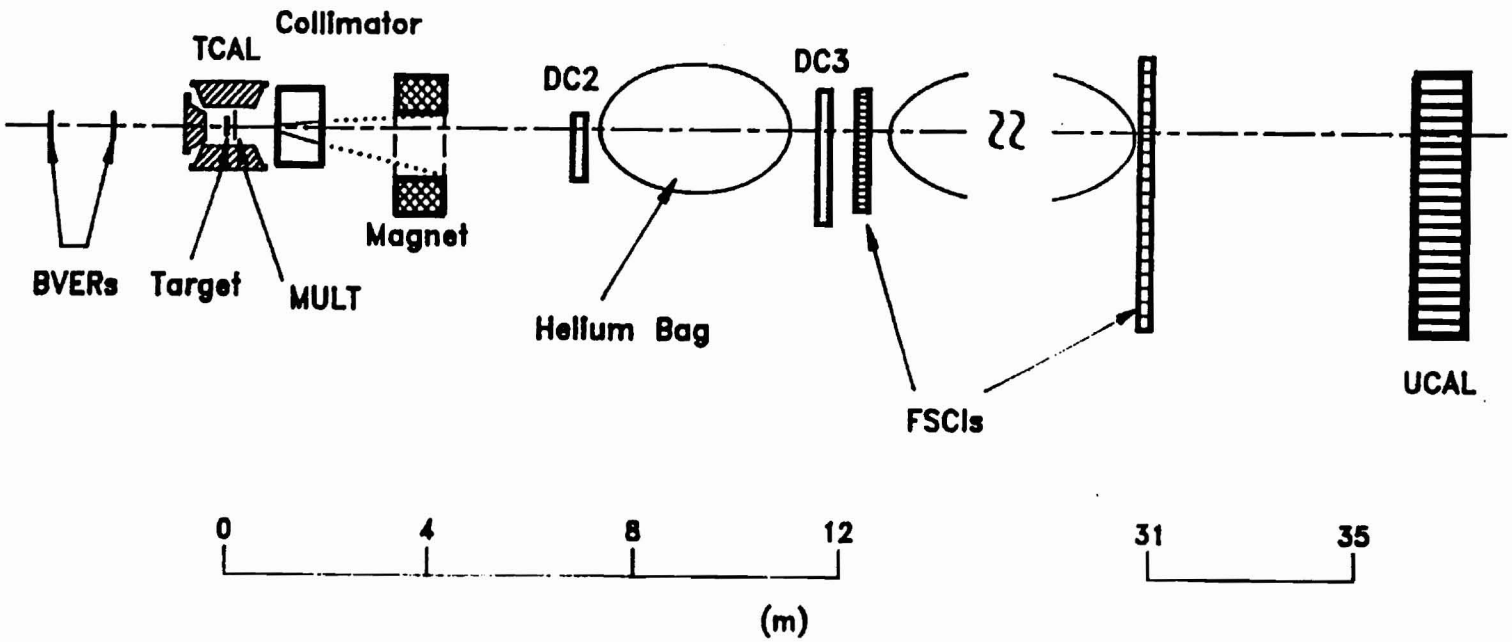
Collimator
TCAL
DC2
DC3
Magnet
BVERs
Target
MULT
Helium Bag
FSCIs
UCAL
0
4
8
12
31
35
(m)

Beam: C5
Status: In progress
Hours Charged/Approved: 1795/1100

EXPERIMENT 877 - STUDY OF RELATIVISTIC NUCLEAR COLLISIONS WITH HEAVY BEAMS USING THE E814 4π CALORIMETRY AND MODIFIED FORWARD SPECTROMETER

Brookhaven National Laboratory	G. David, T. Ludlam, S. McCorkle, E. O'Brien, C. Woody
GSI, Darmstadt	N. Herrmann
Idaho National Engineering Laboratory	R. Arjeinejad, J. Cole, M. Drigert
McGill University	J. Barrette, Y. Dai, R. Lacasse, S. K. Mark, L. Normand, M. Rosati, N. Starinsky
University of Pittsburgh	W. Cleland, M. Clemen, U. Sonnadara, S. Voloshin
University of São Paulo	N. DaSilva, O. Dietzsch, M. Takagui
SUNY at Stony Brook	R. Bersch, P. Braun-Munzinger, T. K. Hemmick, B. Hong, S. Johnson, Y. Kwon, D. Miskowiec, S. Panitkin, P. Paul, T. Piazza, J. Stachel, M. Trzaska, T. Vongpaseuth, J. Wessels, Y. Zhang, C. Zou
Wayne State University	R. Bellwied, T. Budny, T. Cormier, A. French, F. Gang, J. Hall, B. Kim, K. Lahab, Q. Li, C. Pruneau, J. Sheen, H. Xiong
Spokesman:	**P. Braun-Munzinger**

Using an upgraded E814 set-up, this experiment proposes to study central collisions between heavy nuclei and projectiles from the Booster/AGS accelerators. The main emphasis is on a detailed study of the energy flow into 4π and measurements of the spectra of nucleons and produced particles for rapidities $y > 1.5$ and low transverse momenta, with event character-ization over the full solid angle. In addition, nucleons, nuclear fragments and produced particles in the target fragmentation region will be measured.

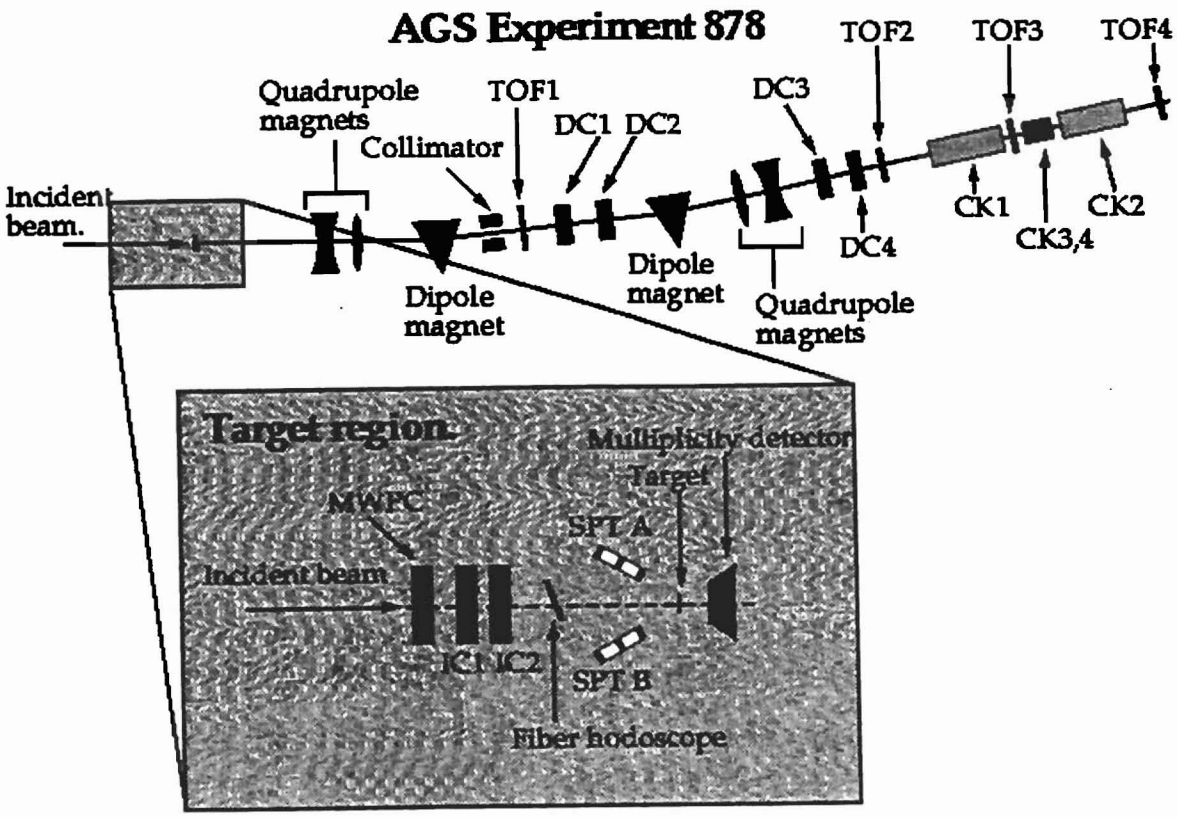
AGS Experiment 878
TOF2
TOF3
TOF4
Quadrupole magnets
TOF1
DC3
DC1 DC2
Collimator
Incident beam.
CK1
CK2
CK3,4
DC4
Dipole magnet
Dipole magnet
Quadrupole magnets
Target region
Multiplicity detector
Target
MWPC
SPT A
Incident beam
IC1 IC2
SPT B
Fiber hodoscope

Beam: A3
Status: Completed 1993
Hours Charged/Approved: 986/807

EXPERIMENT 878 - INVESTIGATION OF ANTINUCLEUS PRODUCTION AND SEARCH FOR NEW PARTICLES IN NUCLEUS-NUCLEUS COLLISIONS AT THE AGS

University of California Space Science Laboratory	H. J. Crawford, Y. Dardenne, J. Engelage, L. Greiner
Brookhaven National Laboratory	D. Beavis, R. Debbe
University of California-Los Angeles	J. Carroll, T. J. Hallman, G. Igo
KEK	J. Chiba, K. H. Tanaka
University of Waseda	T. Doke, T. Kashiwagi, J. H. Kikuchi
Johns Hopkins University	R. Welsh
University of Tokyo	R. S. Hayano
Lawrence Berkeley Laboratory	I. Flores, H. Heckman, P. J. Lindstrom, R. Wright
Columbia University	S. Nagamiya, P. Stankus
University Space Research Association	J. Mitchell
Yale University	M. Bennett, J. Nagel, K. Pope, B. Shiva Kumar
Spokesman:	**H. J. Crawford**

The purpose of the experiment is to investigate antideuteron ($\bar{d}$) production and to search for new states of matter produced in Au-Au collisions at the AGS using the A3 line as a spec-trometer. This is a follow-on to the E858 program, an investigation of $\bar{d}$ production in Si+Al, Si+Cu, and Si+Au interactions, which achieved high statistics measurements of the π^- K^-, $\bar{p}$ spectra at 0° and set new limits on the production of stable negative particles. It was shown that the $\bar{p}$ yield per interaction was smaller than expected and the $\bar{d}$ yield was well below the level calculated from a simple coalescence model. The goal of E878 is to further investigate the hadronization process with a systematic study of pA, SiA, and AuA collisions, to determine $\bar{d}$ production from these systems, and to provide high statistics measurements of the π, K, p spectra at 0° over a broad range of secondary momenta, 1.5 - 20 GV.

POLARIZED PROTON COLLISIONS AT BROOKHAVEN

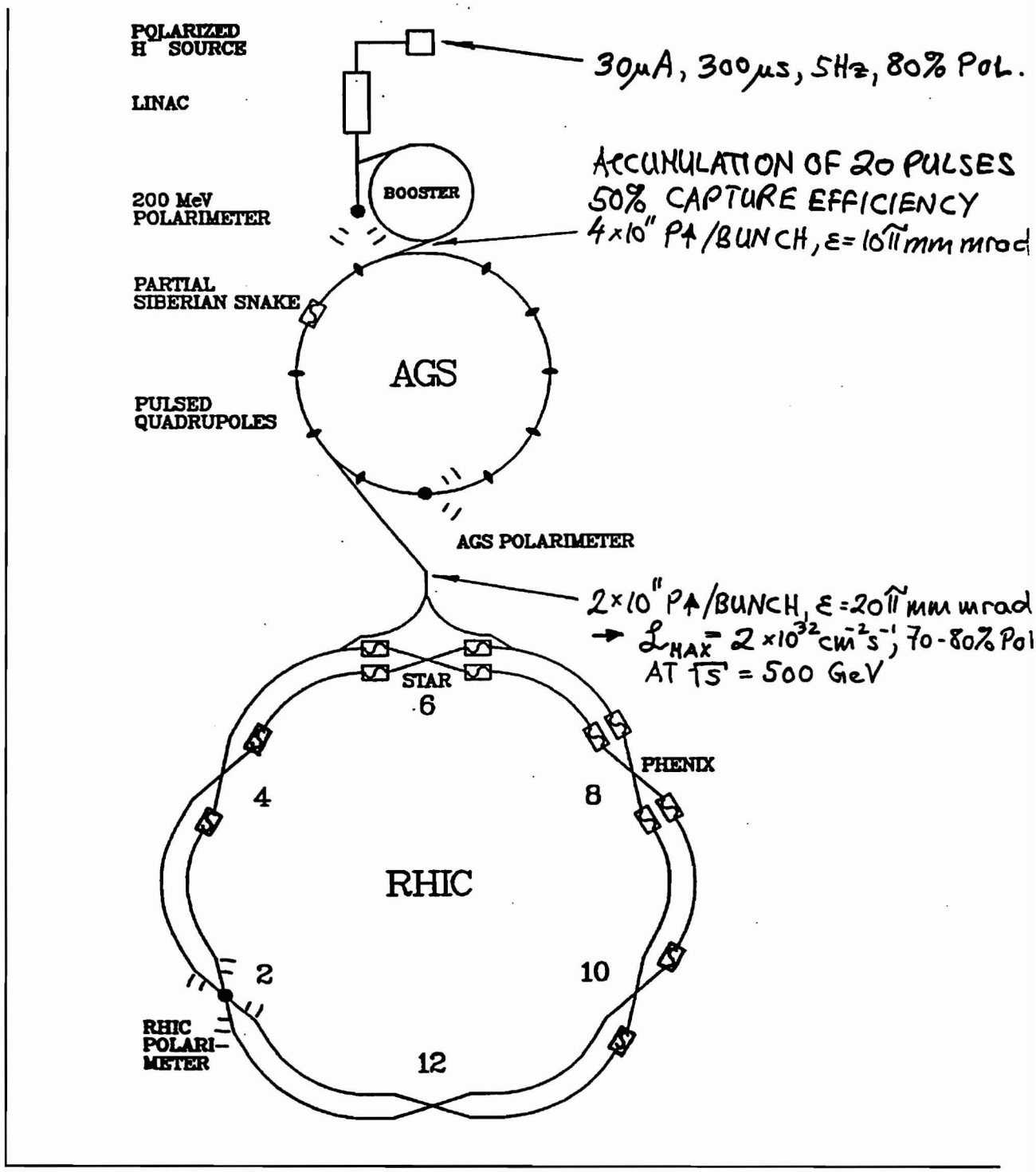

Beam: AGS Internal Beam
Status: Running
Hours Charged/Approved: 144/320

EXPERIMENT 880 - THE EFFECTS OF A PARTIAL SIBERIAN SNAKE ON POLARIZATION AT THE AGS

Indiana University IUCF	D. Caussyn, H. Huang, S.Y. Lee, D. Li
Brookhaven National Laboratory	L. Ahrens, J. Alessi, G. Bunce, E. D. Courant, Y. Y. Lee, A. Luccio, Y. I. Makdisi, L. Ratner, K. Reece, T. Roser, J. F. Skelly, A. Soukas, S. Tepikian, R. E. Thern, W. van Asselt
Argonne National Laboratory	M. Beddo, D. Grosnick, D. Lopiano, H. Spinka, L. Teng, D. G. Underwood, A. Yokosawa
TRIUMF	U. Wienands[1]
Fermilab	V. Bharadwaj, S. Hseuh
KEK	S. Hiramatsu, Y. Mori, H. Sato, K. Yokoya
Institute for High Energy Physics, Serpukhov	A. Ufimtsev
Spokesmen:	**S. Y. Lee and T. Roser**

This group will build a 4.7 Tesla-meter room temperature solenoid which will be installed in a 10-foot long AGS straight section. AGS polarized proton beam time will be used to perform *partial snake experiments*. These experiments will test the idea of using a partial snake to correct all depolarizing imperfection resonances and also test the feasibility of betatron tune jump in correcting intrinsic resonances in the presence of a partial snake.

(1) Present address: SLAC

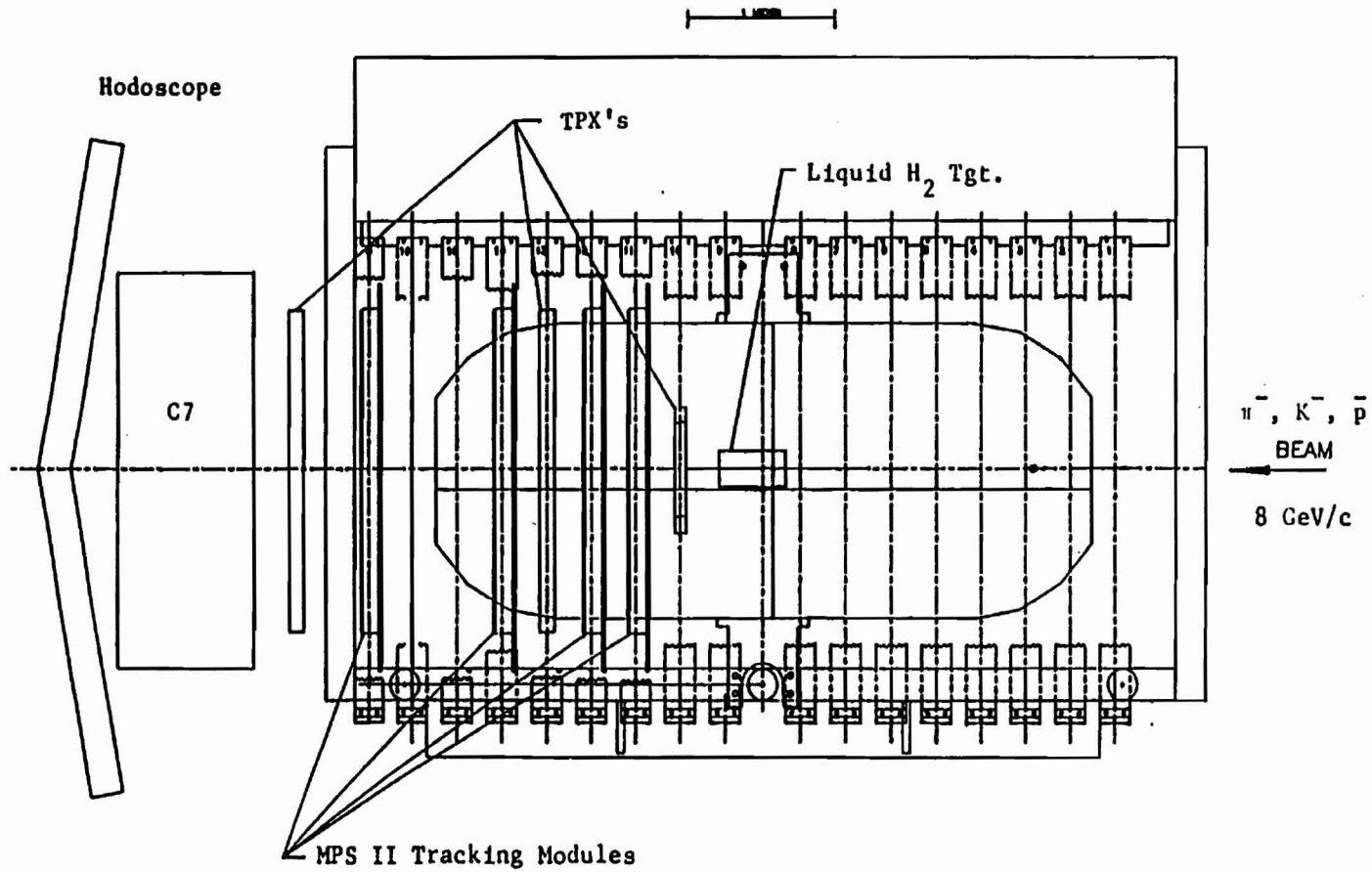

Experiment 881

Electrostatic Separators and Cherenkov Counter Identification

A Schematic of the MPS II Experimental Arrangement for $\psi\phi$ Experiments.

Beam: B2/A1
Status: In progress
Hours Charged/Approved: 821/1821

EXPERIMENT 881 - UTILIZING $\phi\phi$ SPECTROSCOPY TO SEARCH FOR EXOTIC GLUEBALLS, EXOTIC HYBRID OR EXOTIC MULTIQUARK STATES

Brookhaven National Laboratory and City College of New York	S. J. Lindenbaum
Brookhaven National Laboratory	R. W. Hackenburg, R. S. Longacre
City College of New York	C. S. Chan, M. A. Kramer, Z. Zhao, Y. Zhu
Rensselaer Polytechnic Institute	G. Adams, K. Vaziri
Spokesman:	S. J. Lindenbaum

The powerful $\phi\phi$ spectroscopy which resulted in the discovery of $I^G J^{PC} = 0^+2^{++}$ g_T (2010), $g_{T'}$ (2300) and $g_{T''}$(2340) (which are prime glueball candidates) will be used to search for exotic glueballs, exotic hybrids and exotic multiquark states.

A first run occurred in the summer of 1992. Analysis of the early data obtained is in progress.

Experiment 882

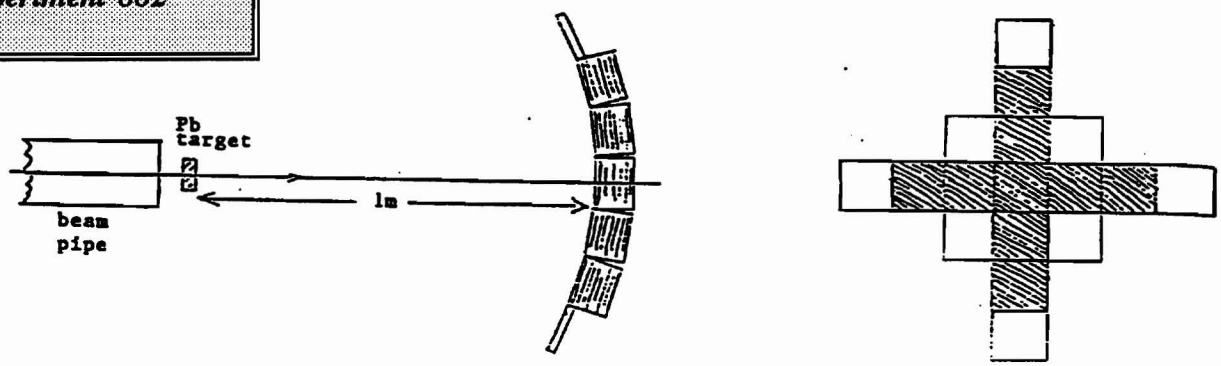

Layout of first experiment, showing end of beam pipe, Pb target, and slowing stacks of CR-39 plastic detectors alternating with Pb, at a distance of 1 m downstream from the target. Shaded stacks consist of 12 repeat units of CR-39/Pb; unshaded stacks consists of 3 repeat units.

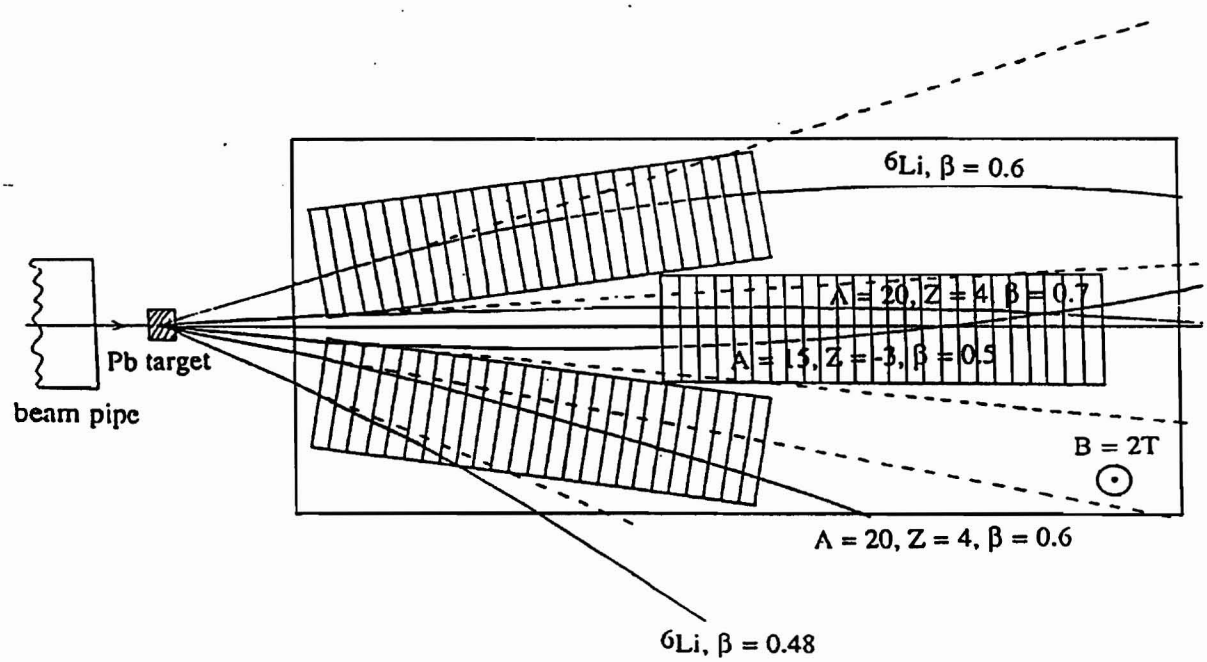

Layout of second experiment, showing end of beam pipe, Pb target, high-field region of bending magnet, and three tracking chambers consisting of 25 thin CR-39 sheets at 2 cm intervals.

Beam: A3/C5
Status: In Progress
Hours Charged/Approved: 43/50

EXPERIMENT 882 - SEARCH FOR PARTICLES WITH $|Z| \geq 3$ AND NEGATIVE CHARGE OR LARGE A/Z PRODUCED IN CENTRAL NUCLEUS-NUCLEUS COLLISIONS

University of California at Berkeley Y. He, D.M. Lowder, P.B. Price

Spokesman: **P.B. Price**

Two experiments are proposed which will use CR-39 track detectors to study production of multiply charged composites in central collisions, and in particular search for both positively and negatively charged mid-rapidity particles with $|Z| \geq 3$, especially those with anomalously large A/Z.

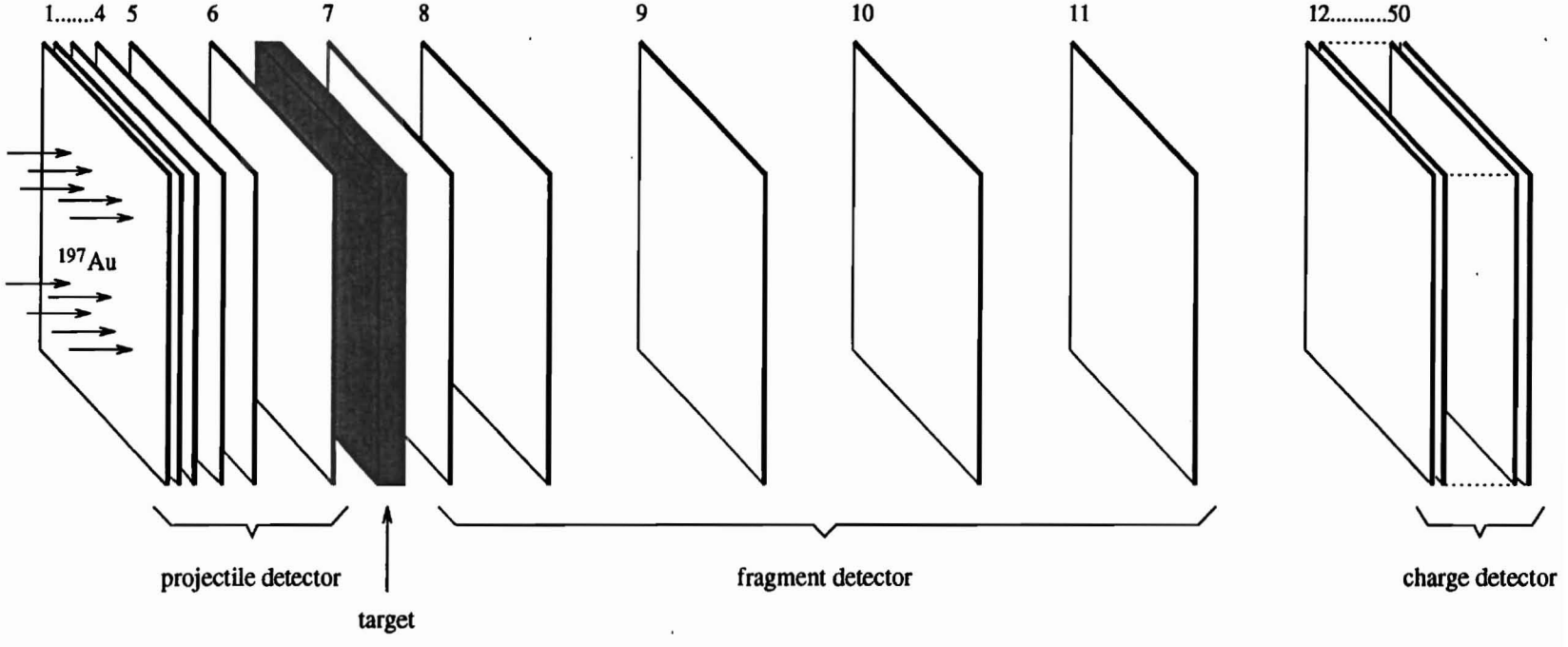

Experimental setup consisting of a few CR-39 detector foils upstream and downstream of a thick target. A stack of foils at the end provides better charge resolution by multiple sampling.

Beam: A3/B1
Status: Complete in 1993
Hours Charged/Approved: 29/10

EXPERIMENT 883 - FRAGMENTATION OF AU-PROJECTILES AT AGS ENERGIES

University of Siegen J. Dreute, W. Heinrich, G. Rusch, B. Wiegel, E. Winkel

Spokesman: **W. Heinrich**

Stacks of plastic nuclear track detectors and different target materials will be exposed to beams of Au projectiles. The detectors will record tracks of relativistic nuclei with charge numbers $Z \geq 6$. After development of the tracks by etching, they will be detected and measured using completely automated microscope systems. Experiments with high statistics are therefore possible. Multi-fragmentation events in which several intermediate mass fragments are emitted from the heavy projectile will be studied in detail. Charge, emission angles and transverse momenta of the fragments will be determined. Similar experiments using Kr, Ag, Au and U beams at the BEVALAC have been performed. By a comparison of the fragmentation systematics of Au at AGS and BEVALAC energies, it is hoped to obtain significant indications whether the process of multi-fragmentation is related to a phase transition of nuclear matter or whether it is a statistical breakup only that does not depend on beam energy.

The good charge resolution of our detectors, especially for fragments with small charges, will allow the experimenters to search for projectile fragments with fractional charge.

TARGET FOR FRACTIONAL CHARGE ENHANCEMENT WITH 24 GeV PROTON BEAM

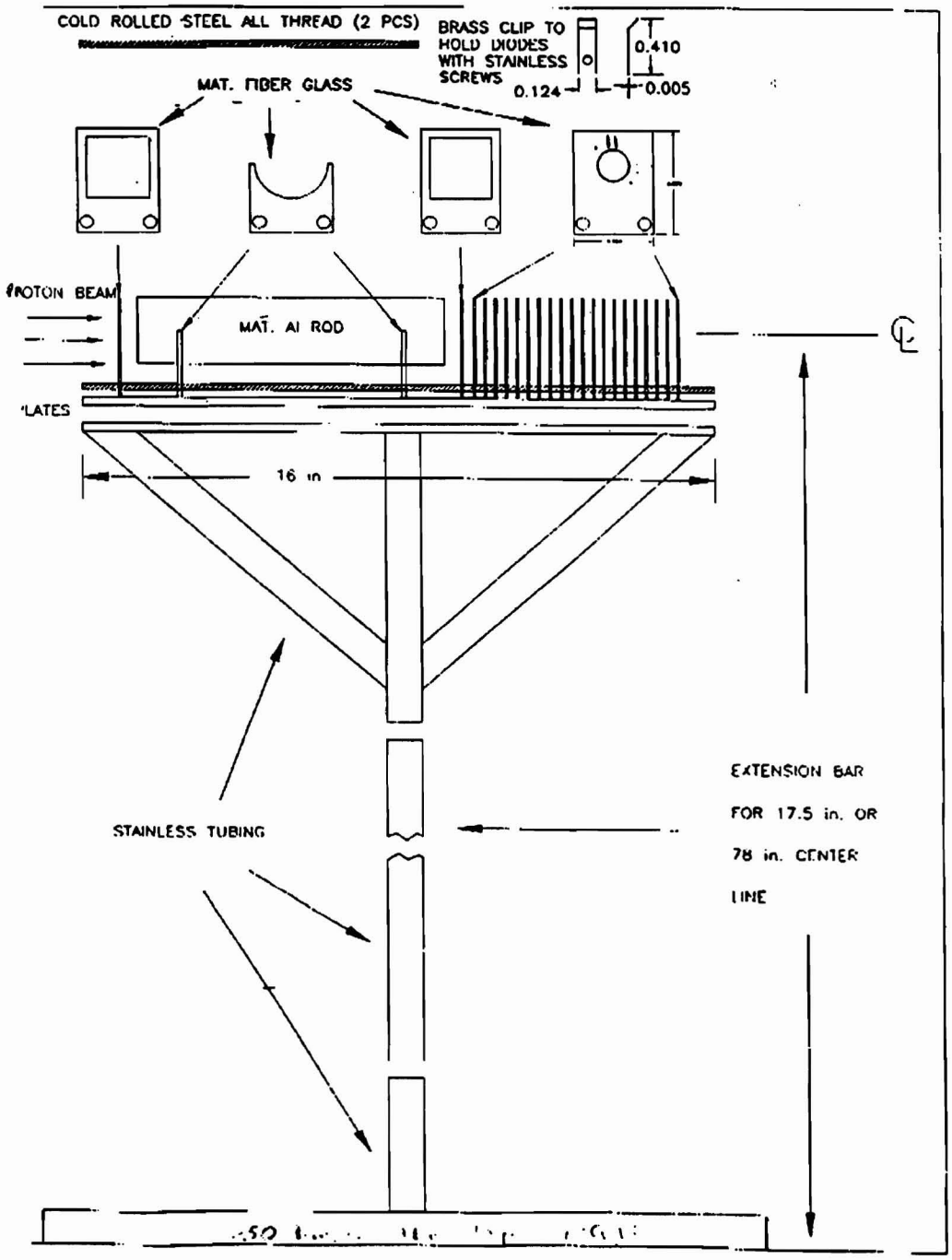

Beam: A
Status: Completed 1992
Hours Charged/Approved: 13/7

EXPERIMENT 884 - AN EXPERIMENT TO ENHANCE FRACTIONAL CHARGE IMPURITIES (FCI) IN SEMICONDUCTORS TO BE USED IN AN OPTOELECTRONIC SEARCH FOR FCIS

University of Pittsburgh S. Betarbet, W. E. Cleland, S. Matsik, A. G. U. Perera

Spokesman: **A. G. U. Perera**

This experiment proposes to extend the search for fractional charge impurities (FCIs) in silicon to include a search for FCIs produced by a 28 GeV/c proton beam. A previous search was conducted for naturally occurring FCIs in silicon, yielding an upper limit of 4 FCIs per 10^{20} atoms, lower than any other existing upper limit for naturally occurring fractionally charged particles. A setup consisting of an Al target and a stack of 20 diodes are exposed to the primary proton beam. Using existing upper limits for free quark production by high energy beams, the number of quarks that are expected to be stopped in the sensitive region of the detector are estimated. The experimenters should be able to set a comparable upper limit (within a factor of 3) to the current value.

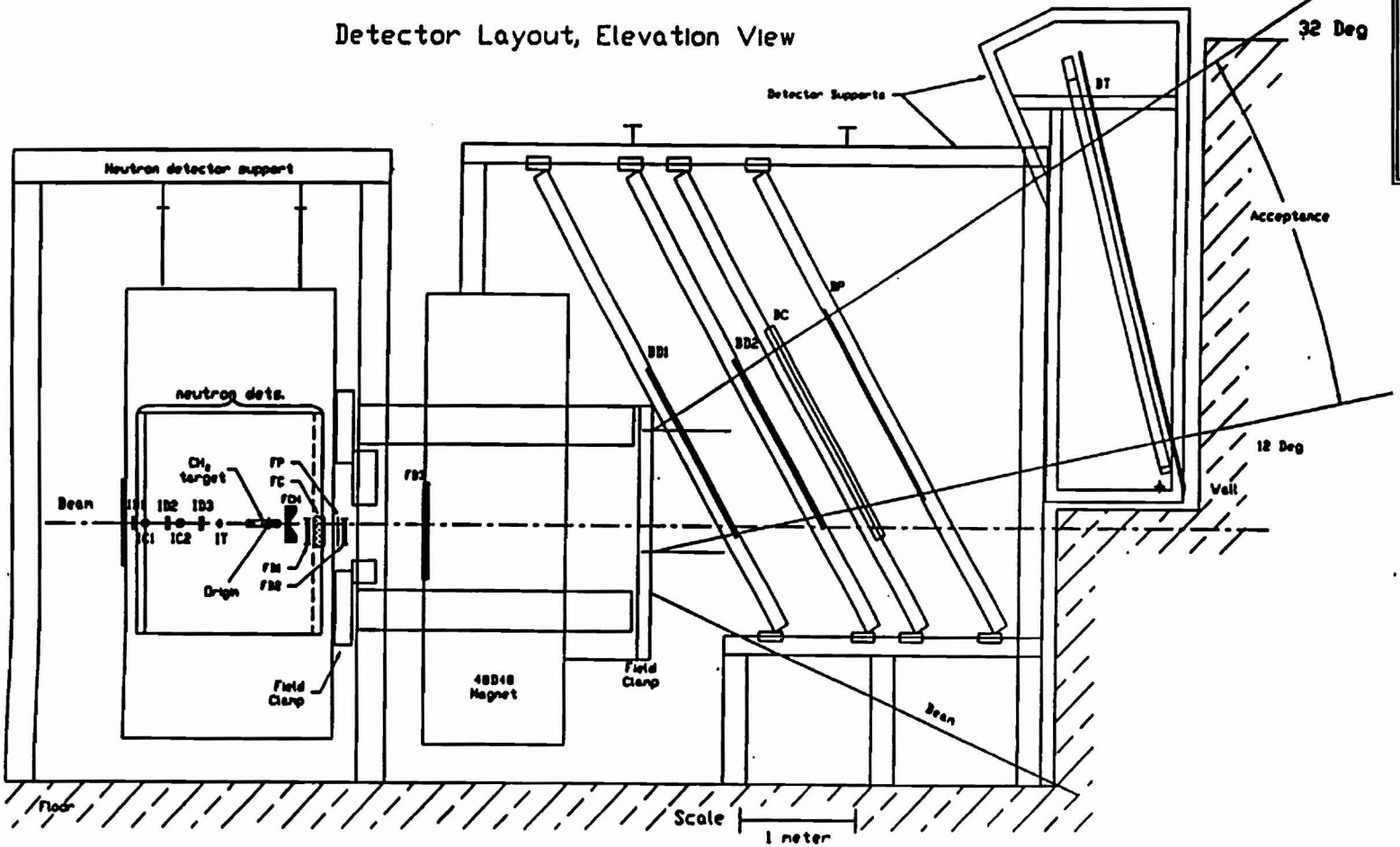

Detector configuration for ΛΛ experiment. Drift chambers ID1, ID2, and ID3 determine incoming K^- trajectory and are combined with upstream hodoscope data to determine K^- momentum. Drift Chambers FD1, FD2, FD3, BD1 and BD2 determine K^+ momentum. Scintillators IT and BT determine K^+ time-of-flight. Hodoscopes FP and BP determine spectrometer acceptance. Aerogel Cerenkovs IC1, IC2, FC, and BC reject pions. Hydrogen Cerenkov FCH rejects protons.

Beam: D6
Status: Approved
Hours Charged/Approved: 67/1000

EXPERIMENT 885 - EXPERIMENT TO DETECT ΛΛ HYPERNUCLEI

Brookhaven National Laboratory	S. Bart, R. E. Chrien, M. May, P. H. Pile, R. Sawafta, R. Sutter
Carnegie-Mellon University	G. Franklin, R. Magahiz, F. Merrill, B. Quinn, R. Schumacher, V. Zeps
Kyoto University	T. Iijima
University of Kyoto Sangyo	F. Takeutchi
University of Manitoba	C. Davis, S. Page, D. Ramsay, W. van Oers
University of New Mexico	B. Bassalleck, J. Lowe, A. Rusek, D. Wolfe
TRIUMF	D. Gill
Vassar College	R. Stearns
Spokesmen:	**M. May and G. Franklin**

The 2 GeV kaon beam and the spectrometer of Exp. 813 will be used to observe and study the properties of ΛΛ hypernuclei.

The question of what form matter takes when some strange quarks are present has been the subject of speculation. In the conventional picture, hypernuclei, where the strange quarks appearing lambda particles are the ground state of strange matter. There are suggestions that multi-quark states, rather than lambda particles, are the lowest energy state for matter containing roughly equal numbers of up downs and strange quarks. The H particle is proposed as a six quark state (uuddss) below the mass of two lambda particles. If this is the case, two lambdas in a hypernucleus will fuse to form an H particle, as no selection rule forbids it.

Hypernuclei containing one lambda have been intensively studied; there are only 3 candidates (one recent) for ΛΛ hypernuclei. New data on double hypernuclei will be a cornerstone for understanding proposals for more exotic forms of strange matter.

BNL–AGS D6 Beam Line & E886 Experimental Setup

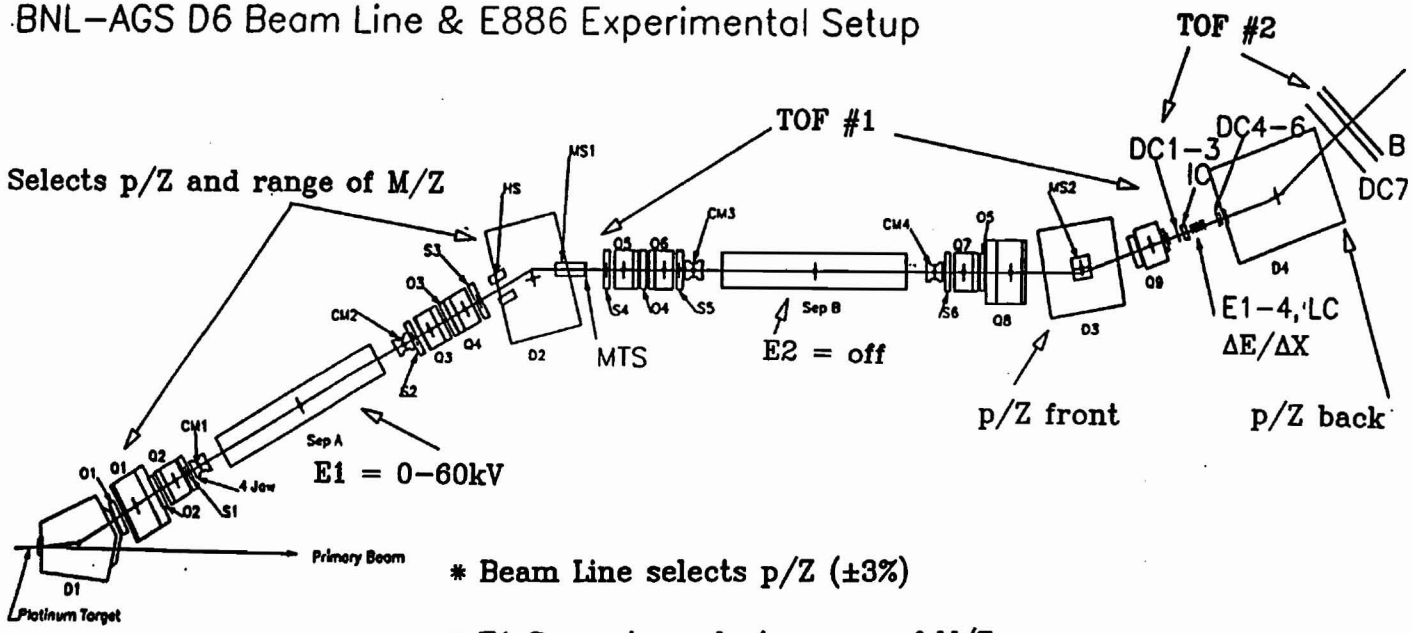

* Beam Line selects p/Z (±3%)
* E1 Separator selects range of M/Z
* TOF selects M/Z (front and back)
* ΔE/ΔX in E1–E4 selects Z
* Full particle tracking through front and back spectrometers --> p/Z determined twice

Beam: D6
Status: Completed 1993
Hours Charged/Approved: 937/663

EXPERIMENT 886-SEARCH FOR NEW PARTICLES IN NUCLEUS-NUCLEUS COLLISIONS

Kyoto University	H. Enyo, T. Iijima, K. Imai, A. Masaike, S. Mihara, N. Saito, K. Yamamoto, S. Yamashita, S. Yokkaichi
Kyoto Sangyo University	K. Okada, F. Takeutchi
University of Birmingham	N. Nelson, R. Zybert
Brookhaven National Laboratory	D. Beavis, R. Chrien, P. Pile, R. Sawafta, R. Sutter
Carnegie Mellon University	G. Franklin, R. Magahiz, F. Merrill, B. Quinn, R. Schumacher, R. Sukaton, V. Zeps
Yale University	G. Diebold
University of New Mexico	B. Bassalleck, J. Hall, J. Lowe,* A. Rusek, D. M. Wolfe
Freiburg University	M. Burger, T. Bürger, J. Franz, E. Rössle, H. Schmitt
Vassar College	R.L. Stearns
Spokesmen:	**K. Imai, P. Pile, and G. Diebold**

The purpose of this experiment is to search for new particles, such as strange quark matter (strangelets), in nucleus-nucleus collisions. It has been suggested that strangelets might exist and may be produced in relativistic nucleus-nucleus collisions. Using the 2 GeV/c K-beam line as a mass spectrometer, the experimenters propose to search for long-lived ($\tau > 10^{-8}$s) particles with large mass to charge ratios (M/Z>3 GeV/c^2) as is expected for strangelets.

E886 was approved in late February 1992 for a nominal 100 hour test run during the 1992 heavy ion running period. This marked the first time heavy ions were delivered to the D line. During this test run E886 ran smoothly and efficiently, completing its test runs using available beam not required by other users. A total of 283 beam hours were charged; however, the beam intensity during most of this running was low. Of the 283 hours charged, approximately 20 hours of Au beam and 50 hours of Si beams were at the highest available intensities ($\approx 10^7$ Au and 10^9 Si ions per spill). As a result of the excellent particle identification and high rate capabilities of the D6 beam line and spectrometer system, the production cross sections of a broad range of known particles were quickly measured. This included $\pi^{\pm}$,$K^{\pm}$,$p^{\pm}$,d, t, ^{3}He, and ^{4}He. In the high sensitivity runs associated with the Si strangelet searches, rare nuclear species such as ^{6}He and ^{8}He were also measured. For Au running, sensitivity was limited due to the relatively low (10^7/spill) beam intensity. The strangelet search was made in FY 93 with, hopefully, a more intense gold beam. The strangelet sensitivity is expected to be sufficient to seriously constrain strangelet production models based on intermediate quark-gluon plasma formation.

* Also at the University of Birmingham.

Experiment 887

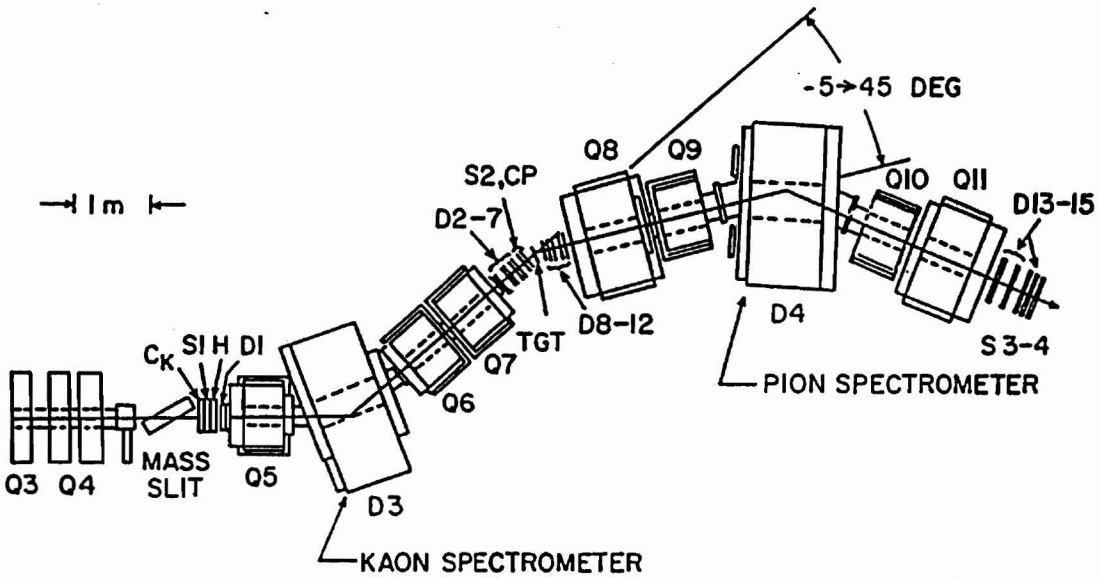

Beam: C6
Status: Completd 1993
Hours Charged/Approved: 848/800

EXPERIMENT 887 - DO NARROW Σ HYPERNUCLEAR STATES EXIST?

Brookhaven National Laboratory	S. Bart, R. E. Chrien, R. Sawafta
CEBAF and Hampton University	K. Baker, W. Naing, L. Tang
Yale University	M. Barakat
University of Indiana	W. Franklin, S. W. Wissink
INS-Tokyo	T. Fukuda, T. Nagae, H. Outa
University of Houston	K. Gross, E. B. Hungerford, B. Mayes, I. Zhu
Ohio University	K. Hicks, R. Michael
University of Tokyo	R. S. Hayano, Y. Shimizu
Spokesmen:	**R. Sawafta and K. Hicks**

Recently, hypernuclear mass spectra for in-flight $(K^-,\pi^\pm)$ reactions from ^1H, ^2H, ^6Li, and ^9Be have been measured at p_K = 600 MeV/c. The new $(K^-,\pi^\pm)$ spectra have greatly changed the experimental situation with regard to the narrow structures above the Σ binding threshold. The experimenters have obtained spectra with almost 10 times better statistics than previous meaurements, and preliminary analysis of the data show no evidence of any of the putative structure. A detailed comparison of the new and old data sets makes clear that the earlier claims have an inadequate statistical foundation, and hence all previously claimed examples of such narrow structure in the unbound energy region can be excluded.

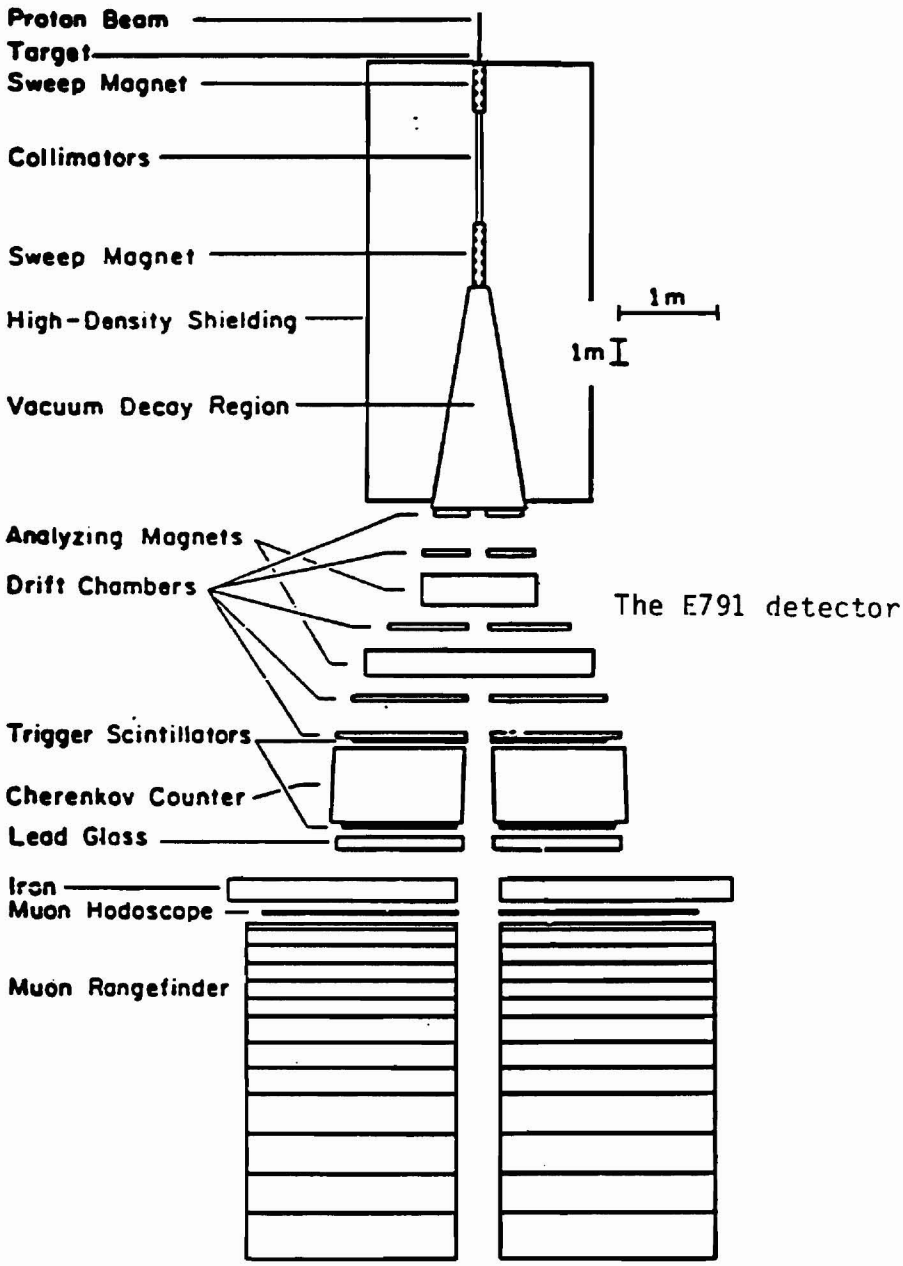

The E791 detector

Beam: B5
Status: Completed 1992
Hours Charged/Approved: 401/400

EXPERIMENT 888 - SEARCH FOR THE H DIBARYON

Brookhaven National Laboratory	M. May, S. White
University of California-Irvine	W. R. Molzon
University of California-Los Angeles	R. D. Cousins
Princeton University	V. L. Fitch, J. Klein, A. J. Schwartz
Stanford University	M. V. Diwan, K. Ecklund, G. M. Irwin, D. A. Ouimette, S. G. Wojcicki
Temple University	J. Belz, V. L. Highland, S. H. Kettell
University of Texas at Austin	C. A. Allen, G. W. Hoffmann, K. Lang, M. R. Marcin, J. McDonough, C. T. Nguyen, P. J. Riley, J. L. Ritchie. B. Ware, S. Worm
College of William and Mary	M. Eckhause, A. D. Hancock, C. Hoff, J. R. Kane, Y. Kuang, R. Martin, W.F. Vulcan, R. E. Welsh, R. G. Winter, M. Witkowski
Spokesmen:	**R. D. Cousins and A. J. Schwartz**

The experimenters searched for the *H* dibaryon (six-quark *uuddss* state) using the E791 beam line and spectrometer, modified for two *H* detection techniques. In both cases they attempted to produce the *H*'s in the proton-nucleus interactions. In the first technique, they searched for the decay sequence $H \rightarrow \Lambda X \rightarrow p\pi^- X$ in the decay volume. In the second, they looked for diffractive dissociation of long-lived *H*'s: $H + A \rightarrow \Lambda\Lambda A \rightarrow p\pi^- p\pi^- A$. Combined, the two methods cover a wide range of possible H lifetimes.

E888 completed data-taking in 1992 and is now analyzing data.

AGS Expt 889

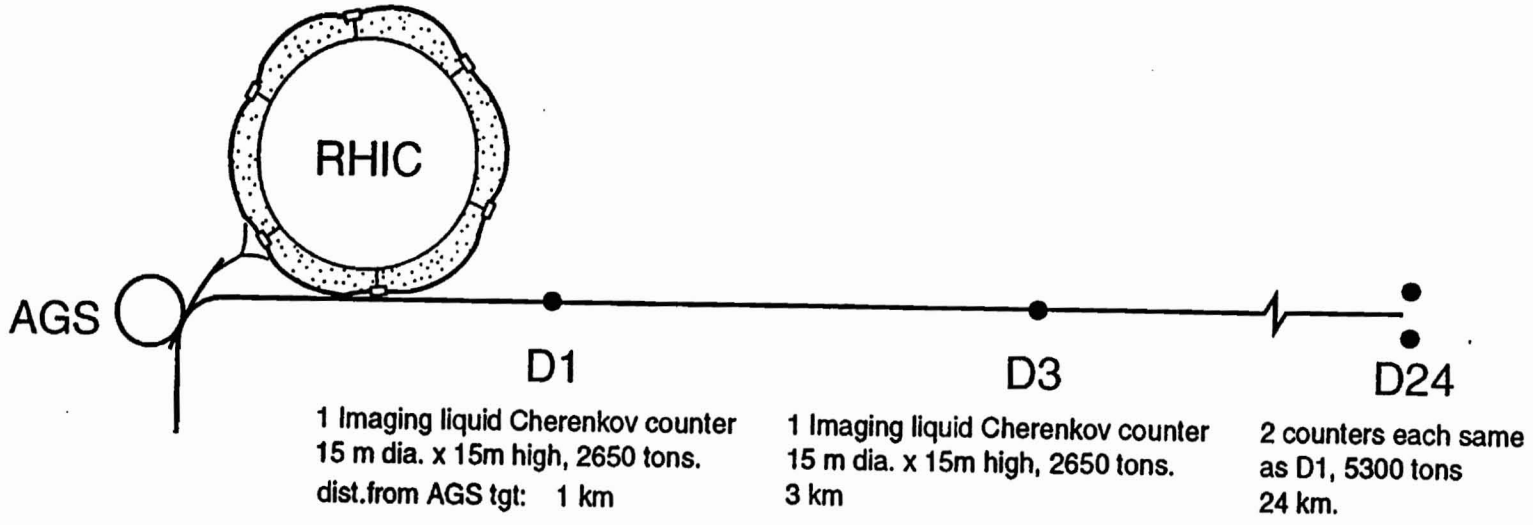
RHIC
AGS
D1
D3
D24
1 Imaging liquid Cherenkov counter
15 m dia. x 15m high, 2650 tons.
dist.from AGS tgt: 1 km
1 Imaging liquid Cherenkov counter
15 m dia. x 15m high, 2650 tons.
3 km
2 counters each same
as D1, 5300 tons
24 km.

Beam: U
Status: Approved
Hours Charged/Approved: 0/3000

EXPERIMENT 889 - LONG BASELINE NEUTRINO OSCILLATION SEARCH

Brookhaven National Laboratory	I-H. Chiang, M. Diwan, J. Frank, M. Murtagh, A. J. Stevens
University of California-Santa Barbara	D. Bauer, D. Caldwell, A. Lu, S. Yellin
Louisiana State University	R. L. Imlay, W. Metcalf
Louisiana Technical University	K. Johnston
University of New Mexico	B. Dieterle, R. Reeder
University of Montreal	G. Azuelos, P. Depommier, B. Moffet
University of Pennsylvania	J. Hill, A. K. Mann
Southern University and A & M College	A. Fazely
Temple University	V. Highland
University of Texas at Austin	C. F. Moore, S. Mordechai*
TRIUMF	J. Beveridge, P. Gumplinger, R. Helmer, J-M. Poutissou, D. Wright, S. Yen
Valparaiso University	D. D. Koetke, R. W. Mainweiler, T.D.S. Stanislaus
Spokesman:	**A. K. Mann**

A proposal is made here for a long baseline, ν_μ disappearance neutrino oscillation experiment at the AGS. The principal aim of the experiment is to explore the region in the vacuum oscillation space, Δm^2 vs $\sin^2 2\theta$, suggested by the results from studies of the interactions of atmospheric neutrinos in underground detectors. The proposed experiment consists of three linearly aligned, widely spaced, essentially similar, massive imaging water Cerenkov counters to be used in conjunction with a new, high intensity neutrino beam. The experiment will yield data of high statistical precision and small systematic uncertainty. It will extend the explored region in Δm^2 vs $\sin^2 2\theta$ by two orders of magnitude relative to previous accelerator based experiments, and has the prospect, if the atmospheric neutrino results are correct, of definitive identification of neutrino oscillations in the ν_μ-disappearance channel and of the specific values of Δm^2 and $\sin^2 2\theta$ involved. It may be the only means of determining a small ν_τ mass.

* Permanent Affiliation: Ben Gurion University, Israel

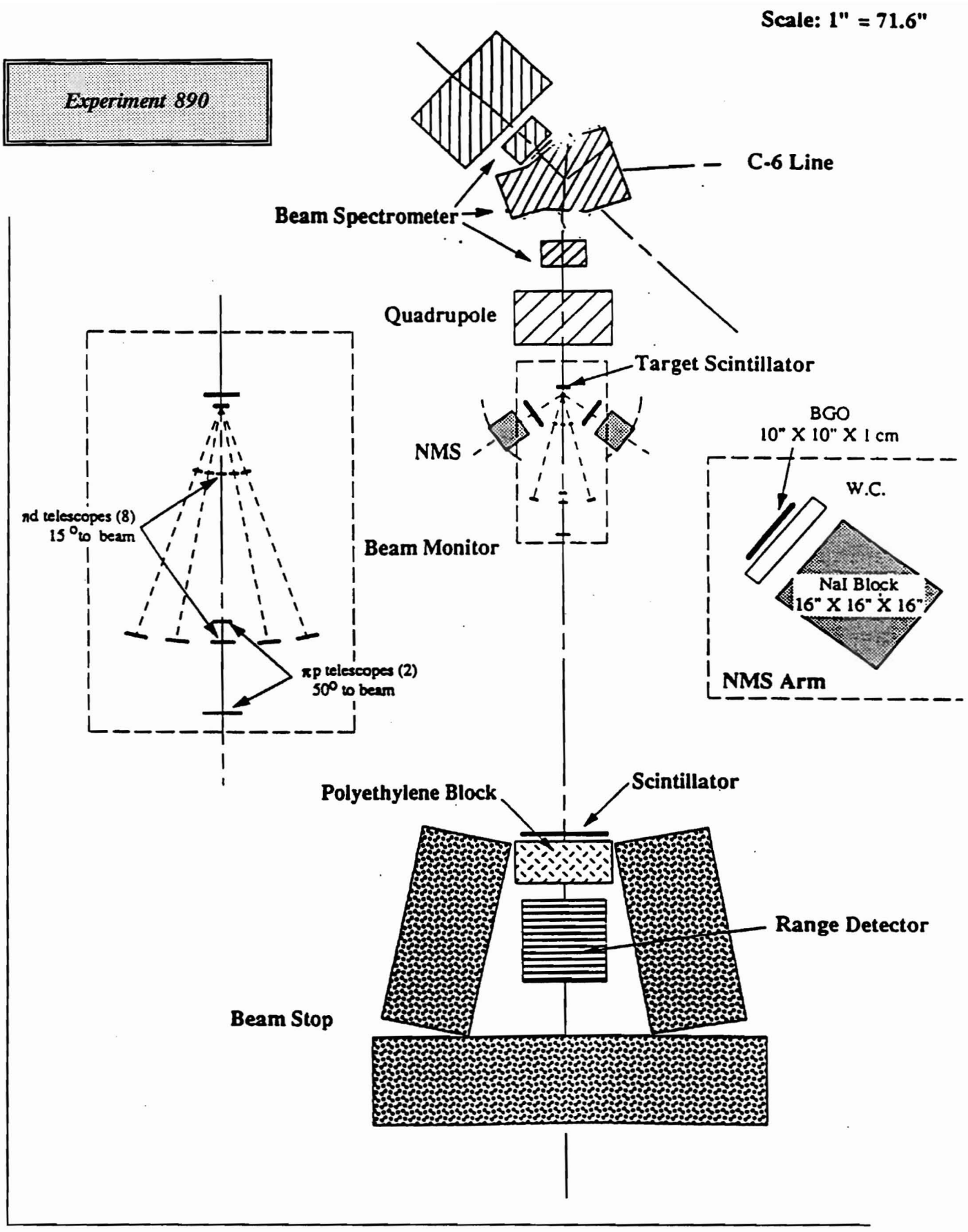
Scale: 1" = 71.6"
Experiment 890
C-6 Line
Beam Spectrometer
Quadrupole
Target Scintillator
NMS
BGO
10" X 10" X 1 cm
W.C.
NaI Block
16" X 16" X 16"
NMS Arm
πd telescopes (8)
15 °to beam
Beam Monitor
πp telescopes (2)
50° to beam
Polyethylene Block
Scintillator
Range Detector
Beam Stop

Beam: C8
Status: Running
Approved Hours: 579/1519

EXPERIMENT 890 - A NEW TEST OF CHARGED SYMMETRY IN ETA PRODUCTION ON DEUTERIUM

University of California-Los Angeles	M. J. Clajus, S. McDonald, B. M. K. Nefkens, J. W. Price, W.. B. Tippens, D. B. White
Brookhaven National Laboratory	S. Bart, R. E. Chrien, R. Sawafta, R. J. Sutter
Los Alamos National Laboratory	M. J. Leitch, J. C. Peng
Forschungszentrum Jülich	H. Seyfarth
Ruder Boskovic Institute	M. Batinić, A. Marušić, I. Šlaus, A. Švarc
George Washington University	W. Briscoe, T. Morrison
Spokesmen:	**B. M. K. Nefkens, R. E. Chrien, J. C. Peng**

The experimenters propose to measure R_1 from threshold at p_π = 607 MeV/c to the maximum C-8 beam momentum of 750 MeV/c which is beyond the peak of the $S_{11}(1535)$ resonance. They plan to measure the ratio R_2 at incident pion energies that span the opening of the η channel, p_π = 570 - 750 MeV/c. The measurement or R_1 is a direct test of the validity of charge symmetry in the unexplored domain of η-nuclear physics. Violations of charge symmetry are expected as a consequence of the difference in the $n\eta$ and $p\eta$ interactions as well as π° - η mixing.

A secondary objective of this proposal is to explore the dependence on the energy and angle of the $\pi^+ d \rightarrow pp\eta$ differential cross section, and the ratio of η production on protons and deuterons. The $\pi^+ d \rightarrow pp\eta$ reaction is being considered as the η production reaction of a new AGS η factory. New tests of C, CP, T, and CPT invariance can be done using various rare decays of the η.

The experiment intends to determine the ratios R_1 and R_2 by measuring the relative η and π° yields due to π^+ and π^- interactions in deuterium. The η or π° is detected via its $\gamma\gamma$ decay mode using a neutral meson spectrometer.

$$R_1 \equiv d^2\sigma(\pi^- d \rightarrow nn\eta)/d^2\sigma(\pi^+ d \rightarrow pp\eta)$$
$$R_2 \equiv d^2\sigma(\pi^- d \rightarrow nn\pi^\circ)/d^2\sigma(\pi^+ d \rightarrow pp\pi^\circ)$$

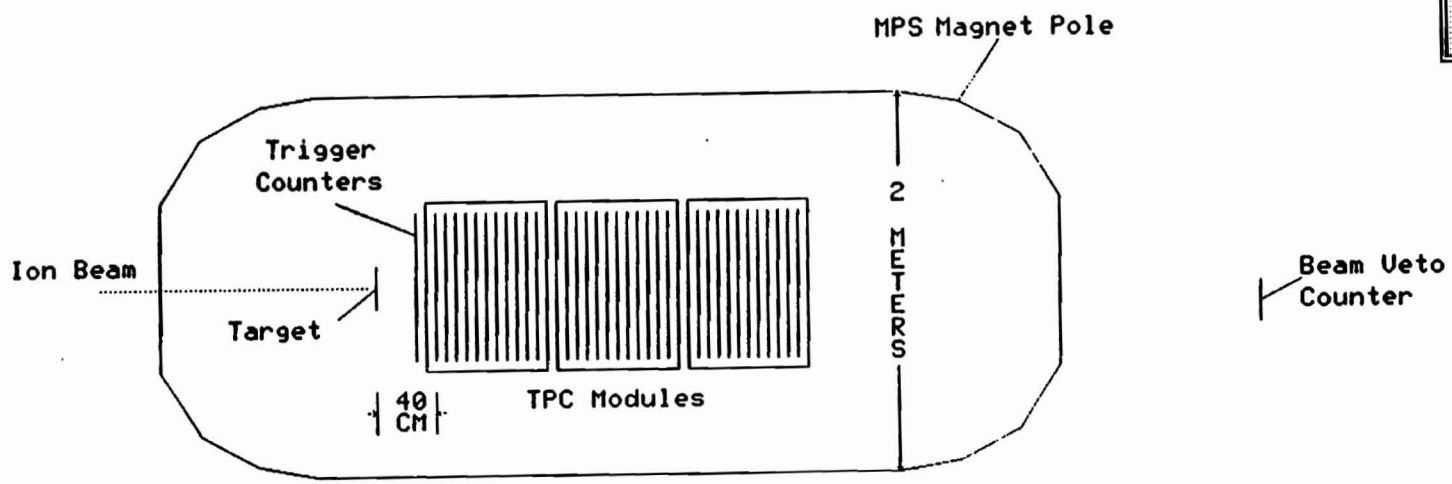

E-810 Plan View

Beam: A1
Status: Running
Approved Hours: 184/1000

EXPERIMENT 891 - A SEARCH FOR QUARK MATTER (QGP) AND OTHER NEW PHENOMENA UTILIZING AU-AU COLLISIONS AT THE AGS

Brookhaven National Laboratory	S. E. Eiseman, A. Etkin, K. J. Foley, R. W. Hackenburg, R. S. Longacre, W. A. Love, E. D. Platner
Brookhaven National Laboratory and City College of New York	S. J. Lindenbaum
University of California, Berkeley	J. Marx, L. Schroeder
City College of New York	C. S. Chain, E. Efstathiadis, M. A. Kramer, K. Zhao, Y. Zhu
Rice University	S. Ahmad, B. E. Bonner, J. A. Buchanan, J. M. Clement, G. S. Mutchler
Spokesmen:	**E. D. Platner**

A program is underway to study Au-Au collisions at the AGS by measuring the angles and momenta of charged tracks, K_s^0's and Λ's using the TPC's and trigger detectors from E810. In order to handle the higher track multiplicities produced by Au beams, a modified geometric arrangement of the TPC modules is used. This program allows the experimenters to look for anomalous behavior in rapidities (or pseudorapidities), multiplicity, strangeness enhancements, $P_\perp$ ($E_\perp$), energy flow; possibly observe Hanbury-Brown and Twiss effects and other new phenomena. These observations are on an event-by-event basis so that particularly interesting classes of events can be selected and added together to search for new effects (like strangelets) implying a QGP or other new states of matter in a manner which tends to maximize signal-to-background ratios.

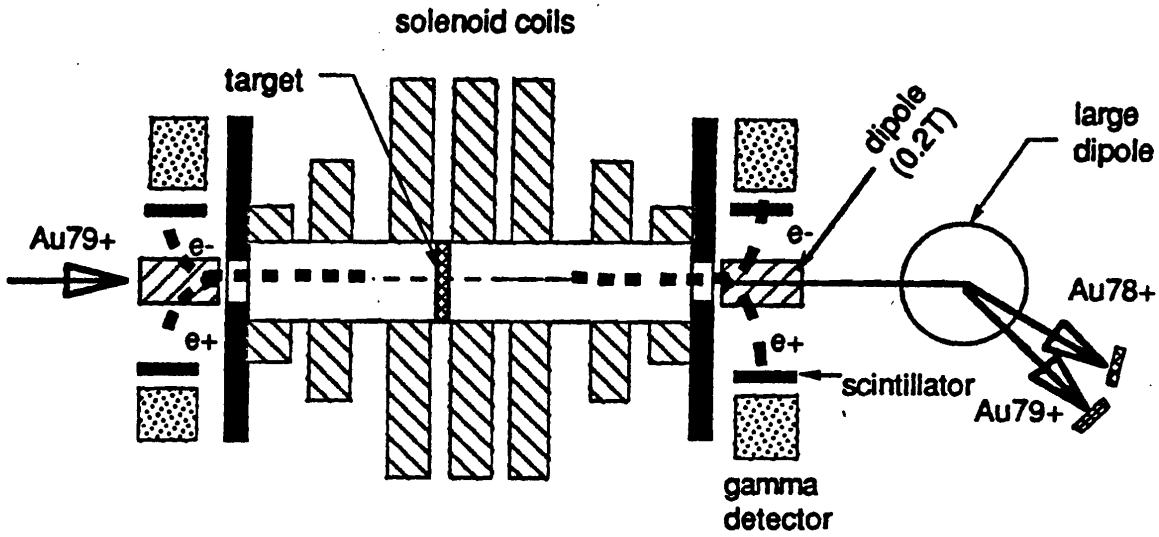

Schematic diagram of the apparatus. The adiabatically decreasing solenoid field (shown schematically by the coil height) transports and focuses the positrons. Small dipoles at either end deflect the positrons and electrons into the scintillator detectors. These detectors measure the positron energy and, from time of flight, determine the emission angle of the positron. Positrons are verified by the 511 keV annihilation radiation detected in the gamma detectors. A large dipole magnet(s) located downstream from the APS separates the charge states of the emerging ions.

Beam:
Status: Approved
Hours Approved: 600

EXPERIMENT 892 - CAPTURE FROM PAIR PRODUCTION

Lawrence Berkeley Laboratory	A. Belkacem, B. Feinberg, H. Gould
Brookhaven National Laboratory	B. Johnson, P. Thieberger, H. Wegner (retired)
Iowa State University	J. Hill, B. Libby
San Jose State University	D. Spooner
Stanford University	W. Meyerhof
Spokesman:	**H. Gould**

The experimenters propose to measure the cross section for capture from pair production and free pair production of 10 GeV/n Au^{79+} on Au collisions. This will provide the first measurement of capure from pair production at energies above the 1 GeV/n region. The results are essential to understand the process, to guide ongoing efforts, to develop a nonperturbative theory, and to supply important data for the operations of RHIC. Capture from pair production is the process in which an electron-positron pair is produced by the transient electromagnetic field from a relativistic heavy-ion atomic collision (no nuclear contact) and the electron emerges bound to the projectile ion. It is unique because it is the only recombination process in which the cross section *increases* with energy at relativistic energies. At sufficiently high energies it is predicted to become the dominant recombination mechanism.

Experiment 893

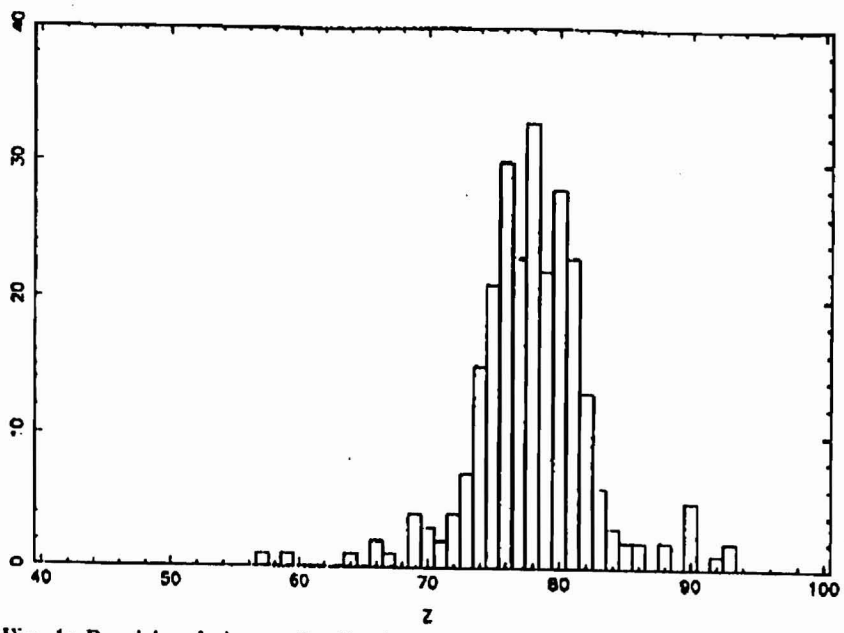

Fig. 1: Provisional charge distribution for 257 completely penetrating events.

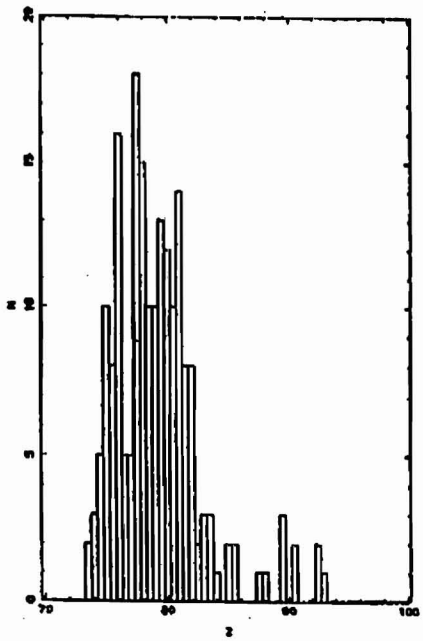

Fig. 2: Provisional charge distribution $Z > 73$ of selected data set (195 events).

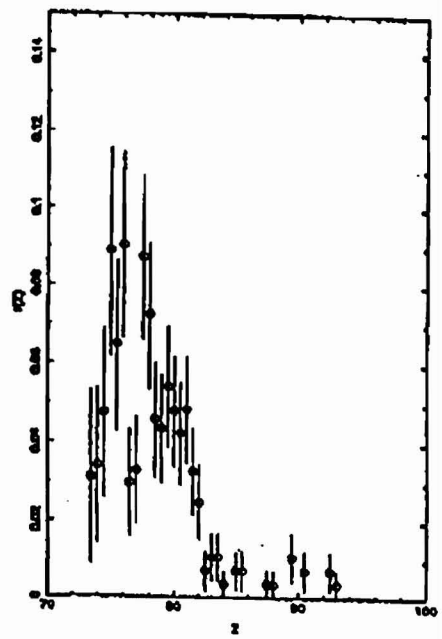

Fig. 3: Frequency distribution of apparent charge for selected events.

TABLE 1

		$(Z \geq 88)/(74 \leq Z \leq 87)$
Ariel-6	3 Actinides	0.045 ± 0.026
Ariel-6 + HEAO-3	3 + 0 Actinides	0.025 ± 0.015
10% of UHCRE	10 Actinides	0.035 ± 0.012
Propagated Primordial SS (Browster et al, 1983)		0.013
Propagated Present SS (Browster et al, 1983)		0.0077

Beam: B1
Status: In Progress
Hours Approved: 2/1

EXPERIMENT 893 - TEMPERATURE/ZENITH ANGLE CALIBRATION OF POLYCARBONATE TRACK DETECTORS

Dublin Institute for Advanced Studies

Spokesman: **A. Thompson**

This experiment proposes to measure the track response of polycarbonate to relativistic Au ions at -20°C and to investigate the isotropy of track response to Au at the same energy.

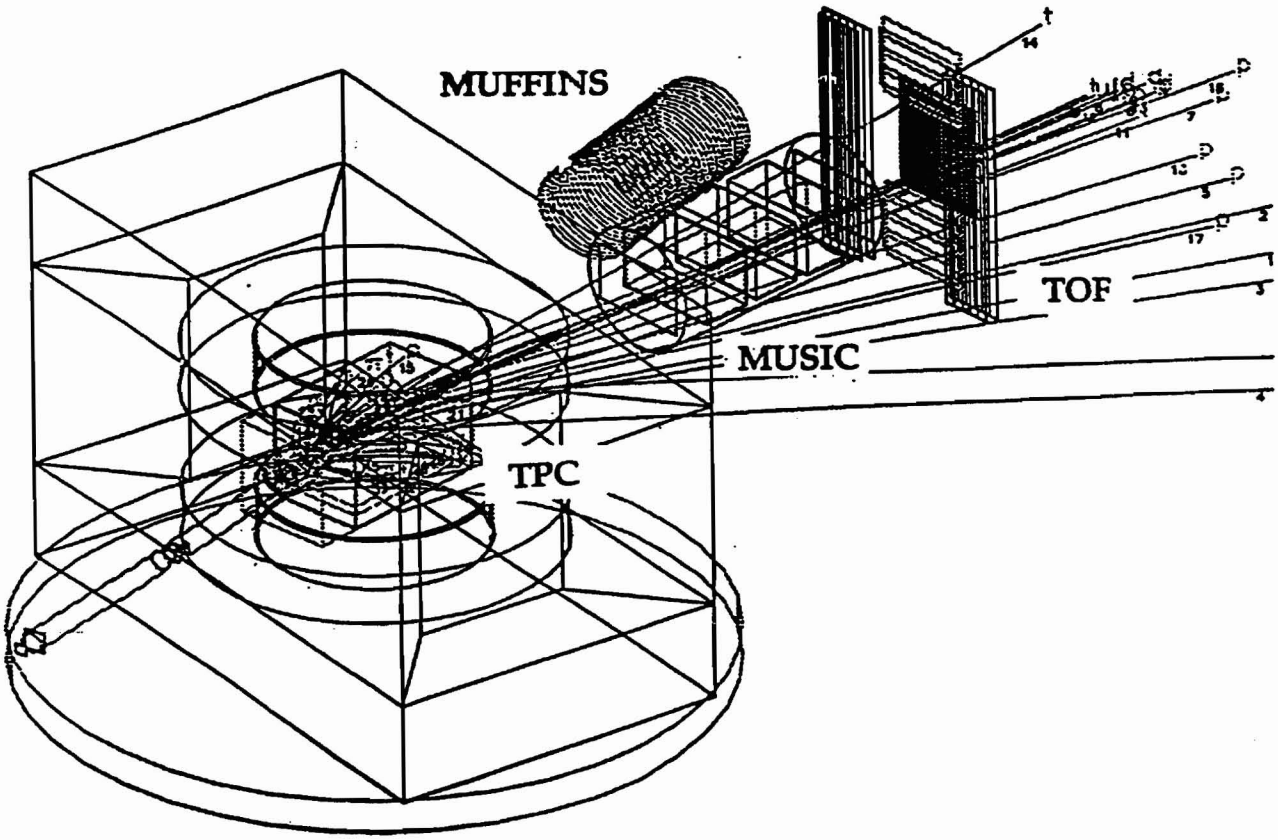

Proposed set-up for the EOS experiment at the AGS
(perspective view)

Beam: A1
Status: Conditionally Approved
Hours Requested: 1688

EXPERIMENT 895 - EXCLUSIVE STUDY OF NUCLEAR COLLISIONS AT THE AGS

University of California, Davis	P. Brady, D. Cebra, M. Partlan, J. Romero
INFN Catania, Italy	S. Albergo, Z. Caccia, A. Insolia, R. Potenza, J. Romanski, G. V. Russo, C. Tuve
Kent State University	M. Justice, D. Keane, H. Liu, S. Wang, D. Weerasundara
Lawrence Berkeley Laboratory	W. Gong, L. Heilbronn, J. Miller, D. Olson, G. Rai, J. Rasmussen, H. G. Ritter, H. Wieman, Z. Zeitlin
Lawrence Livermore Laboratory	G. Peilert
Purdue University	A. Hirsch, E. Hjort, N. Porile, R. Scharenberg, B. Shrivastava
State University of New York at Stony Brook	J. Alexander, M. Gilkes, R. McGrath, R. Lacey
Texas A&M	A.D. Chacon, K. Wolf
University of Texas, Austin	J. Hoffmann, F. Moore
Spokesmen:	**G. Rai**

The experimenters propose to carry out a systematic and exclusive measurement of the energy (2-10 A GeV) and mass dependence of particle production, correlations, and collective flow effects in Au+Au collisions. They seek to determine the highest compression achievable in nuclear matter and to study its properties and they will search for evidence for an exotic Equation of State, that is, new physics such as Resonance Matter, Exotica, and QGP. The experimenters are also interested in signatures of critical phenomena in dilute nuclear matter.

It is proposed to measure the four-momentum of light mass particles ($\pi^{\pm}$, K_s^0, $K^{\pm}$, Λ, n, p, d, ^{3}He, ^{4}He, ^{6}He, and the isotopes of Li and Be), projectile fragments from Z=6 to Z=79, and anti-proton production. The majority of the data will be acquired, on an event by event basis, from a state-of-the-art Time Projection Chamber (EOS TPC) built and used at LBL by the EOS collaboration. The TPC provides continuous tracking, almost 4π acceptance and particle identification for the light mass particles.

E896 H_0 Search Experiment Layout

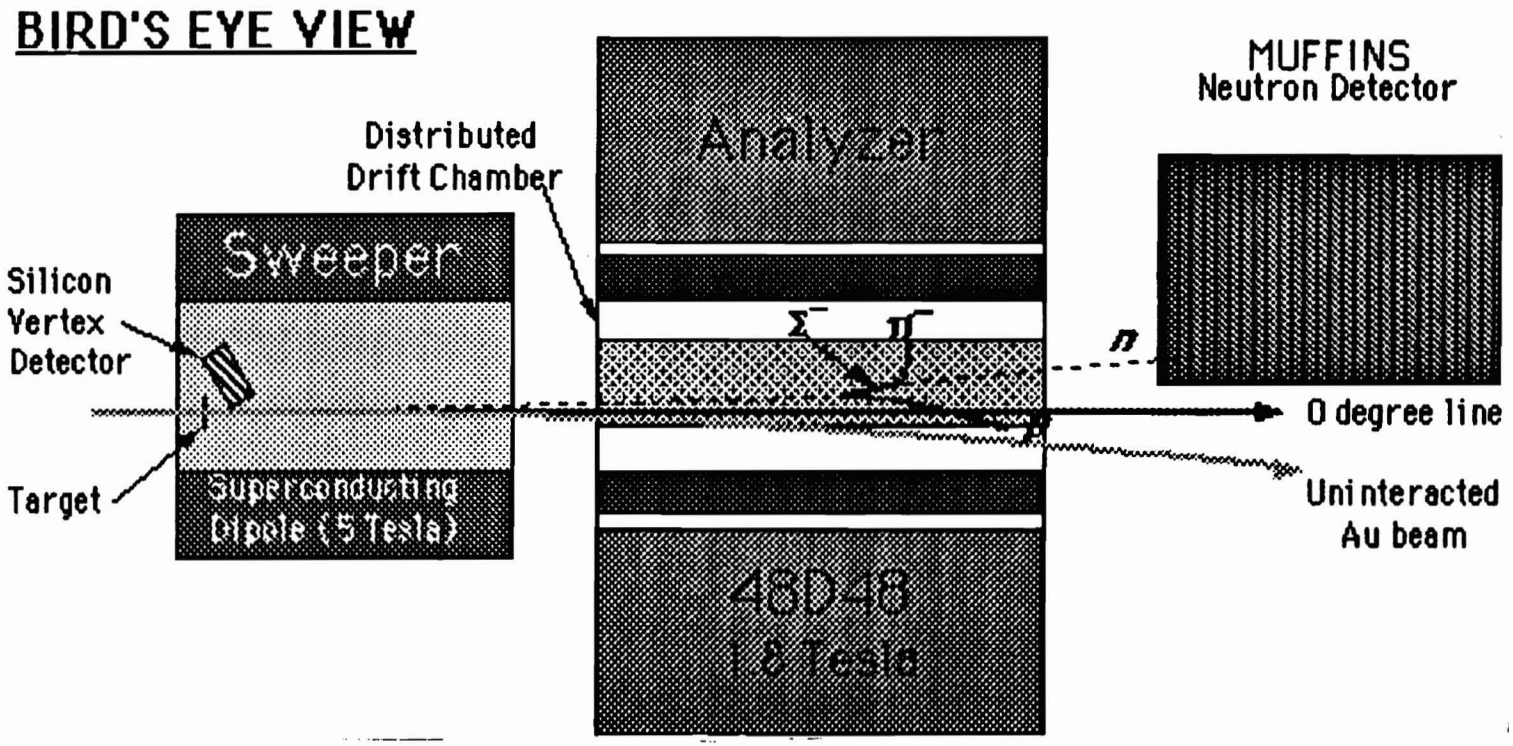

Beam: C5
Status: Approved
Hours Requested: 1000

EXPERIMENT 896 - A PROPOSAL TO THE BNL AGS: TO SEARCH FOR A SHORT-LIVED H_0 DIBARYON, SHORT-LIVED STRANGE MATTER, AND TO INVESTIGATE HYPERON PRODUCTION IN 11.6 A GEV/C AUAU COLLISION

Space Science Laboratory	H. Crawford, Y. Dardenne, J. Engelage, L. Greiner
University of California-Los Angeles	T. Hallman
Wayne State University	R. Bellwied, L. Dou, J. Hall, V. Rykov
Johns Hopkins University	W. Christie, L. Madansky, R. Welsh
University of California-Berkeley	K. Crowe
Brookhaven National Laboratory	R. Debbe, A. Etkin, E. Platner
Columbia University	S. Nagamiya
Lawrence Berkeley Laboratory	L. Greiner, P. Lindstrom, J. Marx, I. Sakrejda
University of Texas-Austin	G. Hoffman, F. Moore, P. Riley, J. Schambach
University Space Research Assn.	J.W. Mitchell
University of Catania	R. Potenza, S. Costa, J. Romanski
CERN	P. Sonderegger
Spokesmen:	**H. Crawford and T. Hallman**

The experimenters propose to search for the H_0 dibaryon state and for new states of nuclear matter produced in nucleus-nucleus (AA) collisions at the AGS. This experiment enhances the existing AA program by extending the search into regions of short lifetime, $\approx \tau_\Lambda$, and complements the existing double-strangeness exchange (Ξ-p) program by offering access to a new, more probable doorway channel, the coalescence of two Λ^0s into a bound di-lambda. The proposed detector is capable of unambiguously identifying the topological signature of unstable particle decays as well as the rigidity of each charged particle produced, affording a sensitive search for new metastable states and investigation of the properties of known strange particle states.

Experiment 898

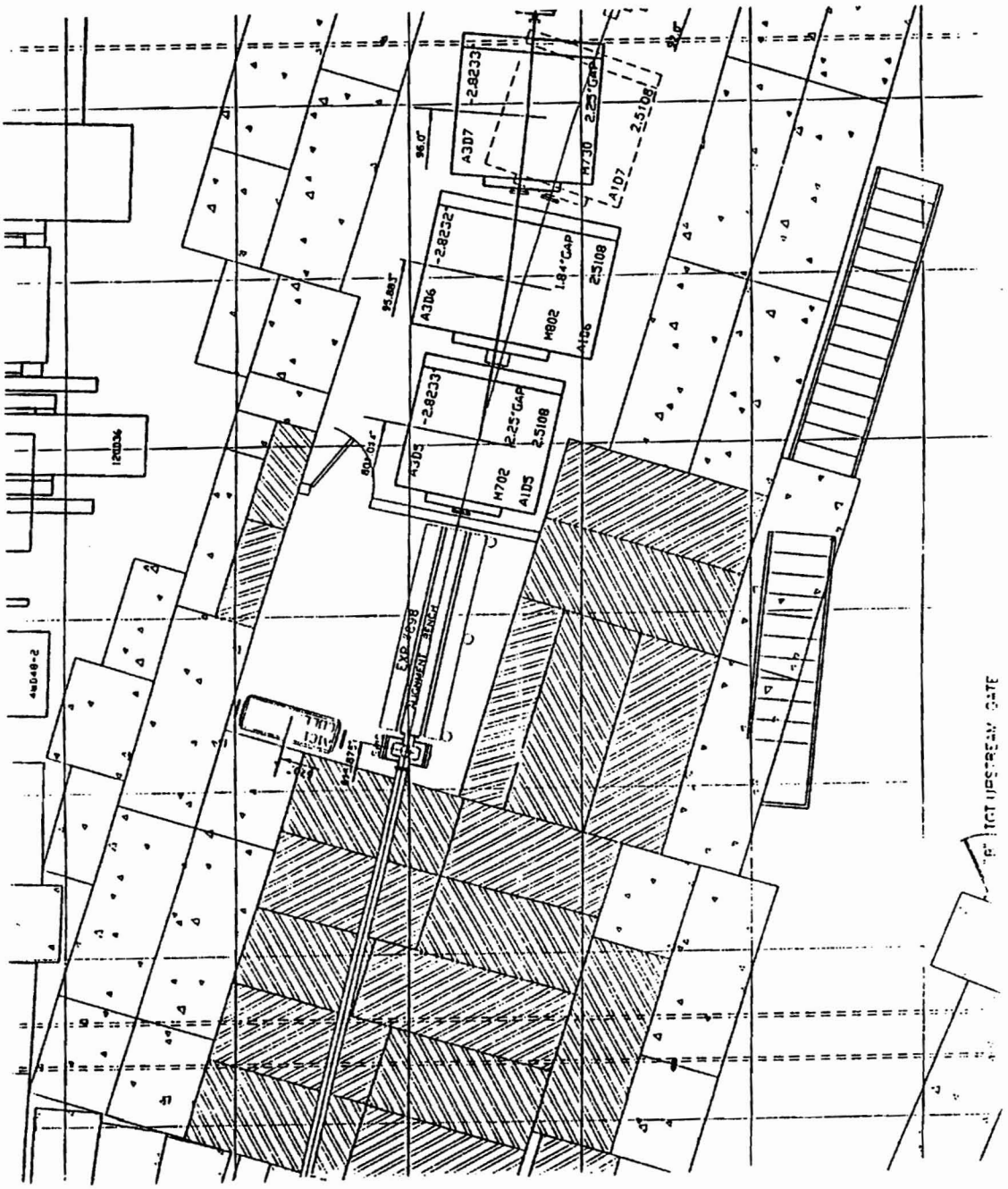

Beam: A3
Status: Running
Hours Charged/Approved: 0/240

EXPERIMENT 898 - GENETIC AND EPIGENETIC EFFECTS PRODUCED BY HIGH ENERGY HEAVY IONS

University of California-Davis	L. M. Wiley, O. G. Raabe
Colorado State University	C. Waldren
Columbia University	M.Vazquez, B. V. Worgul
Jet Propulsion Laboraory	G. A. Nelson
Lawrence Berkeley Laboratory	M. H. Barcellos-Hoff, P. Cooper, J. Miller, A. Kronenberg
Spokesmen:	**J. Miller, A. Kronenberg, G. A. Nelson**

This experiment proposes to study the genetic consequences of heavy ions (principally 1 GeV/u^{56}Fe) in a hierarchy of biological systems. The biological effects of densely ionizing radiation will be studied for a number of genetic endpoints and cellular endpoints having a genetic component, constituting a broad range of quantifiable endpoints for the molecular to the whole animal level, in some cases including genetic responses over several generations. The biology experiments will be supported by physics components designed to provide basic dosimetric information as well as the detailed characterization of the radiation field essential for the accurate interpretation of biological data.

Beam:D6
Status: Completed 1993
Hours Requested: 28/24

EXPERIMENT 899 - HIGH ENERGY PION-INDUCED NUCLEAR FRAGMENTATION

University of Colorado	R. J. Peterson
Federal University of Rio de Janeiro	S. de Barros
University of the State of New York, Stony Brook	R. McGrath
PINSTECH	H. A. Khan, N. A. Khan,
Spokesmen:	**R. J. Peterson**

Experiment 899 measured pion-induced fragment cross sections for multiplicities of up to four with Solid State Nuclear Track Detectors (SSNTD) directly in beams of π^- from 350 to 1460 MeV kinetic energy. A recent exposure at LAMPF measured fission cross sections but not multiplicities at negative pion energies of 350 and 500 MeV. Five beam energies across a higher energy range are required; targets of several heavy elements to each beam within the same stack of detectors with samples will be exposed.

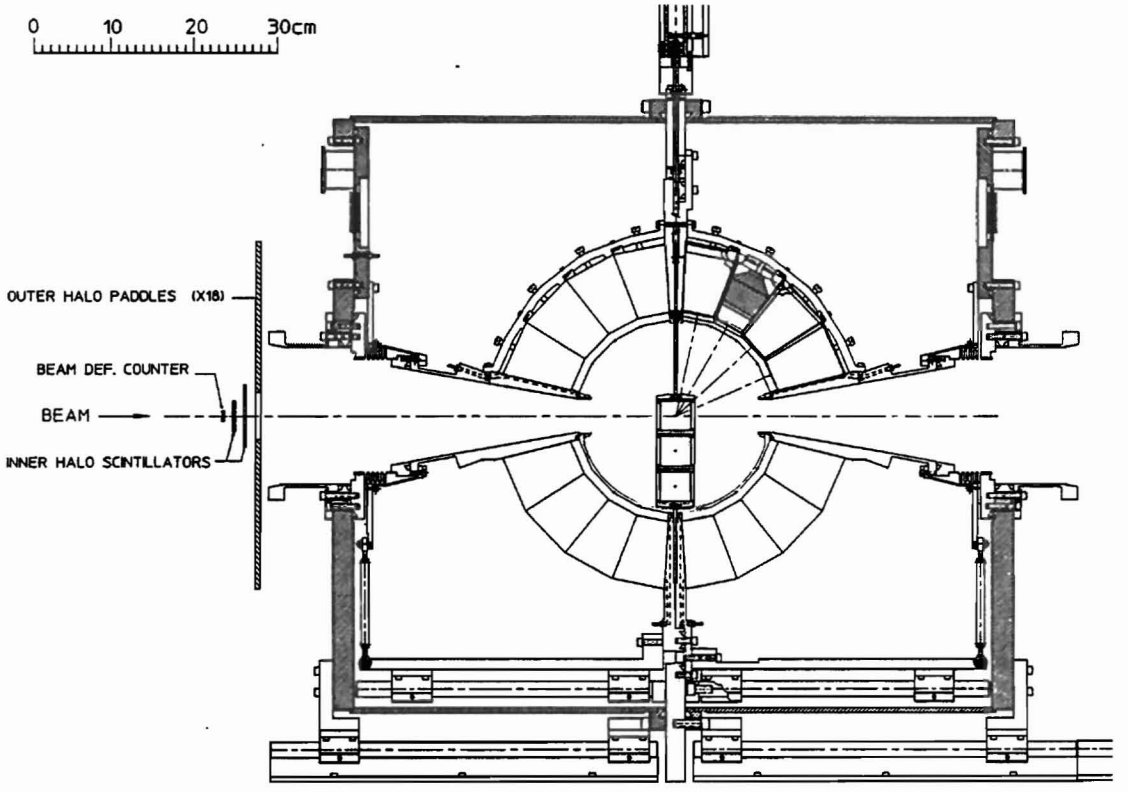

Engineering drawing of ISiS.

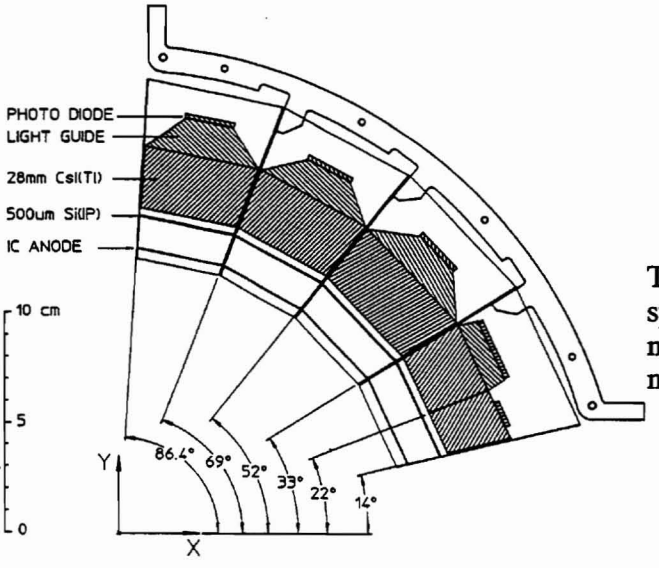

Telescope configuration for forward hemisphere array. Each unit is part of an 18-member ring; forward-most element is segmented into two halves.

Beam:C5
Status: Approved for Tests
Hours Charged/Approved: 0/600

EXPERIMENT 900 - ENERGY DISSIPATION AND MULTIFRAGMENTATION IN H + A REACTIONS BETWEEN 2 AND 24 GEV/C

Indiana University	K. Kwiatkowski, V. E. Viola, G. Wang, N. R. Yoder
Simon Fraser University	R. Korteling
University of Maryland	H. Breuer, P. G. Roos
Michigan State University	W. G. Lynch, M. B. Tsang
CEA Saclay	R. Legrain, E. C. Pollaco, C. Volant
Brookhaven National Laboratory	L. P. Remsberg
Spokesmen:	**K. Kwiatkowski and V. E. Viola**

Exclusive studies of target fragmentation in 2 - 28 GeV/c hadron (p, $\bar{p}$ and π^-)-induced reactions are proposed. Measurements will be performed with the Indiana Silicon Sphere 4π detector array, capable of identifying H and He isotopes and Z = 3 - 20 fragments for target rapidity ejectiles over a wide dynamic range. The primary physics objectives are twofold: (1) to improve the understanding of energy dissipation phenomena for central collisions in the h + A reaction at relativistic energies, and (2) to examine the decay modes of hot nuclear matter excited by simple hadron probes. The bombarding energy regime is chosen to overlap the region in which previous inclusive measurements at AGS have been interpreted in terms of a liquid-gas phase transition in hot finite nuclei. It is in this energy region that the excitation of Δ, N* and higher resonances provide an effective means of dissipating projectile energy into internal excitation energy of the target nucleus. Thus, these data will place fresh constraints on the new generation of transport codes, as well as current models of mulifragmentation.

Beam: A
Status: Completed 1993
Hours Charged/Approved: 1/24

EXPERIMENT 903 - A STUDY OF DOMAIN WALL PINNING IN IRRADIATED SAMPLES OF $ND_2FE_{14}B$

Brookhaven National Laboratory C. L. Snead

Ames Laboratory P. C. Canfield, R. W. McCallum, D. K. Finnemore

Spokesman: **C. L. Snead and D. K. Finnemore**

The experimenters propose to irradiate specimens of permanent-magnet materials so that the defect pinning of magnetic domain walls due to particle tracks can be evaluated.

There will be an assortment of 10 samples ranging in thickness from 0.1 to 1.0 mm, each being about 1 mm square. The most interesting spacing for the damage tracks is in the range of 10 to 100 nm which implies irradation to a dose of about 10^{10} ions per cm^2. After the samples have been irradiated and characterized, annealing experiments will be carried out to determine the micro-structural changes induced by the annealing and the corresponding changes in domain wall pinning and performance characteristics of the material. To begin, some samples will be irradiated parallel to the c-axis and others at 45° to the c-axis.

Beam:
Status: Approved
Hours Charged/Approved: 0/35

EXPERIMENT 904 - A STUDY OF COLUMNAR PINNING CENTERS IN HIGH T_C SUPERCONDUCTOR

University of Houston	J. Liu, D. Parks, Y. Ren, R-P Sawh, R. Weinstein
Texas Southern University	V. Obot
Indiana University Cyclotron Facility	C. C. Foster
Spokesman:	**R. Weinstein**

The experimenters will irradiate several stacks of YBCO tiles. The chemistry ($Y_{1.7}Ba_2Cu_3Pt_{0.01}$) of these tiles, and their heat processing and oxygen annealing, are the best known at present for field trapping. One set of tiles will each be 20 mm in diameter and 8 mm thick. A stack of several such tiles will be used. As the Au ions penetrate, dE/dx increases. The ions will first form string-of-beads defects. This experiment will provide a string-of-beads test for the first time and will provide the materials to produce a trapped field magnet (TFM) of greater field than any previously achieved. The experimenters estimate that the field will be 5 Tesla at 77K, and 12.5 Tesla at 65K.

In addition, 4 sets of smaller tiles (3.7 mm in diameter and 2 mm thick) will also be irradiated. The small size of the tiles in these runs in these runs is suitable to VSM or SQUID measurement of the magnetic moment and hence J_C. These runs will provide a desirable cross check on the large scale analysis of J_C via trapped field. In order to get the same fluence as in the case of 20 mm diameter tiles, these smaller tiles require 1/16 of the beam x time. The 4 sets of tiles will be run at 4 values of fluence.

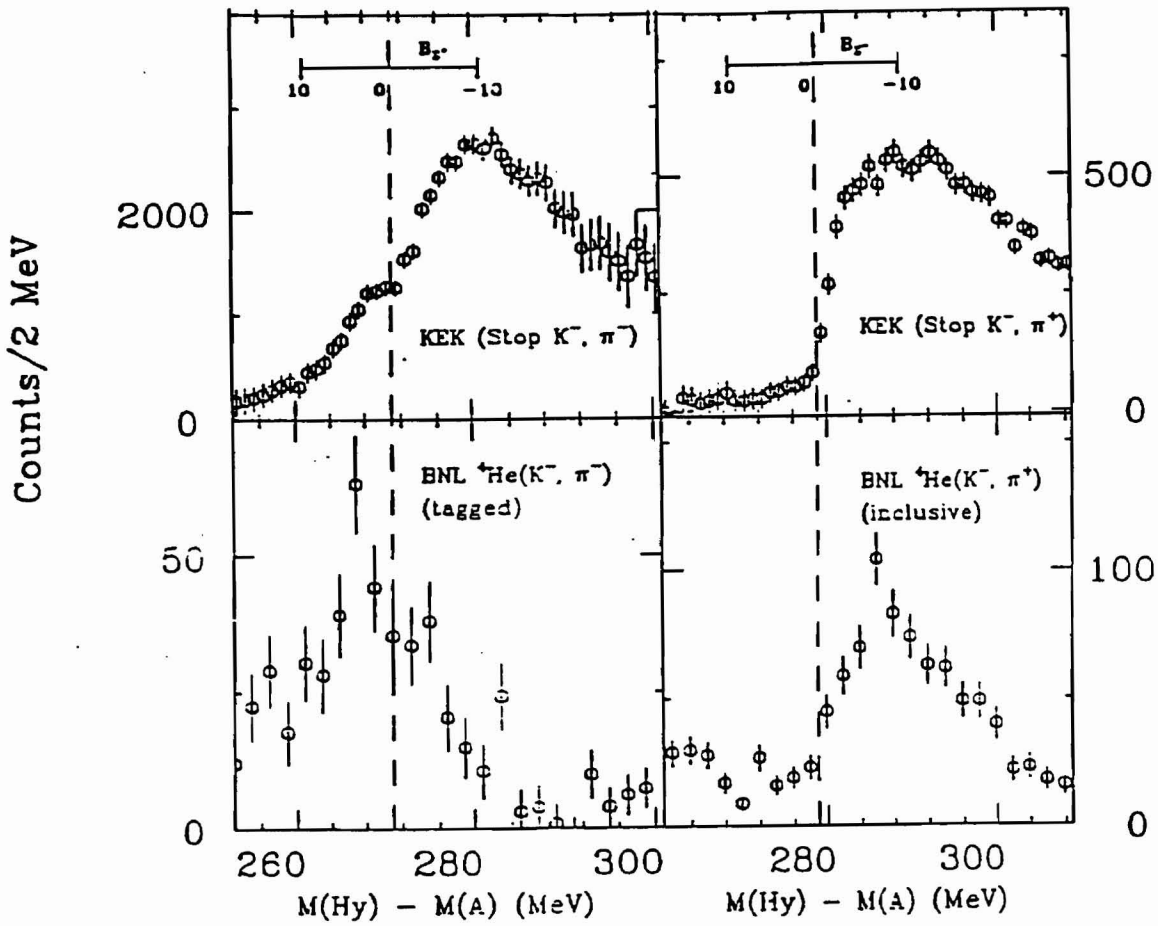

A comparison of the in-flight (BNL) observations of the Σ-structure in ^{4}He and the stopped kaon experiments at KEK. In both sets, the structure is present in (K^-,π^-) reactions, but not for (K-,π^+).

Beam:C6
Status: Approved
Hours Charged/Approved: 0/400

EXPERIMENT 905 - SEARCH FOR A Σ HYPERNUCLEAR BOUND STATE IN ^{4}HE (K^-, $\pi^\pm$) REACTIONS

Brookhaven National Laboratory	S. Bart, R. E. Chrien, R. Sawafta, R. Sutter
University of Tokyo	R. S. Hayano, Y. Shimizu, H. Tamura
INS-University of Tokyo	T. Fukuda, T. Nagae, H. Outa
Ohio University	K. Hicks and Students
University of Houston	E. V. Hungerford and Students
Spokesman:	**T. Nagae**

The evidence for the existence of Σ (bound)-nuclei derives from three experiments: the first in a ^{4}He bubble chamber at the AGS, the second at KEK with stopped K^- in ^{4}He, and the third, BNL experiment E774. The purpose of E905 is to remeasure helium, using in-flight reactions to verify the existence of a bound state and to obtain the binding energy and width with high precision. This would accomplished by making use of experience gained in BNL's E774 and E887 to get better control of systematic errors, suppress backgrounds due to electrons and muons and to obtain increased statistics. The precise measurement of the position and width of the postulated bound state may allow a definite allocation of the structure observed in these experiments to a bound state or to a threshold cusp, which is an alternative explanation. The precise measurement of the Σ-production cross sections in the bound and unbound regions will allow a choice between competing model explanations.

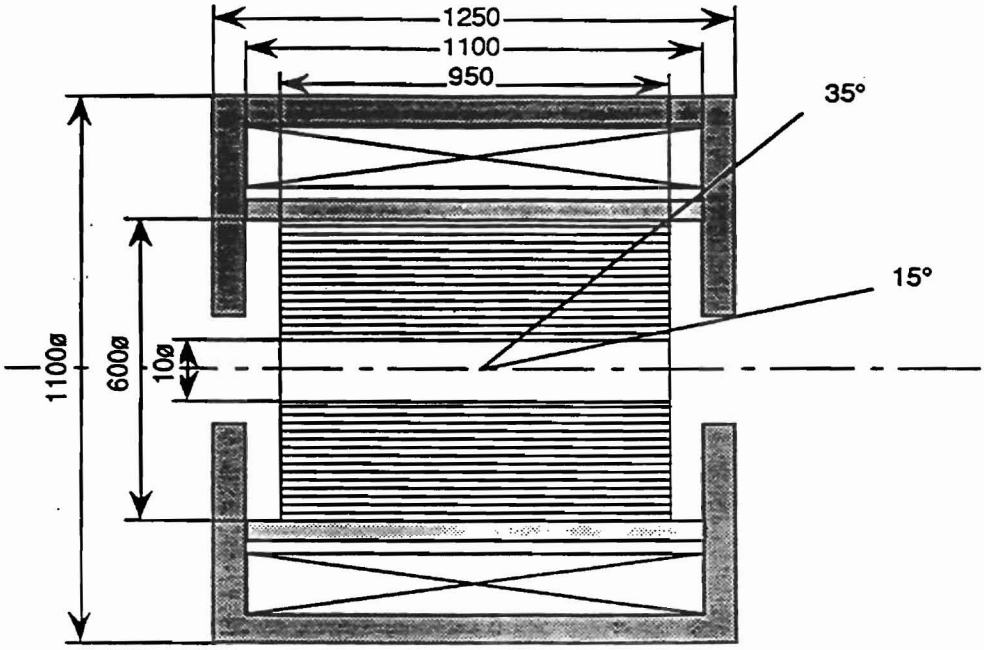

Schematic view of the present design of the CDS.

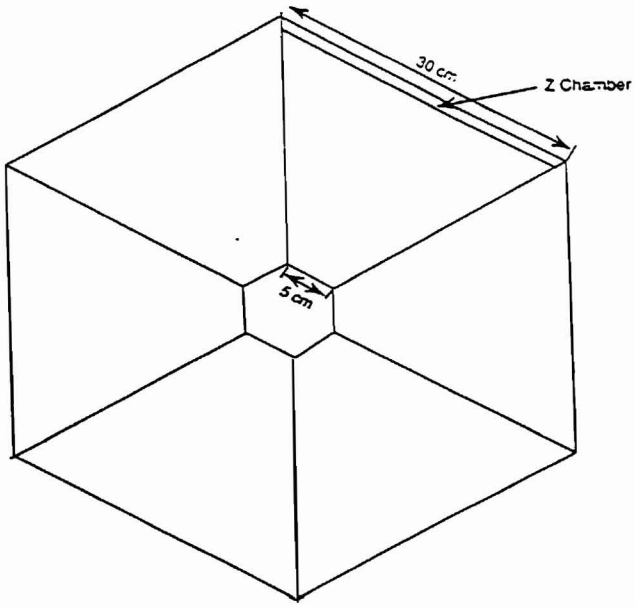

Schematic endpoint view of the CDC.

Beam:D6
Status: Approved
Hours Charged/Approved: 0/1200

EXPERIMENT 906 - EXPERIMENT TO DETECT DOUBLE-Λ HYPERNUCLEI BY OBSERVING CHARACTERISTIC II - MESONIC DECAYS

INS-University of Tokyo	T. Fukuda, T. Nagae, J. Nakano, K. Omata, M. Sekimoto
Brookhaven National Laboratory	S. Bart, R. E. Chrien, M. May, P. Pile, R. Sawafta, R. Sutter
Carnegie-Mellon University	G. B. Franklin, C. Meyer, B. P. Quinn, R. A. Schumacher
Gifu University	M. Hanabata, K. Nakazawa
INR-Russia	M. Prohvatilov, V. Rasin,
Kyoto University	K. Imai, K. Yamamoto, M. Yosoi
Kyoto-Sangyo University	K. Okada, F. Takeutchi
Rutgers University	R. D. Ransome
TRIUMF	D. R. Gill
University of Manitoba	J. Birchall, C. A. Davis, L. Gan, L. Lee, S. A. Page, W. D. Ramsay, W. T. H. van Oers
University of New Mexico	B. Bassalleck, H. Fischer, J. Lowe, D. M. Wolfe
Spokesmen:	**T. Fukada and R. E. Chrien**

The experimenters propose a new way to produce and to identify several hundred double-Λ hypernuclei by observing two (successive) mesonic-decay pions with about 1.7 MeV resolution. The rate is larger by two orders of magnitude than other experiments done so far and will enable us to open a new spectroscopy of double-Λ hypernuclei.

Double-Λ hypernuclei will be produced at the (K^-, K^+) reaction point through multi-step processes and successive mesonic-decay pions will be detected by a cylindrical detector system and solenoidal magnetic spectrometer (CDS) surrounding the target. The 2 GeV/c kaon beam line and the same experimental setup used for E813 and E836 (with some minor modifications), will be used for this experiment.

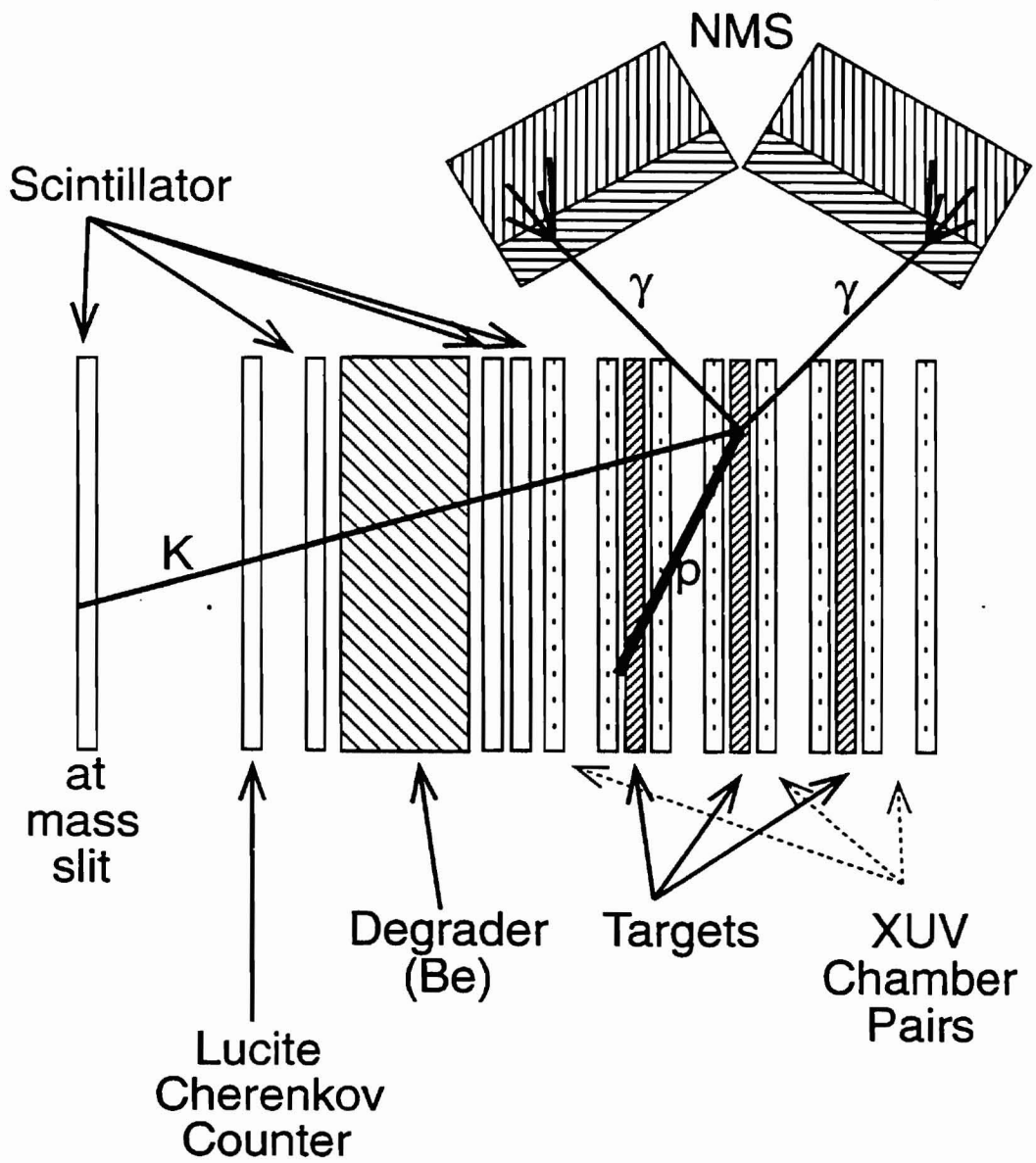

Schematic layout of the experimental setup.

Beam: C8
Status: Approved
Hours Charged/Approved: 0/1450

EXPERIMENT 907 - INVESTIGATION OF LIGHT HYPERNUCLEI USING THE (K^-_{STOP} , π^0) REACTION

Ben-Gurion University and University of Texas at Austin	S. Mordechai
Brookhaven National Laboratory	S. Bart, R. E. Chrien, M. May, P. H. Pile, R. Sawafta, R. Sutter
Carnegie-Mellon University	A. Berdoz, G. B. Franklin, R. Magahiz, C. A. Meyer, B. Quinn, R. A. Schumacher
University of Colorado	R. J. Peterson
Hampton University	L. Tang
University of Houston	E. V. Hungerford, B. W. Mayes, L. S. Pinsky, K. Lan, M. Ahmed
University of Kentucky	V. Zeps
Louisiana Tech University	K. Johnston
Los Alamos National Laboratory	J. C. Peng, H. A. Thiessen
University of Minnesota	D. Dehnhard, M. Espy, J. M. O'Donnell
Inst. for Nuclear Research, Moscow	A. B. Kurepin
Rudjer Boskovic Institute	I. Supek
University of Texas at Austin	G. Glass, C. Fred Moore, H. Ward
University of Zagreb	M. Furic
Spokesmen:	**E. Hungerford, A. Thiessen and Jen-Chieh Peng**

The experiments propose to use the combination of a multi-layer active target and the Neutral Meson Spectrometer (NMS) to detect π^0s in order to study hypernuclear physics. The reaction to be used is (K^-_{stop} ,π^0), with stopping K^- obtained from the LESB-II(C) beam line at he AGS. The NMS will be moved from LAMPF to BNL for this experiment.

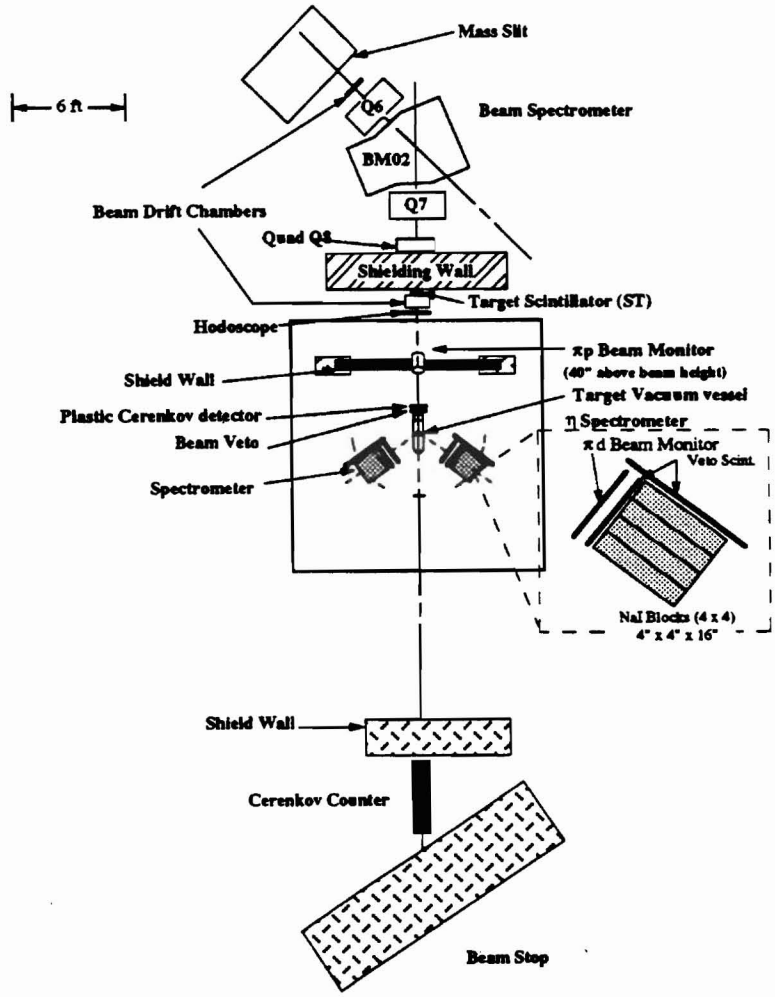

E890 Layout

Experimental setup for E890 including changes necessary for using a kaon beam.

Beam: C8
Status: Approved
Hours Charged/Approved: 0/600

EXPERIMENT 909 - ETA PRODUCTION AT THRESHOLD IN THE REACTIONS $\pi^- p \rightarrow \eta n$ and $K^- p \rightarrow \Lambda\eta$

George Washington University	W. J. Briscoe, T. W. Morrison, Z. Papandreou, S. Philips, J. Prokop, C. Bennhold, R. Pratt
University of California-Los Angeles	M. Clajus, S. McDonald, T. Moriwaki, B. M. K. Nefkens, W. B. Tippens, D. White
Brookhaven National Laboratory	S. Bart, R. E. Chrien, R. Sawafta, D. Sutter
Abilene Christian University	M. E. Sadler, L. D. Isenhower
Rudjer Boskovic Institute	A. Marusic, I. Šlaus
Joint Institute for Nuclear Research-Dubna	A. Efendiev
PNPI, Gatchina	V. Abaev, V. Bekrenev, N. Koslenko, S. Kruglov
Spokesmen:	**W. J. Briscoe and W. B. Tippens**

The threshold for η production in the reactions $\pi^- p \rightarrow \eta n$ and $K^- p \rightarrow \Lambda\eta$ is close to the mass of the $S_{11}(N^*(1535)$ and S_{01} $(\Lambda^*(1670)$ resonances, respectively. The cross section for η production in both reactions is unexpectedly large as are other η threshold production cross sections. Better quality data, particularly angular distributions which are currently lacking, in both the K^-p and π^-p reactions are needed to understand the role of these resonances near the η threshold. There is a factor of four discrepancy in the determination of the ηN scattering length and the $\eta\Lambda$ scattering length is unknown due to a lack of precise threshold cross section data. New, precision data at threshold would allow better determinations of these scattering lengths.

The experimenters propose to measure total cross section, as well as angular distributions for η production in both of these reactions from threshold (P_π = 685 MeV/c, and P_K = 723 MeV/c) up to 760 MeV/c. The η particles are detected via the 2γ decay mode using the improved η spectrometer currently in operation on the C8 beam line.

List of publications of AGS experiments begins here.

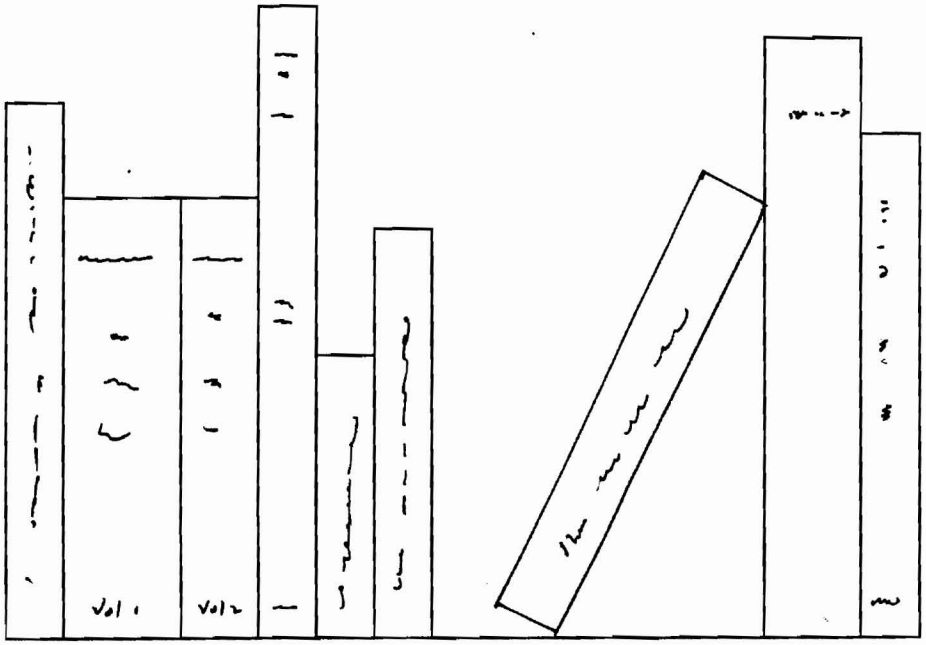

Publications - AGS Experiments 1982 - 1994

This listing was originally prepared using the SLAC data base SPIRES; we now rely on the experimenters themselves to supply us with information. It is easy to miss publications in such a wide search and we apologize for any left out or misidentified. Please let us know about these as well as keeping us posted on your recent publications of AGS experiments.

723 D. W. Hertzog *et al.*, Phys. Rev. Letts. *51*, 1131 (1983), "Precision measurement of the magnetic moment of the Σ^-".

734 L. A. Ahrens *et al.*, Phys. Rev. *D35*, 785 (1987), "Measurement of neutrino-proton and anti-neutrino-proton elastic scattering".

L. A. Ahrens *et al.* Nucl. Instr. Meth. *A254*, 5515 (1987), "A massive fine-grained detector for the elastic reactions induced by neutrinos in the GeV energy region."

L. A. Ahrens *et al.* Phys. Rev. *D34*, 75 (1986), "Determination of the neutrino fluxes in the Brookhaven wide-band beams".

L. A. Ahrens *et al.* Phys. Rev. Letts. *56*, 1107 (1986), "Precise determination of $\sin^2$-theta-w from measurements of the differential cross-sections for muon-neutrino p → muon-neutrino p and anti-muon-neutrino p → anti-muon-neutrino p."

L. A. Ahrens *et al.* Phys. Rev. Rev. *D31*, 2732 (1985), "New limit on the strength of mixing between ν_μ and νe."

L. A. Ahrens *et al.* Phys. Rev. Letts. *54*, 18 (1985), "Measurement of the ratio of cross-sections for neutrino and anti-neutrino-scattering from electrons."

745 M. May *et al.* "3d-3p Transition in $(\mu^- He^4)^+$," Proceedings of Workshop on Fundamental Muon Physics: atoms, nuclei and particles, Los Alamos (1986).

A. Blaer *et al.* Phys. Rev. A. (1989), "Measurement of K x-rays from muonic helium formed in a low density target in an intense pulsed muon beam."

747 A. Etkin *et al.* Phys. Rev. Lett. *49*, 1620 (1982), "The reaction $\pi^- p \rightarrow \phi\phi n$ and evidence for glueballs."

Lindenbaum, S. J. Comments on "Glueballs, Multi-Quark States and the OZI Rule." Phys. Lett. *131B*, pp. 221-223 (1983).

Lindenbaum, S. J. The Discovery of Glueballs. *Surveys in High Energy Physics*. Vol. *4*, pp. 69-126, John M. Charap, Editor (Harvest Academic Publishers, London, 1983).

Lindenbaum, S. J. Production of Glueballs. Comments on Nuclear and Particle Physics *13*, No. 6, pp. 285-311 (1984).

Lindenbaum, S. J. and Lipkin, H. J. Comments on the Reaction $\pi^- p \rightarrow \phi\phi n$ and Glueballs. Phys. Lett. *149B*, p. 407 (1984).

A. Etkin *et al.* Phys. Lett. *B165*, 217 (1985), "Observation of three 2^{++} resonances in the glueball-enhanced channel $\pi^-\pi \rightarrow \phi\phi n$."

S. J. Lindenbaum and R. S. Longacre, Phys. Lett. *165B*, 202 (1985). "The glueball resonance and alternative explanations of the reaction $\pi^- p \rightarrow \phi\phi n$."

748 P. H. Hansen *et al.* Phys. Rev. Lett. *50*, 802 (1983), "Spin effects in pp elastic scattering at 28 GeV/c."

749 J. K. Black *et al.* Phys. Rev. Lett. *54*, 1628 (1985), "Measurements of the CP-non-conservation parameters ϵ'/ϵ'."

754 P. Kammel *et al.* Phys. Lett. *112B*, 319 (1982), "First observation of hyperfine transitions in muonic deuterium atoms via resonant DμD formation at 34-K.

W. H. Bertl *et al.* Kerntechnik *43*, 184 (1983), "Hyperfine transition of μd atoms in liquid hydrogen-deuterium mixture."

755 G. C. Blazey *et al.* Phys. Rev. Lett. *55*, 1820 (1985), "Hard scattering with exclusive reactions: $\pi^- p$ and meson production."

S. Heppelmann *et al.* Phys. Rev. Lett. *55*, 1824 (1985), "Decay distribution of high-transverse-momentum ρ mesons.

766 M. Church *et al.* "Exclusive Cascade Minus Production in 15-28 GeV Neutron-Proton Interactions," invited paper presented at the 23rd International Conference on High Energy Physics, Berkeley, CA, July 1986.

G. Tzanakos, "Search for neutrino oscillations," Proceedings of BNL Neutrino Workshop, M. Murtagh, editor (1987).

E. P. Hartouni *et al.* "Some Preliminary Results from BNL E766 on pp $\rightarrow$ pp K_s^0 $K\pi$. Contribution to the BNL Workshop on Glueballs, Hybrids and Exotic Hadrons, August 29-September 1, 1988.

E. P. Hartouni *et al.* IEEE Transactions on Nuclear Science, *36*, No. 5, October 1989, "A New Technique for On-Line and Off-line High Speed Computation."

E. P. Hartouni *et al.* "A New Technique for On-Line and Off-Line High Speed Computation," IEEE Transactions on Nuclear Science *36*, 1480 (1989).

L. Wiencke *et al.* "Photon Production in Fully Reconstructed PP Collisions at 27.5 GeV/c. Presented at the Pittsburgh Workshop on Soft Lepton Pair and Photon Production, September 6-8, 1990.

L. R. Wiencke *et al.* "Observation of the Coulomb Effects in Production of $\pi^+\pi^-$, $p\pi^-$, and K^+K^- Pairs in pp Collisions at 27.5 GeV/c. Submitted to Phys. Rev. Lett., March 6, 1992.

767 T. Armstrong *et al.* Phys. Lett. *B175*, 383 (1986), "A search for narrow states in anti-neutron proton total and annihilation cross-sections near anti-N N threshold."

769 R. S. Longacre *et al.* Phys. Lett. *177B*, 223 (1986), "A measurement of π-p $\rightarrow$ KO-S KO-Sn at 22 GeV/c and a systematic study of the 2^{++} meson spectrum."

771 A. S. Boehnlein "Study of the $K+\bar{K}^0\pi^-$ System Produced in the Reaction $\bar{p}$ p $\rightarrow$ K^+K^{-0}-π + X at 8 GeV/c," Florida State University FSU-HEP-900601.

S. U. Chung *et al.* Phys. Rev. Lett. *55*, 779 (1985), "Spin and parity analysis of KKπ system in the D and E/ι regions."

D. R. Reeves *et al.* Phys. Rev. *D34*, 1960 (1986), "Spin-parity analysis of pp $\rightarrow$ E(1420)X."

A. Birman *et al.* Phys. Rev. Lett. *61*, 1557 (1988), "Partial-wave analysis of the $K^+\bar{K}^0\pi^-$ system."

773 H. Piekarz, Nucl. Phys. *A450*, 85c, (1986), "Searches for dibaryons of strangeness -1." NP A463 (1987) 205c.

Shlomit Tarem, Physics Department, Brandeis University, 1987. PHD Thesis.

774 R. E. Chrien, E. V. Hungerford, and T. Kishimoto, "Continuum Effects and the Interpretation of Σ- Hypernuclei." Phys. Rev. *C35*, 1589 (1987).

777 N. J. Baker *et al.*, Phys. Rev. Lett. *59*, 2832 (1987), "Search for Short-Lived Neutral Particles Emitted in K^+ Decay."

C. Campagnari *et al.*, Phys. Rev. Lett. *61*, 2062 (1988), "Search for the Decay $K^+ \rightarrow \pi^+\mu^+e^-$."

D. M. Lazarus *et al.*, AIP Conference Proceedings 176, 3rd International Conference on the Intersections Between Particle and Nuclear Physics, G. Bunce, editor (1988).

A. M. Lee *et al.*, Phys. Rev. Lett. *64*, 165 (1990), "Improved Limit on the Branching Ratio of $K^+ \rightarrow \pi^+\mu^+e^-$.

C. Alliegro *et al.*, Rare K^+ Decays in Flight: Latest Results and Future Plans, Particles and Fields 1991, The Vancouver Meeting, 587 (1991).

778 B. C. Stringfellow *et al.* NIM *A251*, 242 (1986), "Accelerator internal target experiments using a supersonic gas jet."

779 Y. Y. Chu and M. C. Zhou, Phys. Rev. *C28*, 1379 (1983), "Identification of ^{233}Ac."

780 H. B. Greenlee, H. Kasha, E. B. Mannelli, M. Mannelli, S. F. Schaffner, M. P. Schmidt, C. B. Schwarz, E. Jastrzembski, R. C. Larsen, L. B. Leipuner, W. M. Morse, R. K. Adair, "A Search for $K^o_L \rightarrow \mu+e$ and $K^o_L \rightarrow e^+e^-$." BNL 40452.

E. Jastrzembski *et al.*, Phys. Rev. Lett. D61, 2300 (1988).

S. F. Schaffner *et al.*, Phys. Rev. D39, 990 (1989).

782 K. A. Brown *et al.* Phys. Rev. *D31*, 3017 (1985), "Measurement of $p+p \rightarrow p+p$ with a 16.5 GeV/c polarized proton beam."

G. R. Court *et al.* Phys. Rev. Lett. *57*, 507 (1986). "Energy dependence of spin effects in $p\uparrow \rightarrow p\uparrow \rightarrow p + p$."

D. G. Crabb *et al.* Phys. Rev. Lett. *60*, 2351 (1988) "Measurement of Spin Effects in $p + p \rightarrow p + p$ at 18.5 GeV/c."

785 Y. I. Makdisi, "Experimental results on spin physics at the AGS," 7th Int. Symp. on High Energy Spin Physics, Protvino, Russia, September 22, 1986.

787 Central drift chamber for rare kaon decay spectrometer. Ahmad, S., Blackmore, E. W., Bryman, D. A., Cresswell, J., Numao, T. IEEE Trans. Nucl. Sci. NS-33, (1986) 178.

Status of a Study of the Decay $K^+ \rightarrow \pi^+\nu\bar{\nu}$. R. C. Strand. Third Conference on the Intersections Between Particle and Nuclear Physics, Maine, Ed. Gerry M. Bunce, pp. 866-73 (1988).

A Study of $K^+ \rightarrow \pi^+\nu\bar{\nu}$. M.S. Atiya, I-H. Chiang, J. S. Frank, J. S. Haggerty, M. Ito, T. F. Kycia, K. K. Li, L. S. Littenberg, A. J. Stevens, R. C. Strand, W. C. Louis, D. S. Akerib, D. R. Marlow, P. D. Meyers, M. A. Selen, F. C. Shoemaker, A. J. S. Smith, G. Azuelos, E. W. Blackmore, D. A. Bryman, L. Felawka, P. Kitching, Y. Kuno, J. Macdonald, T. Numao, P. Padley, J-M. Poutissou, R. Poutissou, and J. Roy. IX European Symposium on Anti-proton-Proton Interactions and Fundamental Symmetries, Mainz, Germany, Sept. 5-10, 1988.

A cylindrical drift chamber for the measurement of $K \rightarrow \pi \nu \bar{\nu}$ decay. Cresswell, J. V., Ahmad, S., Blackmore, E. W. Bryman, D. A., Khan, N., Kuno, Y., Numao, T. IEEE Trans. Nucl. Sci, 35 (1988) 460-463.

Search for $K^+ \rightarrow \pi^+ \nu \bar{\nu}$. M. S. Atiya, I-H. Chiang, J. S. Frank, J. S. Haggerty, M. Ito, T. F. Kycia, K. K. Li, L. S. Littenberg, A. J. Stevens, R. C. Strand, W. Louis, D. S. Akerib, D. R. Marlow, P. D. Meyers, M. A. Selen, F. C. Shoemaker, A. J. S. Smith, G. Azuelos, E. W. Blackmore, D. A. Bryman, L. Felawka, P. Kitching, Y. Kuno, J. Macdonald, T. Numao, P. Padley, J-M. Poutissou, J. Roy, and R. Poutissou. Proc., "Rare Decay Symposium," Vancouver, B. C., Nov. 1988, D. Bryman, J. Ng, T. Numao, and J-M. Poutissou, Editors, World Scientific, Singapore, pp. 61-80, 1989.

Search for the Rare Decay $K^+ \rightarrow \pi^+ \nu \bar{\nu}$. M. S. Atiya, I-H. Chiang, J. S. Frank, J. S. Haggerty, M. M. Ito, T. F. Kycia, K. K. Li, L. S. Littenberg, A. K. Sambamurti, A. J. Stevens, R. C. Strand, W. C. Louis, D. S. Akerib, D. R. Marlow, P. D. Meyers, M. A. Selen, F. C. Shoemaker, A. J. S. Smith, G. Azuelos, E. W. Blackmore, D. A. Bryman, L. Felawka, P. Kitching, A. Konaka, Y. Kuno, J. A. Macdonald, T. Numao, B. P. Padley, J-M. Poutissou, R. Poutissou, J. Roy, and A. S. Turcot. Proceedings, "Fourth Family of Quarks and Leptons: Second Intern. Symposium," Santa Monica, CA, Feb. 1989, Annals of the Academy of Sciences *578*, 202-14 (1989).

A Search for a Light Higgs Boson in the Decay $K^+ \rightarrow \pi^+ H$, $H \rightarrow \mu^+ \mu^-$. M. S. Atiya, I-H. Chiang, J. S. Frank, J. S. Haggerty, M. M. Ito, T. F. Kycia, K. K. Li, L. S. Littenberg, A. K. Sambamurti, A. J. Stevens, R. C. Strand, W. C. Louis, D. S. Akerib, D. R. Marlow, P. D. Meyers, M. A. Selen, F. C. Shoemaker, A. J. S. Smith, G. Azuelos, E. W. Blackmore, D. A. Bryman, L. Felawka, P. Kitching, Y. Kuno, J. A. Macdonald, T. Numao, B. P. Padley, J-M. Poutissou, R. Poutissou, and J. Roy. Phys. Rev. Lett. **63**, 2177-80 (1989).

Brookhaven Experiment 787, "The Search for $K^+ \rightarrow \pi^+ \nu \bar{\nu}$. P. D. Meyers, Proc., "24th Rencontres de Moriond Session on Electroweak Interactions and Unified Theories," Les Arcs, France, March 5-12, 1989.

Hunting for the rare decay $K^+ \rightarrow \pi^+ \mu^+ \mu^-$. Selen, M. A. Princeton University DOE/ER-3072-49. January 1989.

Waveform Digitizing at 500 MHz. Atiya, M., et al. IEEE Trans. on Nucl. Sci. 36, 813-7 (1989).

Search for the Decay $K^+ \rightarrow \pi^+ \nu \nu^-$. M. S. Atiya, I-H. Chiang, J. S. Frank, J. S. Haggerty, M. M. Ito, T. F. Kycia, K. K. Li, L. S. Littenberg, A. Stevens, R. C. Strand, W. C. Louis, D. S. Akerib, D. R. Marlow, P. D. Meyers, M. A. Selen, F. C. Shoemaker, A. J. S. Smith, G. Azuelos, E. W. Blackmore, D. A. Bryman, L. Felawka, P. Kitching, Y. Kuno, J. A. Macdonald, T. Numao, P. Padley, J-M. Poutissou, R. Poutissou, and J. Roy. Phys. Rev. Lett. **64**, 21-4 (1990).

Search for the Decay $K^+ \rightarrow \pi^+\gamma\gamma$. M. S. Atiya, I-H. Chiang, J. S. Frank, J. S. Haggerty, M. M. Ito, T. F. Kycia, K. K. Li, L. S. Littenberg, A. J. Stevens, R. C. Strand, W. C. Louis, D. S. Akerib, D. R. Marlow, P. D. Meyers, M. A. Selen, F. C. Shoemaker, A. J. S. Smith, G. Azuelos, E. W. Blackmore, D. A. Bryman, L. Felawka, P. Kitching, Y. Kuno, J. A. Macdonald, T. Numao, P. Padley, J-M. Poutissou, R. Poutissou, J. Roy. Phys. Rev. Lett. **65**, 1188-91 (1990).

Search for the Flavor-Changing Neutral Current Decay $K^+ \rightarrow \pi^+\nu\nu$. M. S. Atiya, I-H. Chiang, J. S. Frank, J. S. Haggerty, T. F. Kycia, K. K. Li, L. S. Littenberg, A. Sambamurti, A. J. Stevens, R. C. Strand, W. C. Louis, D. S. Akerib, M. M. Ito, D. R. Marlow, P. D. Meyers, M. A. Selen, F. C. Shoemaker, A. J. S. Smith, G. Azuelos, E. W. Blackmore, D. A. Bryman, L. Felawka, P. Kitching, A. Konaka, Y. Kuno, J. A. Macdonald, T. Numao, P. Padley, J.-M. Poutissou, R. Poutissou, J. Roy, R. A. Soluk, and A. S. Turcot. Proc. 15th APS Division of Particles and Fields General Meeting, Houston, Texas, Jan. 3-6, 1990 (in press).

Search for the decay $K^+ \rightarrow \pi^+\nu\bar{\nu}$ Atiya, M. S., et al. Tokyo Accel. Symposium 1990, 19-30 (QCD161: I15:1990); Phys. Rev. Lett. 64, 21-2 (1990).

Upper Limit on the Decay $\pi^o \rightarrow \nu\bar{\nu}$. M. S. Atiya, I-H. Chiang, J. S. Frank, J. S. Haggerty, M. M. Ito, T. F. Kycia, K. K. Li, L. S. Littenberg, A. Stevens, R. C. Strand, W. C. Louis, D. S. Akerib, D. R. Marlow, P. D. Meyers, M. A. Selen, F. C. Shoemaker, A. J. S. Smith, G. Azuelos, E. W. Blackmore, D. A. Bryman, L. Felawka, P. Kitching, Y. Kuno, J. A. Macdonald, T. Numao, P. Padley, J-M. Poutissou, R. Poutissou, and J. Roy. Phys. Rev. Lett. 66, 2189-92 (1991).

A Search for the Rare Decay $K^+ \rightarrow \pi^+ \nu\bar{\nu}$. Daniel S. Akerib. Princeton University DOE/ER-3072-64. January 1991.

500-MHz transient digitizers based on GaAs CCDs. Bryman, D., et al. IEEE Trans. Nucl. Sci. NS-38; 295-300 (1991).

Recent results on rare K^+ decays from BNL E787. Numao, T., et al. In Tucson 1991 Proceedings, Intersections between particle and nuclear physics, 615-620 and Vancouver TRIUMF - TRI-PP-91-051 (91/06, rec. Sept. 5).

A detector to search for $K^+ \rightarrow \pi^+\nu\bar{\nu}$. Atiya, M. S., et al. Nucl. Instr. & Methods, A321, 129-151 (1992).

Search for the decay $\pi^0 \rightarrow \gamma + X$. Atiya, M. S., et al. Phys. Rev. Lett. 69, 733-736, (1992).

Search for the decays $K^+ \rightarrow \pi^+\nu\bar{\nu}$ and $K+ \rightarrow \pi^+X^0$ for $150 < M_x^0 < 250$ MeV/c^2. Atiya, M. S. et al. Phys. Rev. D48, 1 (1993).

An improved search for the decay $K^+ \rightarrow \pi^+\nu\bar{\nu}$. Atiya et al. Phys. Rev. Lett. 70, 2521 (1993).

788 J. J. Szymanski, "Weak Decay of Λ 0 Hypernuclei." Proceedings of the Second Conference on the Intersections between Particle and Nuclear Physics, Lake Louise, Alberta, Canada, May 24, 1986.

J. J. Szymanski *et al.*, Phys. Rev. C43, 849 (1991).

789 J. Sculli *et al.* Phys. Rev. Lett. *58*, 1715, (1987), "Limits on $\xi 2(2.2)$ formation in $p\bar{p} \rightarrow K^+K^-$."

790 L. P. Remsberg *et al.*, 7th High Energy Heavy Ion Study, "Stopping power measurements with 17 GeV/c protons at the AGS or inclusive proton spectra from proton-nucleus interactions at 17 GeV/c," R. Bopck, H. H. Gutbrod, R. Stock (eds.), Gesellschaft für Schwerionenforschung mbH., Darmstadt, FRG, March 1985, pp. 439-450.

791 R. D. Cousins, *et al.*, "Search for the decays $K^o_L \rightarrow \mu e$ and $K^o_L \rightarrow e^+e^-$, "Phys. Rev. **D38** (Rapid Communications) 2914-2917 (1988).

C. Mathiazhagan, W. R. Molzon, R. D. Cousins, J. Konigsberg, J. Kubic, P. Melese, P. Rubin, W. E. Slater, D. Wagner, G. W. Hart, W. W. Kinnison, D. M. Lee, R. J. McKee, E. C. Milner, G. H. Sanders, H. J. Ziock, K. Arisaka, P. Knibbe, J. Urheim, S. Axelrod, K. A. Biery, G. M. Irwin, K. Lang, J. Margulies, D. A. Ouimette, J. L. Ritchie, Q. H. Trang, S. G. Wojcici, L. B. Auerbach, P. Buchholz, V. L. Highland, W. K. McFarlane, M. Sivertz, M. D. Chapman, M. Eckhause, J. F. Ginkel, A. D. Hancock, D. Joyce, J. R. Kane, C. J. Kenney, W. F. Vulcan, R. E. Welsch, R. J. Whyley, R. G. Winter (UC-Irvine/UC-LA/LANL/Pennsylvania/Stanford/Temple/ William and Mary), "New Experimental Limits on $K_L \rightarrow \mu e$ and $K_L \rightarrow ee$ Branching Ratios." Submitted to Phys. Rev. Lett. 8/3/89.

C. Mathiazhagan, *et al.*, "New Experimental Limits on $K^0_L \rightarrow \mu e$ and $K^0_L \rightarrow e^+e^-$ Branching Ratios," Phys. Rev. Lett. **63** 2128-2184 (1989).

C. Mathiazhagen, *et al.*, "Measurement of the Branching Ratio for the Decay $K^0_L \rightarrow \mu^+\mu^-$," Phys. Rev. Lett. **63** 2185-2188 (1989).

A. Heinson, *et al.*, "Higher Statistic Measurement of the Branching Ratio for the Decay $K^0_L \rightarrow \mu^+\mu^-$," Phys. Rev. D (Rapid Communications), D44, 1-5 (1991).

K. Arisaka, et al., "Improved Upper Limit on the Branching Ratio $B(K^0_L \rightarrow \mu^\pm e^\mp)$," Phys. Rev. Lett. **70**, 1044 (1993).

A. P. Heinson *et al.*, "Measurement of the Branching Ratio for the Rare Decay $K^0_L \rightarrow \mu^+\mu^-$." Submitted to Phys. Rev. D. Princeton/HEP/94-15, 29 August 1994.

793 Y. D. He, P. B. Price and W. T. Williams, "Interactions of projectile fragments at 14.5 A GeV. Search for anomalons," Phys. Letts. B, **252**, 331-335 (1990).

P. B. Price and Y. D. He, "Behavior of nuclear projectile fragments produced in collisions of 14.5 A GeV ^{28}Si with Pb and Cu targets," Phys. Rev. C, **43**, 835-848 (1991).

794 D. C. Peaslee *et al.*, Phys. Rev. Lett. *51*, 2359 (1983), "Large $P^2_\perp$ spin effects in pp → pp."

P. R. Cameron *et al.*, Phys. Rev. *D32*, 3070 (1985), "Measurement of the analyzing power for pp → pp at $P^2_\perp = 6.5$ (GeV/c)^2.

D. G. Crabb *et al.*, "High Precision Measurement of the Analyzing Power in Large-$P^2_\perp$ Spin-Polarized 24 GeV/c Proton-Proton Elastic Scattering," Phys. Rev. Lett. 65, 3241 (1990).

D. G. Crabb *et al.* Phys. Rev. Lett. 64, 2627 (1990), "Observation of a 96% Proton Polarization in Irradiated Ammonia."

J. A. Stewart *et al.* "High Precision Measurement of the Spin Analyzing Power in Large-$P^2_\perp$ Proton-Proton Elastic Scattering at 24 GeV/c" (to be submitted to Phys. Rev. D.).

795 B. Bassalleck, "NN bound states," Proceedings of 1986 INS International Symposium on Hypernuclear Physics, Tokyo, p. 385.

796 Y. J. Uemura *et al.*, "Muon Spin Relation in $CeCu^2Si^2$ and muon Knight shift in various heavy-fermion systems," 4th Int. Conf. on Muon Spin Rotation, Relaxation and Resonance, Uppsala, Sweden, June 1, 1986.

W. J. Kossler *et al.* "Magnetic field penetration depth of $La_{1.85}Sr_{0.15}CuO_4$ measured by muon spin relaxation," Phys. Rev. B, *35*, 7133 (1987).

W. J. Kossler *et al.* "Muon Spin Relaxation on High-T_c Superconductors," Novel Superconductivity, 757, Stuart A. Wolf and Vladimir Z. Kresin, Editors (Plenum Publishing Corp., 1987).

Y. J. Uemura *et al.* "Antiferromagnetism of La_2CuO_{4-y} Studied by Muon-Spin Rotation," Phys. Rev. Lett. *59*, 1045 (1987).

Y. J. Uemura *et al.* "Systematic variation of magnetic-field penetration depth in high-T_c superconductors studied by muon-spin relaxation," Phys. Rev. B, *38* (1988).

J. H. Brewer *et al.* "Antiferromagnetism and Superconductivity in Oxygen-Deficient $YBa_2Cu_3O_x$," Phys. Rev. Lett., *60*, 1073 (1988).

Y. J. Uemura *et al.* "Comparison between Muon Spin Rotation and Neutron Scattering Studies on the 3-Dimensional Magnetic Ordering of La_2CuO_{4-y}," Physica C, 769-70 (1988).

Y. J. Uemura *et al.* "Universal Correlations between T_c and n_s/m^* (Carrier Density over Effective Mass) in High-T_c Cuprate Superconductors," Phys. Rev. Lett. *62*, 2317 (1989).

W. J. Kossler *et al.* "Coexisting static magnetic order and superconductivity in $CeCu_{2.1}Si_2$ found by muon spin relaxation," Phys. Rev. B., *39*, 4726 (1989).

798 H. S. Plendl, "Excitation of Hypernuclear States Through the (π^+,K^+) Reaction," Proc. of the 4th International Conference on Nuclear Reaction Mechanisms, Varenna, June 10-15, 1985. Ed. E. Gadioli.

R. E. Chrien, Nucl. Phys. A478 (1988) 705c.

P. H. Pile, J. Phys. Soc. Japan. 58 (1989) Suppl. p. 394.

P. H. Pile, "A Study of Heavy Hypernuclei Using the (π^+,K^+) Reaction," IL Nuovo Cimento, Vol. 102, No. 2, p. 413 (1989).

P. H. Pile *et al.*, "Study of Hypernuclei by Associated Production," Phys. Rev. Letts. **66**, 2585-1258 (1991).

801 G. L. Shaw *et al.* Search for Free Quarks Produced by 14.5 GeV/A Heavy Ions," submitted to Phys. Rev. Letts. 1987.

Gordon L. Shaw *et al.* "Search for free quarks produced by 14.5 GeV/nucleon oxygen ions," Phys. Rev. D, *36*, 3533 1987.

802 T. Abbott *et al.*, "Measurement of energy emission from O+A and p+A collisions at 14.5 GeV/c per nucleon with a lead-glass array," Phys. Lett. *197*, 285-90 (1987).

T. Abbott *et al.* First encounter with a 14.5 GeV/A ^{16}O beam. Proc. XI International Conference on Particle and Nuclei (PANIC '87), Kyoto, Japan, April 20-24, 1987 (Abstract Book Part II), edited by S. Homma *et al.*, pp. 448-9 (1987).

D. E. Alburger *et al.* "CsI(Ti)-^{241}Am calibration source for Pb-glass detectors," Nucl. Instr. and Meth. *A254*, 88 (1987).

D. E. Alburger, "Removal of phototubes from Pb-glass detectors," Rev. Sci. Instrum. *58*, 143 (1987).

D. E. Alburger and M. J. Tannenbaum, "Removal of phototubes from Pb-glass detectors II," Rev. Sci. Instrum. *58*, 1761 (1987).

M. J. LeVine, W. A. Watson III, H. von der Schmitt, and S. Kaufman, "Distributed data acquisition for BNL 802 I: the front end," Fifth Conf. on Real-Time Computer Applications in Nuclear, Particle and Plasma physics, San Francisco, CA, May 11-15, 1987, IEEE Trans. Nucl. Sci. *NS-34*, 830 (1987).

R. A. Scheetz and M. J. LeVine, "An intelligent VME-based camac crate controller," Fifth Conf. on Real-Time Computer Applications in Nuclear, Particle, and Plasma Physics, San Francisco, CA, May 11-15, 1987, IEEE Trans. Nucl. Sci. *NS-34*, 1033 (1987).

R. A. Scheetz and M. J. LeVine, "A VME-VMX interface to fastbus via the LeCroy 1821 segment manager," Fifth Conf. on Real-Time Computer Applications in Nuclear, Particle, and Plasma Physics, San Francisco, CA, May 11-15, 1987, IEEE Trans. Nucl. Sci. *NS-34*, 1036 (1987).

B. Wadsworth *et al.* "The trigger supervisor: managing triggering conditions in a high energy physics experiment," Fifth Conf. on Real-Time Computer Applications in Nuclear, Particle, and Plasma Physics, San Francisco, CA, May 11-15, 1987, IEEE Trans. Nucl. Sci. *NS-34*, 980 (1987).

T. Abbott *et al.*, Measurement of energy and charged particle emission in the central rapidity region from O+A and p+A collisions at 14.5 GeV/c per nucleon and preliminary results from Si+A collisions. Proc. 6th Intern. Conf. on Ultra-Relativistic Nucleus-Nucleus Collisions, August 24-28, 1987, Schloss-Nordkirchen, Germany. Z. Phys. C 38, 35-43 (1988).

T. Abbott *et al.*, "Preliminary spectrometer results from E802," Proc. 6th Int. Conf. on Ultra-Relativistic Nucleus-Nucleus Collisions (Quark Matter 1987), Z. Phys. C *38*, 135-9 (1988).

T. Abbott *et al.*, "Measurement of energy and charged particle emission in the central rapidity region from O+A and p+A collisions at 14.5 GeV/c per nucleon and preliminary results from Si+A collisions," Proc. 6th Int. Conf., on Ultra-Relativistic Nucleus-Nucleus Collisions (Quark Matter 1988), Z. Phys. C (To be published.)

T. Abbott *et al.*, "Proton production from Si + Au collisions at 14.5 A • GeV," Proc. 7th Int. Conf. on Ultra-Relativistic Nucleus-Nucleus Collisions (Quark Matter 1988), Z. Phys. C (in press).

T. Abbott *et al.*, "Results from the BNL E802 spectrometer for 14.5 GeV/c per nucleon Si beams," Proc. 7th Int. Conf. on Ultra-Relativistic Nucleus-Nucleus Collisions (Quark Matter 1988) Z. Phys. C (in press).

T. Abbott *et al.*, "Particle spectra near mid-rapidity studied with a Cherenkov-complex system in 14.5 A GeV Si + Au collisions," Proc. 7th Int. Conf. on Ultra-Relativistic Nucleus-Nucleus Collisions (Quark Matter 1988), Z. Phys. C (in press).

T. Abbott *et al.*, Preliminary results from Brookhaven experiment 802 with 14.5 GeV/u ^{28}Si. Proc. IX Autumn School on the Physics of Quark-Gluon Plasma, December 9-12, 1987, Lisbon, Portugal. J. Dias de Deus and S. Costa Ramos, editors, World Scientific Publishing Co., Pte. Ltd., New Jersey, pp. 3-14 (1988).

T. Abbott *et al.* Preliminary spectrometer results from E802. Proc. 6th Intern. Conf. on Ultra-Relativistic Nucleus-Nucleus Collisions, Aug. 24-28, 1987, Schloss-Nordkirchen, Germany. Z. Phys. C 38, 135-9 (1988).

T. Abbott *et al.* Projectile energy degradation at 14.5 GeV/u. Proc. Third Int. Conf. on Nucleus-Nucleus Collisions, June 6-11, 1988, Saint-Malo, France (in press).

T. Abbott *et al.* Spectrometer results from BNL E802. Proc. 3rd Conf. on the Intersections Between Particle and Nuclear Physics, May 14-19, 1988, Rockport, ME. G. M. Bunce, Editor, AIP Conference Proceedings 176, 1988, pp. 1060-7.

M. J. Tannenbaum *et al.* Measurement of energy flow from oxygen, silicon and proton interactions with nuclei at the BNL Tandem-AGS. Proc. XXIII Recontre Moriond, Current Issues in Hadron Physics, Les Arcs, Savoie, France, March 1988 (in press.).

P. Vincent *et al.* "The E802 aerogel Cerenkov detector," Nucl. Inst. and Meth. *A272*, 660 (1988).

T. Abbott *et al.* Proton production form Si+Au collisions at 14.5 A GeV. Proc. 7th Intern. Conf. on Ultra-Relativistic Nucleus-Nucleus Collisions, September 26-30, 1988, Lenox, MA. Nucl. Phys. A498, 409c-13c (1989).

T. Abbott *et al.* Particle spectra near mid-rapidity studies with a Cerenkov- complex system in 14.5 A GeV Si + Au collisions. Proc. 7th Intern. Conf. on Ultra-Relativistic Nucleus-Nucleus Collisions, September 26-30, 1988, Lenox, MA. Nucl. Phys. A498, 415c-9c (1989).

T. Abbott *et al.* Results from the BNL E802 spectrometer for 14.5 GeV/c per nucleon Si beams. Proc. 7th Intern. Conf. on Ultra-Relativistic Nucleus-Nucleus Collisions, September 26-30, 1988, Lenox, MA. Nucl. Phys. A498, 67c-78c (1989).

T. Abbott *et al.* Results for strange production from BNL E802. Proc. Hadronic Matter in Collision, October 6-12, 1988, Tucson, AZ. P. Carruthers and J. Rafelski, Editors, World Scientific, pp. 607-16 (1989).

T. Abbott *et al.* BNL high energy heavy ion experiments. Proc. 5th French-Japanese Symp. on Nuclear Physics, Sept. 26-30, 1989, Dogashima, Japan, pp. 33-41 (1989).

T. Abbott *et al.*, "Survey of results from Brookhaven experiment 802 at the AGS," Proc. Symp. on Nuclear Dynamics and Nuclear Disassembly, American Chemical Society, April 10-14, 1989, Dallas, TX. J. B. Natowitz, Ed., World Scientific, pp. 507-16 (1989).

D. Alburger *et al.* "Response of a thin avalanche detector to simultaneous minimum ionizing particles," Nucl. Instr. and Meth. *A276*, 127 (1989).

D. Beavis, R.R. Betts, M. A. Bloomer, Y. Y. Chu, J. B. Cumming, E. Duek, P. E. Haustein, I. Juricic, S. Katcoff, and S. B. Kaufman. A calorimeter for relativistic heavy-ion experiments. Nucl. Instr. Meth. *A281*, 367-72 (1989).

J. B. Cumming *et al.* More on ZCAL's response: position dependence, position determination, and collimation effects. BNL Informal Report, BNL-43537 (1989). R. Debbe, J. Fischer, D. Lissauer, T. Ludlam, D. Makowiecki, V. Radeka, S. Rescia, G. C. Smith, D. Stephani, D. Yu. M.W.P.C. with highly segmented cathode pad readout. Proc. 1989 Wire Chamber Conference, February 13-17, 1989, Vienna, Austria. Nucl. Instr. Meth. A283, 772-7 (1989).

H. Wegner, *et al.* (E-802 Collaboration). p + A and comparison to ^{28}Si + A measurements with the E-802 relativistic heavy ion spectrometer. Proc. 1989 Int. Nuclear Physics Conference, August 20-26, 1989, Sao Paulo, Brazil (contributed paper).

T. Abbott *et al.* Kaon and pion production in central Si+Au collisions at 14.6 A GeV/c. Phys. Rev. Letts. **64**, 847-50 (1990).

T. Abbott *et al.* A single arm spectrometer detector system for high energy heavy ion experiments. Nucl. Instr. Meth. A **290**, 41-60 (1990).

R. Debbe, J. Fischer, D. Lissauer, T. Ludlam, D. Makowiecki, E. O'Brien, V. Radeka, S. Rescia, L. Rogers, G. C. Smith, D. Stephani, B. Yu, S. V. Greene, T. K. Hemmick, J. T. Mitchell and B. Shivakumar. A study of wire chambers with highly segmented cathode pad readout for high multiplicity, charged particle detection. IEEE Nuc. Sci. Symposium, Jan. 17-19, 1990, San Francisco, CA. IEEE Trans. Nucl. Sci. 37, 88-94 (1990)

O. Hansen. Strangeness production in Si+Au interactions at 14.6 GeV/c per nucleon. Proc. International Advanced Courses on the Nuclear Equation of State, May 21-June 3, 1989, Pensicola, Spain, "The Nuclear Equation of State, Part B, edited by W. Greiner and H. Stöcker, pp. 97-102, Plenum Press, New York (1990).

O. Hansen. Are hadron spectra thermal in 14.6 A·GeV/c nucleus-nucleus collisions? Proc. 6th Nordic Meeting on Nuclear Physics, August 10-15, 1989, Utgarden, Kopervik, Norway. Physica Scripta T32, 143-6 (1990).

Ole Hansen. Strangeness enhancement in 14.6 A·GeV/c Si+Au interactions? Proc. Int. Workshop XVIII Gross Properties of Nuclei and Nuclear Excitations, January 15-20, 1990. Hirschegg, Austria, pp. 63-70 (1990).

Ole Hansen, Editor. Proc. Workshop on Heavy Ion Physics at the AGS (HIPAGS), March 5-7, 1990, Brookhaven National Laboratory, Upton, NY. BNL-44911 (1990).

Y. Miake *et al.* (E-802 Collaboration). Spectra and strangeness production. Proc. of Workshop on Heavy Ion Physics at the AGS (HIPAGS), March 5-7, 1990, Brookhaven National Laboratory, Upton, NY. BNL-44911, pp. 240-8 (1990).

Y. Miake. Review of BNL heavy ion physics. Proc. Intern. Workshop on High Density Nuclear Matter, September 18-21, 1990, KEK, Ibaraki, Japan (in press).

M. J. Tannenbaum *et al.* (E-802 Collaboration). E_T distributions, "nuclear stopping," and correlations among measurements from the 4 detector systems in AGS E802. Proc. Workshop on Heavy Ion Physics at the AGS (HIPAGS), March 5-7, 1990, Brookhaven National Laboratory, Upton, NY BNL-44911, pp. 44-69 (1990).

F. Videbaek *et al.* (E-802 Collaboration). Charged particle distributions in heavy ion collisions at 14.6 GeV A/c. Proc. Workshop on Heavy Ion Physics at the AGS (HIPAGS), March 5-7, 1990, Brookhaven National Laboratory, Upton, NY. BNL-44911, pp. 38-43 (1990).

J. Costales *et al.* (E-802 Collaboration). E802: baryons and anti-baryons. Proc. Workshop on Heavy Ion Physics at the AGS (HIPAGS), March 5-7, 1990, Brookhaven National Laboratory, Upton, NY. BNL-44911, pp. 249-60 (1990).

R. J. Morse *et al.* (E-802 Collaboration). E802 HBT results. Proc. Workshop on Heavy Ion Physics at the AGS (HIPAGS), March 5-7, 1990, Brookhaven National Laboratory, Upton, NY. BNL-44911, pp. 402-10 (1990).

M. J. LeVine. New challengers for HEP computing: RHIC and CEBAF. Proc. Computing in High Energy Physics-1990, Santa Fe, NM. AIP Conference Proceedings 209, J. Lillberg and M. Oothoudt, Editors, pp. **31-43** (1990).

T. Abbott *et al.*, "Antiproton Production in 14.6 A GeV/c Si + A Collisions," submitted to Phys. Lett. **B271**, 447-52 (1991).

T. Abbott *et al.*, "Forward and Transverse Energies in Relativistic Heavy Ion Collisions at 14.6 GeV/c per Nucleon," Phys. Rev. C **44**, 1611-9 (1991).

T. Abbott *et al.*,"Comparison of p+A and Si+Au Collisions at 14.6 GeV/c." Phys. Rev. Letts. **66**, 1567-70 (1991).

M. A. Bloomer *et al* (E-802 Collaboration). Love, W. *et al* (E-810 Collaboration), and L. Waters (E-814 Collaboration). New results from AGS heavy-ion experiments. Nucl. Phys. A527, 595c-600C (1991).

J. B. Costales *et al.* (E-802 Collaboration). Antiproton production in 14.6 A·GeV/c Si + A collisions. Proc. Quark Matter 1990, May 7-11, 1990, Menton, France. Nucl. Phys. A525, 455c-8c (1991).

J. B. Costales *et al* (E-802 Collaboration). Target rapidity proton distributions for Si+A collisions at the AGS. Proc. Quark Matter 1991, November 11-15, 1991, Gatlinburg,TN (in press).

O. Hansen. On the Quark-Gluon Plasma and Strangeness Enhancement. *Comments Nucl. Part. Phys.*, Vol. 20, Nos. 1 & 2, pp. 1-14 (1991).

Ole Hansen. Nucleus-nucleus collisions at very high energies. Proc. Mikolajki Summer School on Nuclear Physics, August 25-September 5, 1990, Mikolajki, Poland in "Nuclear and Atomic Physics with the Accelerators of the Nineties," Editors, A. Sujkowski and G. Szeflinska, IOP Publishing, Ltd, pp. 1-18 (1991).

Y. Miake *et al.* (E-802 Collaboration). Particle production in Si + A and p + A collisions at 14.6 A·GeV/c. Proc. Quark Matter 1990, May 7-11, 1990, Menton, France. Nucl. Phys. A525, 231c-6c (1991).

R. J. Morse *et al.* (E-802 Collaboration). Bose-Einstein correlations in 14.6 A·GeV/c ^{28}Si + A collisions. Proc. Quark Matter 1990, May 7-11, 1990, Menton France. Nucl. Phys. A525, 531c-5c (1991).

B. Moskowitz *et al.* (E-802 Collaboration). A review of recent E802 results. Proc. Seventh Winter Workshop on Nuclear Dynamics, January 26-February 2, 1991, Key West, FL (in press).

M. J. Tannenbaum *et al.* (E-802 Collaboration). Transverse energy and multiplicity distributions of p+p and A+A interactions. Proc. Quark Matter 1990, May 7-100, 1990, Menton, France. Nucl. Phys. A525, 681c-4c (1991).

F. Videbaek *et al.* (E-802 Collaboration). Particle production and spectra in E-802 at BNL-AGS. Proc. Int. Symp. of High Energy Nuclear Collisions and Quark Gluon Plasma, June 6-8, 1991, Kyoto, Japan (in press).

W. A. Zajc *et al* (E-802 Collaboration). Recent results from E802 and E859. Proc. Quark Matter 1991, November 11-15, 1992, Gatlinburg, TN (in press).

T. Abbott *et al.*, Bose-Einstein Correlations in Si + Al and Si + Au Collisions at 14.6 A GeV/c. Phys. Rev. Letts. **69**, 1030-3 (1992).

T. Abbott *et al.* Measurement of Particle Production in Proton Induced Reactions at 14.6 GeV/c. Phys. Rev. D **45**, 3906-20 (1992).

T. Abbott *et al.* Centrality dependence of K^+ and π^+ multiplicities from Si+A collisions at 14.6 A·GeV/c. Phys. Lett. B **291**, 341-6 (1992).

T. Abbott *et al.* Global transverse energy distributions in relativistic nuclear collisions at 14.6 A·GeV/c. Phys. Rev. C **45**, 2933-51 (1992).

B. Moskowitz, O. Hansen, F. Videbaek. An "in acceptance" comparison of Si + Au data and RQMD predictions. Proc. Gross Properties of Nuclei and Nuclear Excitations International Workshop XX, January 20-25, 1992, Hirschegg, Kleinwalsertal, Austria (in press).

Y. Akiba *et al.* Bose-Einstein correlation of kaons in Si+Au collisions at 14.6 A·GeV/c. Phys. Rev. Lett. (accepted).

T. Abbott *et al.* Azimuthal asymmetries of particles emitted in relativistic heavy-ion collisions. Phys. Rev. Lett. (accepted).

T. Abbott *et al.* Antiproton production in p+A collisions at 14.6 GeV/c. Phys. Rev. C (accepted).

Ziping Chen, "Hadron Production in p+A Reactions at AGS Energies: A Review," Submitted to International Journal of Modern Physics E, January 1993.

T. Abbott *et al.* Charged Hadron Distributions in Central and Peripheral Si+A Collisions at 14.6A· GeV/c. Submitted to Phys. Rev. C., March 1994. Accepted May 1994.

T. Abbott *et al.*, Intermittency in Central Collisions of 16O+A at 14.6A GeV/c. Accepted July 13, 1994 Phys. Letts B..

L. Ahle *et al.* Global Transverse Energy Distributions in Si+Al, Au at 14.6A GeV/c and Au+Au at 11.6A GeV/c. Accepted May 20, 1994 - Phys. Lett. B.

805 S. De Panfilis *et al.* "First Results from the Galactic Axion Search," Proceedings of the Thirteenth Texas Symposium on Relativistic Astro-physics, M. Ulmer, etc., (World Scientific, 1987) p. 265.

S. DePanfilis, A. C. Melissinos, B. E. Moskowitz, J. T. Rogers, Y. K. Semertzidis, W. U. Wuensch, H. J. Halama, A. G. Prodell, W. B. Fowler, and F. A. Nezrick, "Limits on the Abundance and Coupling of Cosmic Axions at $4.5 < m_a < 5.0$ μeV," Phys. Rev. Letts. 59, 839 (1987).

S. De Panfilis *et al.*, "Limits on the Abundance and Coupling of Cosmic Axions." Neutrino Masses and Neutrino Astrophysics, Proceedings of the IV Telemark Conference, V. Barger, F. Halzen, M. Marshak, and K. Olive, ed. (World Scientific, 1987).

S. De Panfilis and J. Rogers, "L and S Band Low-Noise Cryogenic GaAsFET Amplifiers." IEEE Trans. Microwave Theory and Techniques (March 1988).

S. De Panfilis *et al.*, "An Update of Results from an Experiment to Search for Galactic Axions Proceedings of II Workshop on Low Temperature Devices for Detection of Low Energy Neutrinos and Dark Matter," L.A.P.P. (Annecy, France), May, 1988.

B. E. Moskowitz, "Cosmic Axion Searches." Proceedings of the Workshop on Non-Accelerator Particle Physics, A. C. Melissinos and B. E. Moskowitz, eds., NIM *A264*, 98 (1988).

B. E. Moskowitz and J. Rogers, "Analysis of a Microwave Cavity Detector Coupled to a Noisy Amplifier. Nuclear Instruments and Methods A264, 445 (1988).

B. E. Moskowitz *et al.*, "Improved Limits from the Galactic Axion Search," Proceedings of the II ESO/CERN Symposium on Astronomy, Cosmology, and Fundamental Physics, (Bologna, Italy) May, 1988, G. Giacomelli, ed.

J. T. Rogers *et al.*, Anomalous r.f Magneto Resistance in Copper at 4°K," Applied Physics Letters 52, 2266 (1988).

A. C. Melissinos *et al.*, "Search for Cosmic Axions," Eighth Workshop on Grand Unification, K. C. Wali, Ed., World Scientific, 1988.

W. Wuensch *et al.*, "Search for Cosmic Axions," Proceedings of XXIII Rencontre de Moriond on Dark Matter (Les Arcs, France) 1988. J. Tran Than Van, ed.

W. U. Wuensch *et al.*, "Results of a Laboratory Search for Cosmic Axions and Other Weakly Coupled Light Particles," Phys. Rev. **D40**, 3153 (1989).

J. T. Rogers *et al.*, "Experience with the Rochester-Brookhaven-Fermilab Axion Detector Proceedings of the Workshop on Cosmic Axions (BNL 1989), C. Jones and A. C. Melissinos, eds., World Scientific, p. 39 (1990).

806 C. Brechtmann, W. Heinrich, Nucl. Instr. Meth. B, 29 (1988).

A. Hoffmann, C. Brechtmann, W. Heinrich, E. V. Benton, "Search for Projectile Fragments with Fractional Charge in Relativistic Heavy Ion Collisions." Phys. Letts. B, Vol. 200, No. 4, 21 January 1988).

C. Brechtmann, W. Heinrich, and E. V. Benton, "Fragmentation Cross Sections of ^{28}Si at 14.5 GeV/Nucl," Phys. Rev. C *39*, (1989).

W. Heinrich, C. Brechtmann, "Electromagnetic Dissociation in Ultra-relativistic Heavy Ion Reactions," Mod. Phys. Lett. A *4*, 1879-1882 (1989).

808 L. M. Barbier, P. S. Freier, R. Holynski, W. V. Jones, A. Jurak, A. Olszewski, O. E. Pruet, C. J. Waddington, J. P. Wefel, B. Wilczynska, H. Wilczynski, W. Wolter and B. Wosiek, "Central collisions of 14.6, 60, and 200 GeV/nucleon ^{16}O nuclei in nuclear emulsion," Phys. Rev. Lett. Vol. 60, No. 5, 405 (1988).

L. M. Barbier, P. S. Freier, H. von Gersdorff, R. Holynski, A. Jurak, W. V. Jones, J. Kapusta, K. H. Moon, A. Olszewski, G. Park, O. E Pruet, M. Szarska, C. J. Waddington, J. P. Wefel, B. Wilczynska, H. Wilczynski, W. Wolter, B. Wosiek, and K. Wozniak, "Nucleus-Nucleus Interactions at 14.6, 60 and 200 GeV/nucleon," Nuclear Physics A498, 535c-540c (1989).

H. von Gersdorff, J. Amunsdon, P. S. Freier, J. Kapusta, C. J. Waddington, L. M. Barbier, W. V. Jones, K. H. Moon, I. G. Park, O. E. Pruet, J. P. Wefel, R. Holynski, A. Jurak, A. Olszewski, M. Szarska, B. Wilczynska, H. Wilczynski,, W. Wolter, B. Wosiek, and K. Wozniak, "Single-particle and multi-particle analysis of nucleus-nucleus collisions at 14.6, 60 and 200 GeV/nucleon," Phys. Rev. C, *39*, No. 4, 1385 (April 1989).

R. Holynski, A. Jurak, A. Olszewski, B. Wilczynska, H. Wilczynski, W. Wolter, B. Wosiek, L. M. Barbier, W. V. Jones, O. E. Pruet, "Evidence of Intermittent Patterns of Fluctuations in Particle Production in High Energy Interactions in Nuclear Emulsion," Phys. Rev. Lett., Vol. 62, 733 (1989).

R. Holynski, A. Jurak, A. Olszewski, M. Szarska, A. Trzupek, B. Wilczynska, H. Wilczynski, W. Wolter, B. Woriek, K. Wozniak, W. J. Jones, K. H. Moon, O. E. Pruet, J. P. Wefel, P. S. Freier, C. J. Waddington, "One- and two-dimensional analysis of the factorial moments in 200 GeV/nucleon p, ^{16}O and ^{32}S interactions with Ag and Br nuclei," Phys. Rev. C, Vol. 40, No. 6 (1989).

J. F. Amundson, "Intermittency and relativistic heavy-ion Monte Carlo simulators," Phys. Rev. C **41**, 1292 (1990).

C. J. Waddington, P. S. Freier, R. Holynski, W. V. Jones, A. Jurak, K. H. Moon, A. Olszweski, O. E. Pruet, M. Szarska, J. P. Wefel, B. Wilczynska, H. Wilczynski, W. Wolter, B. Wosiek and K. Wozniak, "Energy dependence of fragmentation of oxygen nuclei up to 200 GeV/nucleon," 21st International Cosmic Ray Conference, University of Adelaide, Australia, 8, 87 (1990).

810 S. J. Lindenbaum, K. J. Foley, S. E. Eiseman, A. Etkin, R. W. Hackenburg, R. S. Longacre, W. A. Love, T. W. Morris, E. D. Platner, A. C. Saulys, C. Chan, M. A. Kramer, T. J. Hallman, L. Madansky, B. E. Bonner, J. A. Buchanan, J. M. Clement, M. D. Corcoran, J. W. Kruk, H. E. Miettinen, G. S. Mutchler, F. Nessi-Tedaldi, M. Nessi, G. C. Phillips, J. B. Roberts. "Search for QGP Signals at AGS with a TPC Spectrometer, and Comparison of Our Event Generator Predictions for Plasma Model and Cascade Interactions." Proc. of the Third Conference on the Intersections Between Particle and Nuclear Physics, May 14-19, 1988, Rockport, Maine. AIP Conference Proceedings 176, pp. 778-786 (1988).

Kenneth J. Foley. The Use of TPC's as Target Region Detectors in the MPS. Proc. of the 1988 BNL Workshop on Glueballs, Hybrids and Exotic Hadrons, August 29-September 1, 1988, Brookhaven National Laboratory, AIP Conference Proceedings *185*, Suh-Urk Chung, Editor, p. 643-645.

W. A. Love (The E810 Collaboration). Some TPC Measurements in an Oxygen Beam at the AGS. Proc. of the VII International Conference on Ultra-Relativistic Nucleus-Nucleus Collisions (Quark Matter 88), Lenox, Massachusetts, Sept. 26-30, 1988. G. A. Baym, P. Braun-Munzinger, S. Nagamiya, Eds., Nucl. Phys. A498, 523c-528c (1989).

A. Etkin, S. E. Eiseman, K. J. Foley, R. W. Hackenburg, R. S. Longacre, W. A. Love, T. W. Morris, E. D. Platner, A. C. Saulys, S. J. Lindenbaum, C. S. Chan, M. A. Kramer, T. J. Hallman, L. Madansky, B. E. Bonner, J. A. Buchanan, J. M. Clement, M. D. Corcoran, J. W. Kruk, H. E. Miettinen, G. S. Mutchler, F. Nessi-Tedaldi, M. Nessi, G. C. Phillips, J. B. Roberts. A TPC for Large Solid Angle Relativistic Ion Experiments. (Proc. of the 1988 IEEE Nuclear Science Symposium, Orlando, Florida, November 9-11, 1988) IEEE Transactions on Nuclear Science *36*, pp. 58-62 (1989).

A. Etkin, S. E. Eiseman, K. J. Foley, R. W. Hackenburg, R. S. Longacre, W. A. Love, T. W. Morris, E. D. Platner, A. C. Saulys, S. J. Lindenbaum, C. S. Chan, M. A. Kramer, T. J. Hallman, L. Madansky, B. E. Bonner, J. A. Buchanan, C. N. Chiou, J. M. Clement, M. D. Corcoran, N. Krishna, J. W. Kruk, H. E. Miettinen, G. S. Mutchler, F. Nessi-Tedaldi, M. Nessi, G. C. Phillips, J. B. Roberts. Modular TPC's for Relativistic Heavy Ion Experiments, Proc. of the Wire Chamber Conference, Vienna, Austria, Feb.13-17, 1989, Nuclear Instruments and Methods in Physics Research A283, 557-566 (1989).

S. J. Lindenbaum. Search for a QGP with a TPC Spectrometer, and QGP Signals Predicted by New Event Generator. Proc. of the Hadronic Matter in Collision Conference, Tucson, Arizona, October 6-12, 1988, P. Carruthers and J. Rafelski, Editors, pp. 673-692 (World Scientific, 1989).

K. J. Foley, A. Etkin, R. W. Hackenburg, R. S. Longacre, W. A. Love, T. W. Morris, E. D. Platner, A. C. Saulys, S. J. Lindenbaum, C. S. Chan, M. A. Kramer, P. Hallman, L. Madansky, B. E. Bonner, J. A. Buchanan, C. N. Chiou, J. M. Clement, M. D. Corcoran, N. Krishna, J. W. Kruk, H. E. Miettinen, G. S. Mutchler, F. Nessi-Tedaldi, M. Nessi, G. C. Phillips, J. B. Roberts. Studies of Multiparticle Production in Heavy Ion Collisions Using a Time Projection Chamber. Proc. of the Europhysics Conference on High Energy Physics, 6-13 Sept. 1989, Madrid, Spain. Nucl. B (Proc. Suppl.) 16, 405-406 (1990).

Alfred C. Saulys (for the E810 Collaboration: B. E. Bonner, J. A. Buchanan, C. S. Chan, C. N. Chiou, J. M. Clement, M. D. Corcoran, A. Etkin, K. J. Foley, R. W. Hackenburg, T. J. Hallman, M. A. Kramer, J. W. Kruk, S. J. Lindenbaum, R. S. Longacre, W. A. Love, L. Madansky, H. E. Miettinen, T. W. Morris, G. S. Mutchler, M. Nessi, F. Nessi-Tedaldi, E. D. Platner, J. B. Roberts and A. C. Saulys). V^0 Production with 14.5 GeV/c Silicon Beams. Proc. of the Workshop on Heavy Ion Physics at the AGS, Brookhaven National Laboratory, March 5-7, 1990, Editor: Ole Hansen, pp. 209-226 (BNL, 1990).

William A. Love (for the E810 Collaboration: B. E. Bonner, J. A. Buchanan, C. S. Chan, C. N. Chiou, J. M. Clement, M. D. Corcoran, A. Etkin, K. J. Foley, R. W. Hackenburg, T. J. Hallman, M. A. Kramer, J. W. Kruk, S. J. Lindenbaum, R. S. Longacre, W. A. Love, L. Madansky, H. E. Miettinen, T. W. Morris, G. S. Mutchler, M. Nessi, F. Nessi-Tedaldi, E. D. Platner, J. B. Roberts, and A. C. Saulys). AGS

Silicon Gold Collisions Measured in the E810 TPC. Proc. of the Workshop on Heavy Ion Physics at AGS, Brookhaven National Laboratory, March 5-7, 1990, Ole Hansen, Editor, pp. 27-37 (BNL, 1990).

E. D. Platner (for the E810 Collaboration: A. Etkin, K. J. Foley, R. W. Hackenburg, R. S. Longacre, W. A. Love, T. .W. Morris, E. D. Platner, A. C. Saulys, S. J. Lindenbaum, C. S. Chan, M. A. Kramer, T. J. Hallman, L. Madansky, B. E. Bonner, J. A. Buchanan, C. N. Chiou, J. M. Clement, M. D. Corcoran, J. W. Kruk, H. E. Miettinen, G. S. Mutchler, F. Nessi-Tedaldi, M. Nessi, J. B. Roberts). 810 Future Plans. Proc. of the Workshop on Heavy Ion Physics at AGS, Brookhaven National Laboratory, March 5-7, 1990, Ole Hansen, Editor, pp. 227-239 (BNL 1990).

T. Hallman, L. Madansky, R. Welsh, B. E. Bonner, N. Krishna, J. Kruk, G. S. Mutchler, M. Nessi, F. Nessi-Tedaldi, S. Tonse, S. E. Eiseman, A. Etkin, K. J. Foley, R. W. Hackenburg, R. S. Longacre, W. A. Love, T. W. Morris, A. C. Saulys, S. J. Lindenbaum, M. A. Kramer, C. S. Chan. First Observation of Λ^0, $\bar{\Lambda}^0$, K_s^0 Production in Relativistic Heavy Ion Collisions at the AGS. Proc. of the Workshop on Heavy Ion Physics at AGS, Brookhaven National Lab., March 5-7, 1990, O. Hansen ed., pp. 182-192 (BNL 1990).

S. Eiseman, A. Etkin, K. J. Foley, R. W. Hackenburg, R. S. Longacre, W. A. Love, T. W. Morris, E. D. Platner, A. C. Saulys, S. J. Lindenbaum, C. S. Chan, M. A. Kramer, K. Zhao, T. J. Hallman, L. Madansky, B. E. Bonner, J. A. Buchanan, C. N. Chiou, J. M. Clement, M. D. Corcoran, J. W. Kruk, G. S. Mutchler, F. Nessi-Tedaldi, M. Nessi, J. B. Roberts. Neutral V Production with 14.6 x A Silicon Beams. Phys. Lett. B248, 254-258 (1990).

K. J. Foley (for the E810 Collaboration: S. Eiseman, A. Etkin, K. J. Foley, R. W. Hackenburg, R. S. Longacre, W. A. Love, T. W. Morris, E. D. Platner, A. C. Saulys, S. J. Lindenbaum, C. S. Chan, M. A. Kramer, K. Zhao, T. J. Hallman, L. Madansky, B. E. Bonner, J. A. Buchanan, C. N. Chiou, J. M. Clement, M. D. Corcoran, J. W. Kruk, G. S. Mutchler, F. Nessi-Tedaldi, M. Nessi, J. B. Roberts. Studies of Central Interactions of Si Ions at 14.5 x A GeV/c in Au and Cu. Submitted to the 25th Intern. Conf. on High Energy Physics, Singapore, August 2-8, 1990.

William A. Love (for the E810 Collaboration: B. E. Bonner, J. A. Buchanan, C. S. Chan, C. N. Chiou, J. M. Clement, M. D. Corcoran, S. E. Eiseman, A. Etkin, K. J. Foley, R. W. Hackenburg, T. J. Hallman, M. A. Kramer, J. W. Kruk, S. J. Lindenbaum, R. S. Longacre, W. A. Love, L. Madansky, T. W. Morris, G. S. Mutchler, M. Nessi, F. Nessi-Tedaldi, E. D. Platner, J. B. Roberts, A. C. Saulys, K. Zhao. Silicon Ion Interactions Measured in the E810 TPC at the AGS. Proc. of QUARK MATTER 90, Menton, France, May 7-11, 1990, J.P. Blaizot, C. Gerschel, B. Pire, and A. Romana, Eds. Nuclear Physics A525, 601c-604c (1991).

Matthew A. Bloomer, William Love, Laurie Waters. New Results from AGS Heavy-Ion Experiments. Proc. of QUARK MATTER 90, Menton, France, May 7-11, 1990,

J.P. Blaizot, C. Gerschel, B. Pire, A. Romana, Eds. Nuclear Physics A525, 601c-604c (1991).

Kenneth J. Foley (for the E810 Collaboration: B. E. Bonner, J. A. Buchanan, C. S. Chan, C. N. Chiou, J. M. Clement, M. D. Corcoran, S. E. Eiseman, A. Etkin, K. J. Foley, R. W. Hackenburg, T. J. Hallman, M. A. Kramer, J. W. Kruk, S. J. Lindenbaum, R. S. Longacre, W. A. Love, L. Madansky, T. W. Morris, G. S. Mutchler, E. Nessi-Tedaldi, M. Nessi, E.D. Platner, J. B. Roberts, A. C. Saulys, and K. Zhao). Studies of Neutral Vee Production by Si Ions at 14.5 x A GeV/c in Au and Cu. Proc. of the 25th Intern. Conf. on High Energy Physics, Singapore, August 2-8, 1990, K. K. Phua and Y. Yamaguchi, Eds., pp. 1092-1093 (South East Asia Theoretical Physics Assoc., Physical Society of Japan and co-sponsoring associations).

S. E. Eiseman, A. Etkin, K. J. Foley, R. W. Hackenburg, R. S. Longacre, W. A. Love, T. W. Morris, E. D. Platner, A. C. Saulys, S. J. Lindenbaum, C. S. Chan, M. A. Kramer, K. Zhao, T. J. Hallman, L. Madansky, B. E. Bonner, J. A. Buchanan, C. N. Chiou, J. M. Clement, G. S. Mutchler, J. B. Roberts. An Experiment to Observe Strange Particle Production in Ion Collisions at the AGS. HIGH ENERGY NUCLEAR COLLISIONS & QUARK GLUON PLASMA. M. Biyajima, H. Enyo, T. Kunihiro, O. Miyamura, Eds.

(Proc. of the Intern. Symposium on High Energy Nuclear Collisions and Quark Gluon Plasma, Kyoto, Japan, June 6-8, 1991) pp. 62-68.

S. J. Lindenbaum (for the E-810 Collaboration: D. L. Adams, S. Ahmad, B. E. Bonner, J. A. Buchanan, C. S. Chan, C. N. Chiou, J. M. Clement, M. D. Corcoran, S. E. Eiseman, T. Empl, A. Etkin, K. J. Foley, R. W. Hackenburg, T. J. Hallman, M. A. Kramer, S. J. Lindenbaum, R. S. Longacre, W. A. Love, L. Madansky, H. E. Miettinen, T. W. Morris, G. S. Mutchler, E. D. Platner, J. B. Roberts, A. C. Saulys, J. Skeens, K. Zhao, Y. Zhu. Results on Search for a QGP with a TPC Magnetic Spectrometer at AGS and Plans for an$\approx 4\pi$ TPC Magnetic Spectrometer at RHIC. Advances in Nuclear Dynamics NAMICS (Proc. of the 7th Winter Workshop on Nuclear Dynamics, Key West, Florida, Jan. 26-Feb. 2, 1991). W. Bauer and J. Kapusta, Eds. pp. 68-78 (World Scientific, 1991).

A. Etkin, S.E. Eiseman, K.J. Foley, R.W. Hackenburg, R. S. Longacre, W. A. Love, T. W. Morris, E. D. Platner, A. C. Saulys, S. J. Lindenbaum, C. S. Chan, M. A. Kramer, K. H. Zhao, Y. Zhu, T. J. Hallman, L. Madansky, S. Ahmad, B. E. Bonner, J. A. Buchanan, C. N. Chiou, J. M. Clement, G. S. Mutchler, J. B. Roberts. Behavior of TPC's in a High Particle Flux Environment. Conference Record of the 1991 IEEE Nuclear Science Symposium and Medical Imaging Conference, November 2-9, 1991, Santa Fe, NM, Vol. 1, pp. 537-541 (1991); and IEEE Transactions on Nuclear Science, Vol. 39 No. 4 (1992) 696-700.

S. Ahmad, B. E. Bonner, J. A. Buchanan, J. M. Clement, A. Empl, G. S. Mutchler, S. Toshkov, S. E. Eiseman, A. Etkin, K. J. Foley, R. W. Hackenburg, R. S. Longacre,

W. A. Love, T. W. Morris, E. D. Platner, L. Madansky, and D. C. Peaslee. A Silicon Multiplicity Detector System for an Experiment on the Interaction of Antiprotons with Nuclei at BNL. Conference Record of the 1991 IEEE Nuclear Science Symposium and Medical Imaging Conference, November 2-9, 1991, Santa Fe, NM, Vol. 1, pp. 377-380 (1991); and IEEE Transactions on Nuclear Science, Vol. 39, No. 4 (1992) 615-618.

S. Ahmad, B. E. Bonner, J. A. Buchanan, C. S. Chan, C. N. Chiou, J. M. Clement, S. E. Eiseman, A. Etkin, K. J. Foley, R. W. Hackenburg, T. J. Hallman, M. A. Kramer, S. J. Lindenbaum, R. S. Longacre, W. A. Love, L. Madansky, T. W. Morris, G. S. Mutchler, E. D. Platner, A. C. Saulys. Transverse Momentum Distributions of π^- from 14.6 x A GeV/c Silicon Ion Interactions in Copper and Gold. Phys. Lett. B281, 29-32 (1992).

K. J. Foley for the E810 Collaboration: D. L. Adams, S. Ahmad, B. E. Bonner, J. A. Buchanan, C. S. Chan, C. N. Chiou, J. M. Clement, M. D. Corcoran, S. E. Eiseman, T. Empl, A. Etkin, K. J. Foley, R. W. Hackenburg, T. J. Hallman, M. A. Kramer, S. J. Lindenbaum, R. S. Longacre, W. A. Love, L. Madansky, H. E. Miettinen, T. W. Morris, G. S. Mutchler, E. D. Platner, J. B. Roberts, A. C. Saulys, J. Skeens, K. Zhao, Y. Zhu. Recent Results from E810. (Proceedings of Quark Matter 1991.) Nuclear Physics A544 (1992) 335c-342c.

S. E. Eiseman, A. Etkin, K. J. Foley, R. W. Hackenburg, R. S. Longacre, W. A. Love, T. W. Morris, E. D. Platner, A. C. Saulys, S. J. Lindenbaum, C. S. Chan, M. A. Kramer, T. J. Hallman, L. Madansky, S. Ahmad, B. E. Bonner, J. A. Buchanan, C. N. Chiou, J. M. Clement, G. S. Mutchler. Rapidity Distributions and Nuclear Transparency in Heavy Ion Collisions. Phys. Lett. B292, 10-12 (1992).

A. Etkin, S. E. Eiseman, K. J. Foley, R. W. Hackenburg, R. S. Longacre, W. A. Love, T. W. Morris, E. D. Platner, A. C. Saulys, S. J. Lindenbaum, C. S. Chan, M. A. Kramer, K. H. Zhao, Y. Zhu, T. J. Hallman, L. Madansky, S. Ahmad, B. E. Bonner, J. A. Buchanan, C. N. Chiou, J. M. Clement, G. S. Mutchler, J. B. Roberts. Behavior of TPC's in a High Particle Flux Environment. Proc. of the Symposium on RHIC Detector R&D, Brookhaven National Laboratory, October 10-11, 1991. Y. Makdisi and A. J. Stevens, Eds. pp. 207-213 (BNL, 1991).

A. Etkin, S. E. Eiseman, K. J. Foley, R. W. Hackenburg, R. S. Longacre, W. A. Love, T. W. Morris, E. D. Platner, A. C. Saulys, S. J. Lindenbaum, T. J. Hallman, C. S. Chan, M. A. Kramer, K. H. Zhao, Y. Zhu, L. Madansky, G. Rai, S. Ahmad, B. E. Bonner, J. A. Buchanan, C. N. Chiou, J. M. Clement, G. S. Mutchler, J. B. Roberts. Effects of High Beam Rates on TPC's. (Proc. of the 6th Wire Chamber Conference, Vienna, Austria, Feb. 17-21, 1992), Nucl. Instruments and Methods in Physics Research A323 (1992) 224-227.

S. J. Lindenbaum (for the E810 Collaboration: A. Etkin, S. E. Eiseman, K. J. Foley, R. W. Hackenburg, R. S. Longacre, W. A. Love, T. W. Morris, E. D. Platner, A. C.

Saulys, S. J. Lindenbaum, T. J. Hallman, C. S. Chan, E. Efstathiadis, M. A. Kramer, K. Zhao, Y. Zhu, L. Madansky, S. Ahmad, B. E. Bonner, J. A. Buchanan, C. N. Chiou, J. M. Clement, G. S. Mutchler). Rapidity Distributions of K_s and Λ's Produced by 14,6 GeV/c Si Beams on Si and Pb Targets. Paper submitted to the 26th Intern. Conf. on High Energy Physics (ICHEP 92), August 6-12, 1992, Dallas, Texas.

S. E. Eiseman, A. Etkin, K. J. Foley, R. W. Hackenburg, R. S. Longacre, W. A. Love, T. W. Morris, E. D. Platner, A. C. Saulys, S. J. Lindenbaum, C. S. Chan, E. Efstathiadis, M. A. Kramer, K. Zhao, Y. Zhu, T. J. Hallman, L. Madansky, S. Ahmad, B. E. Bonner, J. A. Buchanan, C. N. Chiou, J. M. Clement and G. S. Mutchler. Rapidity Distributions of K_s^0s and Λ's Produced by 14.6 x A GeV/c Si Beams on Si and Pb Targets. Phys. Lett. B297 (1992) 44-48.

S. E. Eiseman, A. Etkin, K. J. Foley, R. W. Hackenburg, R. S. Longacre, W. A. Love, T. W. Morris, E. D. Platner, A. C. Saulys, S. J. Lindenbaum, C. S. Chan, E. Efstathiadis, M. A. Kramer, K. Zhao, Y. Zhu, T. J. Hallman, L. Madansky, S. Ahmad, B. E. Bonner, J. A. Buchanan, C. N. Chiou, J. M. Clement and G. S. Mutchler. Ξ^- production in heavy ion collisions at the AGS. Phys. Letts B325 (1994) 322-326.

811 E. C. Booth, K. P. Gall, C. Heisey, E. K. McIntyre, J. P. Miller, B. L. Roberts, W. van Riper, D. Warner, D. A. Whitehouse, N. Hessey, J. Lowe, M. Sakitt, J. Skelly, W. Fickinger, K. Robinson, M. D. Hasinoff, D. F. Measday, A. J. Noble, M. Salomon, and D. Horváth, *A Study of Radiative Hyperon Processes at Brookhaven*, XI International Conference on Particles and Nuclei, Kyoto, 20-24 April 1987.

D. A. Whitehouse, E. C. Booth, K. P. Gall, E. K. McIntyre, J. P. Miller, B. L. Roberts, M. Sakitt, J. Skelly, N. P. Hessey, J. Lowe, M. D. Hasinoff, D. F. Measday, A. J. Noble, W. J. Fickinger, D. K. Robinson, D. Horváth and M. Salomon, *Radiative Kaon Capture in Hydrogen*, Bull. Am. Phys. Soc. **33**, 1022 (1988).

K. P. Gall, E. C. Booth, E. K. McIntyre, J. P. Miller, B. L. Roberts, D. A. Whitehouse, M. Sakitt, J. Skelly, N. P. Hessey, J. Lowe, M. D. Hasinoff, D. F. Measday, A. J. Noble, W. J. Fickinger, D. K. Robinson, D. Horváth and M. Salomon, *Radiative Kaon Capture in Deuterium*, Bull. Am. Phys. Soc. **33**, 1022 (1988).

B. L. Roberts, E. C. Booth, K. P. Gall, E. K. McIntyre, J. P. Miller, D. A. Whitehouse, M. Sakitt, J. Skelly, N. P. Hessey, J. Lowe, M. D. Hasinoff, D. F. Measday, A. J. Noble. W. J. Fickinger, D. K. Robinson, D. Horváth and M. Salomon, Σ^+ *Weak Radiative Decay*, Bull. Am. Phys. Soc. **33**, 1022 (1988).

B. L. Roberts, E. C. Booth, W. Fickinger, K. P. Gall, M. D. Measday, N. P. Hessey, D. Horváth, J. Lowe, E. K. McIntyre, D. F. Measday, J. P. Miller, A. J. Noble, D. K. Robinson, M. Sakitt, M. Salomon, J. Skelly and D. A. Whitehouse, *Radiative Kaon Capture and Hyperon Weak Radiative Decay*, Nucl. Phys. **A479**, 75c (1988).

A. J. Noble, E. C. Booth, W. Fickinger, K. P. Gall, M. D. Hasinoff, N. P. Hessey, D. Horváth, J. Lowe, E. K. McIntyre, D. F. Measday, J. P. Miller, B. L. Roberts, D. K. Robinson, M. Sakitt, M. Salomon, J. Skelly, and D. A. Whitehouse, *$\underline{\Lambda}$ and Σ^+ Weak Radiative Decay*, Proc. of the Third Conference on the Intersection of Particle and Nuclear Physics, Rockport ME, 14-19 May, 1988, AIP Conf. Proc. **176**, 842 (1988).

E. K. McIntyre, E. C. Booth, W. Fickinger, K. P. Gall, M. D. Hasinoff, N. P. Hessey, D. Horváth, J. Lowe, D. F. Measday, J. P. Miller, A. J. Noble, B. L. Roberts, D. K. Robinson, M. Sakitt, M. Salomon, J. Skelly, and D. A. Whitehouse, *Radiative Kaon Capture*, Proc. of the Third Conference on the Intersection of Particle and Nuclear Physics, Rockport ME, 14-19 May 1988, AIP Conference Proc. **176**, 673 (1988).

D. Horváth, M. D. Hasinoff, D. F. Measday, A. J. Noble, C. E. Waltham, E. C. Booth, K. P. Gall, E. K. McIntyre, J. P. Miller, B. L. Roberts, D. A. Whitehouse, N. P. Hessey, J. Lowe, W. J. Fickinger, D. K. Robinson, M. Sakitt, J. F. Skelly, M. Salomon, A. Hallin, B. Bassalleck, K. D. Larson, and D. M. Wolfe, *Experimental Study of Radiative Hyperon Processes following Kaon Capture on the Proton*, Int. Conf. on Mesons and Light Nuclei, Bedujné, Czechoslovakia, August 1988.

D. Horváth, M. D. Hasinoff, D.F. Measday, A.J. Noble, C.E. Waltham, E.C. Booth, K.P. Gall, E.K. McIntyre, J.P. Miller, B.L. Roberts, D.A. Whitehouse, N.P. Hessey, J. Lowe, W.J. Fickinger, D.K. Robinson, M. Sakitt, J.F. Skelly, M. Salomon, A. Hallin, B. Bassalleck, K. D. Larson, and D. M. Wolfe, *Experimental Study of Radiative Hyperon Processes following Kaon Capture on the Proton*, J. Phys. **B,** 160 (1989).

E. K. McIntyre, E. C. Booth, K. P. Gall, J. P. Miller, B. L. Roberts, D. A. Whitehouse, M. Sakitt, J. Skelly, N. P. Hessey, J. Lowe, M. D. Hasinoff, D. F. Measday, A. J. Noble, W. Fickinger, K. Robinson, D. Horváth, M. Salomon, *Radiative Kaon Capture in Hydrogen*, Excited Baryons 88, August 1988, RPI, Troy, N.Y.

D. Horváth, B. Bassalleck, J. R. Hall, K. D. Larson, D. M. Wolfe, N. P. Hessey, J. Lowe, E. C. Booth, K. P. Gall, E. K. McIntyre, J. P. Miller, B. L. Roberts, D. A. Whitehouse, M. Sakitt, W. J. Fickinger, D. K. Robinson, A. L. Hallin, M. Salomon, M. D. Hasinoff, D. F. Measday, A. J. Nobel, and C. E. Waltham, *Radiative Hyperon Processes following Kaon Capture on Protons*, International Seminar on Intermediate Energy Physics, Moscow, USSR, November 17-30, 1989.

D. Horváth, M. D. Hasinoff, D. F. Measday, A. J. Nobel, C. E. Waltham, E. C. Booth, K. P. Gall, E. K. McIntyre, J. P. Miller, B. L. Roberts, D. A. Whitehouse, M. Sakitt, D. K. Robinson, A. L. Hallin, M. Salomon, M. D. Hasinoff, A. J. Noble, and C. E. Waltham, *Radiative Hyperon Processes Following Kaon Capture on Proton*, to be published in the proceedings of the Third International Symposium on Pion-Nucleon and Nucleon-Nucleon Physics, Gatchina, USSR, April 1989.

E. K. McIntyre, E. C. Booth, W. J. Fickinger, K. P. Gall, M. D. Hasinoff, N. P. Hessey, D. Horváth, J. Lowe, D. F. Measday, J. P. Miller, A. J. Noble, B. L. Roberts,

D. K. Robinson, M. Sakitt, M. Salomon, J. F. Skelly and D. A. Whitehouse, *Radiative Kaon Capture in Hydrogen*, Excited Baryons 1988, Proceedings ed. G. Adams, N.C. Mukhopadhyay and P. Stoler, World Scientific, 434-438 (1989).

N. P. Hessey, E. C. Booth, W. J. Fickinger, K. P. Gall, M. D. Hasinoff, D. Horváth, J. Lowe, E. K. McIntyre, D. F. Measday, J. P. Miller, A. J. Noble, B. L. Roberts, D. K. Robinson, M. Sakitt, M. Salomon, J. F. Skelly, D. A. Whitehouse, *A Measurement of the Branching Ratio for the* $\underline{\Sigma}^+ \rightarrow p\underline{\gamma}$ *Decay*, Z. Physik, **C42**, 175 (1989).

D. A. Whitehouse, E. C. Booth, K. P. Gall, E. K. McIntyre, J. P. Miller, B. L. Roberts, J. Lowe, N. P. Hessey, M. D. Hasinoff, D. F. Measday, A. J. Noble, J. Skelly, W. J. Fickinger, D. K. Robinson, D. Horváth, and M. Salomon, *Radiative Kaon Capture at Rest on the Proton*, Phys. Rev. Lett. **63**, 1352 (1989).

B. L. Roberts, E. C. Booth, K. P. Gall, E. K. McIntyre, J. P. Miller, D. A. Whitehouse, J. Lowe, N. P. Hessey, M. D. Hasinoff, D. F. Measday, A. J. Noble, C. E. Waltham, M. Sakitt, W. J. Fickinger, D. K. Robinson, D. Horváth, B. Bassalleck, J. R. Hall, K. D. Larson, D. M. Wolfe, A. L. Hallin and M. Salomon, *Radiative Hyperon Processes,* Nuova Cim. **102 A**, N. 1, 145 (1989).

B. L. Roberts, *Radiative Hyperon Decay*, Excited Baryons 1988, Proceedings ed. G. Adams, N. C. Mukhopadhyay and P. Stoler, World Scientific, 410-410 (1989).

K. P. Gall, E. C. Booth, E. K. McIntyre, J. P. Miller, B. L. Roberts, D. A. Whitehouse, J. Lowe, N. P. Hessey, M. D. Hasinoff, D. F. Measday, A. J. Noble, M. Sakitt, W. J. Fickinger, D. K. Robinson, D. Horváth, M. Salomon, *Radiative Kaon Capture on Deuterium and the* $\underline{\Lambda}n$ *Scattering Lengths*, Phys. Rev. **C**, Rapid Comm., 42, R475 (1990).

A. J. Noble, M. D. Hasinoff, D. F. Measday, C. E. Waltham, E. K. McIntyre, J. P. Miller, B. L. Roberts, D. A. Whitehouse, M. Sakitt, J. F. Skelly, W. J. Fickinger, D. K. Robinson, D. Horváth, B. Bassalleck, J. R. Hall, K. D. Larson, J. Lowe, D. M. Wolfe, A. L. Hallin and M. Salomon, *A study of the weak radiative decay* $\underline{\Lambda} \rightarrow n\underline{\gamma}$, DPF90 Conference, Houston, January 1990, Bull. Am. Phys. Soc., **35**, 1207 (1990).

M. D. Hasinoff, G. Koch, A. J. Noble, M. Sevior, C. E. Waltham, J. P. Miller, B. L. Roberts, T. M. Warner, M. Sakitt, W. J. Fickinger, D. K. Robinson, D. Horváth, B. Bassalleck, J. R. Hall, K. D. Larson, J. Lowe, D. M. Wolfe, N. W. Tanner, *The reaction* $\pi^- p \rightarrow \pi^0\pi^0 n$ *near threshold*, DPF90 Conference, Houston, Jan. 1990, Bull. Am. Phys. Soc. **35**, 1209 (1990).

B. Bassalleck, J. R. Hall, K. D. Larson, J. Lowe, D. M. Wolfe, A. J. Noble, M. D. Hasinoff, D. F. Measday, S. Stanislaus, C. E. Waltham, P. G. Jones, E. K. McIntyre, J. P. Miller, B. L. Roberts, D. A. Whitehouse, M. Sakitt, W. Fickinger, D. K. Robinson, D. Horváth, A. L. Hallin and M. Salomon, *The* $\underline{\Lambda}$ *weak radiative decay* $\underline{\Lambda} \rightarrow n + \underline{\gamma}$, *a status report from Brookhaven experiment 811*, contribution to the 18th

INS Int. Symposium on Physics with High-Intensity Hadron Accelerators, Tokyo, March 14-16, 1990.

K. D. Larson, B. Bassalleck, W. J. Fickinger, J. R. Hall, A. L. Hallin, M. D. Hasinoff, D. Horváth, P. G. Jones, J. Lowe, E. K. McIntyre, D. F. Measday, J. P. Miller, A. J. Noble, B. L. Roberts, D. K. Robinson, M. Sakitt, M. Salomon, S. Stanislaus, C. E. Waltham, T. M. Warner, D. A. Whitehouse, and D. M. Wolfe, *A report on the measurement of the weak radiative decay* $\underline{\Lambda} \rightarrow n + \underline{\gamma}$, Proceedings of the International Conference on Particles and Nuclei, MIT, June 1990, abstract V-29.

B. L. Roberts, B. Bassalleck, E. C. Booth, W. J. Fickinger, K. P. Gall, J. R. Hall, A. L. Hallin, M. D. Hasinoff, N. P. Hessey, D. Horváth, K. D. Larson, J. Lowe, E. K. McIntyre, D. F. Measday, J. P. Miller, A. J. Noble, D. K. Robinson, M. Sakitt, M. Salomon, C. E. Waltham, D. A. Whitehouse, D. M. Wolfe, *Weak Radiative Hyperon Decays*, Int. Symp. on Weak Interactions and Neutrino Physics, Ginosar, Israel, April 1989, Nucl. Phys. **B13**, 449 (1990).

A. J. Noble, K. D. Larson, B. Bassalleck, W. J. Fickinger, J. R. Hall, A. L. Hallin, M. D. Hasinoff, D. Horváth, J. Lowe, E. K. McIntyre, D. F. Measday, J. P. Miller, B. L. Roberts, D. K. Robinson, M. Sakitt, M. Salomon, C. E. Waltham, T. M. Warner, D. A. Whitehouse, D. M. Wolfe, *Measurement of the* $\underline{\Lambda} \rightarrow n\underline{\gamma}$ *branching ratio*, Phys. Rev. Lett. **69**, 410 (1992).

813 P. H. Pile, "A New 1-2 GeV/c Beam Line for BNL. Accepted for publications by Nuclear Instruments and Methods (1992).

V. Sum, A. R. Berdoz, D. Z. Davis, S. A. Page, W. D. Ramsay, W. T. H. van Oers, R. A. Schumacher, V. J. Zeps, D. R. Gill, T. Iijima, K. Okada, F. Takeutchi, "A Time-of-Flight array for 1 to 2 GeV/c particles. Nucl Inst. and Methods in Physics Research, A326 489-495, North-Holland (1993).

K. Imai. "Experimental Study of S = -2 system and S = -2 B-B interaction. Presented at Maui Symposium '93.

Toru Iijima for BNL-E813 Collaboration. "Search for the H Dibaryon by Ξ^- Capture on the Deuteron." PANIC Meeting, July 1993.

814 B. Bassalleck *et al.*, "Transverse Energy Distributions in Si-Nucleus Collisions at 160 GeV/nucleon." Proc. Quark Matter 1987 Conference, Z. Physik, C38 (1988) 45, H. J. Specht, editor.

S. V. Greene *et al.*, "Search for Strange Matter in Relativistic Heavy Ion Collisions," Proc. Nato Advanced Study Inst. on the Nuclear Equation of State, May 1989, Peniscola, Spain, W. Greiner and H. Stoecker, editors, Nato ASI Series Vol. 216B (1989) 117.

M. Fatyga, D. Makowiecki and W. J. Llope, "Fast Monte Carlo Simulation of U/Cu/Sci Calorimeters," Nucl. Inst. Meth. A284 (1989) 323.

J. Barrette *et al.*,"Electromagnetic Dissociation of ^{28}Si at E_{lab}/A = 14.6 GeV by Nucleon Emission," Phys. Rev. C41 (April 1990) 1512.

J. Barrette *et al.*, "Energy Flow and Stopping in Relativistic Heavy Ion Collisions at E_{lab}/A = 14.6 GeV," Phys. Rev. Lett. 64 (1990) 1219.

J. Barrette *et al.* "Search for Strange Quark Matter in High Energy Heavy Ion Collisions," Phys. Lett. B 252 (1990) 550.

R. Debbe *et al.*, "A Study of Wire Chambers with Highly Segmented Cathode Pad Read-Out for High Multiplicity Charged Particle Detection," IEEE Trans. Nucl. Sci. 37 (1990) 82.

R. Bellwied *et al.*, "Baryon Spectra in the Low Pt Region," Proc. Workshop on Heavy Ion Physics at the AGS (HIPAGS), March 1990, O. Hansen, Editor, BNL-44911.

B. Shiva Kumar *et al.*, "Global Observables in Si-Nucleus Collisions at 14.6 GeV/nucleon," Proc. Workshop on Heavy Ion Physics at the AGS (HIPAGS), March 1990, O. Hansen, editor, BNL-44911.

J. R. Hall *et al.*, "Charged Particle Multiplicity in Relativistic Heavy Ion Collisions," Proc. Workshop on Heavy Ion Physics at the AGS (HIPAGS), March 1990, O. Hansen, editor, BNL-44911.

M. Fatyga *et al.*, "Studying Extremely Peripheral Collisions of Relativistic Heavy Ions," Proc. Workshop on Heavy Ion Physics at the AGS (HIPAGS), March 1990, O. Hansen, editor, BNL-44911.

J. Fischer *et al.*, "A Many Particle Tracking Detector with Drift Planes and Segmented Cathode Read-Out," IEEE Transactions on Nuclear Science 37 (1990) 88.

W. J. Llope and P. Braun-Munzinger, "Electromagnetic Dissociation of Relativistic Heavy Ions," Phys. Rev. C (April 1990).

J. Simon-Gillo *et al.*, "PCal Construction," Nucl. Instr. Meth. A309 (1991 427.

W. E. Cleland *et al.*, "Energy Flow and Nucleon Spectra in Central Collisions of 14.6 GeV/nucleon Si with Al, Cu, and Pb," Proc. Quarkmatter 90, Menton, Nucl. Phys. A525 (1991) 91c.

T. K. Hemmick *et al.*, "Production of Exotic Objects," Proc. Quarkmatter 90, Menton, Nucl. Phys. A525 (1991) 369c.

M. A. Bloomer, W. A. Love and L. Waters for the E802, E810, and E814 collaborations, "Recent Results from Relativistic Heavy Ion Experiments at the AGS," Proc. PANIC XX, MIT, June 1990, Nucl. Phys. A527 (1991 595c.

F. Rotondo *et al.*, "Search for Strange Quark Matter," Nucl. Phys. B24 (Proc. Suppl.) (1991) 265.

R. Bellwied *et al.*, "Forward Baryons in 14.6 GeV/nucleon Heavy Ion Collisions," Proc. 7th Winter Workshop on Nuclear Dynamics, Key West, Jan. 1991, J. Kapusta and W. Bauer, editors.

B. Shiva Kumar *et al.*, "What Can We Learn from Studies of Proton and Antiproton Distributions at AGS Energies?" Proc. 7th Winter Workshop on Nuclear Dynamics, Key West, Jan. 1991, J. Kapusta and W. Bauer, editors.

J. Stachel for the E814 collaboration, "Global Variables and Forward Baryons in 14.6 GeV/nucleon Si-Nucleus Collisions," Proc. 4th Int. Conf. Nucleus-Nucleus Collisions, Kanazawa, Japan, June 1991, Nucl. Phys. A (in print).

J. Stachel for the E814 collaboration, "Global Variables and Forward Baryons in 14.6 GeV/nucleon Si-Nucleus Collisions," Proc. Int. Symposium on High Energy Nuclear Collisions and Quark-Gluon Plasma, Kyoto, Japan, June 1991, T. Kunihiro, editors, World Scientific 1992, p. 167.

J. Barrette *et al*, "Charged Particle Multiplicity in ^{28}Si+Al, Cu, Pb Reactions at E_{lab} = 14.6 GeV/nucleon," Phys. Rev. C46 (1992) 312.

J. Barrette *et al.*, "Excitation Energy Distribution of Relativistic ^{28}Si in Electromagnetic Dissociation into p+^{27}Al," Phys. Rev. C45 (1992) 2427.

J. Barrette *et al.*, "Production of Neutron-Rich Isotopes from the Fragmentation of ^{28}Si Projectiles at P_{lab} = 14.6 GeV/c per Nucleon," Phys. Rev. C (submitted, Feb. 1992).

P. Braun-Munzinger for the E814 Collaboration, "Recent Results from Experiment 814 at Brookhaven," Quark Matter '91 Conference, Gatlinburg, Nov. 1991, Nucl. Phys. A544 (1992) 137c.

M. S. Muthuswamy for the E814 collaboration, "Momentum Distributions of Light Mass Fragments in Si-Nucleus Collisions at 14.6 GeV/nucleon, Quark Matter '91 Conference, Gatlinburg, Nov. 1991, Nucl. Phys. A544 (1992) 423c.

S. V. Greene for the E814 Collaboration, "Antiproton Production in ^{28}Si-nucleus Interactions," Quark Matter '91 Conference, Gatlinburg, Nov. 1991, Nucl. Phys. A544 (1992) 599c.

D. Fox *et al.*, "Response of the Participant Calorimeter to 1.5-6.8 GeV/c Electrons and Hadrons," Nucl. Instr. Methods A317 (1992) 474.

T. K. Hemmick for the E814 Collaboration, "Recent Results from Experiment 814," Proc. XXI Winter Workshop on Nuclear Dynamics, Jackson Hole, WY, Feb. 1992, W. Bauer, editor, in print.

J. Barrette *et al.*, "Antiproton Production in Relativistic Nucleus-Nucleus Collisions," Phys. Rev. Lett. (in print).

J. Barrette *et al*, "Baryon Distributions in Ultra-Relativistic Nucleus-Nucleus Collisions," Phys. Rev. Lett. (submitted Oct. 1992).

S. Voloshin for the E814 Collaboration, "Two-Particle Correlations in the Si+A Collisions at 14.6 A GeV/c," HIPAGS 3 Symposium, Boston, January 1993, S. Steadman editor, in print.

Z. Zhang for the E814 Collaboration, "Transverse Energy Production in Collisions with ll.4A GeV/c Au Beam", HIPAGS 3 Symposium, Boston, Jan. 1993, S. Steadman, editor, in print.

T. Hemmick for the E814 Collaboration, "Hadron Production at Low pt in E814," HIPAGS 3 Symposium, Boston, Jan. 1993, S. Steadman, editor, in print.

J. Dee for the E814 Collaboration, "Baryon Density and Stopping in E814," HIPAGS 3 Symposium, Boston, Jan 1993, S. Steadman, editor, in print.

C. Pruneau for the E814 Collaboration, "Distribution of Global Variables in Si+A and Au + A Collisions," HIPAGS 3 Symposium, Boston, Jan. 1993, S. Steadman, editor, in print.

N. Xu for the E814 Collaboration,"Two-Particle Correlations from Si+Pb Collisions at 14.6 A GeV/c," HIPAGS 3 Symposium, Boston, Jan. 1993, S. Steadman, ed., in print.

S. Kumar for the E814 Collaboration, "Antiproton Production in Si+A Collisions at 14.6 A GeV/c," HIPAGS 3 Symposium, Boston, Jan. 1993, S. Steadman, editor, in print.

T. K. Hemmick for the E814 Collaboration, "Hadron Production and Correlations from E814," Proc. XXII Winter Workshop on Nuclear Dynamics, Key West, Florida, Feb. 1993, B. Back, editor, in print.

815 M. I. Adamovich *et al.*, "Multiplicities and Rapidity in 200 A GeV ^{16}O Interactions with Emulsion Nuclei," Phys. Rev. Lett. B201, 397 (1988).

S. Garpman *et al.*, "A Computer Based Coordinate Measuring Station for Nuclear Emulsion Chambers," Nucl. Instr. Meth. A269, 134 (1988).

M. I. Adamovich *et al.*, "Scaling Properties of Charged Particle Multiplicity Distributions in Oxygen Induced Emulsion Interactions at 14.6, 60 and 200 A GeV," Phys. Lett. B, *223*, 262 (1989).

M. I. Adamovich *et al.*, "Limiting Fragmentation in Oxygen-Induced Emulsion Interactions at 14.6, 60 and 200 GeV/nucleon," Phys. Rev. Lett. *62*, 2801 (1989).

M. I. Adamovich *et al.*, "Production of helium (Z=2) Projectile Fragments in ^{16}O-Emulsion Interactions from E/A=2 to 200 GeV," Phys. Rev. C *40*, 66 (1989).

M. I. Adamovich *et al.*, "A Study of Recoil Protons in Ultra-Relativistic Nucleus-Nucleus Collisions," Phys. Lett. B *230*, 175 (1989).

M. I. Adamovich *et al.*, "Charged Particle Spectra in Oxygen-Induced Reactions at 14.6 and 60 GeV/Nucleon," High Energy Physics and Nuclear Physics in China 13, 865 (1989). [English and Chinese.]

M. I. Adamovich *et al.*, "Rapidity Densities and their Fluctuations in Central 200A GeV ^{32}S Interactions with Au and Ag, Br. Nuclei," Phys. Lett. 227B, 285 (1989).

M. I. Adamovich *et al.*, "On the Multiplicity Fluctuations in Relativistic Heavy Ion Collisions," Lund Univ. Preparing LUIP 8912 (1989). Submitted to Phys. Lett. B.

S. Persson, "Measurement and Three-Dimensional Reconstruction of Particle Tracks in Emulsion Chambers," Comp. Phys. Comm. 55, 103 (1989).

E. Stenlund *et al.*, "A Search for Non-Statistical Particle Density Fluctuations in ^{16}O + Ag(Br) and ^{32}S + Au Interactions at 200 A GeV," Nucl. Phys. A498, 541c (1989).

M. I. Adamovich *et al.*, "On the Energy and Mass Dependence of the Multiplicity in Relativistic Heavy Ion Interactions," Modern Physics Letters A 5, 169 (1990).

M. I. Adamovich *et al.*, "Target Nucleus Fragmentation in ^{16}O + (Ag,Br) Interactions at 200 A GeV," Phys. Lett. 234B, 180 (1990).

M. I. Adamovich *et al.*, "Scaled Factorial Moment Analysis of 200 A GeV Sulphur + Gold Interactions," University of Washington Preprint UWSEA PUB 90-4 (Seattle, 1990). Submitted to Phys. Rev. Lett.

M. I. Adamovich *et al.*, "Substructural Dependence of Multiparticle Production in Relativistic Heavy Ion Interactions," submitted to Modern Physics Letters A.

I. Otterlund *et al.*, "Limiting Fragmentation, Scaling and Substructural Dependence of Multiparticle Production in High Energy Heavy Ion Interactions, to appear in Physica Scripta (1990).

816 P. Astier, "Search for neutrino oscillations," Proceedings of BNL Neutrino Workshop, M. Murtagh, ed. (1987).

P. Astier *et al.* Search for Neutrino Oscillations. Phys. Lett. 220B (1989), 646.

817 B. E. Bonner, *et al.*, "Spin transfer in hyperon production," Phys. Rev. Lett. *58*, 447 (1987).

B. E. Bonner, *et al.*, "Spin-parameter measurements in Λ and K_s production," Phys. Rev. D *38*, 729 (1988).

B. E. Bonner, *et al.*, "Spin-Parameter Measurements in Inclusive Σ^0 Production," Phys. Rev. Lett. *62*, 1591 (1989).

B. E. Bonner, *et al.*, "Analyzing power of inclusive production of $\pi^+\pi^-$, and K^0_S by polarized protons at 13.3 and 185 GeV/c,"Phys. Rev. D, *41*, 13 (1990).

821 V. Hughes, "The Muon Anomalous Magnetic Moment," Physica Scripta, T22, 111 (1988).

L. M. Barkov *et al.*, "The Anomalous Magnetic Moment of the Muon," Proc. 9th International Symposium on High Energy Spin Physics (1990).

B. L. Roberts, "The New Muon g-2 Experiment at BNL," Proc. International Symposium on the Future of Muon Physics (1991).

V. W. Hughes, "The Anomalous Magnetic Moment of the Muon," Proc. Second International Symposium on Particles, Strings and Cosmology, 868, Boston, MA, 25-30 March 1991. World Scientific, Pran Nath and Stephen Reucroft, eds.

G. T. Danby, W. Meng, W. B. Sampson, K. Woodle, "Magnetic Flux Shielding for the Precision Muon g-2 Storage Ring Superconducting Inflector." Presented to 13th International Conference on Magnet Technology, Victoria, B. C. Canada (1993).

L. X. Jia, L. J. Addessi, J. R. Cullen, Jr., A. J. Esper, M. A. Green, R. E. Meier, C. Pai, L. P. Snydstrup, T. N. Tallerico, "Cryogenics for the Muon g-2 Superconducting Magnet System." Submitted to 15th International Cryogenic Engineering Conference, Genoa, Italy, (1994).

L. X. Jia, L. J. Addessi, J. R. Cullen, Jr., A. J. Esper, R. E. Meier, C. Pai, L. P. Snydstrup, "Design Parameters for Gas-Cooled Electrical Leads of the g-2 Magnets." Presented at 15th International Cryogenic Engineering Conference, Genova, Italy (1994).

F. Krienen, G. T. Danby, W. Meng, C. Pai, W. B. Sampson, S. A. Woodle, M. A. Green, A. Yamamoto, H. Hirabayashi. "The Superconducting Inflector Dipole for the Muon g-2 Storage Ring." Submitted to 1994 Applied Superconductivity Conference, Boston, MA (1994).

Michael A. Green and W. Meng. Magnetization Effects from the g-2 Inflector Magnet Superconductor. Submitted to 1994 Applied Superconductivity Conference, Boston, Massachusetts. (1994).

825 J. B. Cumming, Y. Y. Chu, and P. E. Haustein. "Momentum transfer in the reactions of 13.6-GeV/nucleon ^{16}O with copper." Phys. Rev. C, *46*, 2042-2046 (1992).

828 R. E. Chrien, *et al.* "Search for bound states of the η-meson in light nuclei." Phys. Rev. Lett. *60*, 2595-8 (1988).

P. H. Pile, "A search for bound states of the η-meson in light nuclei." Proc. 3rd Conf. on the Intersections Between Particle and Nuclear Physics, May 14-19, 1988, Rockport, ME. G. M. Bunce, Editor, AIP Conference Proceedings 176, 719-724.

834 A. S. Carroll *et al.* "Nuclear Transparency to Large-Angle *pp* Elastic Scattering,: Phys. Rev. Lett., *61*, 1698 (1988).

835 J. Alster, in Workshop on Nuclear Structure with Medium Energy Probes, Santa Fe, NM, 1988.

AGS Experiment 835 Collaboration, "Kaon-Nucleus Total Cross Sections," PANIC XII International Conf. on Particles and Nuclei, Cambridge, MA. June 25-29, 1990.

Y. Mardor, "K^+ Total Cross Sections and Swelling in Nuclei." Thesis submitted toward the M.Sc. degree in at Tel-Aviv University (1990).

R. A. Krauss *et al.*, "K^+ total cross sections on ^{12}C and medium effects in nuclei," Phys. Rev. C 46, 655 (1992).

J. Alster (representing collaboration). K^+-nucleus total cross section experiment and nuclear medium effects. Nucl. Phys. A547, 321c-30c (1992).

R. E. Chrien. The K^+ as a probe of nuclear medium effects. Invited talk. Workshop on Strangeness in Nuclei, Krakow, Poland, May 5-7, 1992. To appear in Nukleonika.

Y. Mardor *et al.* K^+ total cross sections as a test for nucleon "swelling." Phys. Rev. Lett. 65, 2110-13 (1990).

R. Sawafta *et al.* "The influence of the nuclear medium on K^+ total cross sections." Submitted to Phys. Rev. Lett.

R. Sawafta (Exp. 835 Collaboration). The K^+ meson as a probe of the nuclear medium. Invited talk. Fourth Conference on the Intersections between Particle and Nuclear Physics, Tucson, Arizona, May 24-29, 1991, W.T.H. van Oers, Editor, AIP Conf. Series 243, 582-7 (1992).

R. Weiss, Thesis, M.Sc. Degree, Tel-Aviv University.

E. Piasetzky, "The Measurement of Nuclear Medium Effects with K^+." International Symposium on Medium Energy Physics, Beijing, August 1994.

840 Y. Semertzidis *et al.*, "An Experiment to Produce Light Pseudoscalars and QED Vacuum Polarization." Proceedings of the Workshop on Cosmic Axions (BNL, 1989), C. Jones and A. C. Melissinos, eds., World Scientific, P. 137 (1990).

Y. Semertzidis *et al.*, "Limits on the Production of Light Scalar and Pseudoscalar Particles," Phys. Rev. Lett. **64**, 2988 (1990).

Y. K. Semertzidis, "Coherent Production of Light Pseudoscalars (Axions) Inside a Magnet Field with a Polarized Laser Beam," University of Rochester, Department of Physics and Astronomy, Rochester, NY. UR-1141, ER-13065-603. Jan. 17, 1991.

R. Cameron *et al.*, "Measurement of the Magnetic Birefringence of Neon Gas," J. Opt. Soc. Am **B8**, 520 (1991)

R. Cameron *et al.* "First measurement of the Magnetic Birefringence of Helium Gas", Phys. Letts. A157, (1991).

D. M. Lazarus *et al.*, "A Search for Solar Axions," Phys. Rev. Lett. **69**, 2333 (1992).

G. Ruoso *et al.*, "Limits on Light Scalar and Pseudoscalar Particles from a Photon Regeneration Experiment" University of Rochester, Department of Physics and Astronomy, Rochester, NY. UR-1248, ER-13065-697, January 1992.

G. Ruoso, R. Cameron, A.C. Melissinos, Y. Semertzidis, H. J. Halama, D. M. Lazarus, A. G. Prodell, F. Nezrick, C. Risso, E. Zavattini, "Search for Photon Regeneration in a Magnetic Field," Zeits. fur Phys. C56, 505 (1992).

R. Cameron *et al.*, "Search for Nearly Massless, Weakly Coupled Particles by Optical Techniques," Phys. Rev. D (to be published).

R. Cameron *et al.*, A Search for the Coherent Production of Axions in the milli eV Range, Particles and Fields 1991, 1002 (1991).

845 W. M. Morse *et al.*, "Observation of the decay mode $K_L^0 \rightarrow \gamma\gamma ee$," Phys. Rev. D, 45, 36 (1992).

K. E. Ohl, *et al.*, "A Measurement of the Branching Ratio and Form Factor for $K_L \rightarrow e^+e^-\gamma$," Phys. Rev. Lett., 65, 1407 (1990).

K. E. Ohl, *et al.* "Improved Experimental Limit on KL → π0e+e-. Phys. Rev. Lett. 64, 2755, (1990).

W. M. Morse *et al.*, "Results from AGS E845: $K^0_L \rightarrow \pi^0e^+e^-$, $e^+e^-\gamma$, $e^+e^-e^+e^-$," Proc. of the Conference on the Intersections Between Particle and Nuclear Physics, Tucson, AZ, May 24-29, 1991, AIP Conf. Proc. 243.

W. M. Morse *et al.*, "Search for the Decay $K^0_L \rightarrow \pi^0e^+e^-$," Nuc. Phys. A527 (1991) 717c-720c.

K. E. Ohl *et al.*, "Improved Experimental Limit on $K^0_L \rightarrow \pi^0e^+e^-$," Phys. Rev. Lett. 23, 2755 (1990).

847 G. Singh, A. Z. M. Ismail and P. L. Jain, "Characteristics of helium fragments produced in ^{28}Si emulsion and interactions at 14.5 GeV," Phys. Rev. C, **43**, 2417 (1991).

P. L. Jain, G. Singh, and K. Sengupta, "Rapid Communications," Phys. Rev. C., Vol. 43, No. 5 (1991).

P. L. Jain, G. Singh, and K. Sengupta, "Comparison of Nucleus-Nucleus Interactions at 14.5 - 200A GeV with a Multistring Model, Phys. Rev. **C43**, R2027 (1991).

P. L. Jain and G. Singh, "One- and Two-dimensional Analysis of Intermittency in Ultra-relativistic Nucleus-Nucleus Interactions," Phys. Rev. **C44**, 854 (1991).

P. L. Jain, G. Singh, and K. Sengupta, "Intranuclear Cascading at Ultrahigh Energy in Heavy-ion Interactions," Z. Phys. **C52**, 465 (1991).

P. L. Jain and G. Singh, "Investigation of Intermittency in ^{28}Si-nucleus Collisions at 14.5A GeV," Mod. Phys. Lett. **A7**, 93 (1992).

P. L. Jain and G. Singh, "Intermittency in Relativistic Heavy-ion Collisions," Z. Phys. **C53**, 355 (1992).

850 J. A. Appel, J. Botts, G. Bunce, G. Farrar, S. Pordes. Color Transparency Study Group. BNL-45319.

J. Wu, E. D. Minor, J. E. Passaneau, S. F. Heppelmann, Chu Ng, G. Bunce, I. Mardor. The EVA trigger: Transverse momentum selection in a solenoid. Nuclear Instruments and Methods in Physics Research A 349 (1994) 183-196. (BNL=61039)

851 A. Deshpande *et al.*, Determination of the Branching Ratio of the Decay $\pi^0 \rightarrow e^+e^-$, DFT 1993, The Fermilab Meeting, to be published.

A. Deshpande *et al.*, Determination of the Branching Ratio of the Decay $\pi^0 \rightarrow e^+e^-$, Phys. Rev. Lett., to be published.

852 A. Dzierba and S. Tiege for the E852 Collaboration, "First Results from the E852 Tests of a 320-Element Lead-Glass Calorimeter. AGS Users Newsletter June 24, 1992.

Z. Bar-Yam *et al.*, A cylindrical drift chamber of novel design. Nucl. Instrum. & Methods (in press).

B. B. Brabson, et al. A study of two prototype lead glass electromagnetic calorimeters. Nucl. Instrum. & Method A332, 419-43 (1993).

A. R. Dzierba, "Meson Spectroscopy with π and K Beams." To appear in the Proceedings of the Workshop on Future Directions in Particle and Nuclear Physics at Multi-GeV Facilities, Brookhaven National Laboratory, March 4-6, 1993.

854 S. Ahmad *et al.*, A Silicon Multiplicity Detector System for an Experiment on the Interaction of Antiprotons with Nuclei at BNL. IEEE Transaction on Nuclear Science, Vol. 39, (1992) 615-618.

S. Ahmad *et al.*, Antiproton Nucleus Interactions at 5 to 9 GeV/c. Invited contribution at the Second Biennial Conference on Low Energy Antiproton Physics, Courmayer, Aosta Valley, Italy, Sept. 14-19, 1992. The paper will be published in Nuclear Physics A.

857 J. Lowe, B. Bassalleck, J. R. Hall, K. D. Larson, D. M. Wolfe, M. D. Hasinoff, G. Koch, A. J. Noble, M. Sevior, C. E. Waltham, J. P. Miller, B. L. Roberts, T. M. Warner, M. Sakitt, W. J. Fickinger, D. K. Robinson, D. Horváth and N. W. Tanner, *The reaction $\pi^- p \rightarrow \pi^0\pi^0 n$ near threshold and chiral symmetry breaking*, Proceedings of the International Conference on Particles and Nuclei, MIT, June 1990, abstract III-3.

M. D. Hasinoff, G. Koch, A. J. Noble, M. Sevior, C. E. Waltham, J. P. Miller, B. L. Roberts, T. M. Warner, M. Sakitt, W. J. Fickinger, D. K. Robinson, D. Horvath, B. Bassalleck, J. R. Hall, K. D. Larson, J. Lowe, D. M. Wolfe, N. W. Tanner, The reaction $\pi^- p \rightarrow \pi^0\pi^0 n$ near threshold, Bull. Am. Phys. Soc. **35**, 1209 (1990).

J. Lowe *et al.*, "$\pi^- p \rightarrow \pi^0\pi^0 n$ near threshold and chiral symmetry breaking, Phys. Rev. C 44, 956 (1991.

J. Lowe, B. Bassalleck, H. Burkhardt, W. J. Fickinger, J. R. Hall, M. D. Hasinoff, D. Horvath, G. Koch, K. D. Larson, J. P. Miller, A. J. Noble, B. L. Roberts, D. K. Robinson, M. Sakitt, M. E. Sevior, N. W. Tanner, C. E. Waltham, T. M. Warner, and D. M. Wolfe, The reaction $\pi^- p \rightarrow \pi^0\pi^0 n$ near threshold and chiral symmetry breaking, πN Newsletter No. 3, Sept. 1991, ed. R. E. Cutkosky, G. Höhler, W. Kluge, B. M. K. Nefkens, p. 47.

J. Lowe, B. Bassalleck, H. Burkhardt, W. J. Fickinger, J. R. Hall, M. D. Hasinoff, D. Horváth, G. Koch, K. D. Larson, J. P. Miller, A. J. Noble, B. L. Roberts, D. K. Robinson, M. Sakitt, M. E. Sevior, N. W. Tanner, C. E. Waltham, T. M. Warner, D. M. Wolfe, *The reaction $\pi^- p \rightarrow \pi^0\pi^0 n$ near threshold and chiral symmetry breaking*, Phys. Rev. **C44**, 956 (1991).

H. Burkhardt and J. Lowe, The global analysis of $\pi N \rightarrow \pi\pi N$ data, Phys. Rev. Lett. **67**, 2622 (1991).

J. Lowe, B. Bassalleck, H. Burkhardt, W. J. Fickinger, J. R. Hall, M. D. Hasinoff, D. Horvath, G. Koch, K. D. Larson, J. P. Miller, A. J. Noble, B. L. Roberts, D. K. Robinson, M. Sakitt, M. E. Sevior, N. W. Tanner, C. E. Waltham, T. J. Warner and D. M. Wolfe, The reaction $\pi^- p \rightarrow \pi^0\pi^0 n$ near threshold and chiral symmetry breaking, abstract contributed to the Fourth Conference on Intersections between Particle and Nuclear Physics, Tucson AZ, May 24-29, 1991.

H. Burkhardt and J. Lowe, A global analysis of $\pi N \rightarrow \pi\pi N$ data, invited talk at the Fourth International Symposium on Pion-nucleon Physics and the Structure of the Nucleon, Bad Honnef, Germany, September 9-13, 1991, πN Newsletter.

H. Burkhardt and J. Lowe, Amplitudes for $\pi N \rightarrow \pi\pi N$ reactions, submitted to πN Newsletter.

858 M. Aoki *et al.* "Measurements of 0° of Negatively Charged Particles and Antinuclei Produced in Collision of 14.6*A* GeV/*c* Si on Al, Cu, and Au Targets." Phys. Rev. Letts. **69**, 2345-48 (1992).

862 "Electromagnetic Dissociation by a 10.2 GeV/n Au Beam," L. Ewell, J. C. Hill, F. K. Wohn, B. Libby, and J. B. Cumming; Bull. Amer. Phys. Cos. 39, 1196 (1994).

863 H. H. Heckman *et al.*, "Nuclear Breakup and Particle Densities in 200 A GeV - ^{16}O Interactions with Emulsion Nuclei," Proc. of XVIII Int. Symp. on Multiparticle Dynamics, Tashkent, USSR, Sept. 1987.

K. B. Bhalla *et al.*, "Particle Densities and Nuclear Breakup in ^{16}O-Emulsion Interactions," Proc. Int. Europhysics Conf. on High Energy Physics, Uppsala, Sweden, June 25-July 1, 1987 (Petit-Lancy, Switzerland: Eur. Phys. Soc. 1987) vol. I, p. 155.

E. Monnand *et al.*, "Pseudorapidity Densities in Central ^{16}O interactions at 200 A GeV," Proc. Workshop held at Moscow, Russia, August 1987, during the 20th Int. Cosmic Ray Conf., Moscow, Lebedev, 1988 pp. 4-10, 1988.

M. I. Adamovich *et al.*, "Multiplicities and Rapidity Densities in 200 A GeV ^{16}O Interactions with Emulsion Nuclei," Phys. Lett. B201, 397 (1988).

E. Friedlander *et al.*, "A Search for Non-Statistical Fluctuations and Structures in the Rapidity Density Distribution of ^{16}O + Ag(BR) and ^{32}S + Au Interactions at 60 and

200 A GeV." Proc. Hadronic Matter in Collisions, Tucson, Arizona, USA, 1988, pp. 210-221, Ed: P. Carruthers and J. Rafelski, World Scientific, Singapore.

S. Garpman *et al.*, "A Computer Based Coordinate Measuring Station for Nuclear Emulsion Chambers," Nucl. Instr. Meth. A269, 134 (1988).

S. Lokanathan *et al.*, "The EMU-01 Experiment: A Status Report," Proc. Int. Conf. on Physics and Astrophysics of Quark Gluon Plasma, Bombay, India, Feb. 1988, pp. 514-522, Ed: B. Sinha and S. Raha, World Scientific, Singapore.

M. I. Tretyakova *et al.*, "Central intersections of ^{16}O Nuclei with heavy nuclei of photo emulsion at 200 GeV/Nucleon," Lebedev Reprint 244 (1988). Communication at IX Int. Seminar on High Energy Physics Problems-Relativistic Nuclear Physics and Quantum Chromodynamics, Dubna, June 1988.

R. J. Wilkes *et al.*, "Pseudorapidity Distributions and Correlations in Central ^{16}O Intersections at 200 A GeV," Proc. 3rd Conf. on the Intersections between Particle and Nuclear Physics, Rockport, ME, USA, 14-15 May 1988. AIP Conf. Proc. 176, 1047 (1988).

M. I. Adamovich *et al.*, "Production of Helium (Z=2) Projectile Fragments in ^{16}O Interactions at 14.6, 60 and 200 A GeV," Phys. Rev. C. 40, 66 (1989).

M. I. Adamovich *et al.*, "Limiting Fragmentation in Oxygen Induced Emulsion Interactions at 14.6, 60 & 200 A GeV," Phys. Rev. Lett. 62, 2801 (1989).

M. I. Adamovich *et al.*, "Scaling Properties of Charged Particle Multiplicity Distribution in Oxygen Induced Emulsion Interactions at 14.6, 60 and 200 A GeV," Phys. Lett. 223B, 262 (1989).

M. I. Adamovich *et al.*, "Charged Particle Spectra in Oxygen Induced Reactions at 14.6 and 60 GeV/Nucleon," High Energy Physics and Nuclear Physics in China 13, 865 (1989). (English and Chinese).

M. I. Adamovich *et al.*, "Rapidity Densities and their Fluctuations in Central 200 A GeV ^{32}S Interactions with Au and AG, Br nuclei," Phys. Lett. 227B, 285 (1989).

M. I. Adamovich *et al.*, "A Study of Recoil Protons in Ultra-Relativistic Nucleus-Nucleus Collisions," Phys. Lett. 230B, 175 (1989).

E. Ganssauge *et al.*, "A Track Reconstruction Program (TRP) for Evaluation of Nucleus-Nucleus Collisions in Nuclear Track Emulsion Chambers," Comp. Phys. Comm. 55, 233 (1989).

S. Persson, "Measurement and Three-Dimensional Reconstruction of Particle Tracks in Emulsion Chambers," Comp. Phys. Comm. 55, 103 (1989).

E. Stenlund *et al.*, "A Search for Non-Statistical Particle Density Fluctuations in ^{16}O + Ag(Br) and ^{32}S + Au Interactions at 200 A GeV," Nucl. Phys. A498, 541c (1989).

M. I. Adamovich *et al.*, "On the Energy and Mass Dependence of the Multiplicity in Relativistic Heavy-Ion Interactions," Modern Physics Letters A5, 169 (1990).

M. I. Adamovich *et al.*, "Target Nucleus Fragmentation in ^{16}O + (Ag,Br) Interactions at 200 A GeV," Phys. Lett. 234B, 180 (1990).

M. I. Adamovich *et al.*, "On the Multiplicity Fluctuations in Relativistic Heavy-Ion Collisions, " Phys. Lett. 242B, 512 (1990).

M. I. Adamovich *et al.*, "Scaled Factorial Moment Analysis of 200 A GeV Sulphur + Gold Interactions," Phys. Rev. Lett. 65, 412 (1990).

M. I. Adamovich *et al.*, "Energy, Projectile, Multiplicity and Window Dependence of Intermittency Behavior in High-Energy O(S)-Emulsion Interactions," accepted for publication in Z Phys. C.

M. I. Adamovich *et al.*, "Stochastic Emission of Particles in Ultra-Relativistic Heavy Ion Collisions," Lund Univ. Preprint LUIP 9010 (1990), submitted to Modern Physics Letters A.

E. Ganssauge *et al.*, "Contribution of the EMU01-Collaboration to the research for a Quark Gluon Plasma (QGP)," Proc. XV Int. Conf. on Particle Tracks in Solids, Marburg, FRG, Sept. 3-7, 1990.

I. Otterlund *et al.*, "Limiting Fragmentation, Scaling and Substructural Dependence of Multiparticle Production in High-Energy Heavy-Ion Interactions," Physica Scripta T32, 168 (1990).

I. Otterlund *et al.*, "Multiplicity Fluctuations in High-Energy Heavy-Ion Interactions Observed in High-Angular Resolution Tracking Detectors," to appear in Proc. Santa Fe Workshop on Intermittency in High-Energy Collisions. Santa Fe, NM, March 1990.

I. Otterlund *et al.*, "Stochastic Emission and Non-Statistical Fluctuations in Relativistic Heavy-Ion Interactions," Proc. X Int. Seminar on High Energy Physics Problems--Relativistic Nuclear Physics and Quantum Chromodynamics,Dubna, Sept. 1990.

E. Stenlund et al., "Non-Statistical Fluctuations in Relativistic Heavy-Ion Collisions," Lund University Preprint LUIP 9008 (1990). To appear in Proc. CAMP-meeting, Marburg, FRG, May 1990.

E. Stenlund *et al.*, "Recent Results from EMU01," Lund University Preprint LUIP 9004 (1990). To appear in the Proc. HIPAGS Workshop, Brookhaven National Laboratory, Upton, NY, March 5-7, 1990.

M. I. Tretyakova *et al.*, "Central Interactions S + AgBr at 200 A GeV," Proc. X Int. Seminar on High Energy Physics Problems - Relativistic Nuclear Physics and Quantum Chromodynamics, Dubna, Sept. 1990.

J. Wilkes *et al.*, "Scaled Factorial Moment Analysis of 200 A GeV S + Au Interactions," to appear in Proc. Santa Fe Workshop on Intermittency in High-Energy Collisions. Santa Fe, New Mexico, March 1990.

"Scaled Factorial Moment Analysis of 200 A GeV Sulfur + Gold Interactions," R. J. Wilkes, *et al* (EMU-01 Collaboration), in *Proc. of the Santa Fe Workshop, Intermittency in High Energy Collisions, Los Alamos National Laboratory, Los Alamos, USA, March 18-21, 1990,* eds. F. Cooper, R. C. Hwa, I. Sarcevic, World Scientific, p. 145 (1991).

* "Stochastic Emission of Particles in Ultra-Relativistic Heavy-Ion Collisions, " M. I. Adamovich, *et al.* (EMU-01 Collaboration), *High Energy Physics and Nuclear Physics in China*, **15**, 131 (1991).

* "The Systematical Investigation of Intermittency in High Energy Heavy Ion Collisions," M. I. Adamovich, *et al.*(EMU-01 Collab.), *LUIP 9103,* to be published in *Phys. Lett. B.*

"Fluctuations and Correlations in 200*A* GeV A-A collisions," R. J. Wilkes, *et al.* (EMU-01 Collaboration), *Intersections between Particle and Nuclear Physics, Tucson, AZ 1991 (AIP Conf. Proc. 243)*, 816-818.

* "On the Systematic Behavior of the Intermittency-Indices in Nuclear Interactions," M. I. Adamovich, *et al.* (EMU-01 Collaboration) *Phys. Lett. B*, **263**(3,4), 539-543 (1991).

* Stochastic Emission of Particles in Ultra-Relativistic Heavy-Ion Collisions," M. I. Adamovich, *et al.* (EMU-01 Collaboration), *Modern Phys. Lett. A.* **6**(6), 469-478 (1991).

"Analysis of Fluctuations and Correlations in 200**A* GeV *A-A* Collisions," R. J. Wilkes, *et al.* (EMU-01 Collaboration), *Proc. 22nd International Cosmic Ray Conference (Dublin, 1991)*, **4**:21.

* "Energy, Target, Projectile and Multiplicity Dependencies of Intermittency Behavior in High Energy O(si,S) induced Interactions," M. I. Adamovich, *et al.* (EMU-01 Collaboration), *Z. Phys. C - Particles and Fields* **49**, 395-399 (1991).

* Multiplicities in ^{16}O-Induced Violent Heavy-Ion Collisions from *5A* to *2x10^5 A* MeV," M. I. Adamovich, *et al.* (EMU-01 Collab.), *Phys. Rev. Lett.* **67**(10), 1201-1205 (1991).

"Review of Recent Results on Particle Production from EMU-01," R. J. Wilkes and the EMU-012 Collaboration, *Nuclear Physics* **A544:153c**, (1992), (invited talk at Quark Matter '91, T. C. Awes, *et al.*, ed., North Holland, 1992).

* "A Systematic Investigation of Scaled Factorial Cumulant Moments for Nucleus-Nucleus Interactions," (EMU-01 Collaboration) M.I. Adamovich, *et al*, to be published in *Physical Review D*.

(* *Refereed papers.*)

866 Ahle, L. *et al.*, (E-802 Collaboration). Global transverse energy distributions in Si + Al, Au at 14.6*A* GeV/c and Au + Au at 11.6*A* GeV/c. Phys. Letts. **B 332**, 258-264 (1994).

868 "*Some preliminary results from the new 10.6 GeV/nucleon gold beam at Brookhaven*," C. Jake Waddington, Inter. J. of Mod. Phys. E, Vol. 2, No. 4, 739-766 (1993).

"*Fragmentation of high energy UH nuclei*," C. J. Waddington, M. L. Cherry, A. Dabrowska, P. Deiner-Jones, A. I. Dubinina, O. K. Egrov, R. Holynski, W. V. Jones, A. Jurak, E. D. Kolganova, E. A. Pazharova, K. Sengupta, T. Yu. Skorodko, V. A. Smirnitski, M. Szarska, J. P. Wefel, B. Wilczynska, and W. Wolter, 23rd Inter. Cosmic Ray Conf., Calgary, Canada, Vol. 2, p. 203-206 (1993).

"*Particle production and fragmentation processes in heavy ion interactions in emulsion*," R. Holynski, Nuclear Phys. A566, 191c-198c (1994).

"*Interactions of 10.6 GeV/nucleon gold nuclei in nuclear emulsions*," M. L. Cherry, J. A. Dabrowska, P. Deines-Jones, A. J. Dubinina, R. Holynski, W. V. Jones, A. Jurak, E. D. Kolganova, A. Olszweski, E. A. Pozharova, K. Sengupta, T. Yu, Skorodko, V. A. Smirnitski, M. Szarska, C. J. Waddington, J. P. Wefel, B. Wilczynska, W. Wolter, B. Wosiek, Zeitschrift fur Physik, **C62**, 25-29 (1994).

869 "*Energy dependence of the fragmentation of UH-nuclei*," L. Y. Geer, J. Klarmann, B. S. Nilsen, C. J. Waddington, W. R. Binns, J. R. Cummings, and T. L. Garrard, 23rd Int. Cosmic Ray Conf., Calgary, Canada, vol. 2, p. 191-194 (1993).

"*Interactions of 10.6 GeV/n gold nuclei in targets from* $_1H$ *to* $_{82}Pb$," C. J. Waddington, W. R. Binns, J. R. Cummings, T. L. Garrard, B. W. Gauld, L. Y. Geer, J. Klarmann, and B. S. Nilsen; Nucl. Phys. A**566**, 427c-430c (1994).

"*Some preliminary results from the new 10.6 GeV/nucleon gold beam at Brookhaven*," C. Jake Waddington, Inter. J. of Mod. Phys. E, Vol. 2, No. 4, 739-766 (1993).

"*Charge-pickup by heavy relativistic nuclei*," B. S. Nilsen, C. J. Waddington, W. R. Binns, J. R. Cummings, T. L. Garrard, L. Y. Geer, and J. Klarmann, in press, Phys. Rev. C.

874 C. Kormanyos *et al.* "Nuclear Response to Quasifree K^+ Scattering," Phys. Lett. **71**, 2571 (1993).

C. Kormanyos, Ph.D. Thesis.

875 Multiplicity distributions in high-energy heavy-ion collisions, A. Mukhopadhyay, P. L. Jain and G. Singh, Nuova Cim. **106A**, 967-978 (1993).

Fractal analysis of projectile fragments in nuclear collisions at 1-2A GeV, P. L. Jain, G. Singh and A. Mukhopadhyay, Nucl. Phys. **A561**, 651-659 (1993).

Multiplicity distributions in forward and backward hemispheres at high energy collisions, A. Mukhopadhyay, P. L. Jain, G. Singh, Nuova Cim. **A106**, 793-811 (1993).

Cluster formation in high energy collisions, A. Mukhopadhyay, G. Singh and P. L. Jain, J. Phys. G, **19**, 1137-1142 (1993).

Factoral moments and multifractal analysis at relativistic energies, P. L. Jain, G. Singh and A. Mukhopadhyay, Phys. Rev. **C48**, R517-R521 (1993).

Intermittency and fractals in nuclear collisions at 1.52A GeV, G. Singh, A. Mukhopadhyay and P. L. Jain, Z. Phys. **A345**, 305 (1993).

Multifragment disintegration of ^{238}U at 1A GeV, P. L. Jain and G. Singh, Phys. Rev. **C47**, 2382-2385 (1993).

Factoral moments and short range correlation at relativistic energies, P. L. Jain, A. Mukhopadhyay and G. Singh, Z. Phys. **C58**, 1 (1993).

Characteristics of He-nucleus interactions at relativistic energy, M. Golde, G. Singh, P. L. Jain, and A. Mukhopadhyay, Z. Phys. **A344**, 291 (1993).

Intermittency analysis in nuclear multifragmentation, G. Singh, P. L. Jain and M. S. El-Nagdy, Europhys. Lett. **21**, 527 (1993).

Intermittent behavior of nuclear multifragments, P. L. Jain, G. Singh and A. Mukhopadhyay, Phys. Rev. **C47**, 342 (1993).

Entropy and fractal characteristics of multiplicity production at relativistic heavy ion interactions, A. Mukhopadhyay, P. L. Jain and G. Singh, Phys. Rev. **C47**, 410 (1993).

Multifractal analysis of ^{197}Au-emulsion collisions at 10.6A GeV, G. Singh and P. L. Jain, accepted in Phys. Rev. **C** (1994).

Intermediate mass fragment emission by ^{197}Au projectile at relativistic energy in nuclear emulsion, P. L. Jain, G. Singh and A. Mukhopadhyay, Phys. Rev. **C**, August 1994.

Squeeze-out of pion emission in relativistic heavy-ion collisions, P. L. Jain and G. Singh, Mod. Phys. Lett. **A9**, 1445 (1994).

Production of helium fragments in ^{197}Au-emulsion collisions at 10.6A GeV, G. Singh and P. L. Jain, Z. Phys. **A4**, 99 (1994).

Collective flow by the azimuthal correlation of projectile fragments in relativistic heavy-ion collisions, G. Singh and P. L. Jain, Phys. Rev. **C49**, 3320 (1994).

877 Transverse Energy Production in Collisions with 11.4 A GeV/c Au and 14.6 A GeV/c Si Beams, The E877 Collaboration, Phys. Rev. Lett. (submitted Dec. 16, 1992).

A Measurement of Inclusive Photon Production at Low p_T in 10.8 A·GeV/c Au-Nucleus Central Collisions. Chuan-Ming Zou for the E877 Collaboration. Submitted to Quark Matter '95 Conference, Monterey, California, January 9-13, 1995.

881 S. J. Lindenbaum and R. S. Longacre. "Comments on "The OZI Rule Does Not Apply to Baryons." Phys. Letts. B, 234 (1990) 163-64.

882 Y. D. He and P. B. Price. "Measurement of cross section for charge pickup by 11.4 *A* GeV gold ions." Phys. Letts. B 298 (1993) 50-53.

Y. D. He and P. B. Price. "Search for abnormal-nucleus production in heavy-ion collisions." Phys. Rev. C 48, (1993) 647.

Y. D. He and P. B. Price. "Nuclear and electromagnetic fragmentation of 2.25-TeV ^{197}Au nuclei. Zeitschrift fur Physik A, C. Springer-Verlang 1994.

Andrew Westphal and Y. D. He. "Measurement of Cross Sections for Electron Capture and Stripping by Highly Relativistic Ions." Phys. Rev. Letts. 71 (1993) 1160-1163.

Y. D. He and P. B. Price. "First measurement of charge-changing cross sections for 11.4 A GeV ^{197}Au in various targets." Nuclear Physics A**566** (1994) 363c-366.

Y. D. He, Andrew J. Westphal and P. Buford Price. "Response of the BP-1 phosphate glass detector to relativistic heavy ions." Nucl. Instr. & Methods in Physics Research B 84 (1994) 67-76.

Andrew J. Westphal, Y. D. He and Patrick S. Wojdowski. "Apparent binary microscopic response to relativistic ions of a large class of track-etch detectors." Nucl. Instruments and Methods in Physics Research B 86 (1994) 317-324.

M. Drndic, Y. D. He, P. B Price, D. P. Snowden-Ifft and A. J. Westphal. "Atomic-force-microscopic study of etched nuclear tracks at extremely short distance scale." Nuclear Instruments and Methods in Physics Research B93 (1994) 52-56.

Y. D. He and M. Solarz. "Sensitivity of BP-1 glass detectors etched in methane-sulfonic acid." Nuclear Instruments and Methods in Physics Research B 94 (1994) 113-118.

885 Morgan May. "Doubly Strange Hypernuclei," presented at Future Directions in Particle and Nuclear Physics at Multi-GeV Hadron Beam Facilities, March 5, 1993.

K. Yamamoto and K. Imai. "E885 test measurement with SCIFI Detector and CH_2 target."

886 G. E. Diebold *et al.* "Production of $\pi^{\pm}$, $K^{\pm}$, p, and $\bar{p}$ in relativistic Au + Pt, Si + Pt, and p + Pt collisions," Phys. Rev. C, **48**, 2984 (1993).

A. Rusek et al. Search for Strangelets and Other Rare Objects in Au + Pt Collisions at the AGS Using a Fixed-Angle Focusing Spectrometer. HYP 94 contribution.

887 R. Sawafta, K. Baker, M. Barakat, S. Bart, R. E. Chrien, W. Franklin, T. Fukuda, K. Gross, R. S. Hayano, K. Hicks, E. V. Hungerford, B. Mays, R. Michael, T. Nagae, W. Naing, I. Omata, S. Wissink, Y. Shimizu, L. Q. Tang, I. J. Zhu. "Do Narrow Σ Hypernuclear States Exist?" Invited talk at the International Conference on Hypernuclear and Strange Particle Physics (HYP94), Vancouver, Canada, July 4-8, 1994.

List of AGS Experimenters begin here.

- *Name*
- *Affiliation*
- *Experiment(s)*

Listing of Experimenters

A

Abaev, V.	PNPI-Gatchina	909
Adamovich, M. I.	Lebedev Institute-Moscow	863
Adams, D. L.	Rice University	817
Adams, G.	Rensselaer Polytechnic Institute	852, 881
Adams, T.	University of Notre Dame	852
Adler, S.	Brookhaven National Laboratory	787
Aggarwal, M. M.	Panjab University, Chandigarh	863
Ahle, L.	Massachusetts Institute of Technology	866
Ahmad, S.	Rice University	817, 890
Ahmed, M.	University of Houston	907
Ahrens, L.	Brookhaven National Laboratory	880
Akiba, Y.	University of Tokyo (INS)	859, 866
Albergo, S.	INFN Catania	895
Alessi, J.	Brookhaven National Laboratory	880
Alexander, J.	State University of New York - Stony Brook	895
Alexandrov, Y. A.	Lebedev Institute-Moscow	863
Allen, C. A.	University of Texas at Austin	888
Alster, J.	Tel-Aviv University	850
Amaglobelli, N.	High Energy Physics Inst., Tibilsi State University	865
Amann, J. F.	Los Alamos National Laboratory	907
Ambrose, D.	University of Texas-Austin	871
Andreeva, N. P.	Institute of High Energy Physics, Alma Ata	863
Anzon, Z. V.	Institute of High Energy Physics, Alma Ata	863
Aoki, M.	TRIUMF	787
Appel, R.	Yale University	865
Archambeau, J.	Loma Linda University	856
Ardebili, M.	Princeton University	787
Arjeinejad, R.	Idahoe National Engineering Laboratory	877
Armendariz, J.	University of New Mexico	865
Armstrong, T.	Penn State University	864
Arora, R.	Panjab University, Chandigarh	863
Ashktorab, K.	Brookhaven National Laboratory	866
Atiya, M. S.	Brookhaven National Laboratory	787
Atoian, G. S.	Institute for Nuclear Research, Acad. of Sciences of Russia	865
Avetyan, F. A.	Physics Institute-Yerevan	863
Azuelos, G.	University of Montreal	889

B

Badyal, S. K.	University of Jammu	863
Bachman, M.	University of California-Irvine	871
Bagaturia, Y.	High Energy Physics Institute, Tibilsi State University	865
Baker, M.	Massachusetts Institute of Technology	866
Baker, K.	CEBAF and Hampton University	887
Baker, S.	University of Massachusetts-Dartmouth	850
Bakich, A. M.	University of Sydney	863
Barakat, M.	Yale University	887
Barbosa, F.	University of Massachusetts-Dartmouth	850
Barish, K.	Yale University	864
Barkov, L. M.	Budker Institute for Nuclear Physics	821
Barnes, P.	Carnegie-Mellon University	781
Barnes, P.	LAMPF	813, 836
Barrette, J.	McGill University	814, 877
Bart, S.	Brookhaven National Laboratory	781, 856, 874, 885, 887, 890, 905, 906, 907, 909
Barton, D. S.	Brookhaven National Laboratory	850
Bar-Yam, Z.	University of Massachusetts-Dartmouth	852
Basova, E. S.	Institute of Nuclear Physics-Tashkent	863
Bassalleck, B.	University of New Mexico	813, 836, 865, 885, 886, 906
Bassano, D.	SUNY Health Science Center	856
Batinić, M.	Rudjer Boskovic Institute	890
Bauer, D.	University of California-Santa Barbara	889
Bazarov, I. K.	Institute of Nuclear Physics-Tashkent	863
Beavis, D.	Brookhaven National Laboratory	844, 859, 866, 878, 886
Beddo, M.	Argonne National Laboratory	880
Beery, P.	University of California-Riverside	859
Bekrenev, V.	PNPI-Gatchina	909
Belkacem, A.	Lawrence Berkeley Laboratory	892
Bellwied, R.	Wayne State University	814, 864, 877, 896
Belz, J.	Temple University	888
Benante, J.	Brookhaven National Laboratory	821
Benedict, E.	Boston University	821
Bennett, B.	Wayne State University	864
Bennett, G.	Brookhaven National Laboratory	821, 856
Bennett, M.	Yale University	864, 878
Bennett, S.	Wayne State University	814
Bennhold, C.	George Washington University	909
Berdoz, A.	Carnegie-Mellon University	813, 836, 907
Bergman, D.	Yale University	865
Bersch, R.	State University of New York-Stony Brook	877
Betarbet, S.	University of Pittsburgh	884
Beveridge, J.	TRIUMF	889
Bhalla, K. B.	University of Rajasthan-Jaipur	863
Bharadwaj, V.	Fermilab	880
Bhasin, A.	University of Jammu	863
Bhatia, V. S.	Panjab University, Chandigarh	863

Binns, W. R.	Washington University	869
Birchall, J.	University of Manitoba	906
Bishop, J. M.	University of Notre Dame	852
Blackmore, E. W.	TRIUMF	787
Bodyagin, V. A.	Moscow State University	852
Bogdanov, V. G.	Khlopin Radium Institute-St. Petersburg	863
Bonner, B. E.	Rice University	817, 891
Boudrie, R. L.	Los Alamos National Laboratory	907
Brabson, B. B.	Indiana University	852
Brady, P.	University of California-Davis	895
Braun-Munzinger, P.	State University of New York-Stony Brook	814, 877
Breuer, H.	University of Maryland	900
Brill, A. B.	University of Massachusetts	856
Briscoe, W.	George Washington University	890, 909
Britt, H. C.	Lawrence Livermore Laboratory	859, 866
Brown, D. S.	Northwestern University	852
Brown, D. H.	Boston University	821
Brown, H. N.	Brookhaven National Laboratory	821
Bryman, D. A.	TRIUMF	787
Bubnov, V. I.	Institute of High Energy Physics, Alma Ata	863
Budick, B.	New York University	781, 859
Budney, T.	Wayne State University	877
Buchanan, J. A.	Rice University	817, 891
Buerger, T.	Freiburg University	813, 836
Bunce, G. M.	Brookhaven National Laboratory	821, 850, 880
Burger, M.	Freiburg University	813, 836, 886, 886
Bürger, T.	Freiburg University	886
Burnett, T. H.	University of Washington	863

C

Cai, X.	Hua-Zhong Normal University-Wuhan	863
Caldwell, D.	University of California-Santa Barbara	889
Carey, R. M.	Boston University	821
Carroll, A. S.	Brookhaven National Laboratory	850
Carroll, J.	University of California-Los Angeles	878
Carshiev, D. A.	Institute of Nuclear Physics-Tashkent	863
Cason, N. M.	University of Notre Dame	852
Caussyn, D.	Indiana University IUCF	880
Cebra, D. A.	University of California-Davis	895
Chacon, A. D.	Texas A&M University	895
Chan, C. S.	City College of New York	881, 891
Chan, X.	Shanxi Normal-Linfen	863
Chang, J.	University of California-Riverside	866
Chapman, M.	University of New Mexico	813, 836
Chasman, C.	Brookhaven National Laboratory	859, 866
Chasnicov, I. Y.	Institute of High Energy Physics, Alma Ata	863
Chen, Z.	Brookhaven National Laboratory	859, 866
Chernova, L. P.	Physical-Technical Institute-Tashkent	863

Chernyavski, M. M.	Lebedev Institute-Moscow	863
Cherry, M. L.	Louisiana State University	868
Chi, C. Y.	Columbia University	859, 866
Chiang, I-H.	Brookhaven National Laboratory	787, 889
Chiba, J.	National Laboratory for High Energy Physics-KEK	878
Chrien, R. E.	Brookhaven National Laboratory	781, 813, 836, 856, 874, 885, 886, 887, 890, 905, 906, 907, 909
Christensen, N.	University of Aukland	850
Christie, W.	Johns Hopkins University	896
Chu, Y. Y.	Brookhaven National Laboratory	859, 866
Chung, S. U.	Brookhaven National Laboratory	817, 852
Cianciola, V.	Massachusetts Institute of Technology	859, 866
Clajus, M. J.	University of California-Los Angeles	890, 909
Cleland, W.	University of Pittsburgh	814, 877, 884
Clemen, M.	University of Pittsburgh	877
Clement, J. M.	Rice University	817, 891
Cole, B.	Columbia University	859, 866, 877
Connor, D.	University of California-Irvine	871
Convery, M.	Princeton University	787
Corcoran, M. D.	Rice University	817
Cormier, T.	Wayne State University	814, 864, 877
Costa, S.	University of Catania	896
Costales, J. B	Lawrence Livermore Laboratory	859
Courant, E. D.	Brookhaven National Laboratory	880
Courant, H.	University of Minnesota	850
Cousins, R. D.	University of California-Los Angeles	888
Crittenden, R. R.	Indiana University	852
Crawford, H. J.	University of California Space Sciences Laboratory	859, 878, 896
Crowe, K.	University of California-Berkeley	896
Cullen, J. R.	Brookhaven National Laboratory	821
Cumming, J. B.	Brookhaven National Laboratory	844, 859, 862, 866
Cummings, J. R.	Caltec	869
Cushman, P.	University of Minnesota	821

D

Dai, Y.	McGill University	877
Dambrowska, A.	Institute of Nuclear Physics-Krakow	868
Danby, G. T.	Brookhaven National Laboratory	821
Dardenne, Y.	University of California Space Sciences Laboratory	878, 896
DaSilva, N.	University of São Paulo	814, 877
David, G.	State University of New York-Stony Brook	814, 877
Davis, C.	University of Manitoba	813, 836, 885, 906
Davis, C. L.	University of Louisville	852
Davis, M. R.	Virginia State University	876
Davis, R. M.	Purdue University	864
de Barros, S.	Federal University of Rio de Janeiro	899
DeCecco, P.	University of California-Irvine	871
Debbe, R.	Brookhaven National Laboratory	859, 866, 877, 896

Debevec, P.	University of Illinois	821
Dee, J.	State University of New York-Stony Brook	814
Dehnhard, D.	University of Minnesota	907
Denisov, S.	Institute for High Energy Physics-Protvino	852
Depommier, P.	University of Montreal	889
Deutsch, M.	Massachusetts Institute of Technology	781
Dhawan, S.	Yale University	865
Dhawan, S. K.	Yale University	821
Diebold, G.	Yale University	813, 836, 864, 886
Dienes-Jones. P.	Louisiana State University	868
Dieterle, B.	University of New Mexico	889
Dietzsch, O.	University of São Paulo	814, 877
Disco, A. A.	Yale University	821
Diwan, M.	Brookhaven National Laboratory	787, 889
Diwan, M. V.	Stanford University	888
Djordjadze, W.	Paul Scherrer Institute	865
Do, H.	Yale University	865
Doke, T.	University of Waseda	878
Dou, L.	Wayne State University	896
Dover, C. B.	Brookhaven National Laboratory	864
Dowd, J.	University of Massachusetts-Dartmouth	852
Dreute, J.	University of Siegen	883
Drigert, M.	Idaho National Engineering Laboratory	877
Dubinina, A. I.	Institute of Theory and Experimental Physics-Moscow	868
Durant, S.	Pennsylvania State University	850
Dushkin, A.	Institute for High Energy Physics-Protvino	852
Dzierba, A. R.	Indiana University	852

E

Eckhause, M.	College of William and Mary	871, 888
Ecklund, K.	Stanford University	871, 888
Efendiev, A.	Joint Institute for Nuclear Research-Dubna	909
Efstathiadis, E.	City College of New York	891
Egger, J.	Paul Scherrer Institute	865
Egorov, O. K.	Institute of Theory and Experimental Physics-Moscow	868
Eilerts, S.	University of New Mexico	865
Eiseman, S. E.	Brookhaven National Laboratory	891
Eldredge, W.	University of California-Riverside	866
Eligbaeva, G. Z.	Institute of High Energy Physics-Alma Ata	863
Endo, K.	National Laboratory for High Energy Physics-KEK	821
Engelage, J.	University of California Space Sciences Laboratory	859, 878, 896
Enyo, H.	University of Kyoto	813, 836, 886
Eremenko, L. E.	Institute of High Energy Physics-Alma Ata	863
Espy, M.	University of Minnesota	907
Etkin, A.	Brookhaven National Laboratory	891, 896
Eugenio, P.	University of Massachusetts-Dartmouth	852
Ewell, L.	Iowa State University	862, 864

F

Farley, F. J. M.	Yale University	821
Fatyga, M.	Brookhaven National Laboratory	814
Fazely, A.	Southern University and A & M College	889
Fei, X.	Yale University	821
Feinberg, B.	Lawrence Berkeley Laboratory	892
Felder, C.	University of Pittsburgh	865
Fickinger, W.	Case Western University	856
Fischer, H.	Freiburg University	813, 836
Fischer, H.	University of New Mexico	906, 865
Fitch, V. L.	Princeton University	888
Flores, I.	Lawrence Berkeley Laboratory	878
Foley, K. J.	Brookhaven National Laboratory	890
Fox, D.	Los Alamos National Laboratory	814
Frank, J. S.	Brookhaven National Laboratory	787, 889
Franklin, G.	Carnegie-Mellon University	813, 836, 885, 886, 906, 907
Franklin W.	Indiana University	887
Franz, J.	Freiburg University	813, 836, 886
French, A.	Wayne State University	877
Fukuda, T.	INS-Tokyo	887, 905, 906
Fung, S.-Y.	University of California-Riverside	859, 866
Furic, M.	University of Zagreb	907

G

Gaitinov, A. S.	Institute of High Energy Physics-Alma Ata	863
Gan, L.	University of Manitoba	813, 836, 906
Gang, F.	Wayne State University	877
Ganssauge, E. R.	Phillips University-Marburg	863
Garcia, E.	University of Maryland	866
Gardner, C.	Brookhaven National Laboratory	821
Garino, G.	University of Illinois	821
Garpman, S.	University of Lund	863
Garrard, T. L.	Caltech	869
Gasser, J.	University of Bern	865
Geer, T. L.	Washington University	869
Geller, J.	Brookhaven National Laboratory	821
Gerassimov, S. G.	Lebedev Institute-Moscow	863
Germani, J.	Yale University	864
Gilbert, S.	McGill University	814
Giles, B.	University of Pittsburgh	865
Gilkes, M.	State University of New York-Stony Brook	895
Gill, D.	TRIUMF	813, 836, 885, 906
Glass, G.	University of Texas-Austin	907
Gninenkoy, S. N.	Institute for Nuclear Research, Acad. of Sciences of Russia	865
Gong, W.	Lawrence Berkeley Laboratory	895
Gonin, M.	Brookhaven National Laboratory	859, 866
Gould, H.	Lawrence Berkeley Laboratory	892

Graessle, S.	University of Texas-Austin	871
Graf, C.	Phillips University-Marburg	863
Green, M. A.	Lawrence Berkeley Laboratory/BNL	821
Greene, S. J.	Los Alamos National Laboratory	907
Greene, S. V.	Yale University	814
Greer, A.	College of William and Mary	876
Greiner, L.	Lawrence Berkeley Laboratory	896
Greiner, L.	University of California Space Science Laboratory	877, 896
Gribushin, A. M.	Moscow State University	852
Grigoriev, D. N.	Budker Institute for Nuclear Physics	821
Grosnick, D.	Argonne National Laboratory	880
Gross, K.	University of Houston	887
Grote, J. G.	University of Washington	863
Gulamov, K. G.	Physical-Technical Institute-Tashkent	863
Gumplinger, P.	TRIUMF	889
Gunter, J.	Indiana University	852
Gupta, S. K.	University of Rajasthan-Jaipur	863
Gupta, V. K.	University of Jammu	863
Gushue, S.	Brookhaven National Laboratory	850, 859, 866

H

Haeberlen, U.	Max Planck Institute fur Med. Forschung, Heidelberg	821
Hackenburg, R. W.	Brookhaven National Laboratory	852, 881, 890
Hafen, E. S.	Massachusetts Institute of Technology	864
Haggerty, J. S.	Brookhaven National Laboratory	787
Hall, J.	Wayne State University	814, 864, 877, 896
Hall, J.	University of New Mexico	886
Hallman, T.	Johns Hopkins University	817
Hallman, T.	University of California-Los Angeles	896
Hamagaki, H.	University of Tokyo (INS)	859, 866
Hamilton, S.	University of Texas-Austin	871
Hanabata, M.	Gifu University	906
Hancock, A. D.	College of William and Mary	871, 888
Hansen, O.	Brookhaven National Laboratory	859
Haridas, P.	Massachusetts Institute of Technology	864
Harris, P.	University of Illinois	821
Harshman, D. R.	AT & T Bell Laboratories	849
Hartman, C.	Stanford University	871
Haustein, P. E.	Brookhaven National Laboratory	844
Hayano, R.	University of Tokyo	859, 866, 877, 887, 905
Hayashi, S.	Brookhaven National Laboratory	859
Hayashi, S.	University of Tsukuba	866
Hazen, E. S.	Boston University	821
He, Y.	University of California-Berkeley	882
Hebert, M.	Stanford University	871
Heckman, H.	Lawrence Berkeley Laboratory	878
Heilbronn, L.	Lawrence Berkeley Laboratory	895
Heinrich, W.	University of Siegen	883

Heintzelman, G.	Massachusetts Institute of Technology	866
Helmer, R.	TRIUMF	889
Hemmick, T.	State University of New York-Stony Brook	814, 877
Heppelmann, S.	Pennsylvania State University	850
Herold, W. D.	Paul Scherrer Institute	865
Herrmann, N.	GSI, Darmstadt	814, 877
Hertzog, D.	University of Illinois	821
Hicks, K.	Ohio University	874, 887, 905
Highland, V. L.	Temple University	888, 889
Hill, J.	University of Pennsylvania	889
Hill, J. C.	Iowa State University	862, 864, 892
Hirabayashi, H.	National Laboratory for High Energy Physics-KEK	821
Hiramatsu, S.	National Laboratory for High Energy Physics-KEK	880
Hirsch, A. S.	Purdue University	864, 895
Hjort, E.	Purdue University	895
Hoff, C.	College of William and Mary	871, 888
Hoffmann, G. W.	University of Texas-Austin	871, 888, 895, 896
Holynski, R.	Institute of Nuclear Physics-Krakow	868
Homma, S.	University of Tokyo (INS)	859, 866
Hong, B.	State University of New York-Stony Brook	814, 877
Hseuh, H-C.	Brookhaven National Laboratory	821
Hseuh, S.	Fermilab	880
Hu, Z. R.	Hua-Zhong Normal University-Wuhan	863
Huang, H.	Indiana University IUFC	880
Huang, H. Z.	Purdue University	864
Hughes, V. W.	Yale University	821
Hungerford, E. V.	University of Houston	781, 874, 887, 905, 907

I

Ichii, S.	National Laboratory for High Energy Physics-KEK	821
Igo, G.	University of California-Los Angeles	878
Iijima, T.	University of Kyoto	813, 836, 885, 886
Imai, K.	University of Kyoto	813, 836, 886, 906
Imlay, R. L.	Louisiana State University	889
Inagaki, T.	National Laboratory for High Energy Physics-KEK	787
Ino, K.	INS-Tokyo	787
Insolia, A.	INFN-Catania	895
Irwin, G. M.	Stanford University	871, 888
Issakov, V. V.	Institute for Nuclear Research, Acad. of Sciences of Russia	865
Isenhower, L. D.	Aibilene Christian University	909
Ishida, K.	University of Riken	821
Ismail, A. Z. M.	State University of New York-Buffalo	875
Ito, M. M.	Princeton University	787

J

Jackson, J. W.	Brookhaven National Laboratory	821
Jain, P. L.	State University of New York-Buffalo	875

Jakobsson, B.	University of Lund	863
Jayananda, K.	University of Pittsburgh	814
Jia, L.	Brookhaven National Laboratory	821
Johns, K. A.	University of Arizona	817
Johnson, B.	Brookhaven National Laboratory	892
Johnson, S.	State University of New York-Stony Brook	877
Johnston, K.	Louisiana Technical University	889, 907
Jones, T.	University of Illinois	821
Jones, W. V.	Louisiana State University	868
Judd, E.	Massachusetts Institute of Technology	866
Jungmann, K.	University of Heidelberg	821
Jurak, A.	Institute of Nuclear Physics-Krakow	868
Just, L.	Šafarik University	863
Justice, M.	Kent State University	895

K

Kabe, S.	National Laboratory for High Energy Physics-KEK	787
Kachroo, S.	University of Jammu	863
Kalogeropoulos, T.	Syracuse University	856
Kalyachkina, G. S.	Institute of High Energy Physics-Alma Ata	863
Kane, J. R.	College of William and Mary	871, 888
Kaneko, H.	Kyoto University	859, 866
Kanematsu, N.	University of California-Irvine	871
Kang, J.	University of California-Riverside	859
Kang, J.	Yonsei University	866
Kanygina, E. K.	Institute of High Energy Physics-Alma Ata	863
Karabova, M.	Šafarik University	863
Kashiwagi, T.	University of Waseda	878
Kaspar, H.	Paul Scherrer Institute	865
Kaufman, S.	Argonne National Laboratory	859, 866
Keane, D.	Kent State University	895
Kehoe, W. L.	Massachusetts Institute of Technology	859
Kern, B.	Indiana University	852
Kern, W.	University of Massachusetts-Dartmouth	852
Kettell, S.	Brookhaven National Laboratory	787
Kettell, S. H.	Temple University	888
Khan, H. A.	PINSTECH	899
Khan, N. A.	PINSTECH	899
Kharlamov, S. P.	Lebedev Institute-Moscow	863
Khazin, B. I.	Budker Institute for Nuclear Physics	821
Kikuchi, J. H.	University of Waseda	878
Kim, B.	Wayne State University	877
King, E.	University of Massachusetts-Dartmouth	852
Kinoshita, T.	Cornell University	821
Kitching, P.	TRIUMF	787
Kitro, S.	University of Jammu	863
Klarmann, J.	Washington University	869
Klein, J.	Princeton University	888

Kmit, M.	Brookhaven National Laboratory	850
Kobayashi, M.	National Laboratory for High Energy Physics-KEK	787
Kochetov, V.	Institute for High Energy Physics-Protvino	852
Kodolova, O. L.	Moscow State University	852
Koehler, A.	Harvard Cyclotron Laboratory	856
Koetke, D. D.	Valparaiso University	889
Kolganova, E. D.	Institute of Theory and Experimental Physics-Moscow	868
Komatsubara, T.	INS-Tokyo	787
Konaka, A.	TRIUMF	787
Kormanyos, C.	University of Colorado	874
Korotkich, V.	Moscow State University	852
Korteling, R.	Simon Fraser University	900
Koslenko, N.	PNPI-Gatchina	909
Kossler, W. J.	College of William and Mary	876
Kostin, M. A.	Moscow State University	852
Kramer, M. A.	City College of New York	881, 891
Krasnov, S. A.	Joint Institute for Nuclear Research-Dubna	863
Krauss, D.	University of Pittsburgh	814
Krauss, D. E.	University of Pittsburgh	865
Krienen, F.	Boston University	821
Kruglov, S.	PNPI-Gatchina	909
Kuang, Y.	College of William and Mary	871, 888
Kumagai, A.	University of Tsukuba	866
Kumar, B. Shiva	Yale University	814, 864, 878
Kumar, V.	University of Rajasthan-Jaipur	863
Kuno, Y.	National Laboratory for High Energy Physics-KEK	787
Kurakawa, S.	National Laboratory for High Energy Physics-KEK	821
Kureav, E. A.	Budker Institute for Nuclear Physics	821
Kurepin, A. B.	Institute for Nuclear Research-Moscow	907
Kurita, K.	University of Tsukuba	859
Kwiatkowski, K.	Indiana University	900
Kwon, Y.	State University of New York-Stony Brook	877
Kycia, T. F.	Brookhaven National Laboratory	787

L

Lacasse, R.	McGill University	814, 877
Lacey, R.	State University of New York-Stony Brook	895
Lahab, K.	Wayne State University	877
Lajoie, J.	Yale University	864
Lan, K.	University of Houston	907
Landry, M.	University of Manitoba	813, 836
Lang, K.	University of Texas-Austin	871, 888
Lankford, W. F.	George Mason University	876
Larionova, V. G.	Lebedev Institute-Moscow	863
Larsen, R.	Brookhaven National Laboratory	821
Lazarus, D.	Brookhaven National Laboratory	865
Lebedev, V.	High Energy Physics Institute, Tibilsi State University	865
Ledoux, R. J.	Massachusetts Institute of Technology	859

Lee, J. H.	Brookhaven National Laboratory	866
Lee, L.	University of Manitoba	813, 836, 906
Lee, R.	University of California-Irvine	871
Lee, S. Y.	Indiana University IUCF	880
Lee, Y. Y.	Brookhaven National Laboratory	821, 880
Legrain, R.	CEA Saclay	900
Leipuner, L.	Brookhaven National Laboratory	865
Leitch, M. J.	Los Alamos National Laboratory	890
LeVine, M.	Brookhaven National Laboratory	859, 866
Lewis, R. A.	Penn State University	864
Li, D.	Indiana University IUCF	880
Li, K. K.	Brookhaven National Laboratory	787
Li, Q.	Wayne State University	814, 877
Li, Y. D.	Hua-Zhong Normal University-Wuhan	863
Li, Y. X.	Hunan Ed. Institute-Changsha	863
Liang, L.	Hunan Ed. Institute-Changsha	863
Libby, B.	Iowa State University	862, 864, 892
Lindenbaum, S. J.	Brookhaven Nat. Lab. and City College of New York	881, 891
Lindenbusch, R.	Indiana University	852
Lindstrom, P. J.	Lawrence Berkeley Laboratory	878, 896
Lissauer, D.	Brookhaven National Laboratory	814
Littenberg, L. S.	Brookhaven National Laboratory	787
Liu, H.	University of California-Riverside	866
Liu, H.	Kent State University	895
Liu, L. S.	Hua-Zhong Normal University-Wuhan	863
Liu, Z.	Boston University	821
Liu, Z. G.	Hunan Ed. Institute-Changsha	863
Llope, W.	State University of New York-Stony Brook	814
Lokanathan, S.	University of Rajasthan-Jaipur	863
Longacre, R. S.	Brookhaven National Laboratory	881, 890
Lopiano, D.	Argonne National Laboratory	880
Lord, J. J.	University of Washington	863
LoSecco, J.	University of Notre Dame	852
Love, W. A.	Brookhaven National Laboratory	891
Loveland, W.	Oregon State University	844
Lowder, D. M.	University of California-Berkeley	882
Lowe, J.	University of Birmingham	813, 836
Lowe, J.	University of New Mexico	865, 885, 886, 906
Lowenstein, D. I.	Brookhaven National Laboratory	850
Lozano, J.	University of Connecticut	865
Lu, A.	University of California-Santa Barbara	889
Lu, Y. L.	Hua-Zhong Normal University-Wuhan	863
Luccio, A.	Brookhaven National Laboratory	880
Ludlam, T.	Brookhaven National Laboratory	814, 877
Lukicheva, N. S.	Physical-Technical Institute-Tashkent	863
Lukaszew, A.	Wayne State University	814
Luke, G.	Columbia University	876
Luke, J.	Lawrence Livermore Laboratory	866
Luo, S. B.	Shanxi Normal-Linfen	863

Lynch, W. G.	Michigan State University	900
Lysenko, W. P.	Los Alamos National Laboratory	821

M

Ma, H.	Brookhaven National Laboratory	865
Macdonald, J. A.	TRIUMF	813
Madansky, L.	Johns Hopkins University	817, 896
Magahiz, R.	Carnegie-Mellon University	787, 836, 885, 886, 907
Magurno, B.	Brookhaven National Laboratory	865
Mainweiler, R. W.	Valparaiso University	889
Majid, W.	Yale University	865
Majka, R.	Yale University	814, 864
Makdisi, Y. I.	Brookhaven National Laboratory	850, 880
Manak, J.	University of Notre Dame	852
Mangora, L. K.	University of Jammu	863
Manglos, S.	SUNY Health Science Center	856
Mann, A. K.	University of Pennsylvania	889
Marcin, M. R.	University of Texas-Austin	871, 888
Mark, S. K.	McGill University	814, 877
Mardor, I.	Tel-Aviv University	850
Mardor, Y.	Tel-Aviv University	850
Marlow, D. R.	Princeton University	787
Martel, D.	University of Massachusetts-Dartmouth	850
Marušić, A.	Rudjer Boskovic Institute	890, 909
Marx, J.	University of California-Berkeley	891
Marx, J.	Lawrence Berkeley Laboratory	896
Masaike, A.	Kyoto University	886
Marshak, M. L.	University of Minnesota	850
Martin, R. D.	College of William and Mary	871, 888
Marutyan, N. A.	Physics Institute-Yerevan	863
Mashata, K.	National Laboratory for High Energy Physics-KEK	821
Maslennikova, N. V.	Lebedev Institute-Moscow	863
Matheus, R.	Wayne State University	814
Matsik, S.	University of Pittsburgh	884
May, M.	Brookhaven National Laboratory	781, 885, 888, 906, 907
Mayes, B.	University of Houston	781, 874, 907
Mazavia, D.	High Energy Physics Institute, Tibilsi State University	865
McCorkle, S.	Brookhaven National Laboratory	814, 877
McCrady, R.	Carnegie-Mellon University	813, 836
McDonald, S.	University of California-Los Angeles	890, 909
McDonough, J.	University of Texas-Austin	871, 888
McGrath, R.	State University of New York-Stony Brook	899, 895
McKerley, M.	Indiana University	852
McPherson, R.	Princeton University	787
Meier, R.	Brookhaven National Laboratory	821
Meng, W.-Z.	Brookhaven National Laboratory	821
Menzel, W.	University of Basel	865
Merrill, F.	Carnegie-Mellon University	813, 836, 885, 886

Metcalf, W.	Louisiana State University	889
Meyer, C.	Carnegie-Mellon University	836, 906, 907
Meyerhof, W.	Stanford University	892
Meyers, P. D.	Princeton University	787
Miake, Y.	University of Tsukuba	859, 866
Michael, R.	Ohio University	874, 887
Miettinen, H. E.	Rice University	817
Mignerey, A.	University of Maryland	866
Mihara, S.	Kyoto University	886
Mildenberger, J.	TRIUMF	787
Milder, A.	University of Texas-Austin	871
Miller, J.	Lawrence Berkeley Laboratory	895
Miller, J. P.	Boston University	821
Mills, A. P.	A T & T Bell Laboratories	849
Minor, E.	Pennsylvania State University	850
Miskowiec, D.	State University of New Yor-Stony Brook	877
Mitchell, J.	Yale University	814
Mitchell, J.	University Space Research Association	878, 896
Mittra, I. S.	Panjab University-Chandigarh	863
Mizumachi, Y.	National Laboratory for High Energy Physics-KEK	821
Moffet, B.	University of Montreal	889
Molzon, W. R.	University of California-Irvine	871, 888
Mookerjee, S.	University of Rajasthan-Jaipur	863
Moore, C. F.	University of Texas-Austin	889, 895, 907
Moore, F.	University of Texas-Austin	896
Mordechai, S.	University of Texas-Austin/Ben-Gurion University	889, 907
Mori, Y.	National Laboratory for High Energy Physics-KEK	880
Moriwaki, T.	University of California-Los Angeles	909
Morris, C. L.	Los Alamos National Laboratory	907
Morrison, D.	Massachusetts Institute of Technology	859, 866
Morrison, T. W.	George Washington University	890, 909
Morse, R. J.	Massachusetts Institute of Technology	859
Morse, W. M.	Brookhaven National Laboratory	821
Moskowitz, B.	Brookhaven National Laboratory	859, 866
Moulson, M.	Columbia University	866
Mukhopadhyay, A.	State University of New York-Buffalo	875
Murtagh, M.	Brookhaven National Laboratory	889
Musulmanbekov, J. J.	Joint Institute for Nuclear Research-Dubna	863
Mutchler, G. S.	Rice University	817, 891

N

Nagae, T.	INS-Tokyo	887, 905, 906
Nagamine, K.	University of Tokyo	821
Nagamiya, S.	Columbia University	896
Nagle, J.	Yale University	864, 878
Naing, W.	CEBAF and Hampton University	887
Nakano, J.	INS-Tokyo	906
Nakano, T.	TRIUMF	787

Nakazawa, K.	Gifu University	906
Namboordiri, N.	Lawrence Livermore Laboratory	859, 866
Napolitano, J.	Rensselaer Polytechnic Institute	852
Nasyrov, S. Z.	Institute of Nuclear Physics-Tashkent	863
Navotny, V. S.	Physical-Technical Institute-Tashkent	863
Nagamiya, S.	Columbia University	859, 866, 878
Nayak, T.	Columbia University	859, 866
Nefkens, B. M. K.	University of California-Los Angeles	890, 909
Nelson, J.	University of Birmingham	813, 836, 886
Nguyen, C. T.	University of Texas at Austin	888
Nicholson, H.	Mt. Holyoke College	850
Nilsen, B. S.	University of Minnesota	869
Normand, L.	McGill University	877
Nozar, M.	Rensselaer Polytechnic Institute	852
Numao, T.	TRIUMF	787
Nystrand, J.	University of Lund	863

O

O'Brien, E.	Brookhaven National Laboratory	814, 877
Ochs, M.	Phillips University-Marburg	863
O'Donnell, J. M.	University of Minnesota	907
Ogilvie, C.	Massachusetts Institute of Technology	866
Okada, K.	University of Kyoto	813, 836, 886, 906
Okumo, H.	INS-Tokyo	787
Olchanski, K.	Brookhaven National Laboratory	852
Olness, J.	Brookhaven National Laboratory	859, 866
Olson, D.	Lawrence Berkeley Laboratory	895
Olszewski, A.	Institute of Nuclear Physics	868
Omata, K.	INS-University of Tokyo	906
Orlov, Y.	Cornell University	821
Orlova, G. I.	Lebedev Institute-Moscow	863
Ostrovidov, A.	Moscow State University	852
Otterlund, I.	University of Lund	863
Ouimette, D. A.	Stanford University	888
Outa, H.	INS-Tokyo	887, 905
Ouyang, J.	Boston University	821

P

Pacradouni, V.	TRIUMF	787
Padley, P.	TRIUMF	787
Page, S.	University of Manitoba	813, 836, 885, 906
Pai, C.	Brookhaven National Laboratory	821
Panitkin, S.	State University of New York-Stony Brook	877
Papandreou, Z.	George Washington University	909
Partlan, M.	University of California-Davis	895
Parsons, C. G.	Massachusetts Institute of Technology	859
Paul, P.	State University of New York-Stony Brook	877

Peak, L. S.	University of Sydney	863
Pedlar, T.	Northwestern University	852
Peilert, G.	Lawrence Livermore Laboratory	895
Peng, J. C.	Los Alamos National Laboratory	890, 907
Perera, A. G. U.	University of Pittsburgh	884
Peresadko, N. G.	Lebedev Institute-Moscow	863
Peterson, R. J.	University of Colorado	874, 899, 907
Petrov, N. V.	Institute of Nuclear Physics-Tashkent	863
Philips, S.	George Washington University	909
Piasetzky, E.	Tel-Aviv University	850
Piazza, T.	State University of New York-Stony Brook	877
Pinsky, L.	University of Houston	781, 874, 907
Pile, P. H.	Brookhaven National Laboratory	787, 813, 836, 885, 886, 906, 907
Pislak, S.	University of Zurich	865
Platner, E. D.	Brookhaven National Laboratory	891, 896
Pless, I.	Massachusetts Institute of Technology	864
Plyuschev, V. A.	Khlopin Radium Institute-St. Petersburg	863
Poblaguev, A. A.	Institute for Nuclear Research, Acad. of Sciences of Russia	865
Polender, R.	Northwestern University	852
Polk, I.	Brookhaven National Laboratory	821
Pollaco, E. C.	CEA Saclay	900
Pommot-Maia, M.	Stanford University	871
Pope, J. K.	Yale University	864, 878
Porile, N. T.	Purdue University	864, 895
Postoev, V.	Institute for Nuclear Research, Acad. of Sciences of Russia	865
Potenza, R.	INFN-Catania	895
Potenza, R.	University of Catania	896
Poutissou, J. M.	TRIUMF	889
Poutissou, R.	TRIUMF	787
Pozharova, E. A.	Institute of Theory and Experimental Physics-Moscow	868
Prasad, S. C.	SUNY Health Science Center	856
Pratt, R.	George Washington University	909
Price, P. B.	University of California-Berkeley	882, 890
Prigl, R.	University of Heidelberg	821
Prodell, A.	Brookhaven National Laboratory	821
Prohvatilov, M.	INR-Russia	906
Prokop, J.	George Washington University	909
Proskujakov, A.	High Energy Physics Institute, Tibilsi State University	865
Proskuryakov, A. S.	Moscow State University	852
Pruneau, C.	Wayne State University	814, 864, 877

Q

Qin, Y. M.	Shanxi Normal-Linfen	863
Quian, W. Y.	Hua-Zhong Normal University-Wuhan	863
Quinn, B.	Carnegie-Mellon University	813, 836, 885, 886, 906, 907

R

Rabin, M. S. Z.	University of Massachusetts	864
Rai, G.	Lawrence Berkeley Laboratory	895
Ramsay, D.	University of Manitoba	813, 836, 885, 906
Raniwala, R.	University of Rajasthan-Jaipur	863
Raniwala, S.	University of Rajasthan-Jaipur	863
Rankowitz, S.	Brookhaven National Laboratory	821
Ransome, R. D.	Rutgers University	906177
Rao, M.	State University of New York-Stony Brook	814
Rao, N. K.	University of Jammu	863
Rasin, V.	INR-Russia	906
Rasmussen, J.	Lawrence Berkeley Laboratory	895
Ratner, L. G.	Brookhaven National Laboratory	880
Redin, S. I.	Yale University	821
Redlinger, G.	TRIUMF	787
Reece, K.	Brookhaven National Laboratory	880
Reed, J.	Syracuse University	856
Reeder, R.	University of New Mexico	889
Rehak, P.	Brookhaven National Laboratory	865
Remsberg, L. P.	Brookhaven National Laboratory	859, 866, 900
Riley, P. J.	University of Texas-Austin	871, 888, 896
Ritchie, J. L.	University of Texas-Austin	871, 888
Ritter, H. G.	Lawrence Berkeley Laboratory	895
Roberts, B. L.	Boston University	821
Roberts, J. B.	Rice University	817
Robinson, D. K.	Case Western Reserve University	856
Robmann, P.	University of Zurich	865
Roehrich, D.	Brookhaven National Laboratory	859, 866
Roeper, M.	Phillips University-Marburg	863
Roland, G.	Massachusetts Institute of Technology	866
Romanski, J.	INFN-Catania	895
Romanski, J.	University of Catania	896
Romero, J.	University of California-Davis	895
Roos, P. G.	University of Maryland	900
Rosati, M.	McGill University	814, 877
Roser, T.	Brookhaven National Laboratory	880
Rössle, E.	Freiburg University	813, 836, 886
Rothschild, P.	Massachusetts Institute of Technology	859, 866
Rotondo, F.	Yale University	814, 864
Roy, J.	TRIUMF	787
Rozon, M.	TRIUMF	787
Rozon, M.	University of Alberta	813, 836
Rubin, P.	University of Richmond	871
Rusch, G.	University of Siegen	883
Rusek, A.	University of New Mexico	813, 836, 885, 886
Russell, J. J.	University of Massachusetts-Dartmouth	850
Russo, G. V.	INFN-Catania	895

Rust, D. R.	Indiana University	852
Ryan, J.	Massachusetts Institute of Technology	866
Rykov, V.	Wayne State University	896

S

Sachelashvii, T.	High Energy Physics Institute, Tibilsi State University	865
Sadler, M. E.	Abilene Christian University	909
Saidkhanov, N.	Physical-Technical Institute-Tashkent	863
Saito, N.	University of Kyoto	813, 836, 886
Sakamoto, S.	National Laboratory for High Energy Physics-KEK	821
Sakitt, M.	Brookhaven National Laboratory	856
Sako, H.	Institute for Nuclear Study, University of Tokyo	866
Sakrejda, I.	Lawrence Berkeley Laboratory	896
Sakurai, H.	University of Tokyo	859
Salmanova, N. A.	Lebedev Institute-Moscow	863
Sandberg, J.	Brookhaven National Laboratory	821
Sandweiss, J.	Yale University	814, 864
Sangster, T. C.	Lawrence Livermore Laboratory	859, 866
Sanjari, A.	University of Notre Dame	852
Sato, S.	University of Tsukuba	866
Sato, T.	National Laboratory for High Energy Physics-KEK	787
Sato, T.	National Laboratory for High Energy Physics-KEK	821, 880
Sawafta, R.	Brookhaven National Laboratory	813, 836, 856, 874, 885, 886, 887, 890, 905, 906, 907, 909
Sarkisyan, V. R.	Physics Institute-Yerevan	863
Sarycheva, L.	Moscow State University	852
Schambach, J.	University of Texas-Austin	896
Scharenberg, R. P.	Purdue University	864, 895
Schmitt, H.	Freiburg University	813, 836, 886
Schone, H. E.	College of William and Mary	876
Schroeder, L.	University of California-Berkeley	891
Schumacher, R. A.	Carnegie-Mellon University	813, 836, 885, 886, 906, 907
Schwartz, A. J.	Princeton University	888
Scott, E.	Indiana University	852
Seitimbetov, A. M.	Institute of High Energy Physics-Alma Ata	863
Sekimoto, M.	INS-University of Tokyo	906
Semertzidis, Y.	Brookhaven National Laboratory	821
Sengupta, K.	Louisiana State University	868
Seth, K.	Northwestern University	852
Seto, R.	University of California-Riverside	859, 866
Seyfarth, H.	Forschungszentrum Jülich	890
Shabratova, G. S.	Joint Institute for Nuclear Research-Dubna	863
Shakova, C. I.	Institute of High Energy Physics-Alma Ata	863
Shatunov, Yu. M.	Budker Institute for Nuclear Physics	821
Shea, J.	University of Maryland	866
Sheen, J.	Wayne State University	877
Shein, I.	Institute for High Energy Physics-Protvino	852

Shephard, W. D.	University of Notre Dame	852
Shigakie, K.	University of Tokyo	866
Shimizu, Y.	University of Tokyo	887, 905
Shinkawa, T.	National Laboratory for High Energy Physics-KEK	787
Shoemaker, F. C.	Princeton University	787
Shpilev, S. N.	Physical-Technical Institute-Tashkent	863
Shrivastava, B.	Purdue University	895
Shutt, R.	Brookhaven National Laboratory	821
Simon-Gillo, J.	Los Alamos National Laboratory	814
Sinev, N. B.	Moscow State University	852
Singh, G.	State University of New York-Buffalo	875
Skank, H.	Ames Laboratory	864
Skeens, J.	Rice University	817
Skelding, D.	University of Washington	863
Skelly, J. F.	Brookhaven National Laboratory	880
Skorotko, T. Yu.	Institute of Theory and Experimental Physics-Moscow	868
Slaughter, A. J.	Yale University	864
Šlaus, I.	Rudjer Boskovic Institute	890, 909
Sleege, G.	Ames Laboratory	864
Smirnitski, V. A.	Institute of Theory and Experimental Physics-Moscow	868
Smith, A. J. S.	Princeton University	787
Smith, G. A.	Penn State University	864
Smith, J.	Rensselaer Polytechnic Institute	852
Smith, P. T.	Indiana University	852
Snydstrup, L.	Brookhaven National Laboratory	821
Sobolewski, Z.	Syracuse University	856
Soderstrom, K.	University of Lund	863
Soldatov, A.	Institute for High Energy Physics-Protvino	852
Solodov, E.	Budker Institute for Nuclear Physics	821
Solovieva, Z. I.	Khlopin Radium Institute-St. Petersburg	863
Soltz, R.	Massachusetts Institute of Technology	859
Soltz, R.	Lawrence Livermore Laboratory	866
Soluk, R.	TRIUMF	787
Sonderegger, P.	CERN	896
Sonnadara, U.	University of Pittsburgh	814, 877
Soukas, A.	Brookhaven National Laboratory	821, 880
Spinelli, P.	University of Bari	864
Spinka, H.	Argonne National Laboratory	880
Spooner, D.	San Jose State University	892
Srivastava, B. K.	Purdue University	864
Stachel, J.	State University of New York-Stony Brook	814, 877
Stanislaus, T. D. S.	Valparaiso, University	889
Stankus, P.	Columbia University	859, 877
Starinsky, N.	McGill University	877
Steadman, S. G.	Massachusetts Institute of Technology	859, 866
Stearns, R. L.	Vassar College	781, 813, 836, 885, 886
Stenlund, E.	University of Lund	863
Stephans, G. S. F.	Massachusetts Institute of Technology	859, 866
Sternlieb, B.	Columbia University	876
Stevens, A. J.	Brookhaven National Laboratory	787, 889

Stevenson, P. M.	Rice University	817
Stienike, D.	University of Notre Dame	852
Stillman, A.	Brookhaven National Laboratory	821
Stoenner, R. W.	Brookhaven National Laboratory	844
Stone, B.	Princeton University	787
Stone, E. C.	Caltech	869
Stotzer, R.	University of New Mexico	813, 836, 865
Strand, R. C.	Brookhaven National Laboratory	787
Stringfellow, B. C.	Purdue University	864
Stronach, C. E.	Virginia State University	876
Sugimoto, S.	INS-Tokyo	787
Sulanke, T.	Indiana University	852
Sukaton, R.	Carnegie-Mellon University	813, 836, 886
Sulak, L. R.	Boston University	821
Sum, V.	University of Manitoba	813, 836
Sung, T.	Massachusetts Institute of Technology	859, 866
Supek, I.	Rudjer Boskovic Institute	907
Surin, E. L.	Physical-Technical Institute-Tashkent	863
Sutter, R.	Brookhaven National Laboratory	813, 836, 856, 874, 885, 886, 890, 905, 906, 907, 909
Sutton, S.	Mt. Holyoke College	850
Švarc, A.	Rudjer Boskovic Institute	890
Svechnikova, L. N.	Physical-Technical Institute-Tashkent	863
Szarska, M.	Institute for Nuclear Physics-Krakow	868
Szymanski, J.	Indiana University Cyclotron Facility	813, 836

T

Taeger, S.	University of Notre Dame	852
Takagui, M.	University of São Paulo	814, 877
Takai, H.	Brookhaven National Laboratory	814
Takeutchi, F.	University of Kyoto-Sangyo	813, 836, 885, 886, 906
Tallerico, T.	Brookhaven National Laboratory	821
Tamura, H.	University of Tokyo	905
Tanaka, Y.	Kyushu University	859
Tanaka, K. H.	National Laboratory for High Energy Physics-KEK	878
Tang, L.	CEBAF and Hampton University	887, 907
Tannenbaum, M. J.	Brookhaven National Laboratory	859, 866
Teige, S.	Indiana University	852
Teng, L.	Argonne National Laboratory	880
Tepikian, S.	Brookhaven National Laboratory	880
Thern, R. E.	Brookhaven National Laboratory	880
Thieberger, P.	Brookhaven National Laboratory	892
Thiessen, H. A.	Los Alamos National Laboratory	907
Thomas, J.	Lawrence Livermore National Laboratory	859, 866
Thompson, A.	Dublin Institute for Advanced Studies	893
Thompson, D. R.	University of Notre Dame	852
Thompson, J. A.	University of Pittsburgh	865
Thompson, P. A.	Brookhaven National Laboratory	821

Throwe, T.	Brookhaven National Laboratory	814, 864
Tincknell, M. L.	Purdue University	864
Tippens, W. B.,	University of California-Los Angeles	890, 909
Toldo, F.	Brookhaven National Laboratory	821
Tolstov, K. D.	Joint Institute for Nuclear Research-Dubna	863
Tonse, S.	Lawrence Livermore National Laboratory	859, 866
Tothova, M.	Šafarik University	863
Tretyakova, M. I.	Lebedev Institute-Moscow	863
Trofimova, T. P.	Institute of Nuclear Physics-Tashkent	863
Truoel, P.	University of Zurich	865
Trzaska, M.	State University of New York-Stony Brook	877
Trzupek, A.	Institute for Nuclear Physics-Krakow	868
Tsang, M. B.	Michigan State University	900
Tuleeva, U. I.	Institute of Nuclear Physics-Tashkent	863
Turcot, A. S.	TRIUMF	787
Tursunov, B. P.	Institute of Nuclear Physics-Tashkent	863
Tuve, C.	INFN Catania	895

U

Uermuera, Y. J.	Columbia University	876
Ufimtsev, A.	Institute for High Energy Physics, Protvino	880
Ukai, K.	INS-Tokyo	787
Underwood, D. G.	Argonne National Laboratory	880

V

van Asselt, W.	Brookhaven National Laboratory	880
van Dijk, J. H.	Brookhaven National Laboratory	859
van Oers, W.	University of Manitoba	813, 836, 885, 906
Vardanyan, I. N.	Moscow State University	852
Vaziri, K.	Rensselaer Polytechnic Institute	881
Videbaek, F.	Brookhaven National Laboratory	859, 866
Viola, V. E.	Indiana University	900
Vokal, S.	Šafarik University	863
Volant, C.	CEA Saclay	900
Voloshin, S.	University of Pittsburgh	877
von Walter, P.	University of Heidelberg	821
Vongpaseuth, T.	State University of New York-Stony Brook	877
Vossnack, O.	Columbia University	859, 866
Vrlakova, J.	Šafarik University	863
Vulcan, W. F.	College of William and Mary	888
Vutsadakis, V.	Massachusetts Institute of Technology	859

W

Waddington, C. J.	University of Minnesota	868, 869
Wang, F. Q.	Columbia University	859, 866
Wang, G.	McGill University	814
Wang, G.	Indiana University	900
Wang, H. Q.	Hua-Zhong Normal University-Wuhan	863
Wang, S.	Kent State University	895
Wang, Y.	Columbia University	859, 866
Ward, H.	University of Texas-Austin	907
Ware, C. B.	University of Texas-Austin	871, 888
Waters, L.	State University of New York-Stony Brook	814
Weerasundara, D.	Kent State University	895
Wefel, J. P.	Louisiana State University	868
Wegner, H.	Brookhaven National Laboratory	859, 866, 892
Welsh, R.	Johns Hopkins University	878, 896
Welsh, R. E.	College of William and Mary	781, 888
Weng, Z. Q.	Hunan Ed. Institute-Changsha	863
Wessels, J.	State University of New York-Stony Brook	877
Weyer, H.	Paul Scherrer Institute	865
Weygand, D.	Brookhaven National Laboratory	852
White, C.	University of Minnesota	850
White, D. B.	University of California-Los Angeles	890, 909
White, S.	Brookhaven National Laboratory	888
Wieder, M.	Freiburg University	813, 836
Wiegel, B.	University of Siegen	883
Wieman, H.	Lawrence Berkeley Laboratory	895
Wienands, U.	TRIUMF	880
Wilczynska, B.	Institute of Nuclear Physics-Krakow	868
Wilczynski, H.	Institute of Nuclear Physics-Krakow	868
Wilkes, R. J.	University of Washington	863
Willutzki, H.	Brookhaven National Laboratory	817, 852
Winkel, E.	University of Siegen	883
Winn, D.	Fairfield University	821
Winter, R. G.	College of William and Mary	888
Wise, J.	Northwestern University	852
Wise, J.	University of Colorado	874
Wissink, S. W.	University of Indiana	887
Witkowski, M.	College of William and Mary	888
Witkowski, M.	Rensselaer Polytechnic Institute	852
Witzig, C.	Brookhaven National Laboratory	787
Wohn, F. K.	Iowa State University	862, 864
Wojcicki, S. G.	Stanford University	871, 888
Wolf, K.	Texas A&M University	814, 895
Wolfe, D.	University of New Mexico	813, 814, 836, 865, 885, 886, 906
Wolin, E.	College of William and Mary	871
Wolin, E. J.	Yale University	864
Wolter, W.	Institute of Nuclear Physics-Krakow	868
Woodle, K.	Brookhaven National Laboratory	821

Woodruff, D. S.	Massachusetts Institute of Technology	859, 866
Woody, C.	Brookhaven National Laboratory	814, 877
Worm, S.	University of Texas-Austin	871, 888
Worstell, W.	Boston University	821
Wosiek, B.	Institute of Nuclear Physics-Krakow	868
Wozniak, K.	Institute of Nuclear Physics-Krakow	868
Wright, D.	TRIUMF	889
Wright, R.	Lawrence Berkeley Laboratory	878
Wu, J. Y.	Pennsylvania State University	850
Wu, Y.	Columbia University	866
Wu, Y. D.	Columbia University	859

X

Xia, Y. L.	Hunan Ed. Institute-Changsha	863
Xiang, H.	University of California-Riverside	866
Xiong, H.	Wayne State University	877
Xu, N.	State University of New York-Stony Brook	814
Xu, Q.	Yale University	821
Xu, Q.	University of California-Riverside	866

Y

Yagi, K.	University of Tsukuba	866
Yamamoto, A.	National Laboratory for High Energy Physics-KEK	821, 886
Yamamoto, K.	Kyoto University	906
Yamashita, S.	Kyoto University	886
Yang, C. B.	Hua-Zhong Normal University-Wuhan	863
Yang, X.	Columbia University	859, 866
Yellin, S.	University of California-Santa Barbara	889
Yen, S.	TRIUMF	889
Yershov, A. A.	Moscow State University	852
Yoder, N. R.	Indiana University	900
Yokkaichi, S.	University of Kyoto	813, 836, 886
Yokosawa, A.	Argonne National Laboratory	880
Yokoya, K.	National Laboratory for High Energy Physics-KEK	880
Yoshimura, Y.	National Laboratory for High Energy Physics-KEK	787
Yosoi, M.	Kyoto University	906

Z

Zachary, D.	Massachusetts Institute of Technology	859, 866
Zajc, W. A.	Columbia University	859, 866
Zalikhanov, B. Z.	Joint Institute for Nuclear Research-Dubna	865
Zeitlin, Z.	Lawrence Berkeley Laboratory	895
Zeller, M. E.	Yale University	865
Zeps, V.	Carnegie-Mellon University	813, 836, 885, 886
Zeps, V.	University of Kentucky	907

Zhang, D. H.	Shanxi Normal-Linfen	863
Zhang, Y.	State University of New York-Stony Brook	877
Zhang, Y. C.	State University of New York-Stony Brook	814
Zhang, Z.	University of Pittsburgh	814
Zhao, J.	Northwestern University	852
Zhao, K.	City College of New York	881, 890
Zheng, P. Y.	Acadmica Sinica, Beijing	863
Zhochova, S. I.	Physical-Technical Institute-Tashkent	863
Zhou, D. C.	Hua-Zhong Normal University-Wuhan	863
Zhou, J. C.	Hua-Zhong Normal University-Wuhan	863
Zhu, F.	Brookhaven National Laboratory	866
Zhu, I.	University of Houston	887
Zhu, Q.	University of California-Riverside	866
Zhu, Y.	City College of New York	881, 890
Zieminska, D.	Indiana University	852
Ziliak, Z.	Indiana University	852
Ziock, H.	Los Alamos National Laboratory	907
Zou, C.	State University of New York-Stony Brook	814, 877
Zumbro, J. D.	Los Alamos National Laboratory	907
zu Putlitz, G.	University of Heidelberg	821
Zybert, R.	University of Birmingham	813, 836, 866