This submitted manuscript has been authored by a contractor of the U. S. Government under contract No. W-31-109-ENG-38. Accordingly, the U. S. Government retains a nonexclusive, royalty-free license to publish or reproduce the published form of this contribution, or allow others to do so, for U. S. Government purposes.

ANL-HEP-CP-92-55
July 1992

Fermilab Library
0 1160 0009672 1
ANL-HEP-CP-92-55

The Argonne Wakefield Accelerator (AWA) Laser System and Its Associated Optics*

W. Gai, R. Konecny and J. Power

Argonne National Laboratory, Argonne, IL 40439

Abstract

Generating a 100 nC, 15 ps pulse length electron beam at the AWA requires a stable laser system capable of producing 1 - 3 ps, 5 mJ at 248 nm with the ability to shape the wave front. We have installed a combined Coherent ultra fast 702 dye laser and Lambda Physik excimer pulsed amplification system which meets these requirements. A device has been built to produce shaped laser pulses. Detailed characterizations of the laser system, its associated optics development, and timing/amplitude stabilization are presented.

1. Introduction

The Argonne Wake-field Accelerator (AWA) is under construction. Phase I of the AWA includes a linac which can produce 100 nC, 10 ps electron bunches at 20 MeV. In order to generate such high electron beam currents, an L-band photocathode gun and a standing wave preaccelerator are used. One of the key components of the gun is a pulsed laser system which is capable of producing 2 ps, 5 mJ pulses at 248 nm and operates at maximum repetition rate of 30 Hz. We have purchased a joint Coherent-Lambda Physik laser system which fulfills our requirements. Details of AWA design and construction are discussed by J. Simpson[1]. In this paper, we concentrate on the laser set up and its characteristics.

2. Laser system configuration

The schematic diagram of the laser system is shown in the Figure 1. The system uses well known technologies[2]. The laser consists of a front end that produces picosecond pulses at 248 nm and a final KrF amplifier. The central component of the front end is a synchronously pumped mode locked dye oscillator (Coherent 702). The dye laser is tuned to the desired wavelength of 497 nm by a single-plate birefringence filter. Coumarin 102 dissolved in benzyl alcohol and ethylene glycol is the lasing medium, and DOCI dissolved in benzyl alcohol and ethylene glycol is the saturable absorber. A harmonic tripled mode locked Nd:YAG laser is used to pump the dye laser. The frequency of the mode locker is 40.625 MHz of which the 32nd harmonic is exactly 1.3 Ghz.

*This work supported by the U.S. Dept. of Energy, Division of High Energy Physics, under contract No. W-31-109-ENG-38.

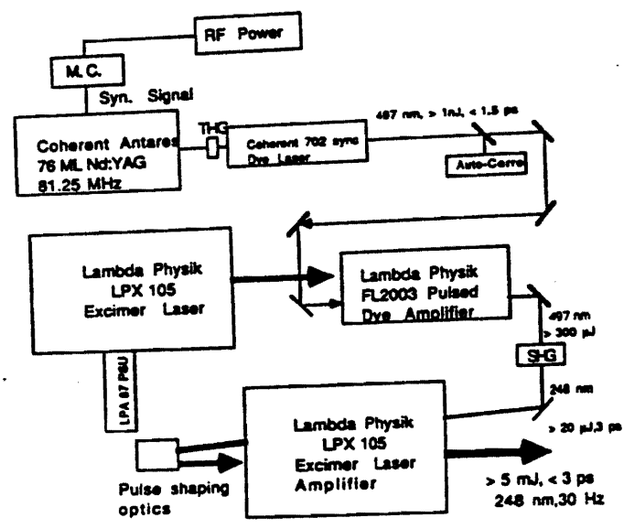

Figure 1 Schematic Block Diagram of The AWA Laser System

A single pulse from the dye laser output train is amplified to 300 µJ through a three-stage amplifier. The dye amplifier is Lambda-Physik FL2003 pumped by 100 mJ, 308 nm pulses from a Lambda-Physik LPX105i excimer laser. The duration of the pump pulse is shortened to 10 ns so only one pulse from the dye oscillator can be amplified. The output from the dye amplifier is frequency doubled in a 3x3x7mm angle matched BBO crystal. Output at 248 nm is typically 25 - 30 µJ. Because the length of this doubling crystal, temporal broadening of the input pulse is expected.

Amplification of the ultra-short UV pulses is done in a single stage KrF excimer laser (Lambda-Physik LPX105i). The input pulses pass through the amplifier twice in order to fully utilize its stored energy. Output energy from final amplifier is measured by using Molectron J25 joule meter. Typical output of 8 - 10 mJ is obtained

routinely. Depending on the discharge HV, the ASE is ~ 5 - 10% measured at 20 cm from the output window. The length of the final pulse is measured by Hamamatsu streak camera (model C1587) which has resolution of 2 ps. The typical measured pulse length (FWHM) is 3 - 4 ps. No satellite pulses observed. Repetition rate of the of the laser can be as high as 35 Hz. We expect to run the laser routinely at 30 Hz.

3 Noise in the Laser System

There are two major concerns of the laser in terms its stabilities: pulse to pulse amplitude and timing jitter.

The amplitude jitter of the final output pulses is measured by the joule meter. The typical jitter value is ± 7% (peak-peak). This is a great concern to us. An amplitude noise reduction device (noise eater) has been designed[3] to limit the fluctuation down to ± 2%. It is a feedforward system. A small fraction of the laser pulse incident on a vacuum photodiode generates a voltage pulse. The voltage pulse is then amplified to the kV range and then drive a Pockel cell. The transmission of the Pockel cell has negative slope vs applied voltage, so it can be used to stabilize the incoming laser pulses by adjusting the voltage amplifier appropriately. Another way to deal with the amplitude jitter is a pulse energy selection method. Again, a small fraction of the laser pulse is incident on a joule meter. The energy reading is sent to the fast trigger logic. If the energy of the pulse falls within a preset range, the logic will generate a trigger signal to activate the data acquisition for that pulse. This technique effectively lowers the duty factor of the machine. But with the laser operate at 30 Hz, we are expecting that the effective rep-rate will exceed 10 Hz.

The timing jitter of the dye oscillator was measured by using two different methods: time domain and frequency domain. The time domain measurement were made with a Tektronix oscilloscope using 7603 main frame, 7S11 sampling/TDR plug-in, and S-4 sampling head. The laser pulse was monitored with a fast diode (rise time of 100 ps). Figure 2 shows the laser jitter of 10 ps p-p (.5 second exposure). This technique sets upper limit of the jitter because its close to the limit of the technique (trigger jitter is ~ 10 ps). The long term drift can be monitored by using the same method. We have monitored the dye oscillator for more than 20 minutes and drift is less than 10 ps. The frequency domain measurement was done by using the output of fast diode (25 ps rise time) as the input to a RF spectrum analyzer(HP8569B). The noise band of higher harmonic mode locked laser pulses can be used to calculate the rms timing jitter[4]. Typical data is shown in Figure 3. The calculated rms timing jitter (>100 Hz) is 2.5 ps which agrees with time domain measurements. Such timing jitter is tolerable for our application.

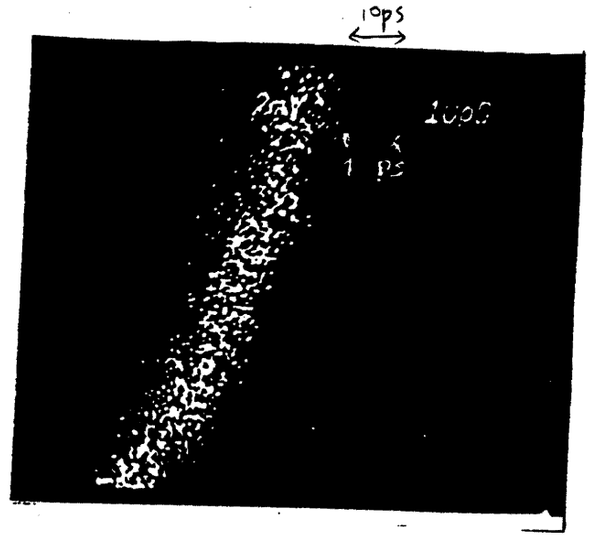

Figure 2 Time domain measurement of the dye oscillator's timing jitter

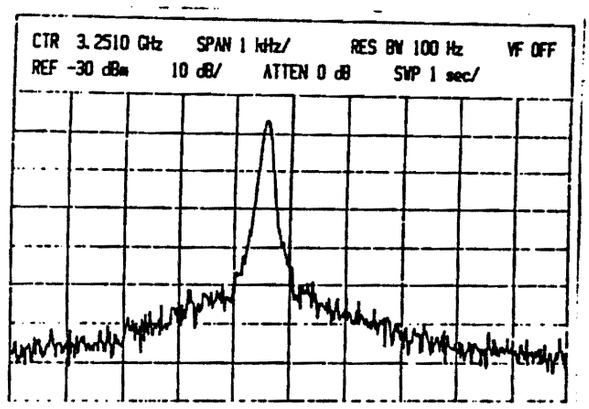

Figure 3. Frequency domain measurement of the 702 dye oscillator's timing jitter

4. Wave front shaper

In order to illuminate the photocathode with a curved laser pulse, a wave front shaper has been designed and built. The mechanical drawing is shown in the reference 1. The shaper is composed by 9 concentric cylinders. Each cylinder position can be adjusted relative to its next neighbor by a stepping motor. Front surface of the cylinder is optically polished. Optical coating can be applied if necessary. Laser pulse incidents on the front surface of the shaper normally. By adjusting each cylinder's position, the reflected wave front is shaped accordingly. The wave front can be either concave or convex.

Summary

The joint Coherent-Lambda Physik ultra high power laser system is operational at AWA. The preliminary characterizations of the laser have been performed. The laser system can be operated routinely on the daily basis. Optimization of the laser performance will be done in conjunction with the AWA installation.

Finally, we would like to acknowledge the helpful suggestions from T. Rao and P. Simon. This work is supported by US Department of Energy, High Energy Physics Division under contract No. W-31-109-ENG-38.

References:

1. J. Simpson, "Argonne's New Wakefield Test Facility", this proceedings.

2. J. P. Roberts, A. J. Taylor, P. H. Lee, "High-irradiance 248-nm laser system", Optics Letter, Vol 13, p734 (1988)

3. J. Norem and W. Gai, "Development of Laser Optics for the AWA Photocathode", IEEE Particle Accelerator Conference Proceedings, p1984, San Francisco, May 6-9, 1991.

4. D. von der Linde, "Characterization of the noise in continuously operating mode-locked lasers", Applied Physics B 39, p201 (1986)