SUMMARY OF FIELD QUALITY DATA FROM SSC R & D DIPOLES*

P. Wanderer
Brookhaven National Laboratory
Upton, New York 11973

Summary

The field quality data from the R&D SSC 4.5m-long dipoles are summarized and compared to SSC requirements. In most respects, the magnets exceed the requirements. Modifications incorporated into the 16.6m magnets are expected to correct the few deficiencies. Specific aspects of the magnet design are discussed in terms of their effect on particular multipoles and the time required for modifications.

Introduction

This note is primarily a snapshot of the discussion of field quality, accelerator design, and magnet construction which has been going on for the last two years and which will continue for some time to come. The members of the Field Quality subgroup at Snowmass (A. Chao, P. Dahl, J. Herrera, R. Talman, and M. Tigner) have been regular contributors to these discussions. This is also intended to be pedagogical, although a familiarity with the standard notation for magnetic fields--the common language of magnet builders and particle trackers--is assumed.

Notation

The notation used is that from the SSC Conceptual Design Report:[1]

$$B_y + iB_x = B_o \sum_{n=o}^{\infty} (b_n + ia_n)(x + iy)^n$$

The vertical and horizontal magnetic fields are B_y and B_x respectively, with the main dipole directed up. At injection (1 TeV), the field is about 0.3T. At full field (20 TeV), the field is 6.6T [2]. The multipoles are conveniently discussed in terms of the normalized coefficients, a_n and b_n. In this notation, a_1 is the skew quadrupole and b_2 the normal sextupole. It is convenient to define a "unit" of a_n and b_n as 1×10^{-4} cm-n. In SSC dipoles, typical values of the normalized coefficients are of order one unit.

Symmetries and Magnet Construction

In a pure dipole field, $b_o = 1$ and all other multipoles are zero. If the dipoles were made so that the conductors were placed identically in each of the four quadrants (Fig. 1) and centered in the iron yoke (Fig. 2), the only non-zero terms would be the b_n terms, with n even. In the design of the magnet cross section, the placement of the superconducting cable, the copper wedges, and the pole angle are varied to minimize the allowed terms.

If unallowed multipoles are found, then dipole symmetry has been broken. For example, if the top half of the magnet differs from the bottom half, the full range of skew multipoles a_n would be generated.

* Work performed under the auspices of the U. S. Department of Energy.

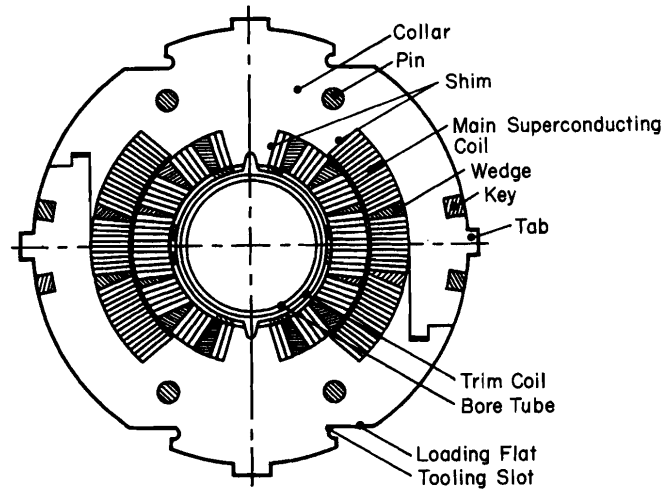

Figure 1. Dipoles cross section showing detail of coil and stainless steel collars.

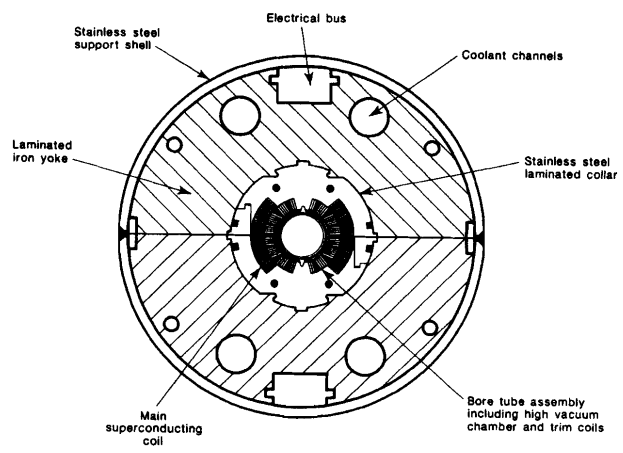

Figure 2. Dipole cross section showing coil, collars, and iron yoke.

A top-bottom asymmetry can arise if the top coil is not the same size as the bottom coil or if the collared coil is not centered in the iron yoke. Alternatively, if a magnet lacks left-right symmetry, half of the multipoles will be generated, alternating between normal and skew as the multipole number increases: b_1, a_2, b_3, a_4, etc. If an even-n skew term such as a_2 is non-zero, both top-bottom and left-right symmetry have been violated.

It is helpful to give two examples of the sensitivity of multipoles to the details of magnet construction. The first is the placement of the collared coil in the yoke, which is controlled by the tabs on the stainless steel collars which fit into notches in the iron yokes. If the collared coil is not centered vertically, a skew quadrupole a_1 is generated at the rate of 0.4 units/mil (1 mil = 0.001 inches = 25 μm). A left-right miscentering produces a normal quadrupole term b_1 at the same rate. The second example is the size of the shim at the pole, which controls the pole angle of the inner and outer windings. A variation of the shim in all four quadrants produces a normal sextupole b_2 at the rate of 0.4 units/mil for the shim in either the inner or the outer winding. By comparison, the mechanical tolerances of the punched laminations and the size of the individual turns of superconducting cable are typically tenths of a mil. However, the accumulation of tolerances due to the 36 turns in the coil, and due to the fit of the coil, collars, yoke, and cryostat is typically at the level of several to ten mils.

Magnet construction imperfections, and their effect on particle orbits, fall into two classes: random and systematic. It is convenient to discuss the two types of imperfections separately.

Field Quality Estimate from Tevatron, CBA Magnets

It has required a certain amount of courage to extrapolate from the existing results (approximately 1000 Tevatron dipoles with a 7.5 cm aperture and about 20 CBA dipoles with a 14 cm aperture) to the 8600 dipoles with 4 cm aperture needed for the SSC. A subgroup of the Aperture Task Force, headed by E. Fisk, labored for the better part of a year to make the needed estimates.[3] The group observed that the multipole distributions of the Tevatron and CBA magnets were strikingly similar, once the factor-of-two difference in aperture was taken into account. The most important features were a decrease of the rms widths with increasing multipole number and a "zig-zag" pattern superimposed on the decrease.[4] Thus,

$$\sigma(a_1) > \sigma(b_1)$$

$$\sigma(a_2) < \sigma(b_2)$$

$$\sigma(a_3) > \sigma(b_3)$$

etc.

Three independent models were constructed to estimate the mechanical imperfections which produced the measured multipole distributions. The models, by E. Fisk [5], J. Herrera et al.[6], and R. Meuser [7], were then used to extrapolate the imperfections to apertures in the range of interest for the SSC. In spite of their different approaches, the models produced similar results. The average of their predictions was taken as the best estimate, with model-to-model variations being used as a gauge of the uncertainty in the estimates (typically 30%-50% for individual multipoles). These estimated widths are shown as dashed lines in Figs. 3-5.

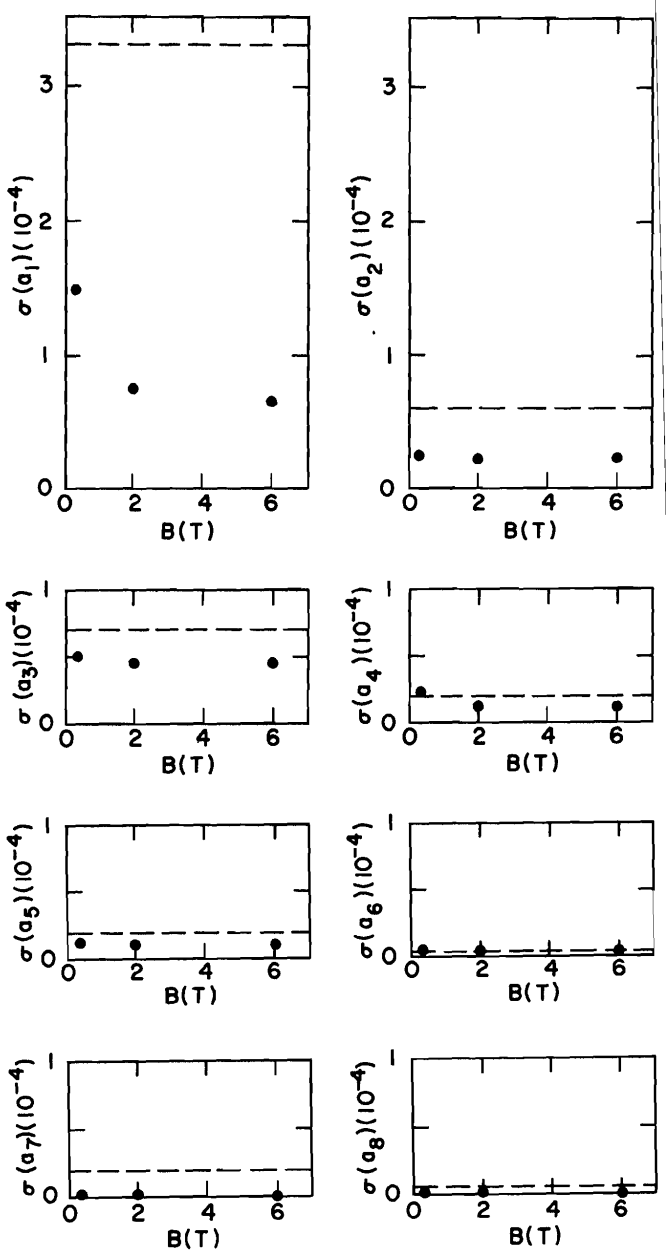

Figure 3. RMS widths of distributions of skew multipoles of six 4.5m R&D dipoles as a function of central field. The dashed line is the estimate of the Aperture Task Force.[3]

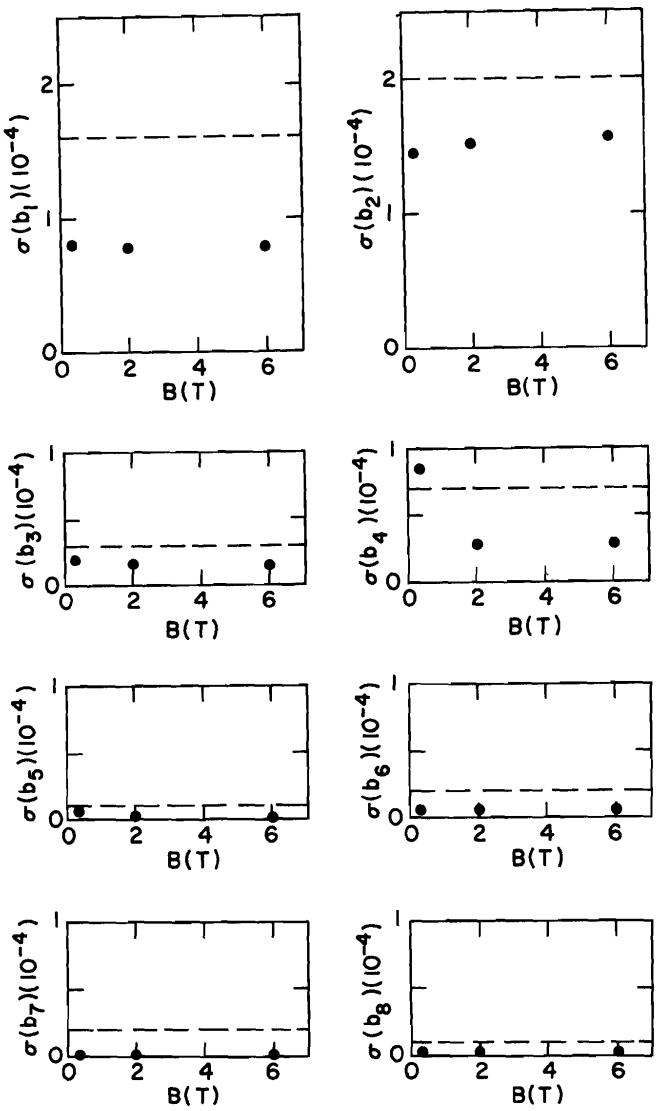

Figure. 4. RMS widths of distributions of normal multipoles of six 4.5m R&D dipoles as a function of central field. The dashed line is the estimate of the Aperture Task Force.[3]

Measurements of Random Errors

Cosine theta dipoles for SSC R&D have been made at BNL, Fermilab, and LBL. The BNL program has included eight magnets with 4 cm i.d. and 4.5m and 3.5m length. Previously at BNL, four 2-in-1 dipoles with 3.2 cm i.d. were made.[8] At Fermilab, about 10 1m-long dipoles with 5 cm aperture, and one with 4 cm aperture were made. The ongoing LBL program has yielded more than seven 1m-long, 4 cm dipoles. In this paper, the focus will be on results from the first six dipoles made at BNL because these were made as much alike as possible. The measured random errors for these magnets, integrated over their 4.5m length, are given in Figs. 3 and 4. The skew terms are in Fig. 3 and the normal terms are in Fig. 4. For each multipole, the rms widths of the multipole distribution are shown at injection (0.32T), midfield (2T),[9] and high field (6T). Overall, the rms widths decrease with increasing n and exhibit the "zig-zag" pattern. This indicates that these SSC two-layer cable magnets belong to the same family as Tevatron and CBA magnets, even though the diameter has been reduced so much that the conductor thickness is comparable to the magnet aperture.

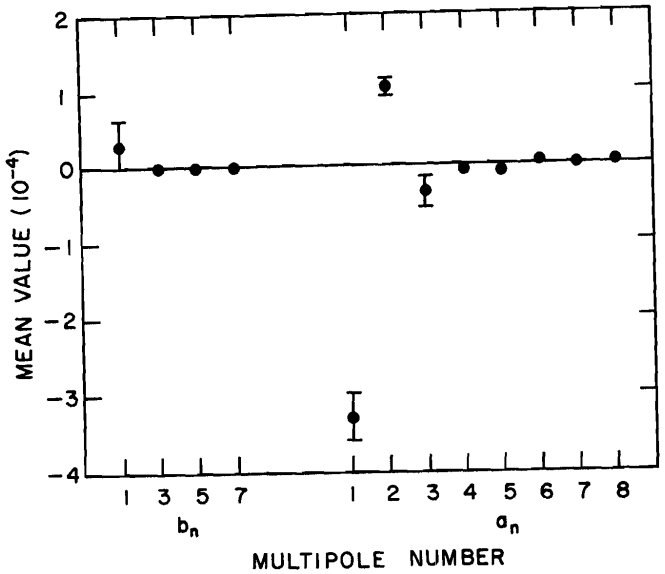

Figure 5. Mean values of unallowed multipoles of six 4.5m R&D dipoles at 2T.

Looking in detail, it can been seen that the measured values are in all cases less than or very near the estimates. Since the estimates based on Tevatron and CBA experience have been used in the proton orbit calculations for the last year, they are a particularly important benchmark. Two of the multipoles, the skew quadrupole and the decapole, are somewhat larger at injection than at higher fields. The apparent increased size of the skew quadrupole term is due to feeddown from the normal sextupole, which is large at injection in these magnets. (Future magnets, with smaller filaments, will have greatly reduced magnetization terms.) The decapole data are still under study.

Measurements of Systematic Multipoles

The mean values of the multipoles are presented in Fig. 5 and Fig. 6. (The uncertainties in the mean have been obtained by dividing the measured rms widths by the square root of six.) For the SSC, the limits on the mean values are set forth in a note by Chao and Tigner.[10] For the low-order forbidden multipoles shown in Fig. 5, the means are required to be zero within 0.1 or 0.2 units. It is clear that the skew quadrupole is too large. This term has been traced to a top-bottom asymmetry in the assembly process, due to an interference in the fit between the upper and lower tabs on the stainless steel collars and the appropriate slots in the iron yoke. The problem was addressed in the design of the laminations for the full-length (16.6m) dipoles, where a

mechanically satisfactory fit has been obtained. Preliminary data from the first 16.6m dipole give a skew quadrupole of less than one unit, which is quite encouraging. It is thought that the same problem may have also affected the skew octupole which, like the skew quadrupole, can exist only if top-bottom symmetry is broken.

The non-zero value of the skew sextupole is due to the ends of the coils, which were designed for the large bending radius required by Nb_3Sn. The ends have a large sextupole term but, unlike the straight section of the magnet, are not keyed to force alignment of the sextupole with the dipole of the straight section. Such an angular misalignment will generate a skew sextupole. Multipoles measured only in the straight section of the magnet have a skew sextupole consistent with zero. The coil ends have been redesigned for a small bending radius and a small sextupole term.

In discussing the mean values of the allowed multipoles (Fig. 6), the appropriate quantity to consider in these R&D magnets is the mean difference between the (non-zero) calculated values and the measured values. The present magnets were not designed to have allowed multipoles as small as current requirements.[10] However, if the calculated and measured values are in good agreement, the next iteration of the cross section, designed to have suitably small allowed multipoles, can be expected to be satisfactory. The size of the mean sextupole term in Fig. 6 is attributed to shim changes made in the series of magnets while determining the optimal balance between cable size, coil molding pressure, and assembly prestress. The assembly process is expected to be much more uniform in future magnets, and a smaller value for the sextupole is expected. Among the remaining three allowed multipoles, b_4 and b_8 are sufficiently close to zero. The b_6 term is about 1-1/2 deviations from zero; more data will be needed to ascertain whether there is a problem.

Data from LBL 1m models are shown in Fig. 6.[2] These also indicate generally good agreement with present requirements.

We have also measured the transfer function B/I of six magnets and find a mean value of 1.0358T/kA, with σ = 0.0007T/kA, in agreement with calculation. The SSC requirement on B_0 is stated in terms of the field integral, which will be checked in the 16.6m program.

Extrapolation to 8600 Dipoles

The data from these first magnets are as good as and often better than the extrapolations from Tevatron and CBA magnets, so the question arises as to whether the reference set of multipoles should be changed to reflect that fact. Such a change seems premature for several reasons. There are still several R&D topics to be completed, among them the top-bottom asymmetry. Also, data on the integral bending power and the dipole angle of the 16.6m magnets are still to come. Finally, some allowance must be made for unexpected problems which arise during mass production. Examples exist from Tevatron experience, and the SSC will probably also have to coordinate multiple production firms. The HERA experience will be of value here.

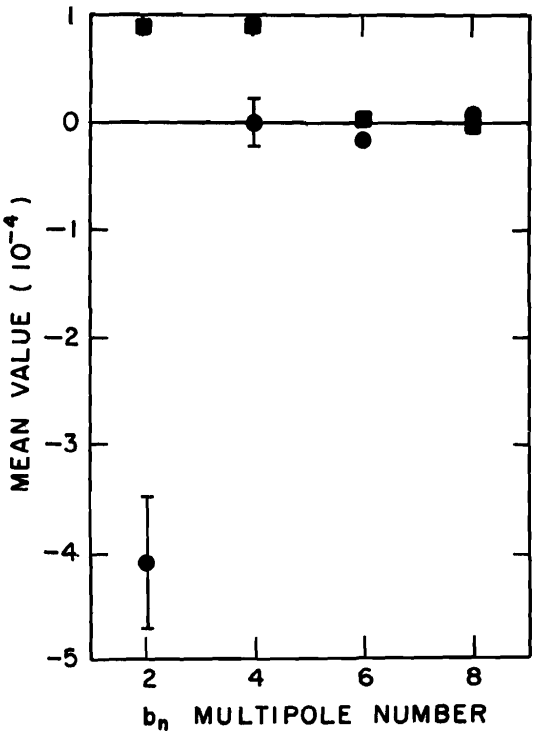

Figure 6. Mean values of the difference between the calculated and measured values of the allowed multipoles of six 4.5m R&D dipoles at 2T (dots) and seven 1m R&D dipoles at 3T (squares).

Reconciling Expected Magnet Performance and SSC Needs

It is useful to continue looking ahead and ask how the magnets, with known deficiencies corrected, will fit into the SSC. Two useful examples can be drawn from the low-order multipoles.

In the initial estimation of magnet variations made by the Aperture Task Force subgroup,[3] it was assumed that a series of shims in 1-mil increments would be used to center the collared coil in the yoke. This was based on a similar procedure used in the Tevatron dipoles, where quadrupole terms resulting from left-right and top-bottom asymmetries in the collared coil assembly were removed by the appropriate shimming of the collared coil in the iron yoke. With this assumption, rms errors of 0.7 units could be achieved for both normal and skew quadrupole terms. The magnets made thus far have not incorporated these shims. Nonetheless, the measured rms error for b_1 is only 0.8 units. Further, we expect to reduce a_1 in future magnets, as discussed above. A system of shimming to 1 or 2 mils has been designed but it must be anticipated that its implementation would take considerable effort and time. Further, it will add cost and complexity to the final magnet. Thus it has been asked whether rms errors in the vicinity of one unit would be acceptable. Initial indications are encouraging, but no formal decision has yet been made.

The second example is the sextupole term, which is currently felt to be the most important term in determining the useful aperture of the dipoles. In this case, SSC requirements on the mean (0.008 units) are greatly in excess of the magnet builders' ability to satisfy them. The design cross section may depart from zero by as much as two units if only one iteration is allowed. Further, magnetization effects will produce -5 units of sextupole at injection and saturation effects in the present yoke will produce 2 units at peak field. A solution is trim coils, in this case installed inside the dipoles themselves. The initial models of trim coils have worked well. Further, it is possible to decrease the effects of the random sextupole terms by sorting magnets, so that the worst cases go into the least sensitive positions in the SSC lattice. A similar procedure was employed in placing Tevatron dipoles.

These examples illustrate that a variety of methods are available to optimize the field quality and cost of the magnets. Different problems will doubtless arise in a full-scale production program. It is clear that flexibility will be the key to solving them.

Relative Difficulty of Changes to the Magnet

Negotiations between magnet makers and accelerator designers are made somewhat easier if each group has some understanding of the other's situation. Thus a list of possible changes to the dipoles, and the degree of difficulty, may be useful. In this case, the time scale is taken as the measure of the difficulty of changes. Probably the change requiring the longest lead time would be a change in the critical current or filament size of the superconductor. Between the time the bid for superconductor goes out and the time the results from several 16.6m magnets would be available, 1-1/2 to 2 years would have elapsed. A change in coil diameter would be less time-consuming if the new coils could be wound with the existing cable. Nonetheless, from the time a diameter were chosen until results were available, probably 1-1/2 years would pass due to the necessity of redesigning the cross section and then ordering new laminations for the magnet and the manufacturing fixtures.

On the easier side would be changes in the cross section of the coil which could be accommodated by minor changes in the shims at the center post or in the wedges. It would be possible to make modest changes in the multipoles in this fashion, but in magnet design at the 10^{-5} level it may not be possible to find a satisfactory solution with so many constraints. A small change in the wedges or shims could be incorporated and results in hand in about 3/4 of a year, essentially the minimum time to make a group of magnets at our present rate of progress. Similarly, it may be possible to incorporate a change in the design of the ends of the coil in the same length of time. One final example of a relatively quick change would be a small change in the trim coil. If the trim coil change did not necessitate changes in the dipole, redesigned trims could simply be slipped into the assembly process whenever they were ready. Probably a trim with different multipoles could be tested 6 to 9 months from the time the design was complete.

Measurement Accuracy

It is recognized as essential that the limits of the measuring system be known and adequate to the task. A new measuring probe has been developed for measuring these small bore, long magnets. Dubbed "the mole", it is powered by compressed air and has as few as possible magnetic components to minimize the problem of rotation in a high field. Initial results from the mole are quite encouraging. The mole was used to measure a Tevatron dipole which had been measured 11 times previously. Results from the mole agreed with the average of previous measurements generally within 0.2 units. Much more work in the area of calibration and repeatability is needed, but we are off to a good start.

References

1. Conceptual Design of the Superconducting Super Collider, SSC-SR-2020 (March 1986), p. 124.
2. Detailed results from SSC R&D dipoles are given in ibid., Attachment B, SSC-SR-2020B (March 1986). Summaries of Tevatron and CBA magnets can be found in: R. Palmer and A. Tollestrup, Annual Review of Nuclear and Particle Science 34 (1984) 247-284; H.T. Edwards, Annual Review of Nuclear and Particle Science 35 (1985) 605-660; E. J. Bleser et al., Nucl. Inst. and Meth. in Phys. Research A235 (1985) 435-463.
3. H. E. Fisk et al., Magnetic Errors in the SSC, SSC-7 (April 1985), unpublished.
4. This was first noted by T. Collins.
5. H. E. Fisk et al., Proc. 1984 Summer Study on the Design and Utilization of the SSC, p. 329.
6. J. Herrera et al., IEEE Trans. on Nucl. Science, NS-32, No. 5 (1985) 3689.
7. Robert B. Meuser, ibid., p. 3725.
8. P. Dahl et al., ibid., p. 3675.
9. The data shown here include three changes to the 2T multipoles summarized in Ref. 1. First, the offset of the measuring coil has been calculated by assuming that b_7 and a_7 are due to feeddown from b_8. The effect of this offset was not included in the analysis for Ref. 1. Second, results from all six magnets are now reported at a helium temperature of 4.5K, whereas the data of Ref. 1 contain two measurements made at 2.6K. This has little effect on the 2T results but is needed to correctly interpret measurements made at 0.3T. Third, explicit account has been taken of the top-bottom asymmetry discussed in the text by recording the signs of the odd-n skew multipoles for two of the magnets. In one case, it is know that the orientation of the magnet during testing was the reverse of the usual orientation; in the other case, no record was kept and the motivation for reversing the signs comes from the consistency of the sign and magnitude of a_1 in the other five magnets.
10. A. Chao and M. Tigner, "Requirements for Dipole Field Uniformity and Beam Tube Correction Windings", SSC-N-183 (May 1986) unpublished.