BNL 14160

25-FOOT CRYOGENIC BUBBLE CHAMBER DESIGN REPORT*

OCTOBER 1969

*Design by Brookhaven National Laboratory, Upton, New York.
To be constructed at the National Accelerator Laboratory, Batavia, Illinois.

Work performed under the auspices of the U.S. Atomic Energy Commission.

TABLE OF CONTENTS

		Page No.
A.	GENERAL DISCUSSION	
	1. Introduction	3
	2. Physics with the Large Chamber	6
	3. Summary of the Report	17
B.	DESCRIPTION OF BUBBLE CHAMBER SYSTEMS	
	4. Chamber and Vacuum Tank	27
	5. Expansion	36
	6. Refrigeration	42
	7. Optics	62
	8. Magnet	83
	9. Instrumentation and Controls	100
C.	CONVENTIONAL FACILITIES	
	10. Planning Considerations	113
	11. Site Plan	113
	12. Buildings	117
	13. Utilities	133
D.	SAFETY CONSIDERATIONS	143
E.	CONSTRUCTION COST ESTIMATES AND SCHEDULE	157
F.	ESTIMATES OF OPERATING PROGRAM	175

GENERAL DISCUSSION

DESCRIPTION OF BUBBLE CHAMBER SYSTEMS

CONVENTIONAL FACILITIES

SAFETY CONSIDERATIONS

CONSTRUCTION COST ESTIMATES & SCHEDULE

ESTIMATES OF OPERATING PROGRAM

GENERAL DISCUSSION

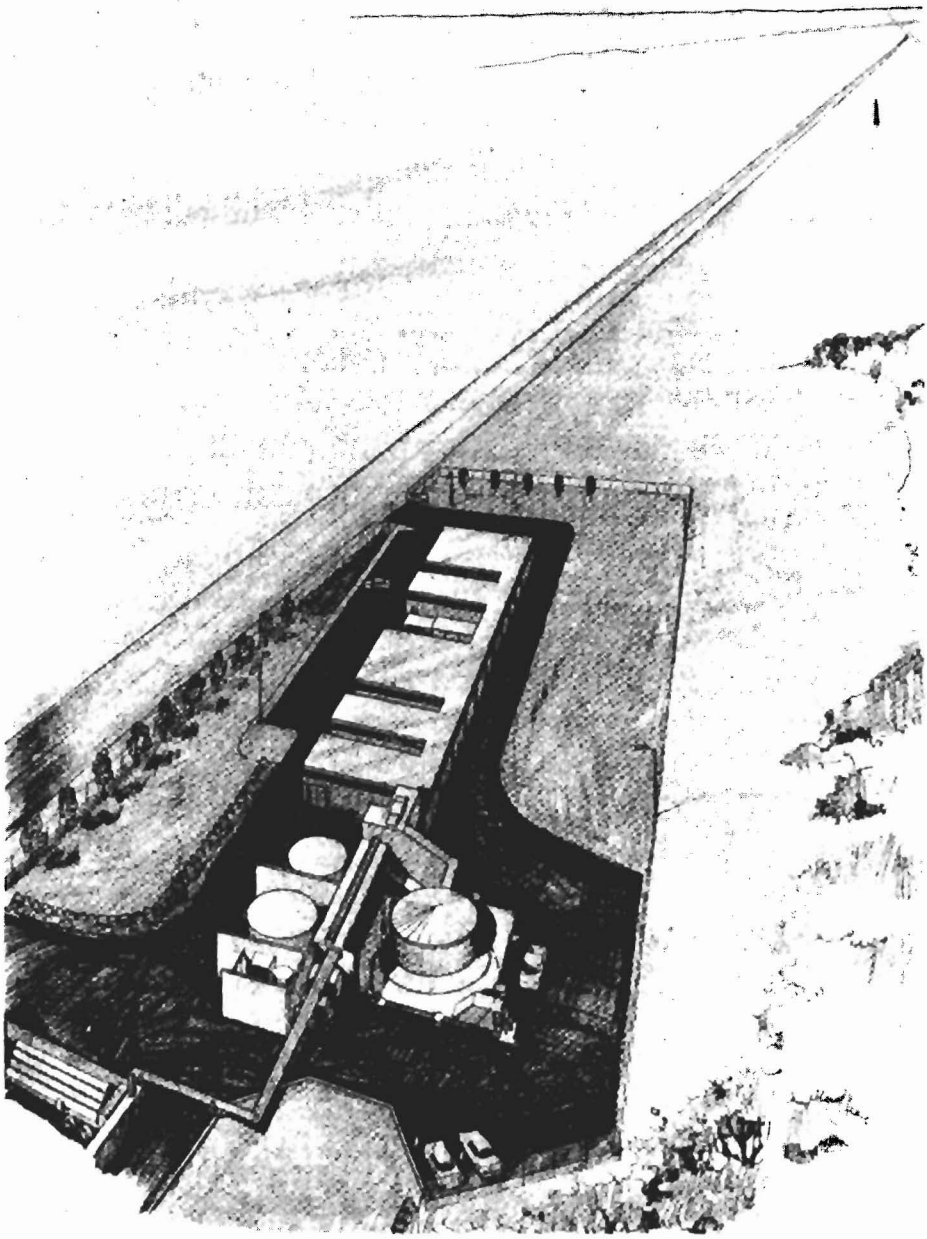

Figure 1. Artist's Perspective View of Bubble Chamber Area

A. GENERAL DISCUSSION

1. Introduction

A new national accelerator facility is under construction at Batavia, Illinois. The principal scientific instrument of the National Accelerator Laboratory will be a proton synchrotron of 200-Bev energy and of a design intensity of 5×10^{13} protons per pulse or 1.5×10^{13} protons per second. The prompt realization of this accelerator, which also allows for future expansion of its energy to about 400 Bev, has been given highest priority in the field of high energy physics. The prime objective is to provide an instrument which will enable physicists to probe more deeply into the structure of matter, thereby greatly enlarging our knowledge of the physical world.

The construction of the accelerator has progressed on schedule since the start of construction (December 1968). It is believed that the facility should be available for starting the experimental program as early as July 1972. Since most physicists evaluate a large bubble chamber as an instrument particularly suitable for the exploration of strong interactions in NAL's new domain of energy and also believe the chamber has a unique value as a tool for both qualitative and quantitative studies of neutrino interactions,[1] it is important that the construction of the proposed 25-foot cryogenic bubble chamber at NAL proceed as outlined in this design report for efficient and timely use of the new accelerator.

In May 1968, an agreement was reached between NAL and Brookhaven National Laboratory on the method to proceed with the design and construction of a large chamber for use at NAL. In this manner, NAL has available for this project the engineering design group which has been responsible for the construction of all of the bubble chambers now in operation at BNL and which has made extensive and detailed design concept and cost estimate studies of this new type of bubble chamber now proposed for NAL.[2] An understanding of this joint-effort plan between BNL and NAL can be best achieved by reference to the May 1968 Agreement as reprinted as follows.

1) BNL will replace its current proposal for a 14-foot cryogenic bubble chamber by a joint BNL-NAL proposal for a chamber designed for use at NAL. The scope of the proposal will be determined by mutual agreement.

2) NAL will develop a site plan and a program which will provide for the early operation of this chamber at the new accelerator.

3) Parameters concerning shape, optics, magnetic field, etc.,which affect the physics research capability of the chamber, will be decided upon jointly by NAL and BNL.

4) BNL will take the responsibility for design, construction, and assembly of the chamber. Close liaison and consultation with NAL will be maintained. Other parties will also be consulted whenever desirable.

5) NAL will take the responsibility for design, construction, and assembly of beams, buildings, and on-site utilities necessary for operation of the chamber at NAL. Close liaison and consultation with BNL will be maintained.

6) While subassemblies may be tested at BNL, final assembly and testing will take place at NAL, unless this is deemed inappropriate by both NAL and BNL at the time of final assembly.

7) Location of the chamber with respect to the accelerator at NAL, particle beams, and utilities will be determined by NAL in liaison with BNL.

8) BNL, in close cooperation with NAL, assumes the responsibility to assemble the operating staff for the chamber and to make the chamber a fully operative facility for NAL's users.

9) After a proper transition period, the operating crew will transfer to the NAL staff and NAL will assume full responsibility for operation of the chamber. Budgetary

questions during the transition period will be resolved at the proper time by mutual agreement.

10) The design, construction, and assembly schedule will be determined by BNL in relation to the time when funds are made available.

11) The annual level of the appropriation request will be determined by NAL in consultation with BNL.

12) If the construction schedule for the new accelerator should lead that for the bubble chamber, a decision by both BNL and NAL could bring the BNL 7-foot chamber to NAL for interim operation.

This design report gives solutions to the problems of constructing a large volume hydrogen bubble chamber optimized for use at NAL. An artist's perspective view of the chamber as it will be installed at NAL is shown in Fig. 1, page 2. We are confident that the bubble chamber described in this report can be successfully constructed in this way and within out cost and time estimates. It should be emphasized, however, that improvements and refinements may be incorporated during detailed design.

The work leading to this report was done at BNL during the spring and summer of 1969. The NAL Aspen Summer Studies of 1968 and 1969 carried out critical reviews of the chamber justification and use. The cooperation of all the scientists and engineers who have contributed to the present plans is gratefully acknowledged.

2. Physics with the Large Chamber

1. FOREWORD

The 25-foot bubble chamber described in this report is a major step in equipping the 200-Bev proton accelerator with particle detectors. The contribution to physics made at any accelerator depends not only on its intrinsic capabilities but also on experimental equipment such as this bubble chamber. The chamber will make it possible to exploit the unique research opportunities that will be opened up by operation of the new accelerator.

The cryogenic bubble chamber technique has been established, during the past decade, as one of the most powerful tools for studying the properties of the elementary particles and their interactions. Today, about one-half of the experimentalists in particle physics research in universities use bubble chamber facilities located at the various national laboratories and analyze the data at their home institutions. More than thirty university users' groups in the U.S. are now active in elementary particle physics research using the bubble chamber technique. Their participation at NAL will not only provide direct contribution to the research program but will also constitute an important link of the program to students and developing scientists in those educational institutions.

The important features of the hydrogen or deuterium bubble chamber as a particle detector are:

(a) The accuracy with which charged particle trajectories can be reconstructed and particle momenta determined;

(b) The fact that a 4π steradian solid angle is available for formation of tracks from the vertex of an interaction;

(c) The sure knowledge that the primary interaction takes place with a target particle which is known (proton or deuteron) and which is essentially at rest;

(d) The fact that even very short charged particle recoils can be detected, if they are present.

These features of the hydrogen bubble chamber make it an extremely useful instrument in the performance of exploratory investigations in new areas of high energy physics.

A review of physics justification for the 25-foot bubble chamber was carried out at the NAL Aspen Summer Study of 1969. For the convenience of the reader, abstracts of the two major summary papers are given in (2) Neutrino Experiments in the 25-foot Bubble Chamber[3] and in (3) Strong Interaction Physics in the 25-foot Bubble Chamber.[4] Also, short sections on internal track-sensitive targets and measurement precision are included. (Track-sensitive targets are transparent containers filled with hydrogen or deuterium, inserted in a bubble chamber filled with a neon-hydrogen mixture and expanded simultaneously with the bubble chamber.)

In summary, the bubble chamber described in this report will be an instrument of major importance for the study of neutrino interactions at high energy, which will be one of the most interesting research fields at NAL. Detailed studies have demonstrated the unique value of this new chamber for both qualitative and quantitative neutrino research, which will of course also be a very suitable device for exploring strong interactions in the new domain of energy made available by the 200-Bev accelerator.

2. NEUTRINO EXPERIMENTS IN THE 25-FOOT BUBBLE CHAMBER

A group of scientists at the 1969 Aspen Summer Study considered neutrino experiments with emphasis on the capabilities of the 25-foot chamber. As indicated in their paper,[3] they find the 25-foot chamber an extremely powerful tool with which to study neutrino interactions at high energies.

The following assumptions were made.

1) 2×10^{13} protons/pulse on the target.
2) The neutrino spectrum given by Nezrick and Kang (Fig. 2).[5]
3) 1.8-meter beam radius.
4) One million picture exposure.
5) The following bubble chamber arrangements -
   a) 25-foot chamber filled with hydrogen, deuterium, or neon (21-foot track length in fiducial volume),
   b) 25-foot chamber with a diaphragm after 14 feet, the front part being filled with hydrogen or deuterium (10-foot track length in fiducial volume) and the back part with 50% neon-50% hydrogen (8-foot track length in fiducial volume).

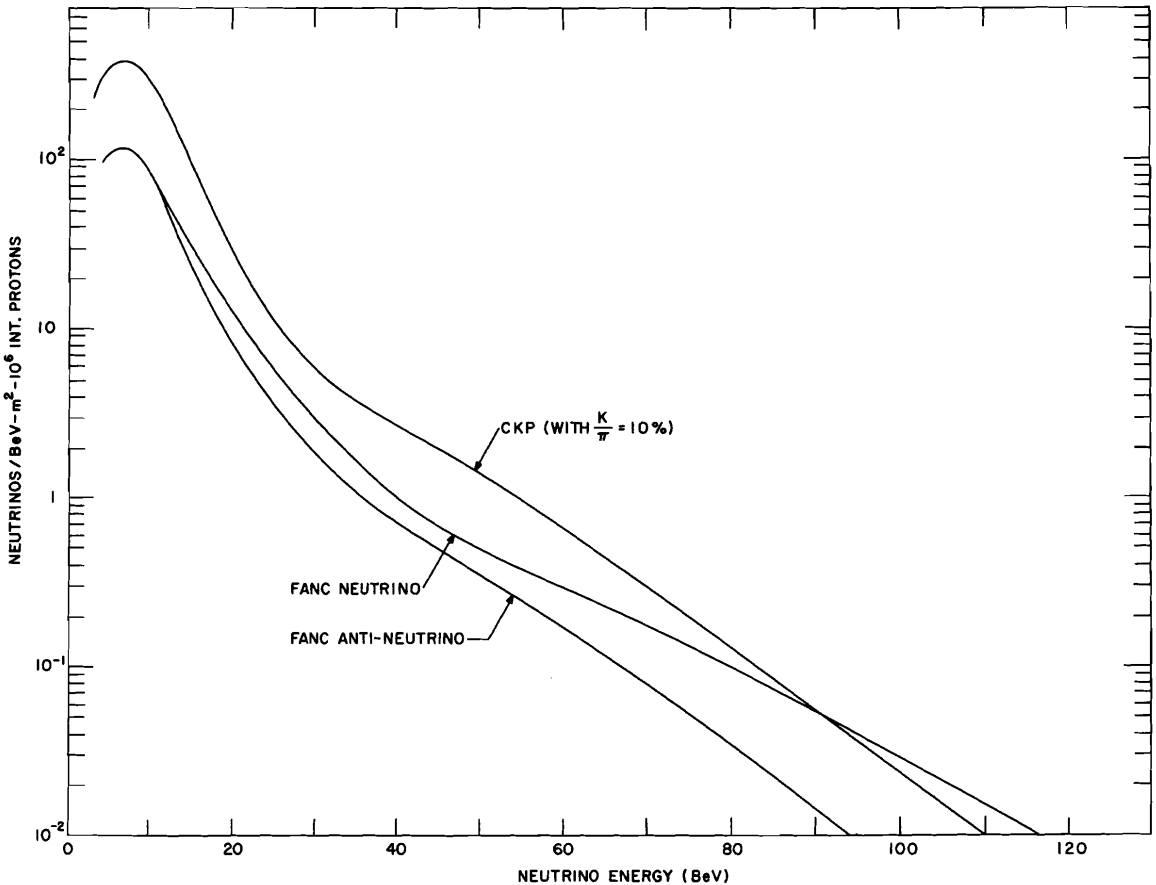

Figure 2. Neutrino Energy Spectrum

Their calculated number of events expected for 10^6 pulses in the 25-foot chamber as a function of neutrino energy, and according to the previous assumptions plus an assumed cross section of 10^{-38} cm^2/nucleon with only one kind of nucleon (n or p, but not both) participating, is given in Table I.

The experiments were grouped as follows, depending on chamber arrangement and the type of beam:

Double chamber† and normal (full spectrum) beam

- Inelastic cross section (Bjorken-type analysis)
- W ("intermediate boson") search
- Adler ("current conservation") test
- Production of hyperons by antineutrinos and selection rule tests
- Vector meson production

Hydrogen/deuterium and low energy beam

- Elastic cross section, N^* ("nucleon isobar") production, hyperon production

Neon filling with lead plate and high energy beam

- Lepton pair production

A feature here over previous reports is the reliance on neon and on the double-chamber technique for the bulk of the experiments. It was concluded by this Aspen Summer Study group that the 25-foot chamber operated in a double-chamber mode would be a very useful instrument. Especially because of this recommended mode of operation, the size of the 25-foot chamber is badly needed, and they felt that development of the double-chamber technique should be pursued vigorously.

The neutrino experiments considered were also classified into three catagories.

<u>Experiments feasible in bubble chambers and unique to that technique or very competitive with counter techniques</u>:

- Total cross section
- Inelastic cross section

†Internal track-sensitive target, as defined on page 7. Use of two liquids separated by a diaphragm is another variation of this technique.

Table I. Neutrino and Antineutrino Events per Million Pictures

	Neutrino				Antineutrino			
Bev/c	Flux	21-foot H or D Events	10-foot H or D Events	8-foot 50% Neon 50% Hyd.	Flux	21-foot H or D Events	10-foot H or D Events	8-foot 50% Neon 50% Hyd.
5-10	1000	4.6×10^4	2.2×10^4	8.8×10^4	360	1.6×10^4	7.9×10^3	3.2×10^4
10-15	650	2.9	1.4	5.6	285	1.3	6.2	2.4
15-20	210	1.0	0.5	1.8	75	3.4×10^3	1.6	0.6
20-25	65	3.0×10^3	1.4×10^3	5.7×10^3	23	1.0	5.1×10^2	2.0×10^3
25-30	25	1.2	0.5	2.2	10	4.7×10^2	2.2	0.8
30-35	13.5	6.3×10^2	3.0×10^2	1.2	4.2	2.0	0.9	3.7×10^2
35-40	8	3.8	1.8	7.2×10^2	1.9	0.9	4.2×10^1	1.7
40-50	10	4.6	2.2	8.8	2.1	0.9	4.6	1.8
50-60	5.5	2.6	1.2	4.8	1.0	4.8×10^1	2.2	0.9
60-70	3.0	14.0×10^1	6.6×10^1	2.6	0.6	2.8	1.3	0.5
70-80	1.4	6.4	3.0	12.0×10^1	0.3	1.4	0.6	2.6×10^1
80-90	0.5	2.4	1.0	4.4	0.1	4.5	2.2	0.9

W search

Adler test

Tests of selection rules

Vector meson production

Experiments feasible in bubble chambers at NAL but also able to be done at other accelerators:

Elastic cross section

N^* production

Hyperon production form factors

Experiments very difficult for the bubble chamber (and also very difficult by counter techniques):

Lepton pair production

Neutrino electron scattering

Neutrino proton scattering

More detailed descriptions of some of these possible experiments are to be published in the 1969 Aspen Summer Study report.

3. STRONG INTERACTION PHYSICS IN THE 25-FOOT BUBBLE CHAMBER

A group of scientists at the 1969 Aspen Summer Study considered strong interaction physics experiments using the 25-foot bubble chamber. As indicated in their paper,[4] they conclude that a large 25-foot-type bubble chamber is needed at NAL for the study of strong interactions. The paper also includes a list of important physics experiments proposed for use of the chamber. It is assumed that sufficient precision can be achieved in the 25-foot chamber to enable answers to be found for many of the physics questions posed.

The strength of the bubble chamber technique has been its ability to study reactions containing a wide spectrum of final-state particles and to provide a complete kinematic analysis in a relatively bias-free manner. These features have made bubble chamber exposures important even though a technique using triggering is capable of greatly increased statistics. This will be particularly significant at NAL when attempting for the first time the exploration of new energy regions and phenomena.

The chamber design allows its use as a target of hydrogen, deuterium, or neon-hydrogen mixtures. Also, it was assumed that the chamber would be used with large track-sensitive targets surrounded by dense neutral particle detection liquids. Spatial resolutions well under a millimeter seem possible, and this is important for many experiments. Setting errors approaching 50 microns have been obtained in chambers, and it is hoped that in the 25-foot chamber the setting error might be of the order of 250 microns. This spatial resolution is important for short-lived reaction products and for the detection of short-range recoils and "spectator" protons in deuterium exposures. It also provides precise track ranges. The chamber is an isotropic detector over the complete 4π solid angle. The magnetic field is sufficiently high that momenta are determined to the extent that angle errors dominate the determination of needed quantities. Here the small setting errors reduce the angular uncertainties. Ionization can also be measured, as bubble density, to help in particle identification. Furthermore, particles with energies of the order of 1 Bev are trapped in the magnetic field of such a large volume. While a triggered technique could greatly increase the statistics in one of the many channels (very often at the price of increased systematic error) an attempt to cover more than a few of the channels would dominate use of the accelerator, when for most exposures the bubble chamber can run parasitically with a small fraction of the beam.

The chamber will also be extremely versatile in the use of track-sensitive target chambers surrounded by neon-hydrogen mixtures. Using this technique, missing neutral particles can be determined with high efficiency at almost a 4π solid angle. This is especially useful at the high energies where very probable production of neutrals would prevent analysis in pure hydrogen or deuterium or in smaller chambers. Typical of the interesting ways this neutral detection could be used, even in 4-constraint events, is the reduction obtained in the hundreds of thousands of events that would not have to be measured by using the neutral detection in the neon-hydrogen mixture as an anticoincidence at the scanning level. Furthermore, delta-ray analysis in neon allows separation of protons and K-mesons up to several Bev.

In summary, the advantages peculiar to a large chamber are:

1) The detection of neutral particles by use of its sheer size or the use of heavy liquids.

2) The possibility of a variety of track-sensitive target materials and shapes.

3) The scope of beta-ray and ionization analysis.

4) The use of long lengths in momentum measurement in analysis of special situations where the errors are not limited by angles.

5) The availability of an enormous mass as a target.

4. INTERNAL TRACK-SENSITIVE TARGETS

A number of scientific reports[3,4,6] from the 1969 Aspen Summer Study expressed the desirability of operating the 25-foot bubble chamber with an internal track-sensitive target. As also defined in part (1), this technique uses an inner chamber filled with hydrogen or deuterium surrounded by a hydrogen-neon mixture, with both regions made sensitive simultaneously and with the ability to photograph tracks in both regions. Another variation where the chamber is divided by a diaphragm is also referred to as a double-chamber technique.

At present, development of track-sensitive targets is being carried out at BNL and other laboratories in smaller chambers. Successful operation of a 5-inch-diameter, 20-inch-long inner chamber in the BNL 30-inch bubble chamber has already been achieved. An inner chamber 8 inches in diameter and 60 inches long is now being designed for high energy experiments in the BNL 80-inch bubble chamber.

Design of an inner chamber for the 25-foot, in particular its method of expansion, awaits progress in the development program for smaller targets. Some of the considerations which have been given to operation of the 25-foot chamber with hydrogen-neon mixtures include designs that facilitate easy insertion of inner chambers and operation in the two-chamber configuration. Effects on the design are: (1) A 72-inch-diameter hole has been provided at the top of the chamber for inserting targets; (2) The aspect ratio (length/width) of the chamber was selected partly on this basis; and (3) The chamber is able to be used at the higher pressures and higher densities involved with hydrogen-neon operation.

5. MEASUREMENT PRECISION

Various authors (Thomas, Turner, Walker,[7] and others) have considered the scaling to large chambers of various factors affecting the precision of reconstruction of tracks. Some estimates of the effective setting error (ϵ) for large chambers have been rather pessimistic, but these estimates are based on assumptions of uncertain validity. The sources of measurement error are not known in complete detail for any of the existing chambers. In general, current chambers have a setting error of approximately 30 microns (about 2 microns on film) in small local regions of several centimeters in space, but systematic effects such as overall liquid motion in the chamber, optical effects of temperature variations, lens and window distortion, and errors in optical parameters and magnetic field values used in geometrical reconstruction increase this by several times over large scale distances of the order of 1/2 to 1 times the chamber size. The scaling of these numbers to large chambers leads to pessimistic predictions of 1000 or more microns in space for the effective large scale accuracy. It is probable that 1 micron on film (or about 70 microns in space) is obtainable for the small scale precision in large chambers. The long range precision may be many times worse, but errors can be minimized by use of the best measurement techniques. Measurements of many fiducials located over the field of large scale measurements, or measurement of known comparison (or calibration straight lines) may allow a differential measurement of track images. Such a technique will hopefully take out much of the distortion due to liquid motion. More careful corrections of systematic distortions due to lenses, etc., than currently done will be necessary. Thus precisions comparable to those currently available may be hoped for, although at the expense of considerably greater effort. Test results from the 7-foot chamber at BNL and from the European 1-meter model chamber show good optical quality and indicate that good precision should be obtainable.

Good precision is required for high energy interactions since the necessary mass resolution requires high accuracy in the angle measurements. The mass resolution dM/M is a function of the momentum accuracy dp/p and angle accuracy $d\theta/\theta$. A typical momentum accuracy of about 1% is

obtainable with fields of 20 kG or more; however, $d\theta/\theta$ will be worse than 1% unless high angular accuracy is obtained. This is due to the fact that at higher energies angles of 10 mrad will become common, as compared to our usual experience at present-day accelerators where angles are typically several hundred milliradians. Thus an angular accuracy of a few tenths of a milliradian is required. The angular accuracy $d\theta$ is approximately 5 ε/L which requires an effective large scale ε much less than 50 microns for lengths (L) of several meters in order to do physics in the 50- to 100-Bev/c region. For example, a 100-Bev/c K^o decaying into two 50-Bev/c pions will have an opening angle θ = 10 mrad. An ε = 100 microns and a L = 2.5 meters for each pion track will give an angular accuracy $d\theta$ = 0.2 mrad. Thus dM/M will be measured at best to 2% (the value of $d\theta/\theta$). In other words, dM will be $\pm$ 10 Mev corresponding to a full width at half maximum of about 25 Mev for the K^o peak. Such resolution should be adequate, although it is not as good as that obtained with present chambers at low energies.

A preliminary measurement of a cosmic-ray track obtained in the October 29, 1969 run of the 7-foot chamber at BNL has been made using the Brookhaven Flying-Spot-Digitizer automatic measuring machine. A particular track of length 12.6 mm on film and corresponding to $\sim$ 76 cm in space was read by the FSD every 68.1 micron on film. The standard least count of the FSD perpendicular to the track is 2.11 microns, again on film. The rms deviation of the track position from a straight line was 4.2 microns for each individual digitizing by the FSD.

This error reduces to $\sim$ 1.4 micron rms at a level of the data processing program which gives information on the detailed geometry of any particular event. Due to the 60X demagnification for this track in the 7-foot we find an error which is very similar to the measurement accuracy for the BNL 80-inch chamber. If other tracks obtained in routine operation of the 7-foot sustain the quality exhibited by this "early-run" track, the hoped for measurement accuracy referred to in this and other sections of the report seems assured.

national accelerator laboratory

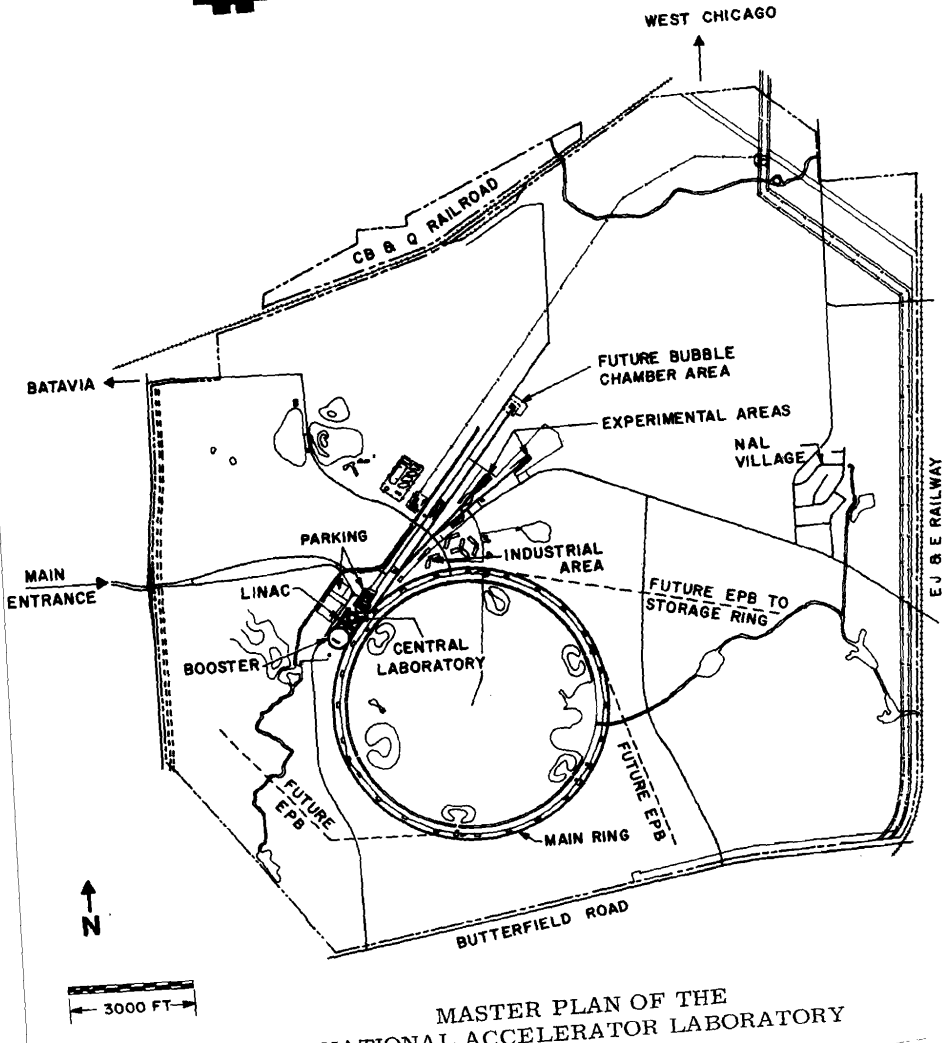

6-1-

MASTER PLAN OF THE
NATIONAL ACCELERATOR LABORATORY

Operated by the Universities Research Association Inc. for the U.S. Atomic Energy Commission.

Figure 3

3. Summary of Report

1. GENERAL

The master plan for the National Accelerator Laboratory is shown in Fig. 3. The three principal components of the 200-Bev accelerator are the main ring, the booster, and the Linac. After the protons have been accelerated to full energy they are extracted and transported to target stations in the experimental areas. One of these stations provides beams to the 25-foot bubble chamber, whose location with respect to the accelerator is shown in the figure. Beams of neutrinos and charged particles will be formed and caused to enter the chamber, where interactions of the beam particles with the liquid hydrogen or deuterium nuclei can be studied.

The 25-foot bubble chamber described in this report has been optimized for use with the 200-Bev accelerator. For purposes of discussion, the bubble chamber can be broken down into the following elements:

Chamber and vacuum tank
Expansion system
Refrigeration
Optics
Magnet
Instrumentation and controls
Conventional facilities

Each write-up contains a description of the system and the reasons for particular design choices. Included also are short specifications for major components.

Key bubble chamber parameters which affect the scope of the project and its physics research capability are:

Visible volume for three cameras, 68,000 liters
Maximum track length, 25 feet
Maximum chamber width, 18 feet
Optics ports, six
Average magnetic field, 40 kilogauss

Another important aspect of the bubble chamber is how it would be used during each accelerator cycle. Fig. 4 is a graph of the acceleration cycle of the main accelerator. To allow for multiple pulses of the booster accelerator to be injected into the 1-km ring, 0.8 sec is needed. The main accelerator requires 1.6 sec for acceleration to 200 Bev and 0.6 sec is used to return the guide field to its injection value. We see in the top graph a typical pulse for the case when the bubble chamber is using most of the intensity of the accelerator, such as in neutrino runs. Here we see that the bubble chamber pulses once every 3 sec. Note that when the top energy of the accelerator is increased to 400 Bev the bubble chamber cycle will be slowed to once every 6 sec. In the bottom graph the case of multipulse use of the bubble chamber is shown. Since charged particle beams will require only a small percentage of the full accelerator intensity, it should be possible to share this intensity between the bubble chamber and other users. We show here three bubble chamber pulses equally spaced during the one-second "flat-top" of the magnet cycle. Also indicated is the future 400-Bev cycle with four bubble chamber pulses.

2. SYSTEMS

2.1. Chamber and Vacuum Tank. The chamber body vessel which contains the cryogenic liquid has about 105,000 liters of volume, and its shape has been chosen to give an aspect ratio (length-to-width) of ~ 1.4. The trispherical membranes minimize the cost of materials and fabrication and give the most favorable geometry for the optics and expansion systems. The shape keeps the investment in the deuterium used for part of the bubble chamber research program to a value consistent with the rest of the experimental program's costs, as judged by relative physics justifications.

A 6-foot-diameter port is provided in the top of the chamber to allow for the insertion of internal track-sensitive targets when these devices become available in large sizes. A 52-inch-wide, 1/8-inch-thick beam window is provided to introduce highly pure charged particle beams into the chamber.

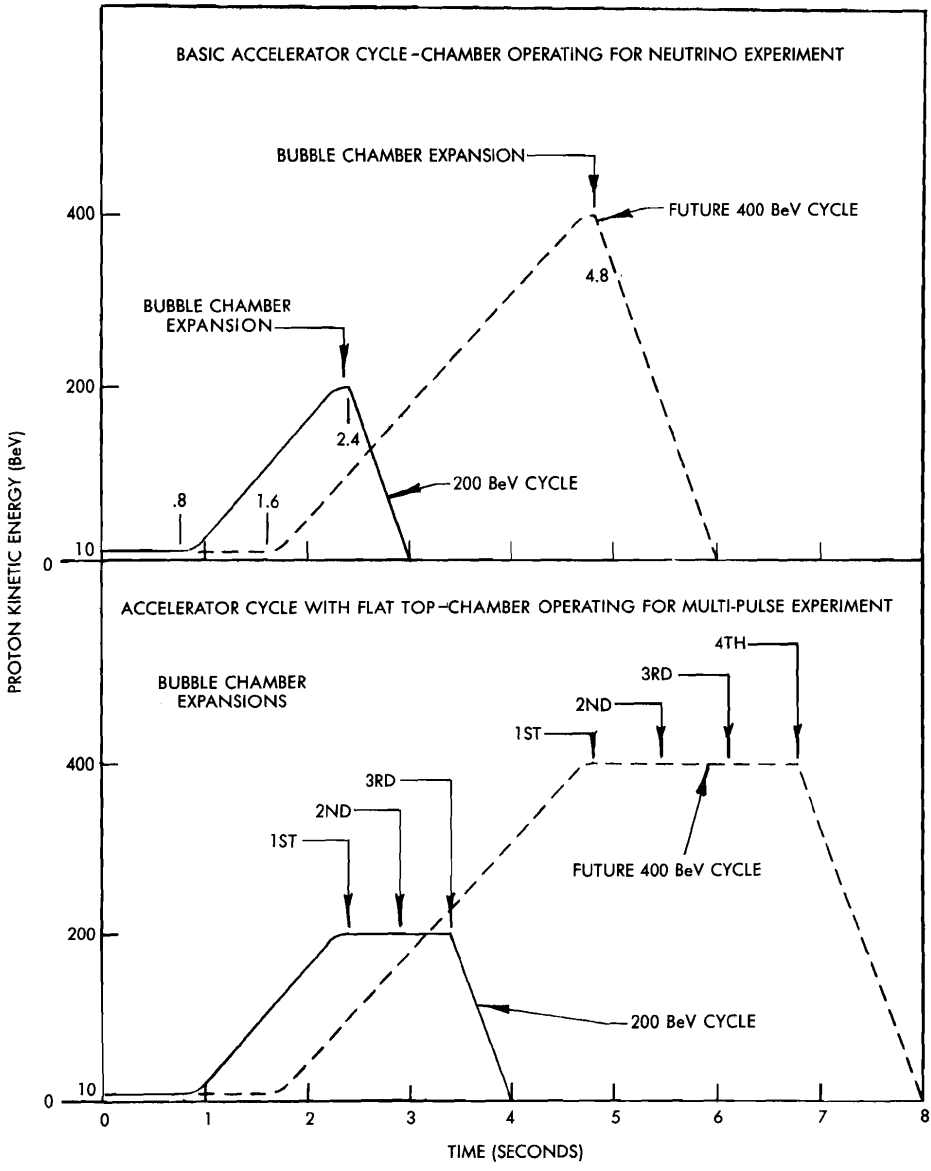

Figure 4. Acceleration Cycles

The vacuum tank for the 25-foot chamber is a spherical shell, 33 feet 6 inches in diameter, supported by six legs. This 9% nickel steel vessel provides an enclosure around the bubble chamber and superconducting magnet and must be evacuated to $\sim 10^{-5}$ mm of mercury in order to reduce heat loads to these components. Multilayer reflective insulation is applied to the refrigerated vessels inside the vacuum chamber to shield both the chamber and magnet coils from radiant heat gains. The vacuum chamber also serves as a protective enclosure in case of a component failure. A beam entry port, which is aligned with the chamber beam window and is 6 feet wide and 1 foot high, allows particle beams of various momenta to pass into the chamber with a minimum of material in the way. A 6-foot top access port matched to the chamber port facilitates servicing and internal track-sensitive target insertion. Also, an approximately full diameter flange aids assembly and maintenance of the coils and other major components.

2.2. Expansion System. The expansion system for the bubble chamber is required in order to produce a momentary increase of up to 1% in the volume of the chamber. This volume change reduces the chamber pressure and makes the liquid sensitive to the formation of bubble tracks by charged particles. The pressure change needed when liquid hydrogen is used is $\sim$ 50 psi. Particles are admitted at the time of minimum pressure, and bubble tracks are formed and photographed within a few milliseconds. The chamber is then brought back to equilibrium and the bubbles quench as the pressure rises. The expansion-recompression cycle typically lasts $\sim$ 80 msec or less. The expansion system is designed to produce a 1% volume increase which is believed to be adequate to make the chamber sensitive for neon-hydrogen mixtures. The expansion system is designed for the pulse sequence shown in Fig. 4. Expansion of the liquid in the chamber is accomplished by moving the 90-inch-diameter piston that is in contact with the liquid a distance of 10 inches. The piston is mounted at the bottom of the chamber in order to allow the piston area to be cooled as much as one to two degrees below that of the chamber. This should keep spurious bubble formation to a minimum. The piston is driven by a hydraulic actuator designed to meet the fast-response times of the

expansion system. Details of this actuator, which is patterned after the 7-foot drive unit, are given in section B.5, page 36.

2.3. Refrigeration. The low temperatures required for operation of the 25-foot bubble chamber are to be obtained with two refrigerators, since it is not economically feasible to purchase either liquid hydrogen or liquid helium for use as refrigerants in this case. A 20-kW hydrogen refrigerator is of sufficient capacity to cool and fill the chamber and is able to maintain the chamber at operating conditions both statically and dynamically during pulsing of the chamber. This unit also provides precooling for the helium refrigerator and other miscellaneous cooling requirements. The helium refrigerator is sized at 2000 watts. Enough capacity is required to cool the magnet coils from room temperature to liquid helium temperature ($\sim 4.8^{\circ}K$). In addition, during magnet operation a supercritical helium flow system keeps the magnet well below the superconductor's critical temperature, thereby insuring that the magnet conductor remains superconducting. The detailed refrigeration requirements are listed in section B.6, page 42, and outline specifications of major equipment are also presented. Flow schematics have been prepared for the hydrogen and helium refrigeration systems, the chamber fill-vent piping and instrumentation, and the main vacuum systems. Since one of the crucial systems for operation of the chamber is the refrigeration system careful attention is needed here to be sure of utmost reliability.

2.4. Optics. The optical system is used to photograph the bubbles produced along the path of charged particles passing through the chamber liquid. In order to make possible high precision stereo reconstruction of the relative position of tracks in the chamber from the information on the film, three cameras are ordinarily used. Each camera looks into the chamber through three spherical windows which seal the chamber liquid inside the chamber body and seal the chamber vacuum tank; the third window provides thermal radiation shielding. In order to record the track images on the film, it is necessary to illuminate them, and since hydrogen bubbles scatter light only through a very small angle, the light illuminating the bubbles must be directed toward the cameras. As in

other very large volume bubble chambers, the light is brought through the small camera windows and reflected back toward the cameras by a special type of Scotchlite made by Minnesota Mining and Manufacturing Company. In fact, it is the availability of this material with its peculiar properties which makes possible the optical system used here, and this is perhaps the most important factor which makes possible the design of cryogenic bubble chambers with volumes in the range of 10,000 to 100,000 liters. The design contains six camera ports equally spaced around a circle of 9.2 feet in diameter. Each camera views 130° of angle, giving for the normally used three views 68,000 liters of "visible" chamber volume. The other three ports are provided to give flexibility in selection of camera positions such as might be required for the use of track-sensitive targets.

2.5. Magnet. The most expensive system for the 25-foot bubble chamber is the magnet, even though this design utilizes the most advanced techniques for generating the average magnetic field of 40 kG throughout the bubble chamber. This field value, which directly influences the cost, is necessary to make precision momentum measurements when using neon-hydrogen mixtures in the chamber. The air-core design eliminates the costly iron yoke that is typical of conventional bubble chamber magnets, and the higher stray fields have been shown by the 7-foot chamber tests to be tolerable. The use of superconductor keeps resistive losses in the magnet to essentially zero, and therefore very large savings will accrue over the years when the magnet is to be used. Offsetting this is the helium refrigeration operation cost, but this is only a very small amount in comparison. Other design features include a common vacuum tank for the chamber and magnet, coil separation of 5 feet to allow for particle beam entry to the bubble chamber, and a hollow stabilized superconducting conductor cooled by an internal flow of cold helium. Since at present there are uncertainties in the cost of hollow superconductor an alternate strip-conductor design has been considered, and sufficient funds are included in the cost estimates to permit construction of a strip-conductor magnet and associated helium dewar, similar in concept to the 7-foot chamber magnet which has been constructed and tested at Brookhaven.

2.6. Instrumentation and Controls. Information concerning the instrumentation and control system needed for operating the bubble chamber with ease and efficiency as well as with maximum safety is given in section B.9, page 100. The central control room concept is used where the chamber operator is provided with monitor and control equipment to handle all operational activities in both routine and emergency situations. Since the technology changes perhaps most rapidly in this area, it is important to take full advantage of newly available equipment.

2.7. Conventional Facilities. The strongest interaction of the bubble chamber design with the NAL accelerator occurs with the conventional facilities. Here considerations concerning beam elevation, chamber position, and various other interface problems are of prime importance. This report develops a plan for installation of the 25-foot bubble chamber on the NAL site that is consistent with accelerator construction and design. As the accelerator experimental areas are further perfected, it may be necessary to adjust the bubble chamber installation; however, we are confident that this can be done within the present scope. The schedule calls for starting detailed design of the conventional facilities 1-1/2 quarters after detailed design of the chamber, in order to allow sufficiently firm input data for the conventional facilities to be forthcoming. This should match well the beam design and experimental area planning underway at NAL.

2.8. Safety. Considerations that have gone into making the chamber design as safe as is reasonably possible are discussed in Chapter D. Hydrogen and oxygen gas mixtures have wide flammable limits, and since hydrogen is used in several areas of the chamber the possibility of it mixing with air needs careful attention. The proposed chamber would contain about 100,000 liters of liquid hydrogen, hydrogen gas will also be used in compressor room equipment, and outdoor areas will have liquid hydrogen and hydrogen gas lines and dewars. Every precaution is taken to prevent hydrogen gas from escaping in order to eliminate the primary hazard. Maximum safety is best assured by utilizing sound design practices and eliminating possible ignition sources. In addition, explosive gas detection equipment coupled with automatic hydrogen emergency ventilation

is necessary to minimize hazards. Further details to assure adequate safety are also given. A future safety analysis program outline is presented.

2.9. Costs and Schedules. The construction cost of the 25-foot bubble chamber is estimated to be $15,000,000. Of this, hardware costs are $9,600,000, manpower costs are $2,600,000, and $2,800,000 is reserved for contingency. Also needed is $4,600,000 for deuterium and $500,000 for beam costs directly associated with the bubble chamber.

It is planned to have the bubble chamber in operation by June 1973; as close to start-up of the accelerator as is possible with the assumed funding schedule. It is estimated that a staff of approximately 47 people will be required for operating the chamber, involving an annual budget of $2,600,000, which has been included in estimates of the NAL operating program.

References

1. Report on High Energy Physics, June 1969. High Energy Physics Advisory Panel, U.S. Atomic Energy Commission, Division of Research, Wash., D.C.

2. 14-foot Cryogenic Bubble Chamber Project Title I Report, December 1, 1966, BNL 10700; Scaling Studies of Large Cryogenic Bubble Chambers, BNL Bubble Chamber Group, April 1, 1969, BNL 12336; 25-foot Cryogenic Bubble Chamber Proposal, March 1969, BNL 12400.

3 B. Roe, et al., Neutrino Experiments in the 25-foot Bubble Chamber, 1969 NAL Aspen Summer Study Report SS-104.

4. C. Baltay, et al., Strong Interaction Physics in the 25-foot Bubble Chamber, 1969 NAL Aspen Summer Study Report SS-140.

5. An explanation of the models used in Fig. 2 may be found in the following: Neutrino and Antineutrino Flux Using the Empirical Pion and Kaon Spectra by Y. Kang and F. Nezrick, 1969 NAL Aspen Summer Study Report SS-142. CKP is the model proposed by G. Cocconi, et al., UCRL-10022, 1961. FANC is a semiempirical model as proposed by G. Cocconi in NAL Aspen Summer Study Report SS-61, 1969.

6. V.P. Kenney, Neon-Hydrogen Mixtures and Track-Sensitive Targets for Bubble Chamber Experiments at NAL, 1969 NAL Aspen Summer Study Report SS-24; F.R. Huson, Track-Sensitive Targets in the 25-foot Bubble Chamber, 1969 NAL Aspen Summer Study Report SS-90.

7. L.R. Turner, Limits of Track Location Determination in the 12-foot Hydrogen Bubble Chamber, ANL-BBC-110, July 1967; W.D. Walker, Difficulties with Large Bubble Chambers, NAL Aspen Summer Study Report SS-10; D.B. Thomas, Optical Distortions in Bubble Chambers Arising from Turbulent Convective Motions, Proceedings International Colloquium on Bubble Chambers, Heidelberg, April 1967. CERN67/26, Vol. 1, p. 215.

DESCRIPTION OF BUBBLE CHAMBER SYSTEMS

B. DESCRIPTION OF BUBBLE CHAMBER SYSTEMS

4. Chamber and Vacuum Tank

1. FOREWORD

Subsequent to the submission of the Proposal,[1] the design parameters of the 25-foot chamber body were reviewed. The characteristic length of 25 feet represents the optimum length for physics experiments at the National Accelerator Laboratory. The construction using three spherical sections with a beam window projecting between the magnet halves provides the 25-foot length and makes efficient use of the chamber volume. The chamber volume has been kept at about 105,000 liters so that filling it with expensive liquids such as deuterium or neon-hydrogen mixtures will be economically feasible. If, for example, the chamber shape were changed to a 23-foot-diameter sphere to make better use of the volume containing most of the magnetic field, the capacity of the vessel would be 80% greater, but the increased cost of the expansion and refrigeration systems together with the increased liquid-fill costs may not be justified by a sufficient increase in usefulness of the larger volume chamber.

2. DESIGN

2.1. Chamber. The principal dimensions and design features are shown in Fig. 5. The top access port has been enlarged to 6 feet in diameter to allow for insertion of equipment which may be required for assembly or physics experiments. The shape of the beam entry port has been changed to a combination of a toroidal and two conical sections to facilitate support of the magnet halves against the very large electromagnetic forces. Although the design concept of a possible large internal target has not been developed sufficiently for inclusion of installation design features, the necessary flanges and penetrations may be added as a separate modification, if required.

The tentative shell thickness has been determined for a design pressure of 200 psi using, as a guide, Section III and Section VIII of the ASME Boiler and Unfired Pressure Vessel Code. The expected operating

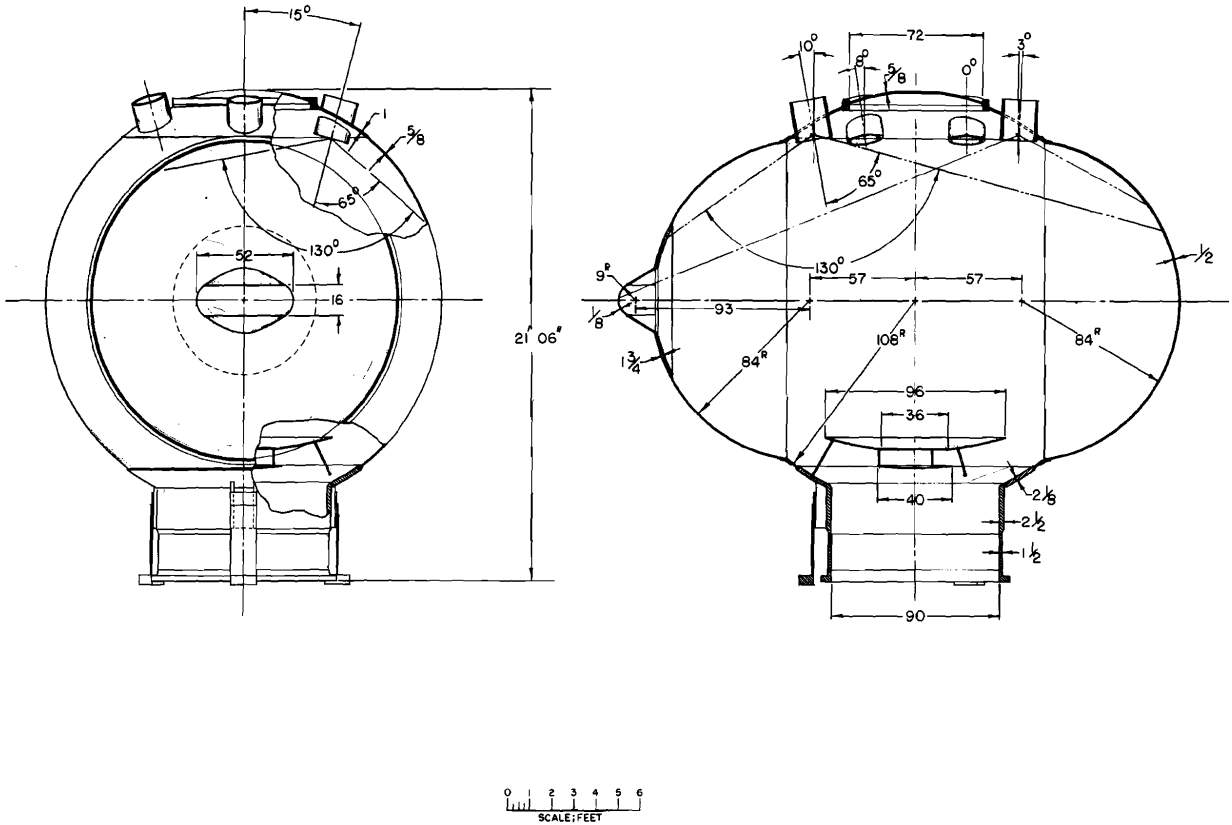

Figure 5. Chamber Vessel with Dimensions

pressures and the dynamic pressure ranges for the various fluids that are expected to be used in the chamber are given in Table II.

Table II. Chamber Operating Pressures With Various Cryogenic Fluids

Fluid	Equilibrium Pressure, psia	Pressure Drop, psi
H_2	80	55
D_2	95	50
50% Ne in H_2	120	60

Although the maximum expected operating pressure is 120 psia for the neon-hydrogen mixture, the higher value of design pressure is used to offset the effect of cyclic loading during expansion. In this manner, the design would conform to the requirements for cyclic loading under Section III, paragraph N-415 of the ASME Code. Reinforcement requirements at the junctions of the 14-foot- and 18-foot-diameter spheres have been determined by a discontinuity analysis of the joint. The resulting edge moments and shear are small in comparison to the membrane forces, so that minimal reinforcement is required at these joints. More detailed stress analysis and review by an independent consultant is planned as part of the detailed design effort for this vessel. This analysis will include, in addition, a calculation of the deflections and rotation of the optics ports caused by cyclic pressure loading and superimposed loads. Additional local reinforcement will be provided, if necessary, to increase rigidity.

The tentative material choice for the chamber is Type 316L stainless steel. This is based on the successful fabrications and cryogenic performances of the Brookhaven National Laboratory 31-inch, 80-inch, and 7-foot bubble chambers. It has been verified that this material has good low-temperature mechanical properties and can be readily welded in heavy sections with filler metal matching the composition of the base metal. The material also appears to have adequate stability against brittle phase transformation at low temperature, in view of the experience with the 80-inch and 31-inch chamber bodies which

have operated in a cryogenic environment for years without evidence of martensite transformation.

The fabrication requirements of the vessel, welding procedures, inspection, and testing will be done according to BNL-developed internal specifications which have been used for the fabrication of cryogenic pressure vessels for the 80-inch and 7-foot chambers.[2] The welding procedures in this case would comply with Section VIII of the ASME Code. Radiographic inspection and acceptance requirements would be done in accordance with the Code; however, additional requirements for liquid-penetrant examination of the root pass and faces of completed welds are also required. In addition, the specifications cover procedures for removal and repair of defects revealed by radiographic and liquid-penetrant examination.

Other materials are also being investigated which may have advantages over 316L for the chamber fabrication. One is a highly stable, high yield strength, stainless steel, Armco alloy 21-6-9. Weld specimens are being prepared for low-temperature tensile and impact tests of the deposited weld and adjacent base metal. This material has about the same base price as 316L plate, and therefore represents a potential cost saving because of its increased strength-to-weight ratio.

The use of Type 5083 aluminum is also being considered for the chamber as well as a replacement for low carbon, 9% nickel for fabrication of the vacuum tank.

2.2. Vacuum Tank. The vacuum tank is shown in the main assembly drawings and assembly isometric, Figs. 6, 7, 8, and 9. Design features that have been added since the Proposal was presented are a beam entry port, two-piece construction with a large-diameter flange, bellows-isolated support legs, and 6-foot-diameter top entry port to match the chamber.

The beam entry port has an aperture 1 foot high by 6 feet wide. The 6:1 aspect ratio has necessitated the use of an oval reinforcing ring in the spherical shell. A preliminary stress analysis has shown that a 2:1 aspect ratio, 50-inch-high ring provides adequate reinforcement

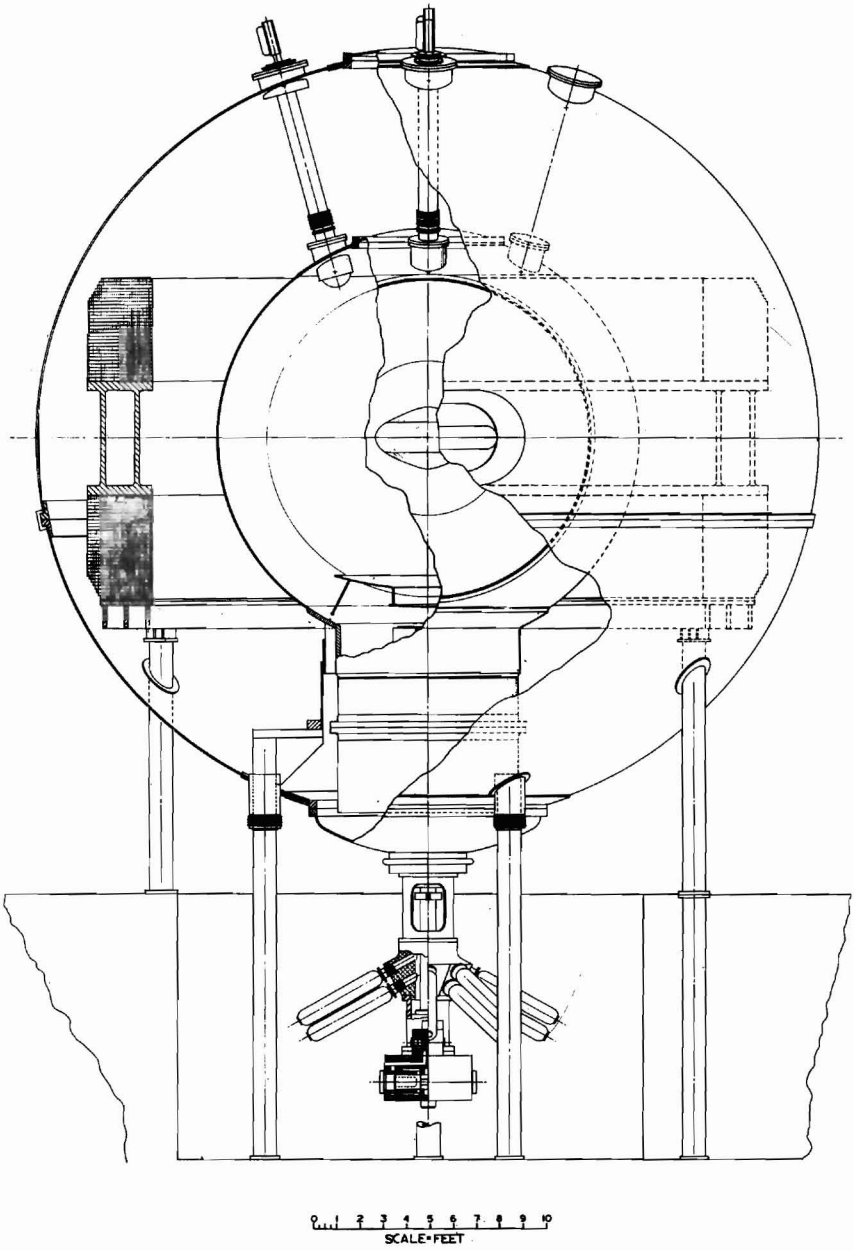

Figure 6. Bubble Chamber Assembly - Front View

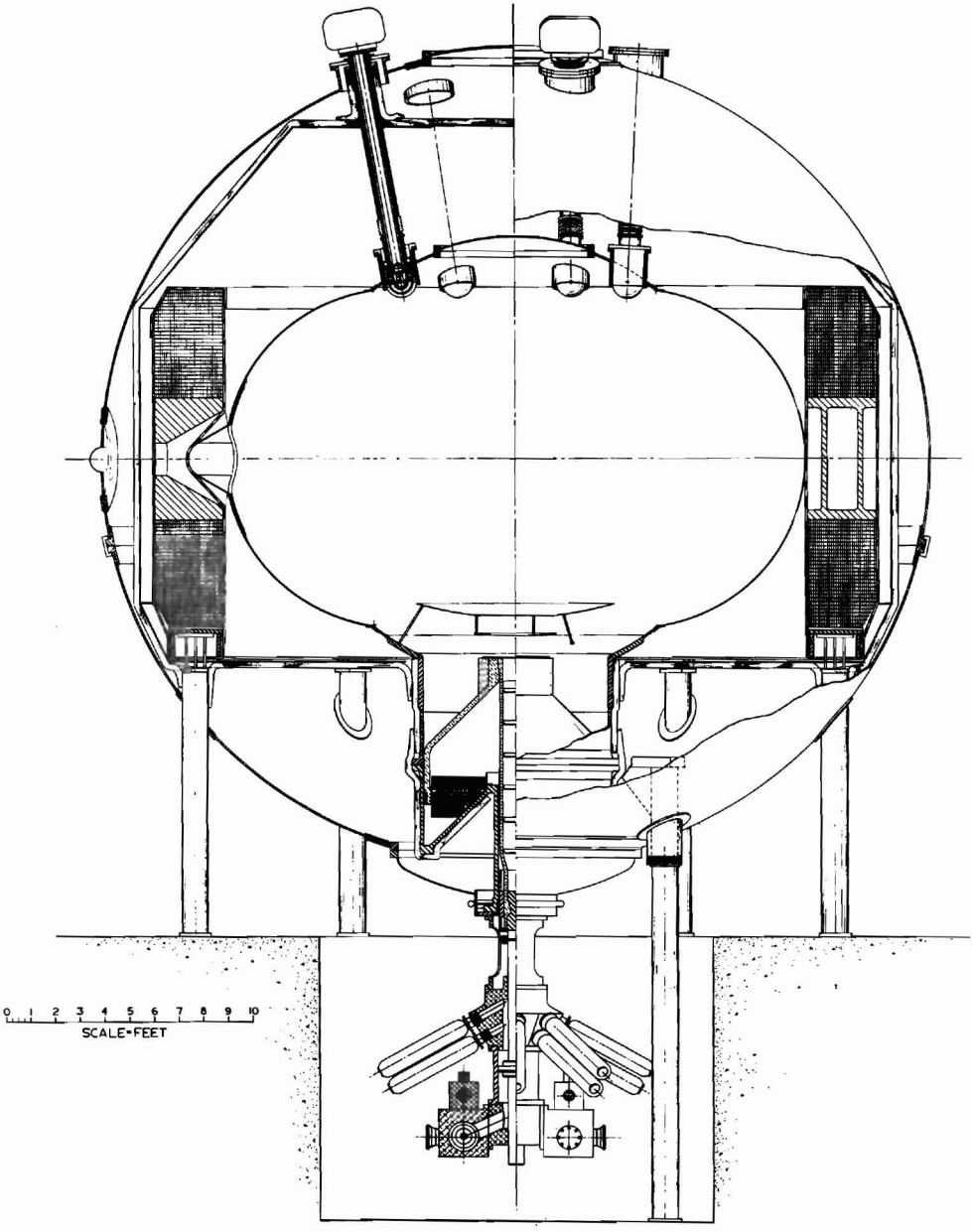

Figure 7. Bubble Chamber Assembly - Side View

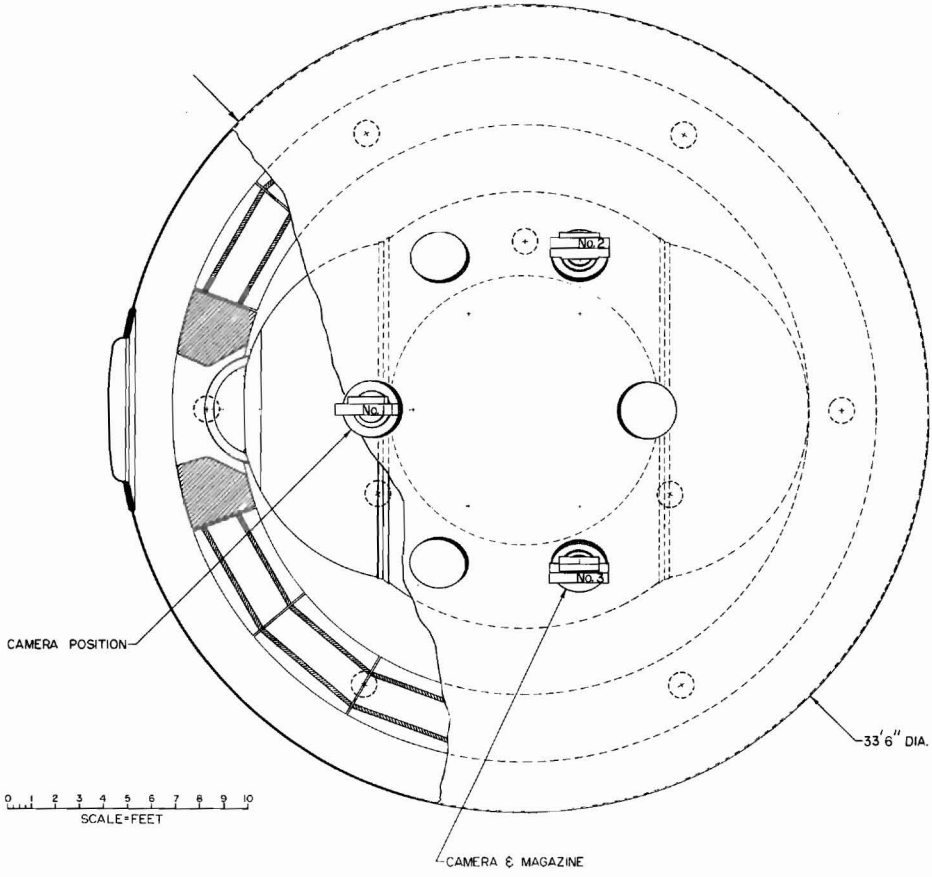

Figure 8. Bubble Chamber Assembly - Top View

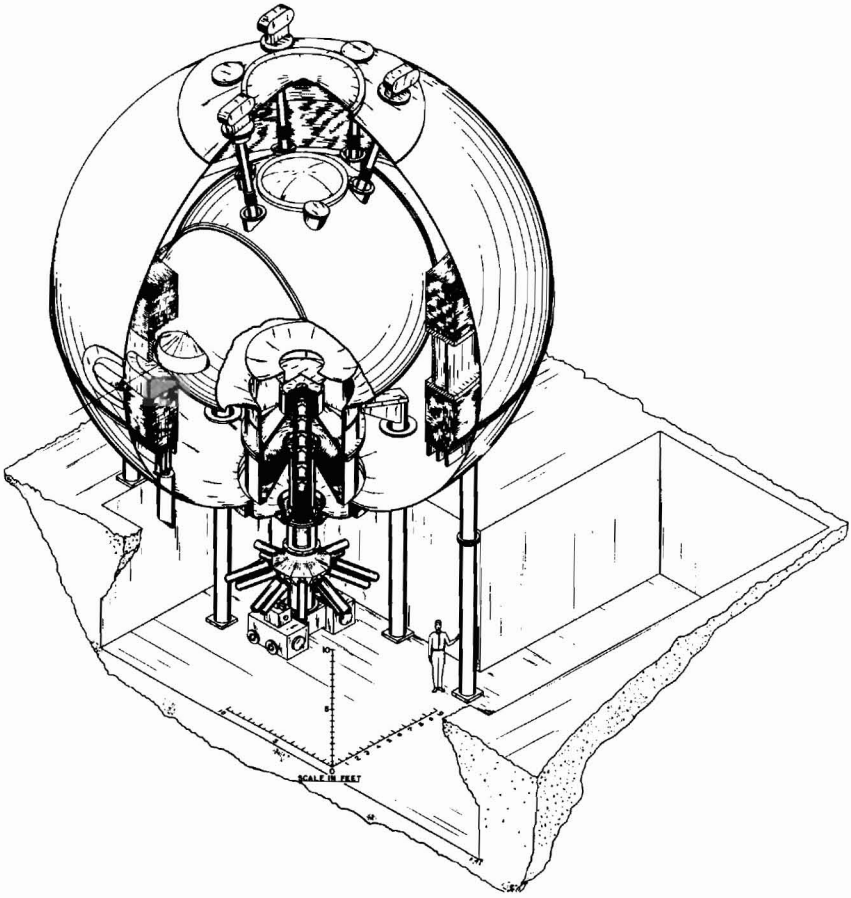

Figure 9. Bubble Chamber Assembly - Isometric View

for the low-carbon, 9% nickel material. In order to allow for the placement of this beam window configuration on the equator of the shell, the main vacuum tank flange has been placed below the equator as shown in the assembly drawings (Figs. 6, 7, and 8). By utilizing close-coupled clamps rather than bolts to hold the flange halves together, the flange rings have been kept small in section for an economical fabrication in the 33-foot diameter.

The vacuum tank and chamber support systems consist of six legs for the vacuum tank and magnet and three legs that support the chamber. In order to avoid superimposing dynamic deflections on the vacuum tank shell, the chamber legs are isolated from it by a bellows at each of the three penetrations. In addition, a bellows is required at the penetration of the expansion system piston shaft through the vacuum tank to account for differences in thermal contraction.

3. FABRICATION

Discussions were held with prospective vendors on the fabrication of the chamber and vacuum tank. This provided a comparison of a field-fabrication procedure and a shop-fabrication method using components of maximum transportable size. The shop-fabrication procedure involved a survey of transportation routes from an East Coast shop to the NAL site. The recommended method was to ship by barge to New Orleans, then up the Mississippi River to the Des Plaines River, and off-load at Joliet, Illinois. It was proposed to build the chamber in three pieces; the maximum width would then be 18 feet, which would be shipped by truck as an oversized load to NAL from the barge-unloading point at Joliet. The vacuum tank would be fabricated in five pieces for the upper section and three pieces for the lower section. The three chamber support legs would be included as a pre-assembly in the vacuum tank bottom piece and the six support legs for the vacuum tank would be field-installed.

The field-fabrication procedure was estimated to be simpler and lower in cost. Thus the decision has been made to proceed with the design and specifications on the basis of a primarily field-erected structure.

5. Expansion

1. FOREWORD

In order to make the chamber liquid sensitive to the formation of bubble tracks by charged particles, a momentary expansion of up to 1% of the chamber liquid volume is required. The chamber liquid is expanded and recompressed with a 90-inch-diameter, nonconducting, fiberglas-reinforced plastic piston which produces a fundamental time of about 0.08 sec for the expansion-recompression cycle. The decision to use the 0.08-sec cycle is based on the requirements for a bubble diameter of about 1 mm in hydrogen and uniform expansion in all parts of the visible volume. The time necessary for bubble growth is estimated at 0.005 sec in hydrogen and may be longer in deuterium or neon-hydrogen mixtures.[3] Also, the time required for a pressure wave to travel from the piston to all parts of the visible volume is about 0.005 sec. Thus an 0.08-sec cycle time would be adequate for bubble growth in the visible volume at the expanded pressure. If required, 50% additional spring constant can be added to the hydraulic system to reduce the cycle time to 0.06 sec.

2. DESIGN

The principal design features of the expansion system are shown in Fig. 10. The nonconducting, fiberglas-reinforced plastic piston is similar in design to that used in the BNL 7-foot bubble chamber. The structural integrity of this component in liquid hydrogen has been verified in pulsed operation in the 7-foot bubble chamber. The design criteria used for the construction of the piston will be based on the 7-foot design, that is, it must withstand a cyclic pressure difference of 100 psi for at least 10^7 cycles and a static pressure difference of 300 psi at -423°F. The allowable tensile-stress values for fatigue loading for the Type 181 glass cloth impregnated with Epon 828 resin at -423°F are as follows:[4]

Lengthwise (warp direction)	-	22,000 psi
Crosswise (fill direction)	-	20,800 psi
Thickness direction (compressive)	-	24,500 psi
Interlaminar shear	-	2,740 psi

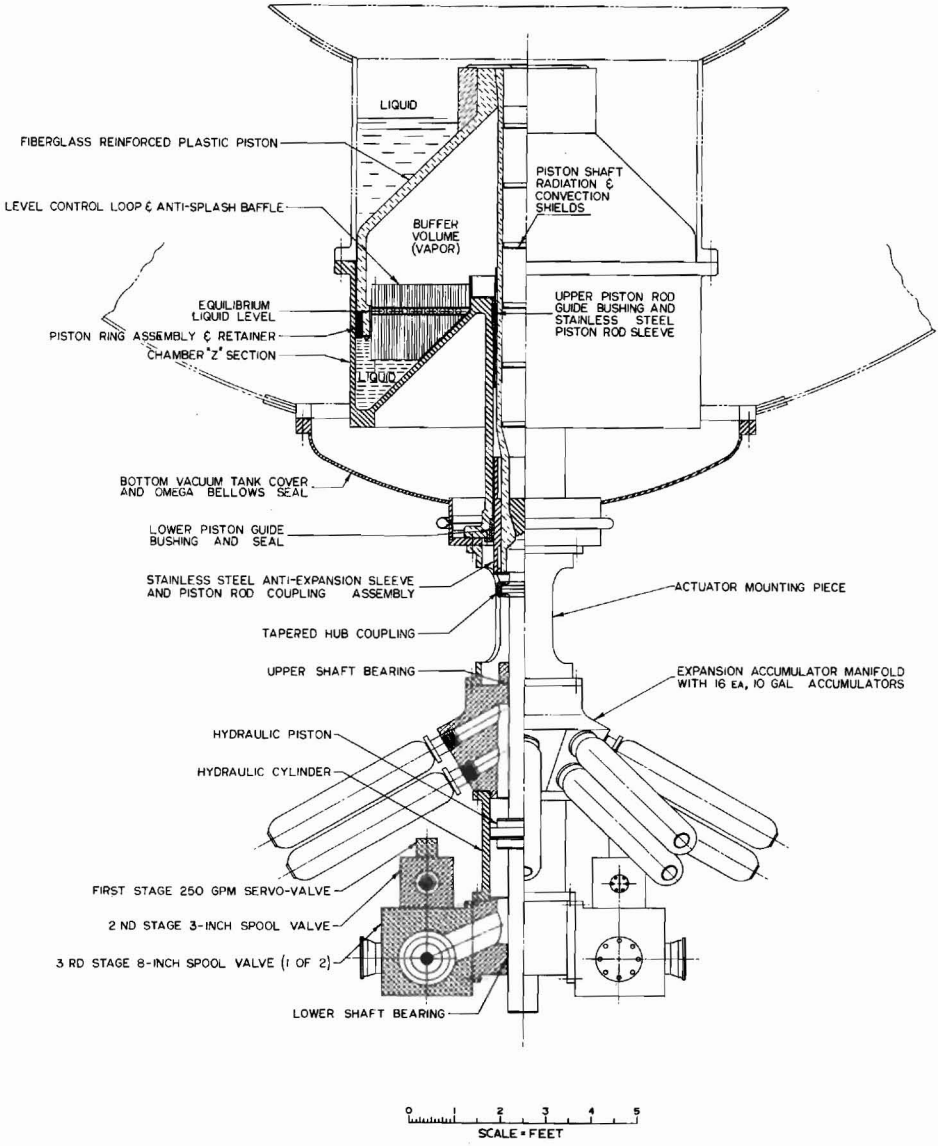

Figure 10. Cross Section of Expansion System Assembly

The piston is designed in such a way that the load seen by the piston shaft is transmitted to the piston skirt by means of a tapered wedge joint which is pre-loaded in compression by a 5-inch-thick layer of filament-wound material. The lower end of the piston undergoes a transition to a stainless steel coupling by means of another tapered wedge joint in the fiberglas which is reinforced in the radial direction by means of a stainless steel sleeve. This sleeve also serves as a bearing and seal surface. The coupling to the hydraulic actuator is made with a tapered hub joint rather than a threaded connection for ease in assembly and greater resistance to deformation under load.

The proposed piston ring design uses a continuous high-density polyethylene ring similar to that on the 7-foot chamber piston. The relatively thin polyethylene ring is mounted on a filament-wound fiberglas back-up ring. It has been verified experimentally, using 7-foot chamber components, that the filament-wound ring shrinks approximately one-third as much as stainless steel from room temperature to -320°F. Thus the initial piston-ring diameter must be such that there is adequate clearance with the cylinder when the ring is warm. For example, the dimensions for the 25-foot chamber piston, assuming a cylinder diameter of 90.000 inches, would be such that the initial diametral clearance would be 0.150 inches, which would diminish to 0.002 inches at operating temperature.

The piston assembly is mounted in the chamber "Zee" section which also contains a liquid-level control loop and antisplash baffle. These components are again similar to those used in the 7-foot chamber. The baffle is a fiberglas honeycomb unit which prevents liquid from being splashed on warm surfaces during operation. The level-control loop is placed in the antisplash baffle at the equilibrium liquid-level position. Level control with this type of arrangement has been verified during operation at the 7-foot chamber.

The hydraulic actuator, which provides the force necessary to expand the chamber, has been based on design experience with the 7-foot chamber actuator, with the incorporation of certain improvements. For the 25-foot chamber, the actuator is driven by two 8-inch-diameter spool

valves mounted on opposite sides of the actuator bottom bearing block. Each 8-inch valve is driven by a 3-inch, 4-way spool valve, which is in turn controlled by the first stage, a commercially available 250-gpm electro-hydraulic servo valve. A schematic view of this high-response valve assembly is shown in Fig. 11. The 8-inch valve has a 3-way spool configuration which operates in a sleeve mounted in an aluminum-alloy housing. The spool is supported on each end by an externally pressurized hydrostatic bearing. The bearing is required in order to avoid metal-to-metal contact between the spool and sleeve, which could occur from the hydraulic side load on the spool during the valve operating cycle. A linear position-transducer attached to the spool provides position feedback to the second-stage valve. The 3-inch second-stage valve incorporates similar design features of the other valves including hydrostatic bearings supporting the spool.

3. CHAMBER AND EXPANSION SYSTEM PARAMETERS

3.1. Chamber

Total volume	105,000 liters
Piston diameter	90 in.
Piston-rod diameter	16 in.
Piston area	6,362 sq ft
Stroke for 1% expansion ratio	10 in.
Normal chamber spring constant	63,000 lb/in.
Dynamic mass	
Fiberglas piston	2,840 lb
Hydraulic components	1,400 lb
Expansion cycle time	
Normal	0.083 sec
With 50% greater spring constant	0.060 sec
Maximum normal piston velocity at 1% expansion ratio	31.5 ft/sec
Maximum normal piston acceleration at 1% expansion ratio	74 g

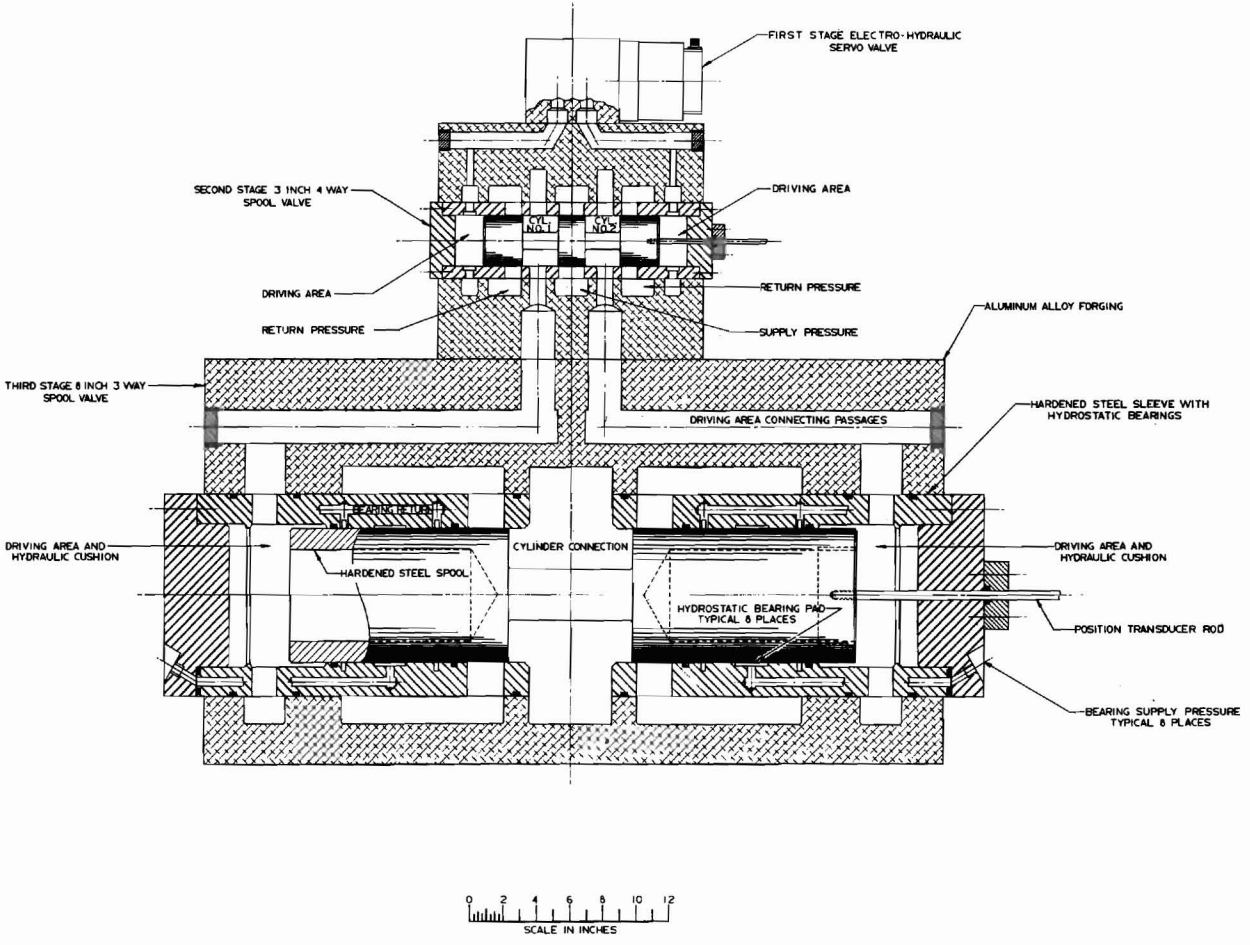

Figure 11. Expansion System Spool Valve

3.2. Hydraulic Actuator

Bore	18 in.
Maximum stroke	24 in.
Rod diameter	8 in.
Piston area	204 sq in.
Displacement per inch	0.884 gal
Pressure rating	3,000 psi
Piston-rod bearings	Externally pressurized hydrostatic
Third-stage valve (2 ea.)	
Type	3-way spool, closed center
Diameter	8 in.
Flow rating, pressure drop	12,500 gpm at 200 psi
Frequency response	15 cps
Second-stage valve (2 ea.)	
Type	4-way spool
Diameter	3 in.
Flow rating, pressure drop	1,500 gpm at 200 psi
Frequency response	25 cps
Third-stage valve (2 ea.)	
Type	4-way spool
Flow rating, pressure drop	250 gpm at 1,000 psi
Frequency response	50 cps

3.3. Hydraulic System

Fluid	Petroleum-base hydraulic oil
Maximum pressure	1,500 psi
Maximum delivery	550 gpm
Power requirement	660 hp
Filtration	10 micron
Reservoir capacity	660 gal
Auxiliary power supply	40 gpm at 3,000 psi

3.4. Accumulators

Expansion	16 ea., 10 gal
Recompression	8 ea., 10 gal
Buffer	8 ea., 10 gal

6. Refrigeration

1. FOREWORD

In this section, detailed lists of refrigeration requirements are given. Flow schematics for each system are also presented. Outline specifications for all the major equipment items have been prepared and are incorporated in the write-up.

The low temperatures required for successful operation of the 25-foot cryogenic bubble chamber make it necessary to use a refrigeration system which contains sophisticated equipment, piping, and control. One of the prime requisites for proper operation of the chamber is reliability of the refrigeration systems. Therefore, wherever possible, refrigeration cycles, equipment, and controls are chosen on the basis of practical operating experience in other bubble chamber operations or in the field of commercial gas liquefaction. Every effort is also made to design ease of operation and maintenance into the system, as this has, in past experience, been important in attaining a high level of chamber productivity.

2. REFRIGERATION REQUIREMENTS

Calculations of expected losses have been made at the hydrogen and helium temperature levels. Summaries of these calculated losses are shown in Tables III and IV. On the basis of these load requirements the hydrogen refrigerator has been sized at 20 kW. The refrigerator selected for this load will have a capacity of about 1200 liters per hour when operated as a liquefier.

Table III. Estimated Hydrogen Temperature Refrigeration Requirements (watts)

Static Heat Load			940	
Solid Conduction		740		
Chamber Legs	260			
Optic Assemblies	270			
Chamber Plumbing	20			
Expansion System	190			
Radiation		200		
Chamber Surface	40			
Heat-Shield Windows	160			
Chamber Pulsing Load - (0.15 joules/liter of volume/pulse/sec)			15,000	
Total Heat To Be Removed From Hydrogen Chamber				15,940
Other Hydrogen Refrigeration Requirements				
Magnet Heat Shield		100		
Magnet Supports		230		
Magnet Power Lead Cooling		570		
Helium Refrigeration Precooling		2,000		
Hydrogen Transfer Lines		360		
Chamber Fluid Liquid Storage Dewar		100		
Total Other Hydrogen Refrigeration Requirements				3,360
Total Estimated Hydrogen Refrigeration Requirements				19,300
Reserve Capacity			700	
Total Hydrogen Refrigeration Capacity				20,000

Table IV. Estimated Helium Temperature Refrigeration Requirements (watts)

Supply and return transfer-line losses		90	
Vacuum tank connections and piping losses		10	
Radiation loss to magnet		30	
Magnet support leg conduction		10	
Magnet power-lead losses		60	
Helium storage dewar		10	
Static heat gain to supercritical stream		380	
Conductor joint losses	90		
Supercritical helium circulating system	200		
Transfer lines and piping	90		
Total Static Helium Refrigeration Requirements			590
Refrigeration available for cool-down or I^2R losses during current-sharing mode operation			1,410
Total Helium Refrigeration Capacity			2,000

The helium refrigerator has been sized at 2000 watts. When the magnet has been cooled to liquid helium temperature, refrigeration required at operating temperature will be supplied by means of a helium stream at supercritical pressure.

Liquid nitrogen is required primarily as a precoolant for the hydrogen and helium refrigerators. The liquid nitrogen usage is expected to be about 500 liters per hour.

3. DESCRIPTION OF REFRIGERATION SYSTEMS

3.1. Hydrogen Refrigeration System. In the hydrogen refrigeration system schematic (see Figs. 12 and 13), a typical hydrogen refrigeration cycle is shown. The gas is introduced through a pressure reducing valve which maintains a constant pressure in the low-pressure or suction side of the refrigeration system. The nonlubricated hydrogen compressor operates

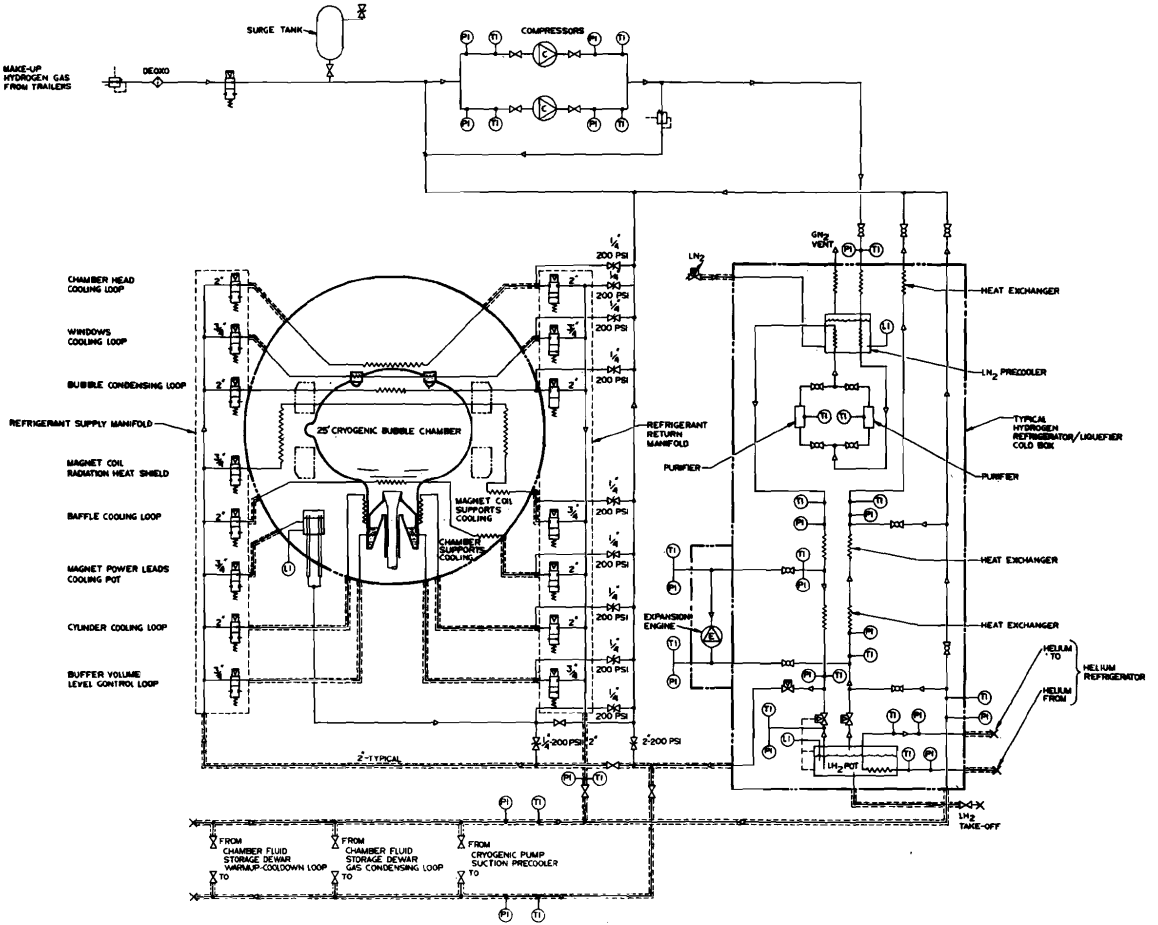

Figure 12. Hydrogen Refrigeration System Schematic

4 WAY-2 POSITION
SOLENOID OPERATED
SPRING RETURNED

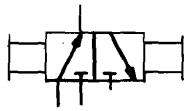

3 WAY-2 POSITION
(MANUAL OPERATED)

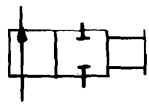

2 WAY-2 POSITION
(MANUAL OPERATED)

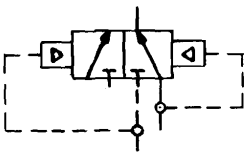

3 WAY-2 POSITION
PILOT OPERATED
(SHUTTLE VALVE)

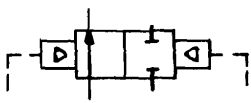

2 WAY-2 POSITION
(PILOT CONTROLLED)

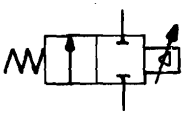

2 WAY-2 POSITION
PILOT OPR. VARIABLE
SPRING RETURNED

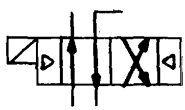

4 WAY-2 POSITION
SINGLE SOLENOID
ACTUATED
PILOT OPERATED

RELIEF VALVE

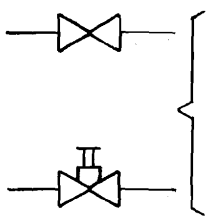

ON OFF
MANUAL OPERATED

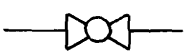

BALL VALVE

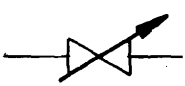

METERING VALVE

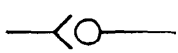

CHECK VALVE

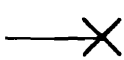

CAP, PLUG, OR
TAKE OFF

FLOW METER

VACUUM INDICATOR
TC-THERMO COUPLE
CC-COLD CATHODE
ION-ION

PRESSURE INDICATOR

DIFFUSION PUMP

ROTARY VACUUM PUMP
(BLOWER)

ION PUMP

MECHANICAL VACUUM
(PUMP)

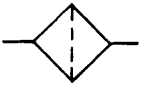

FILTER

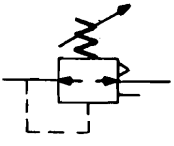

AIR LINE PRESSURE
REGULATOR
ADJUSTABLE
RELIEVING

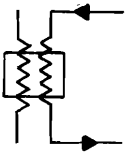

HEAT EXCHANGER
(WATER COOLED BAFFLE)

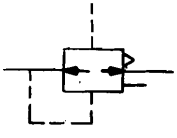

REGULATOR
PILOT CONTROLLED
RELIEVING

Figure 13. List of Symbols Used on Schematic Drawings

between a 1-atm suction and a 30-atm discharge pressure. After compression, the gas enters the cold box of the refrigerator, passes through the first heat exchanger, and enters the liquid nitrogen precooling bath where it is cooled to 80°K. The gas then flows through a silica-gel bed, where nitrogen contamination is absorbed from the hydrogen stream. The pure gas stream is again passed through the liquid nitrogen bath to remove the heat of absorption produced in the purification process and is then divided into two streams. One stream, up to 51% of the total flow, is diverted into the expansion engine where it drives the expansion engine and, in the process of doing this work, is reduced in pressure to slightly above 1 atm, and its temperature falls to 26.5°K. This gas then flows toward compressor suction, leaving the cold box at slightly below ambient temperature after passing through a series of heat exchangers in which heat is removed from the incoming gas stream. The gas which is not sent through the expansion engine is further cooled by heat exchange with the effluent gas from the expansion engine and, finally, with cold return gas from the chamber. This gas passes through a throttling valve and enters a vacuum-jacketed, multilayer-insulated line which carries it to the chamber. The pressure is dropped to 15 atm at the throttling valve. This gas is expanded to a lower pressure by the inlet valve to the cooling loop, and a fraction of the flow liquefies. This mixture of liquid and gas is used to supply the cooling requirements of the chamber. Only the latent heat of vaporization of the liquid is used in these cooling applications. The cold gas evolved is returned to the low-pressure side of the refrigerator. This low-pressure gas is warmed to room temperature in the process of cooling the incoming gas in a series of heat exchangers. The gas then returns to compressor suction.

A refrigerant supply manifold contains the loop inlet control valves that automatically meter the proper amount of coolant to each cooling loop on the chamber. After passing through the cooling loop, the coolant passes through another control valve which regulates the pressure in that loop. The gas then enters the refrigerant exhaust manifold and is returned to the refrigerator. The cooling loops, which regulate the temperature of the liquid in the chamber, are controlled

by a control system similar to that used on the Brookhaven National Laboratory 80-inch and 7-foot bubble chambers. In this system, the inlet or supply valve regulates the amount of coolant circulated, using the superheat measured across the loop as the control variable. The outlet valve regulates the temperature in the chamber by controlling the pressure and thereby the temperature of the coolant. This is a cascade control system with chamber temperature setting loop pressure. Other cooling loops which regulate a level, such as the level of liquid hydrogen in the magnet power lead hydrogen bath, will use a simple system in which the inlet valve automatically controls the flow into the vessel to maintain the proper level. An outlet valve will be provided, if necessary, to control the pressure in the vessel.

3.2. Helium Refrigeration System. A typical helium refrigeration system (see Fig. 14) is similar to the hydrogen system up to the point in the system where the gas leaves the cold purifier. The helium gas then enters a hydrogen precooler where it is cooled to $23^{\circ}K$. The gas flow is then split, so that a portion of the flow passes through the expansion engine. The remainder is cooled by heat exchange with the effluent gas from the expansion engine and cold return gas from the liquid storage dewar. The gas is then throttled to a pressure selected to obtain fluid properties which make it possible to attain a proper temperature difference in the final heat exchanger.

The gas then flows, in a vacuum-jacketed, multilayer-insulated line, from the helium refrigerator to the liquid helium storage dewar, where it is expanded to a pressure of 1 atm. The liquid formed is used to cool the supercritical helium stream, and the unliquefied portion mixes with the boil-off gas and is returned through a vacuum-jacketed, multilayer-insulated line to the refrigerator, where it passes through the low-pressure side of the refrigerator, cooling the incoming gas, emerges at room temperature, and is sent to compressor suction. Direct flow from the refrigerator, by-passing the supercritical helium circulating system, will be used to cool the magnet from room temperature to liquid helium temperature.

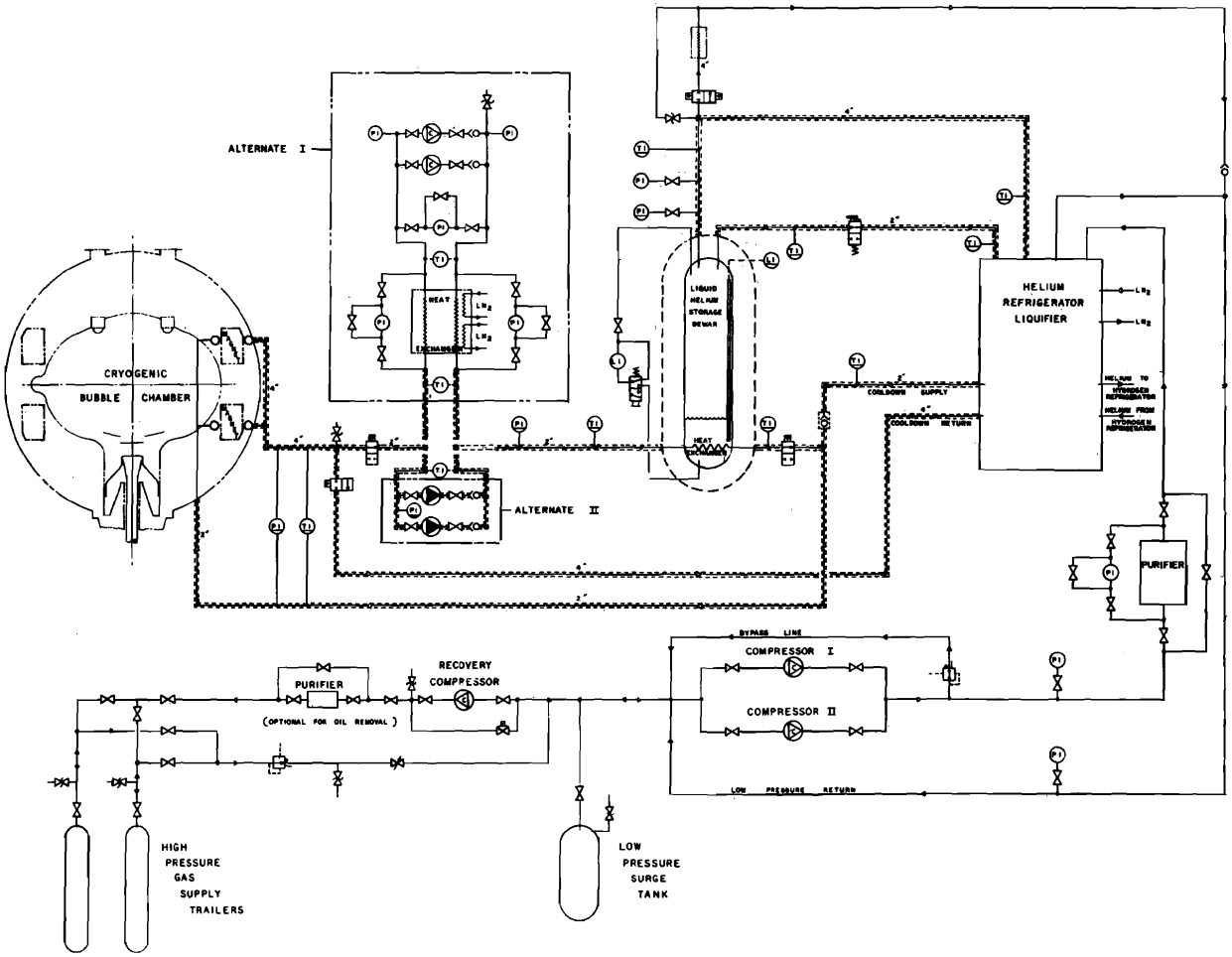

Figure 14. Helium Refrigeration System Schematic

Two alternate methods of circulating the supercritical helium are being studied. One uses a room-temperature compressor as the motive power, and the second uses a pump at liquid helium temperature.

The first alternate is to cool the magnet coils with fluid circulated by means of a compressor at room temperature. The cooling stream will enter the magnet at a temperature of 4.4°K and exit at a temperature not more than 5.4°K. The small pressure drop (1 atm or less) across the coil will be restored by the circulating compressor. Counterflow heat exchangers are used to cool the incoming stream and warm the exit stream. Cooling the incoming stream with liquid nitrogen and liquid hydrogen will be necessary to limit losses due to heat-exchanger inefficiency. After the incoming stream passes through the counterflow heat exchanger, it is transferred to a heat exchanger in the liquid helium storage dewar and is cooled to 4.4°K or less, and then is circulated through the magnet coils, removes heat there as necessary, and returns through the counterflow heat exchanger to the circulating compressor suction. Some practical difficulties in this type of system have been reported, i.e., thermal oscillations in the system. This problem is being investigated, and, until resolved, a second circulating system is being considered.

This second alternate is also shown in Fig. 14. It is simpler than the system described above and consists of a pump which circulates the supercritical helium and the heat exchanger shown in the helium storage dewar. It might be necessary to add another heat exchanger to cool the return stream from the magnet coils to a lower temperature before it goes to the pump suction. The disadvantages to this system are the lack of experience with a pump for these conditions (none, except in small sizes, have been built), and the fact that all the heat associated with the pump will have to be extracted at liquid helium temperature.

In either of these two alternatives a duplicate pump or compressor will be provided with full-rated flow for each pump (or compressor). This should assure a continuous supply of refrigeration to the magnet. Both pumps (or compressors) would be included in the emergency electric power system.

3.3. Chamber Fill and Vent System. This system (see Fig. 15) is designed to fill the chamber with the cryogen and to contain the contents of the chamber in liquid form when the chamber must be emptied. Raw supply gas passes through a cryogenic purification system into the chamber liquid storage dewar. The liquid will be stored in this dewar until it is needed for chamber filling. This system makes it possible to use a small purification system and store the chamber fluid in liquid form without the need for extensive gas storage facilities.

The hydrogen refrigerator can be used to supply cooling to a loop located in the inner vessel of the chamber liquid storage dewar. When the storage dewar has been cooled, the purified gas will be admitted to the vessel and condensed until the dewar is filled. This operation can be performed before cool-down, in order to conserve time during the filling operation. If the chamber is to be run with hydrogen, the dewar may be filled with liquid from an external source. The chamber can also be filled with hydrogen directly from a commercial supplier's truck without passing the liquid through the chamber liquid storage dewar. If the chamber is to be run with deuterium, the deuterium would be condensed into this vessel. After the chamber has been cooled to operating temperature, the liquid in the storage dewar will be transferred into the chamber.

During operation of the chamber, it is occasionally necessary to add or vent small amounts of liquid or gas, in order to compensate for shrinkage or expansion of the liquid due to changes in temperature or changes in liquid level due to leakage. Liquid for filling at a limited rate will be available from a cryogenic pump which takes its suction from the residual liquid in the chamber liquid storage dewar. The dewar must be kept at a low pressure during chamber operation, so that the chamber contents can be transferred to the storage dewar in case of emergency. Excess cryogens may be removed through a vent valve located in the buffer volume under the piston. Gas vented from this valve is returned to the chamber liquid storage dewar, where it can be recondensed.

When it is necessary to empty the chamber for warm-up, to change the cryogen used, or for an emergency dump, the chamber operator will normally transfer the liquid from the chamber back into the storage dewar.

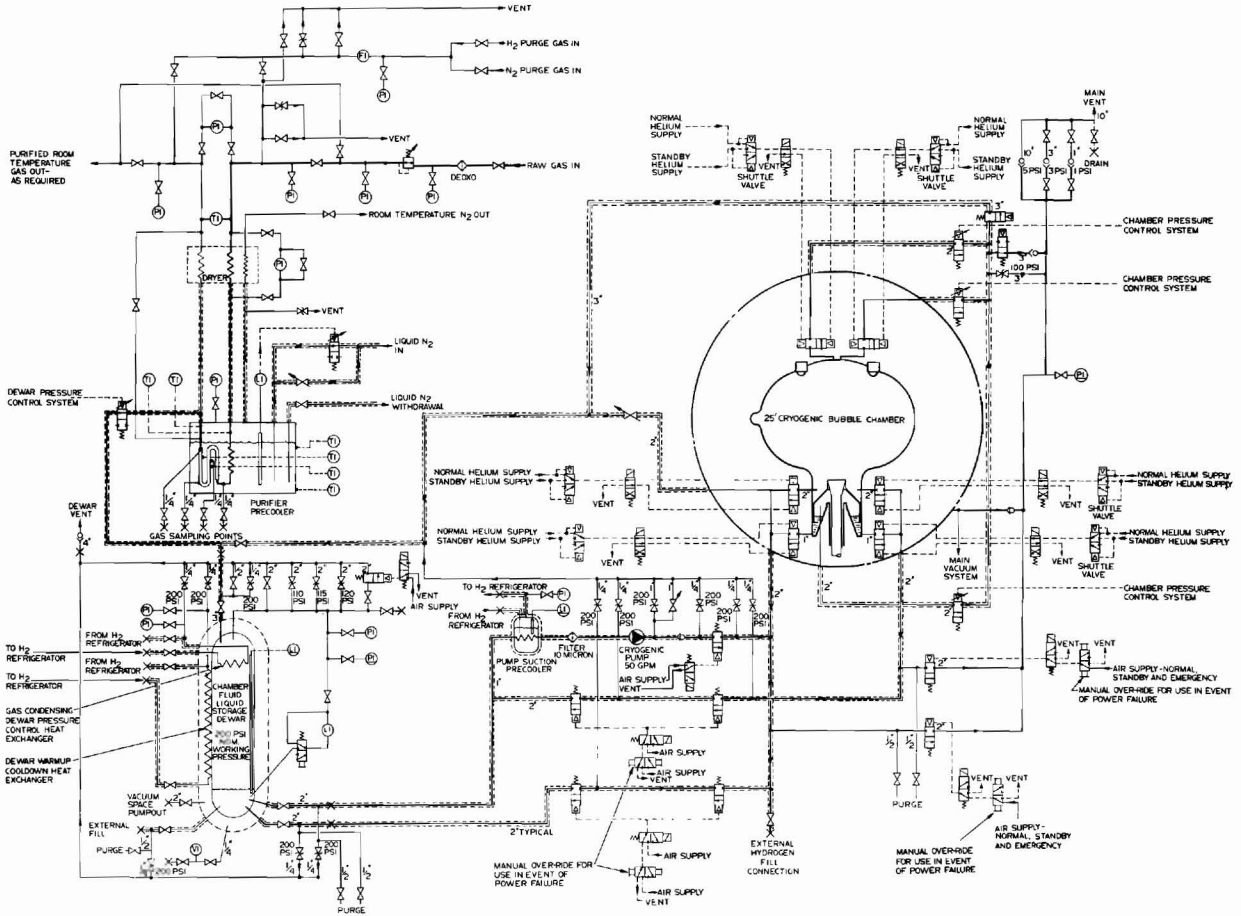

Figure 15. Chamber Fill and Vent System Schematic

A completely redundant system will be used to guard against failure of one of the liquid vent valves. The liquid vent valves are arranged in two groups of two, so that the volumes above and below the piston can be manifolded together during the dump to equalize the pressure in these volumes. This will prevent over-travel of the piston. If, for some reason, the liquid in the chamber cannot be returned to the storage dewar, the chamber operator may elect, in an emergency, to vent the chamber through a 10-inch vent line.

The 10-inch-diameter emergency vent line, 1000 feet long, is connected to the vacuum chamber. A check valve, set to open when the pressure in the vacuum chamber exceeds a few psi, separates the vent line from the vacuum chamber. At the end of the 1000-foot run, a vertical stack is provided for safely disposing of the chamber contents in case of emergency. Figure 15 shows the piping for normal filling and venting of the chamber.

The emergency vent line is sized to safely dispose of the chamber contents without exceeding the design pressure of the vacuum chamber or associated piping. The chamber contents, weighing 14,500 pounds for hydrogen, can be vented through the 10-inch line at a rate of 20 lb/sec; total venting period for a hydrogen spill in the vacuum tank is approximately 12 min with a peak pressure in the vacuum tank of 185 psia.

3.4. Liquid Nitrogen System. The liquid nitrogen used by the chamber refrigeration system in steady-state operation is required for precooling purposes in the hydrogen and helium refrigerators. It will also be required, on demand, for use in the chamber fluid cryogenic purifier, chamber and magnet support cooling, and helium transfer line heat shielding.

A 13,500-gal vacuum insulated storage dewar will be used to hold about a four-day supply of liquid nitrogen. A system of vacuum insulated transfer lines will be used to transfer the liquid from the storage dewar to its point of use. An automatic control system will be used to control the flow to a vaporizer system to maintain dewar pressure.

The dewar will be filled, as required, with liquid from a commercial supplier.

4. DESCRIPTION OF VACUUM SYSTEMS

4.1. Introduction. A high-capacity vacuum pumping system is provided to establish the main vacuum required for insulating the magnet dewar and the cryogenic chamber body. A common vacuum vessel encloses these cryogenic vessels. Multilayer insulation as well as a radiation shield surround them to further minimize heat gains.

A separate high-vacuum system is provided for the insulating spaces surrounding the camera windows. (See section B.7. for the description of this system.)

4.2. Main Vacuum System. Figure 16 schematically shows the major components of the main vacuum pumping system.

Two similar systems, each consisting of two oil-diffusion pumps, backed up by a series of forepumps, are shown. These systems can operate independently of each other, so that failure of either system will not result in total vacuum failure. Once the main vacuum has been established, one single system will be able to maintain a sufficiently high insulating vacuum, so that the heat load does not exceed the refrigeration system's capacity.

A separate roughing system of high pumping capacity is provided for initial evacuation of the vacuum tank. During the initial pump-down, the high-vacuum system is completely by-passed, thereby preventing possible contamination of the high-vacuum system during this period. The roughing system can also be connected as a booster foresystem into the main vacuum pumping system by opening the pneumatic 6-inch by-pass valve.

All diffusion pumps may be isolated by individual valves on the inlet and outlet sides of each pump. These valves are pneumatically actuated and will close automatically in case of power failure or in case of overpressure to the vacuum tank. Such an overpressure would cause the main check valve into the emergency vent line to open, venting the vacuum tank to the emergency venting system.

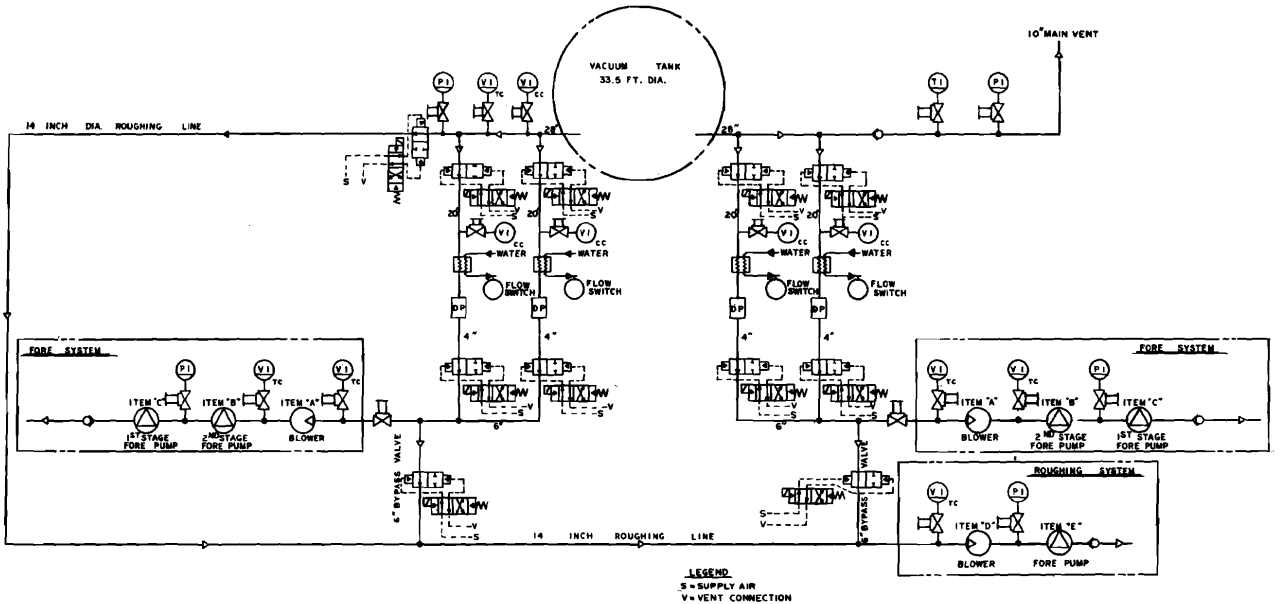

Figure 16. Main Vacuum System Schematic

The pumping speed requirements for the main vacuum system are given below.

Main Vacuum System Pumping Speed Requirements

Net volume of tank	16,500 cu ft
Inside surface area of tank	3,520 sq ft
Outgassing rate (assuming aluminum)	24,600 liters/sec at 10^{-6} mm
Gross pumping speed of high-vacuum system	70,000 liters/sec at 10^{-6} mm
Net pumping capacity (baffled)	31,000 liters/sec at 10^{-6} mm

5. EQUIPMENT

5.1. Hydrogen Equipment. (See Fig. 12, page 45.)

Hydrogen Refrigerator. The hydrogen refrigerator must provide a minimum of 20 kW of refrigeration at the terminals of its cold box. Used as a liquefier, it must produce 1200 liters of liquid hydrogen per hour. The thermodynamic cycle for the refrigerator and its major components will be chosen by the vendor, to be approved by BNL.

The refrigerator plant consists of nonlubricated compressors, a cold box, piping, and associated controls. The cold box will contain all necessary heat exchangers, liquid nitrogen precoolers, purifiers, expansion engines, liquid hydrogen pot, control valves, and instrumentation required for start-up and operation of the plant. An added feature is a cooling loop inside the cold box in which helium will be circulated to provide the adjacent helium refrigerator with liquid hydrogen temperature precooling, if such precooling will be demanded by the helium refrigerator cycle. This arrangement avoids safety hazards involved with introducing hydrogen into the helium refrigerator.

Hydrogen Surge Tank. Gas storage tank, 1000-cu-ft capacity, designed and constructed for 150 psi working pressure, ASME Code, carbon steel exterior, wirebrushed with one coat of red lead primer.

Refrigerant Supply Manifold. An assembly of at least 10 valves (2 spares) to supply the various cooling loops on the bubble chamber. The valves are to be stainless steel, vacuum insulated, pneumatically operated, and modulating. Individual valves must be accessible for maintenance.

Refrigerant Exhaust Manifold. Similar to the refrigerant supply manifold, with valves sized for flow of boil-off gas from appropriate cooling loops on the bubble chamber.

Hydrogen Control System. Control system includes all components, piping, and panel necessary to provide remote and automatic control of pressures, levels, temperatures, and flow rates in the hydrogen refrigeration system. It includes the chamber temperature control system. All moving parts of controllers and transmitters located in the high magnetic field of the chamber magnet must be constructed of nonmagnetic materials (see Fig. 12, page 45).

Deoxo. Gas purifier to catalytically combine up to a maximum of 1% oxygen with hydrogen in a hydrogen gas stream with less than one part per million (ppm) oxygen impurity remaining. The unit is to be designed for operation at any flow rate up to 40,000 scfh and at any pressure up to 200 psig with a pressure drop not to exceed 5 psi.

Cryogenic Transfer Lines. Vacuum-jacketed transfer lines with multilayer insulation. Inner line material to be invar or austentic stainless steel. Outer jacket austentic stainless steel. All connectors bayonet type with warm pressure seal and V-band coupling. Each line section must have a combined pumpout and relief valve. For line sizes see Fig. 12.

5.2. Helium Equipment. (See Fig. 14, page 50.)

Helium Refrigerator-Liquefier. Complete refrigerator, including compressors, instrumentation, and controls. Cycle to be specified by vendor with approval by BNL. When operated as a refrigerator should produce not less than 2000 watts at 4.3°K into 1000-gal liquid storage dewar (to be purchased separately). To include appropriate by-pass valves and plumbing to allow efficient cool-down of the magnet with direct flow from the refrigerator. Liquid nitrogen and liquid hydrogen precooling may be used. System should include a purifier to remove impurities from the helium gas stream.

Supercritical Helium Circulating System

Alternate I

Circulating Compressor (two required). Compressor; nonlubricated; flow rate: 615 gm/sec; inlet pressure: 15 atm; discharge pressure: 16 to 20 atm.

Heat Exchanger. Counterflow heat exchanger; operating pressure: 20 atm, cold end differential temperature: 0.1°K, warm end differential temperature: 5°K; three-way heat exchanger sections as required for cooling at liquid nitrogen and liquid hydrogen temperatures.

Alternate II

Helium Pump (two required). Vacuum-jacketed supercritical helium pump; flow rate: 615 gm/sec; inlet pressure: 15 atm; outlet pressure: 16 atm; operating temperature: 4.2°K.

Liquid Helium Storage Dewar. Multiple-layer, insulated storage vessel; maximum allowable boil-off rate: 1% per day; 1000-gal capacity. To include heat exchanger in liquid volume to cool 615 gm/sec helium at 15 atm pressure from 5.4°K to 4.4°K.

Gas Recovery Compressor and Optional Purifier. Nonlubricated compressor; flow rate: 20 scfm; 15 psia inlet pressure; 2200 psia discharge pressure. If compressor is of oil-loaded diaphragm type, a purification system and alarms must be provided to prevent contamination of the system by oil.

Low Pressure Surge Tank. Horizontal gas storage tank, 1000-cu-ft capacity, designed and constructed for 150 psi working pressure ASME Code, carbon steel.

5.3. Chamber Fill and Vent System Equipment. (See Fig. 15, page 53.)

Chamber Liquid Storage Vessel. Vacuum-insulated storage vessel; supports to be designed for use with hydrogen, deuterium, or neon; capacity not less than 30,000 gal; maximum allowable boil-off rate with hydrogen 0.25% per day. Inner vessel to be ASME Code rated at 200 psi. A heat exchanger is to be provided in the dewar with sufficient surface area to condense hydrogen or deuterium into the dewar at a rate of 400 gal per hour with cooling supplied in the coil at 25°K. A coil to be provided on the

outside of the inner vessel to allow rapid warm-up and cool-down of the vessel for servicing and purging. Instrumentation and connections required are indicated on Fig. 15, page 53.

Deoxo. Gas purifier to catalytically combine up to a maximum of 1% oxygen with hydrogen in a hydrogen gas stream with less than 1 ppm oxygen impurity remaining. The unit is to be designed for operation at any flow rate up to 40,000 scfh and at any pressure up to 200 psig with a pressure drop not to exceed 5 psi.

Cryogenic Purifier-Dryer-Precooler. A combined purifier-dryer-precooler, which freezes out moisture and hydrocarbon impurities in the dryer section, absorbs nitrogen from the gas stream at liquid nitrogen temperature, and precools the effluent gas stream for condensation in another piece of equipment. Heat exchangers to be sized so that the total flow of 40,000 scfh hydrogen or deuterium can be extracted at liquid nitrogen temperature or at room temperature. Working pressure: 200 psi; inlet impurity level: 200 ppm total, 50 ppm nitrogen. Outlet total impurity to be less than 1 ppm after 24 hours operation when operated at specified impurity levels and flow rate. All valves and piping necessary for purge and reactivation to be included. See Fig. 15 for typical instrumentation, valves, and piping required.

Cryogenic Pump. A vacuum-jacketed liquid cryogenic pump designed to pump hydrogen, deuterium, or neon. Suction at 1 atm and discharge at 200 psi. Flow rate with hydrogen: 50 gpm. Electric motor (40 hp) and all controls for pump and motor to be included.

Vacuum-Jacketed Transfer Lines. Vacuum-jacketed liquid and/or gas transfer lines, multiple-layer insulation. Inner line material to be invar or austentic stainless steel. Outer vacuum jacket: austentic stainless steel. All connectors to be warm seal, V-band coupling type. Combined pumpout relief valve to be installed in each section of the line. Line sizes required are indicated on Fig. 15.

Emergency Vent Line

Size: 10-inch International Pipe Size

Pressure Rating (ASME Code): 200 psi

Length: 1000 feet

Material: 100 feet, Type 304 Stainless Steel Pipe

900 feet, 6061T6 Aluminum Pipe

Instrumentation and Valves: As shown in Fig. 15, page 53

5.4. Liquid Nitrogen System Equipment

Liquid Nitrogen Storage Vessel. Vacuum-insulated, liquid nitrogen storage dewar, 13,500-gal capacity. To be supplied by the National Accelerator Laboratory.

Liquid Nitrogen Transfer Lines. Double-walled, vacuum-jacketed transfer lines; polyvinyl chloride outer cover; semiflexible; to be supplied with vacuum pumping connection; ends to be suitable for soldered connection; sizes and lengths to be determined on basis of liquid nitrogen flow rates required for each usage in the bubble chamber system.

5.5. Main Vacuum System Equipment. (See Fig. 16, page 56)

Diffusion Pumps (Item F): 4 required

20-inch nominal size

Speed: 17,500 liters/sec

Power: 12 kW per pump

Stainless steel body

Note: The diffusion pumps must operate in a magnetic field of approximately 1000 gauss.

Foresystem. The pumping speed of the entire foresystem described below shall be a minimum of 2000 cfm from 1 mm to 10^{-2} mm. Minimum capacity of the foresystem shall be 100 cfm at 10^{-3} mm. The ultimate pressure of the foresystem shall be 3×10^{-4} mm.

High-Stage Blower (Item A) (2 required):

Displacement	2600 cfm
Pumping speed	2300 cfm
Starting pressure	50 mm
Motor	20 hp

Two-Stage Forepump (Item B):

Displacement	120 cfm
Pumping speed	100 cfm 10^{-2} to 10^{-3} mm
Motor	5 hp

Single-Stage Pump (Item C):

Displacement	150 cfm
Pumping speed	100 cfm, atm pressure to 1 mm
Motor	5 hp

Roughing System. A roughing system is provided for initial pump-down and back-up of the high-vacuum system.

The roughing system shall operate automatically from atmospheric pressure to an ultimate pressure of at least 4×10^{-4} mm. Minimum pumping speed shall be 4300 cfm at 1 mm and 1000 cfm at 1 micron.

Specifications:

Blower (Item D)

Type	Lobe
Displacement	5000 cfm
Motor	30 hp
Automatic cut-in	10 mm

Forepump (Item E):

Displacement	500 cfm
Motor	25 hp
Blank-off pressure	10 microns

7. Optics

1. FOREWORD

The optical system provides for illumination and photography of events in the chamber through any of six ports located on top. These ports are closed by a series of spherical windows which form part of the lens system. Bright-field illumination is achieved through the use of a circular flash tube concentric with each lens and 3M "Scotchlite" fixed to the chamber walls and baffle. Three cameras of 130° field angle will normally be used, but the six ports provide flexibility for their

placement and for the possible addition of other camera types. The film transport will move 70-mm film rapidly enough for multipulsing.

The 25-foot chamber was first proposed to have 140° field, low-distortion lenses. Design work done since this proposal was made has shown that the field angle for a low-distortion lens has a practical limit at about 130°. Removing the requirement that all optic axes be perpendicular to the chamber axis makes this field reduction result in very little loss in visible volume. Therefore, a complete design was made for a diffraction-limited lens of 130° field angle and low distortion. For comparison, a design was also completed for a lens of 130° field allowing higher distortion. These designs were done by Prof. Charles G. Wynne, Director of the Optical Design Group at Imperial College in London. His computer program for the optimization of complicated lens systems is an extremely sophisticated one. His work was done on the Brookhaven National Laboratory CDC 6600 computer. On the whole, the comparison favors the use of the higher distortion lens, and it is incorporated here in the chamber design.

Although no experience has yet been gained in the analysis of actual events in the 7-foot test facility with its nonparallel optic axes, pictures with and without hydrogen have been taken using its regular cameras and the optical constants easily constructed from them. Thus the use of nonparallel optics is not expected to cause difficulty in the 25-foot chamber. 7-foot photographs are shown in Fig. 17 and in Fig. 23 (page 76).

The six camera ports are equally spaced around a circle of diameter 9.2 feet. It is foreseen that the camera triplet which will normally be used is that with one camera over the entering beam and the other two at 120° from it (see Fig. 8, page 33). One other port can be used for the viewing periscope, and the remaining two either blanked-off or used, e.g., for a pair of longer focal-length cameras looking with higher resolution at the central portion of the chamber. This arrangement might be particularly desirable if a track-sensitive target is located axially in the central region. However, such lenses have not been designed and are not specifically included in this report. It will be noted that camera No. 1 is tilted at 10° to the vertical in order to

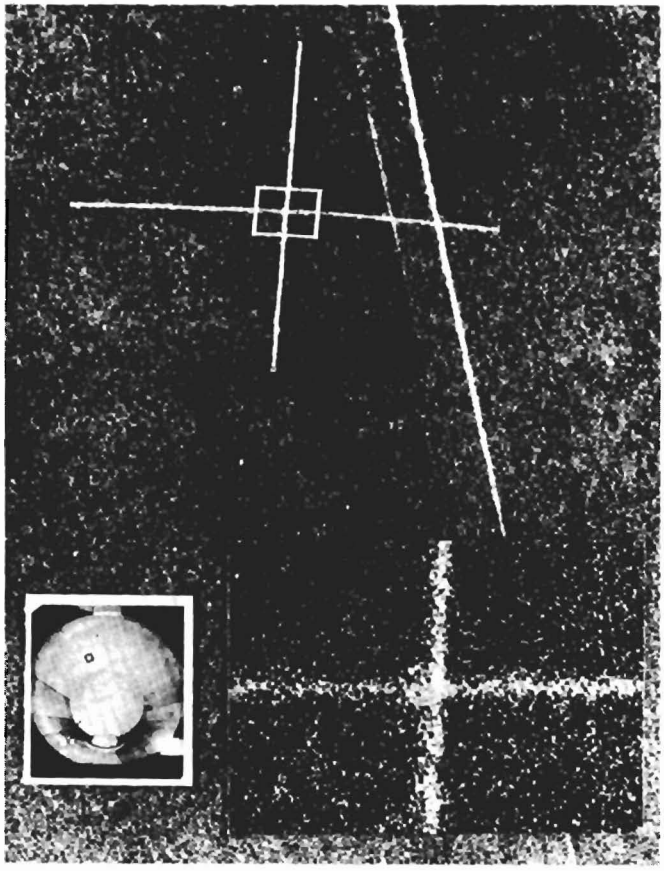

Figure 17. Composite photograph of the 7-foot when the chamber was filled with liquid hydrogen. In the lower left insert there is a contact print of the chamber image. Clearly visible are the 1-foot-wide strips of Scotchlite which run vertically from top to bottom along the chamber wall and the beam window at the bottom of the print. A small square is outlined in black on the insert which includes a chamber fiducial located opposite to the beam window at the height of the beam plane. Here the demagnification is 60X. This area is magnified and the main figure, as reproduced here, is an essentially half-size print of this part of the chamber. The size of the fiducial in chamber space is 6 in. x 6 in.; however, the vertical line is foreshortened by the camera geometry. Another area, outlined in white and further magnified approximately 6 times, is shown in the lower right corner.

maximize the downstream volume seen by it. This has the effect of changing its magnification in the beam plane by about 1.7 from the beam window to the downstream end.

After a period of doubt that fused silica blanks of high enough quality and large enough size could be obtained for the windows, it is now believed that they are available, and the design therefore includes all windows of fused silica. This material is desirable for this service because its very low thermal contraction gives it the ability to withstand very large temperature gradients without breaking. This means that cool-down can proceed at a rate limited only by available refrigeration or stresses in the fiberglas-epoxy piston. It also means that the windows are safe against breakage in case of total vacuum failure against a cold window or impingement of liquid hydrogen against a warm window.

2. WINDOWS AND LENSES

The two lens and window systems which have been designed are shown for comparison in Fig. 18. We will call the low-distortion design "L", and the high-distortion design "H", in this description. Their characteristics are as follows.

2.1. Distortion. "L" has distortion of 0.8 at 65°. This means that for a point in object space at 65° off axis, the distance of its image from the axis is 0.8 as large as if formed by a perfectly nondistorting lens. "H" has distortion at 65° of 0.5. At 45°, "L" has 0.9 and "H" has 0.8. The overall image diameter for "L" is 142 mm and for "H" is 73 mm. Film usage can thus be almost a factor of two less for "H" than for "L".

2.2. Monochromatic Bubble Image. "L" has a design relative aperture of f/19, and its monochromatic aberrations approach $\lambda/4$. Thus it cannot be used for special purposes with a larger aperture and a smaller depth of field to get better resolution. It will give an Airy disc diameter on axis of 13 μ (at half maximum intensity, which is practical for photography). At the edge of the field the Airy disc will be expanded radially by a factor of 4.0 and tangentially by 1.4. Since the differential magnification at the edge of the field is 0.8 that at the

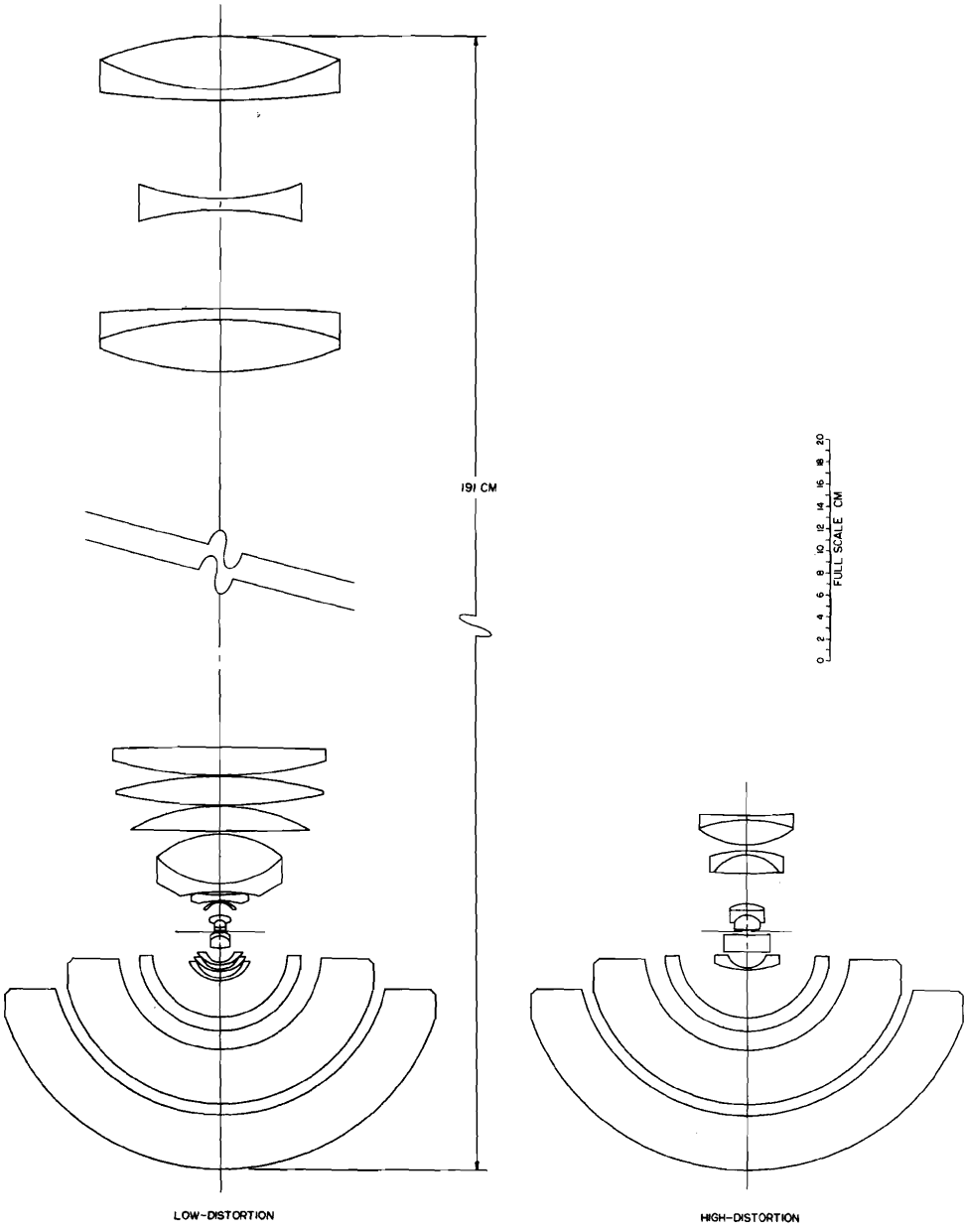

Figure 18. Low- and High-Distortion Lens Systems

center, the radial factor must be multiplied by 1.25 to become 5.0 when projecting back into space. At 45° this number is 2.0.

"H" has a design relative aperture of f/8, and its monochromatic aberrations are all well within $\lambda/8$. Its depth of field at this aperture is about 1 m, and Airy disc diameter 6 μ (at half height). If used at f/16 to get the full chamber depth, the Airy disc is 12 μ. Because of its distortion, together with pupil aberration, it produces an Airy disc on film which is nearly circular and of uniform diameter over the entire field. When projecting this image back into space, however, the differential distortion elongates it radially by a factor of 6 at 65°. At 45° this factor is 2.2. Thus, for accuracy of position measurements in space, the two designs are monochromatically nearly equivalent. "H" has the advantage of being capable of larger aperture for special purposes.

2.3. Chromatic Aberration. Both lenses are designed for a spectral range of 560 mμ to 620 mμ. The combination of xenon flash, Scotchlite, and Eastman Kodak 2482 Pan film is rather broadly peaked in this range. "L" has a maximum chromatic broadening of the image of 17 μ near the edge of the field. At angles less than 60° it is everywhere less than 8 μ.

"H" has a chromatic spread which is less than 3 μ over the entire field.

2.4. Illumination. For objects in a given plane perpendicular to the axis, and at an angle θ from the axis of a nondistorting lens with no entrance pupil dilation, light intensity in the image is proportional to $\cos^4\theta$. Thus over a semi-field of 65° the image intensity would vary by a factor of about 30. Pupil dilation and barrel distortion both reduce this effect in these lens designs. In "L" this factor is about 6 and in "H" it is about 1.3. Thus difficulties with variation of film exposure and contrast over the field, which would have been severe in "L", are almost nonexistent in "H".

2.5. Telecentricity. In a perfectly telecentric lens all rays strike the image plane at 90°, eliminating random distortions caused by lack of

flatness of the film. The maximum departure from telecentricity of "L" is 2.5° and of "H" is 4.7°. To hold random displacements on the film to 1 μ, the film must therefore be held flat to within 23 μ for "L" and 12 μ for "H". The glass platens developed for the 7-foot test facility hold the film flat to $\leqslant$ 2 μ, and the same type would be used here.

2.6. Flash Tube Accommodation. Both designs have a front-element diameter of 50 mm. This will allow placement of a concentric flash tube of inside diameter small enough to provide a minimum effective divergence angle at the Scotchlite of 0.4° and maximum of about 0.7°. The Scotchlite is very efficient in this range. However the front surface of the front element has a much larger radius in "H" than in "L", and this will allow placement of the flash tube further forward in "H" with less obstruction of light from the tube at large field angles.

2.7. Complexity. "L" has 20 glass elements (not including the windows) and 28 air-glass interfaces. Many of these elements are of large diameter. "H" has only 9 elements with 10 air-glass interfaces, and the maximum diameter is less than half that in "L". It is clear that "H" will be a great deal easier and cheaper to construct, with a much higher probability of producing a lens which performs close to design specifications. It also eliminates the difficulty of holding the relative positions and angles of the front section and the relay section in "L". In addition, the contrast will be better in "H", since the number of light-scattering, air-glass interfaces is much smaller.

2.8. Image Relay vs. Film Relay. The design of a low-distortion, wide-angle lens requires a larger axial length than a wide-angle lens in which no correction is made to the radial distortion. "L" could be shorter than specified here, but it would still be longer than "H", and its complexity would not decrease. It has been stretched here to $\sim$ 10 feet (including image plane) in order to bring the image plane just outside the vacuum tank. "H" needs no relay section, and to keep it as simple as possible requires bringing the film about 9 feet inside the vacuum tank and back out through re-entrant tubes equipped with film guides. This has now been done successfully down 18-inch tubes for the

7-foot test facility and down 9-foot tubes for the Argonne National Laboratory 12-foot bubble chamber, both using similar techniques. Therefore no difficulties are expected from use of a long film relay. However, positioning the heavy image relay section in "L" relative to the front section, and holding it in place to micron tolerances during the shock of an expansion would require a very heavy and expensive structure. Comparison on this score also favors "H".

Since the distortion of "L" is substantial, either lens will require the use of distortion correction in geometric-reconstruction programs. The single advantage of "L" over "H" is that the pictures would look less distorted, and it would be easier for a human scanner to, for instance, connect the decay of a neutral particle, whose trajectory is tangential, with its production event. It is believed that scanners will soon largely accommodate to the distortion (tests made at ANL have indicated this). The residual effect may only be that ambiguities between possible production events in a few cases will have to be resolved by computer geometry or occasionally kinematics calculations. For the above reasons, design "H" has been chosen for the 25-foot chamber.

The three windows in each port have the same thickness and radii as those used on the 7-foot test facility but cover a larger angle. They will all be made of optical grade fused silica, Dynasil Corporation of America No. 4000 or equivalent.

The mounting system for these windows will be very similar to that for the 7-foot, except for the method of holding and sealing the chamber window itself. The latter will be epoxied to a thin Invar tube instead of using a standard inflatable seal as in the 7-foot. An inflatable seal with teflon or indium "O" rings cannot be used because of the very small angle at the edge of the window. Other methods considered include soldering to a layer of copper evaporated on the edge of the glass surface. The soldering technique is expensive and difficult and has not been made to work for diameters like those used here. This technique has been abandoned by the ANL 12-foot chamber group in favor of the epoxy technique. The latter has been tested for heat-shield windows of BK7 glass in the 7-foot and found to provide a

vacuum-tight seal and a good mechanical bond without deterioration after repeated thermal cycling.

The proposed mounting system is shown in Fig. 19. For comparison, the 7-foot system is shown in Fig. 20. By eliminating the inflatable seals it is possible to make the 25-foot system somewhat simpler. The system to be adopted by the CERN 3.7-meter chamber is shown in Fig. 21. It has also drawn heavily on the 7-foot design.

3. FILM FORMAT AND VISIBLE VOLUME

The image will be 73 mm in diameter, centered on 70-mm film, sprocketed on both sides with Eastman Kodak Type II sprocketing. Allowing 1 mm inside each row of sprocket holes for vacuum pull-down on the platens of standard analysis equipment, 7.5 mm is cut off each side of the image. This is a loss of almost 11% of the image area, but that corresponds to a loss of only about 5% of the total chamber volume for any one view. The total chamber volume above the expansion system baffle is 100,000 liters. The proposed lenses and combinations of lenses see the volumes shown in Table V.

Table V. Visible Volume

Camera(s)	Volume Imaged on Film (liters)
1	81,000
2	75,000
3	75,000
1 and 2	71,000
1 and 3	71,000
2 and 3	70,000
1, 2, and 3	68,000

These numbers take account of the volume lost by film edge cut-off.

The film format is shown in Fig. 22, including the proposed data box layout.

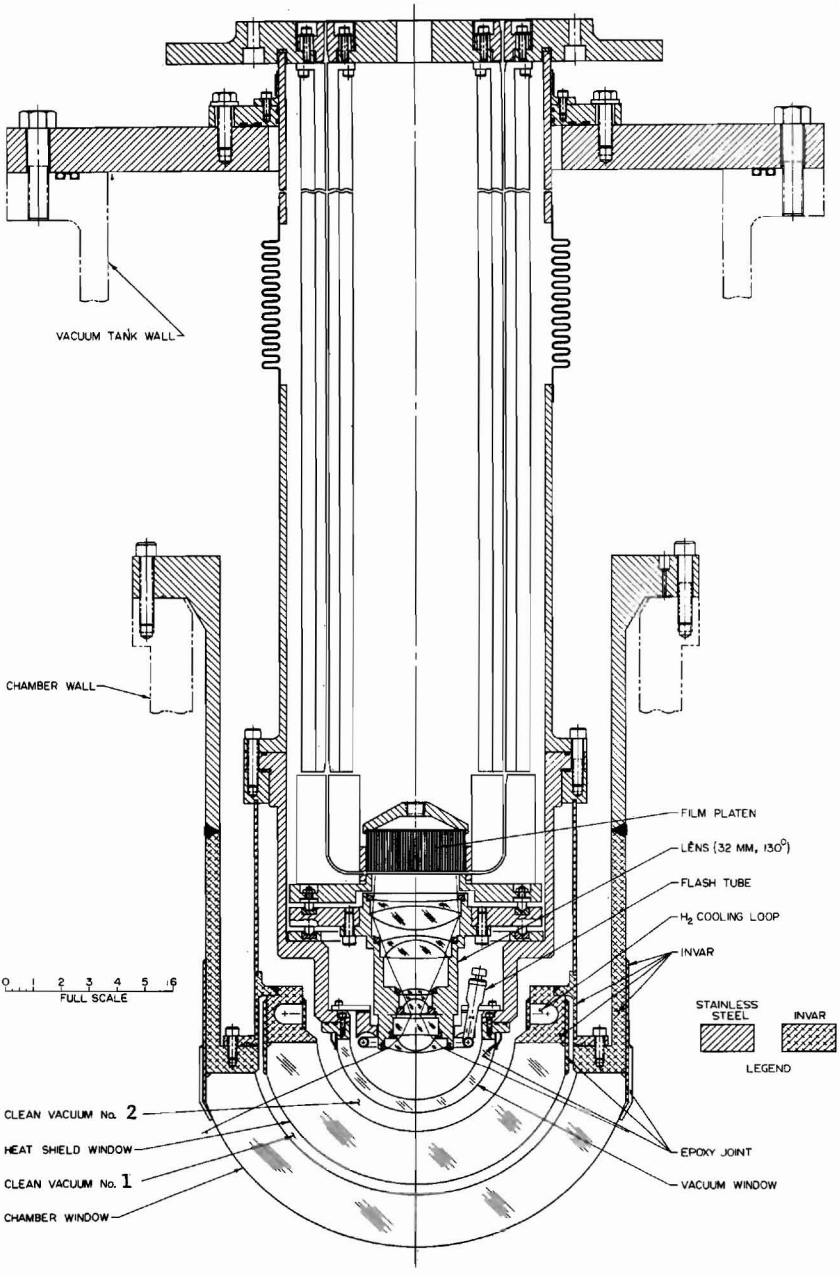

Figure 19. Cross Section of Optical Assembly

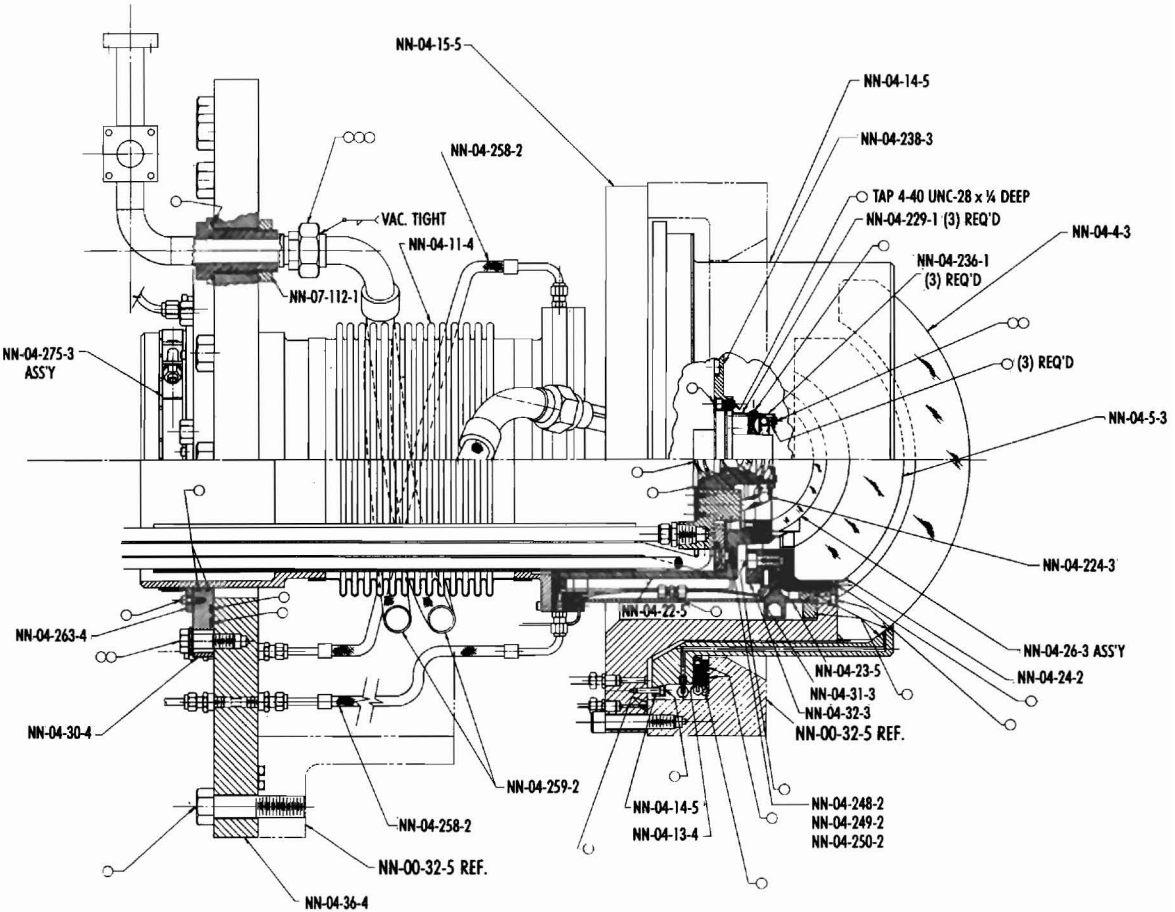

Figure 20. Cross Section of 7-foot Optical Assembly

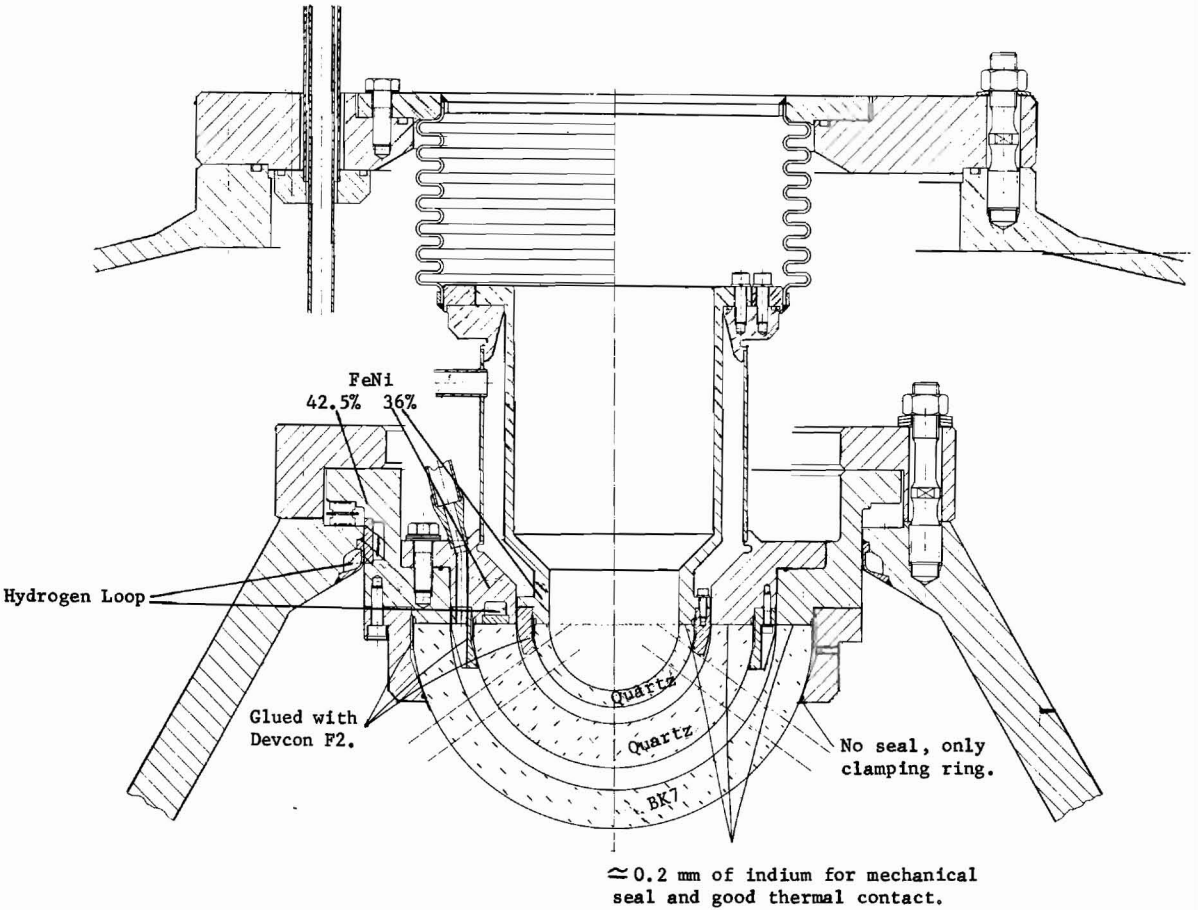

Figure 21. Cross Section of CERN Window Assembly

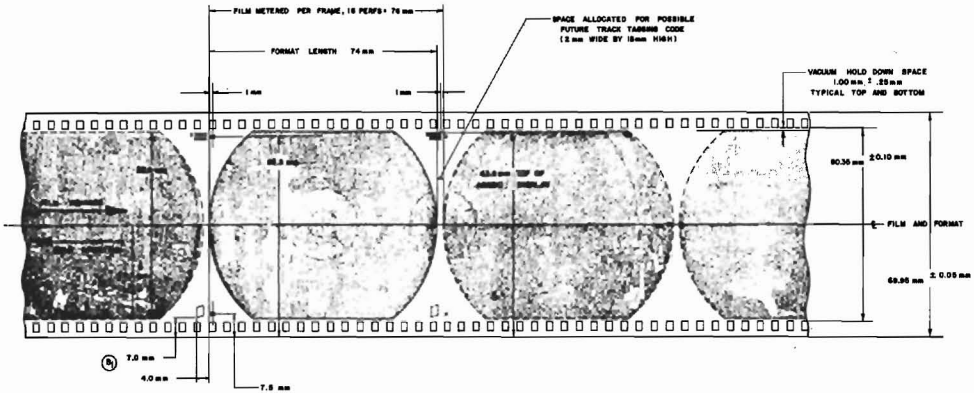

NOTES:

1. DRAWING REPRESENTS THE FILM FORMAT AS VIEWED FROM THE BASE SIDE OF THE FILM, IN THE CAMERA.
2. BRIGHT FIELD (SCOTCHLITE) ILLUMINATION PRODUCES A FORMAT CONSISTING OF A BLACK FIELD WITH CLEAR BUBBLE TRACKS AND WINDOW FIDUCIALS.
3. FILM TO BE KODAK 2482 PAN ON ESTAR BASE, OR EQUIVALENT. CONTRAST - HIGH - (GAMMA = 4 ±) RESOLUTION - 200 l/mm AT LOW CONTRAST. FILM PERFORATIONS - TYPE 32 PER A.S.A. SPEC. PH 1.20
4. ROAD FIDUCIAL AND BINARY DATA BOX TO BE BLACK LINES ON A CLEAR FIELD OR BACKGROUND. THE RATIO OF LINE DENSITY TO FILM BASE FOG (CONTRAST) TO BE 1.5 MINIMUM.
5. LOCATING DIMENSIONS OF ROAD FIDUCIALS, BINARY BOX AND ARABIC DISPLAY TO BE TYPICAL FOR ALL THREE LENS POSITIONS.
6. NOMINAL LENS FOCAL LENGTH 31.8 mm. LENS ACCEPTANCE ANGLE 130° DEGREES (REQ.)
7. THE 18th BINARY BIT SHALL BE ADDED ARTIFICIALLY TO PRODUCE AN ODD PARITY, BASED ON THE TOTAL NUMBER OF BITS INCLUDING THE START BIT, FRAME NUMBER, VIEW NUMBER AND STOP BIT.
8. BINARY BIT No.18 IS A SPARE AND IS NORMALLY UNUSED, (BLANK, THAT IS ZERO).

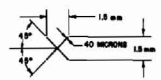

ROAD FIDUCIAL

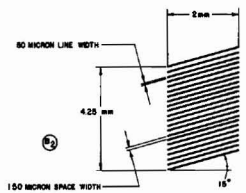

BINARY BOX

BINARY BOX CODE

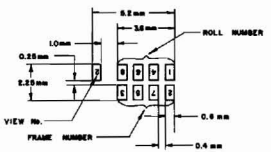

ARABIC DISPLAY

Figure 22. Proposed 25-foot Bubble Chamber Film Format

4. ILLUMINATION

The system used will be the same as that developed for the 7-foot test facility. It will use 3M Scotchlite, Type SPR-1042 with selected small beads, cemented directly to the chamber walls and expansion system baffle. The light sources will be E.G. & G. special toroidal xenon flash tubes of nominal 9-cm diameter and 9-mm cross section. Each will be mounted concentrically with its lens as shown in Fig. 19. A toroidal reflector mounted immediately behind the tube will form an image of it between the tube itself and the lens barrel. This broadens the effective source, thus reducing the "speckling" or "mottling" of the background produced by Scotchlite when used with a very narrow source. This geometry will give an effective "divergence" angle at the Scotchlite (angle subtended at the Scotchlite by the optic axis and the flash tube or its image) in the range 0.4° to 0.7°. For the 7-foot test facility, the corresponding range is 0.6° to 1.0°. Comparing the efficiency of Scotchlite in these two ranges gives a ratio of about 1.5 more light for the 25-foot case. In addition, the average distance from light source to Scotchlite is $\sim$ 2 times greater for the 25-foot, reducing its light by a factor of 4 relative to the 7-foot. Also, the relative aperatures for the 25-foot and the 7-foot chambers are f/16 and f/11 respectively, favoring the 7-foot by a factor of 2. Finally, no chromatic filtering was used in obtaining the pictures of the 7-foot, and we intend to use a band for the 25-foot containing about half the response for the source-Scotchlite-film system as in the 7-foot case. Thus the overall increase in flash-tube power required over the 7-foot is $\frac{4 \times 2 \times 2}{1.5} \sim 10$. The power used in obtaining 7-foot pictures (see Fig. 23) was 20 joules/flash, and the 25-foot should therefore require $\sim$ 200 joules/flash. Tubes of the length used here should be capable of 400 joules/flash with lifetimes of a few X 10^6 flashes. Thus there is enough margin for some equalizing of illumination by using a neutral density filter, if it proves to be necessary.

The problems encountered with making Scotchlite adhere reliably to stainless steel seem finally to have been solved, in the case of the

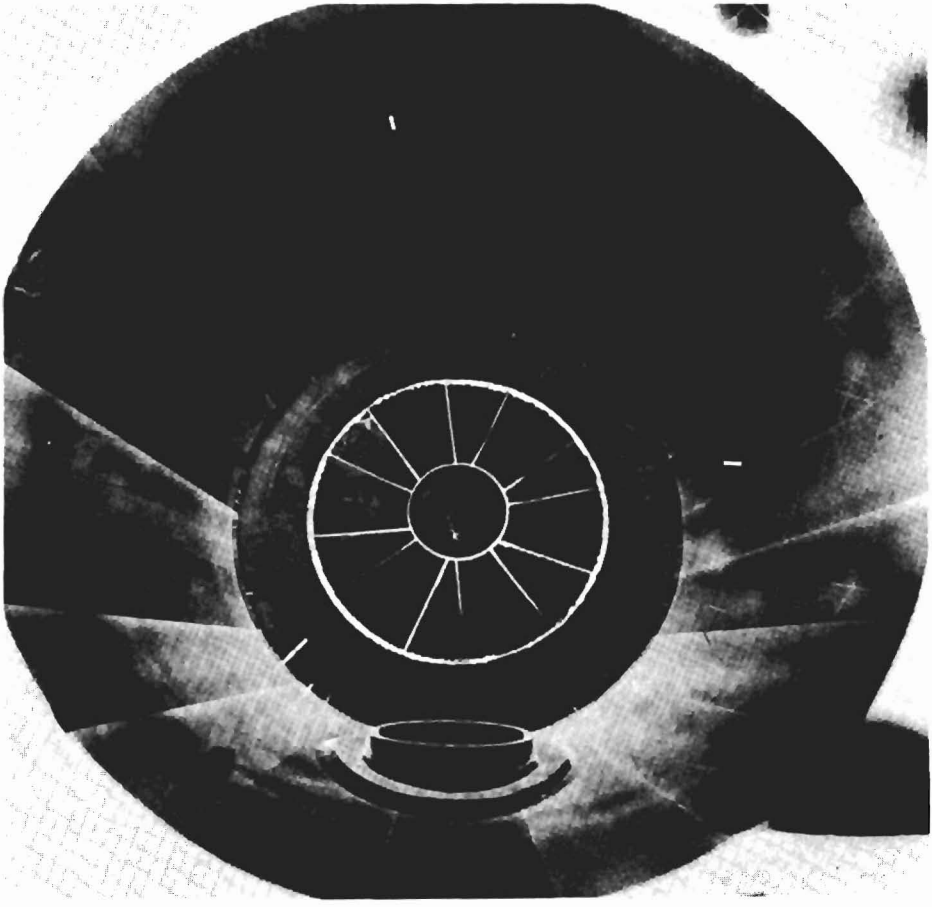

Figure 23. 7-foot Bubble Chamber Photograph Taken in June 1969 with the Chamber Full of Hydrogen and Partially Expanded

7-foot, by washing the metal surface with stainless steel liquid solder flux after degreasing and before the final water rinse. This has the effect of producing a light hydrochloric acid etch, and Scotchlite applied with its own adhesive to a stainless surface prepared in this way does not loosen in liquid hydrogen.

5. FILM TRANSPORTS

The film transports will be very similar to those used on the 7-foot, one of which is shown in Fig. 24. The primary difference will be in the length of the transfer section, which in the 25-foot case will need to be about 9 feet long. The system of air guides and air-bearing corners works well both for loading and for normal film advance, and a similar system has been used for the ANL 12-foot chamber film transports which have a 9-foot transfer section.

Film advance for a single frame will be accomplished by the mechanical drive using a pneumatic motor. For each additional frame desired within one pulse of the accelerator (multipulsing), a separate sinusoidally shaped transfer pocket is required, into which the film is driven by a jet of air. Film advance is accomplished in this way in the 7-foot cameras in about 20 msec and can be done for the somewhat longer 25-foot format in $\sim$ 25 msec, allowing a complete cycle time of $\sim$ 100 msec. This will approximately match the fastest possible re-cycle time of the chamber. Some further development work will be aimed at producing a mechanical drive capable of these short cycle times in order to eliminate the transfer pocket and associated valves and circuitry. However, with the necessity to avoid electric motors because of the magnet fringe field ($\sim$ 10 kG), the success of this development is not assumed in the current design.

The vacuum platens to hold the film flat for photography will be made from fused hollow glass fibers, in the same way as those for the 7-foot. These provide 25% of their surface area in open holes, thus making film pull-down and blow-off extremely rapid. They are capable of holding the film much flatter than required for a telecentric lens.

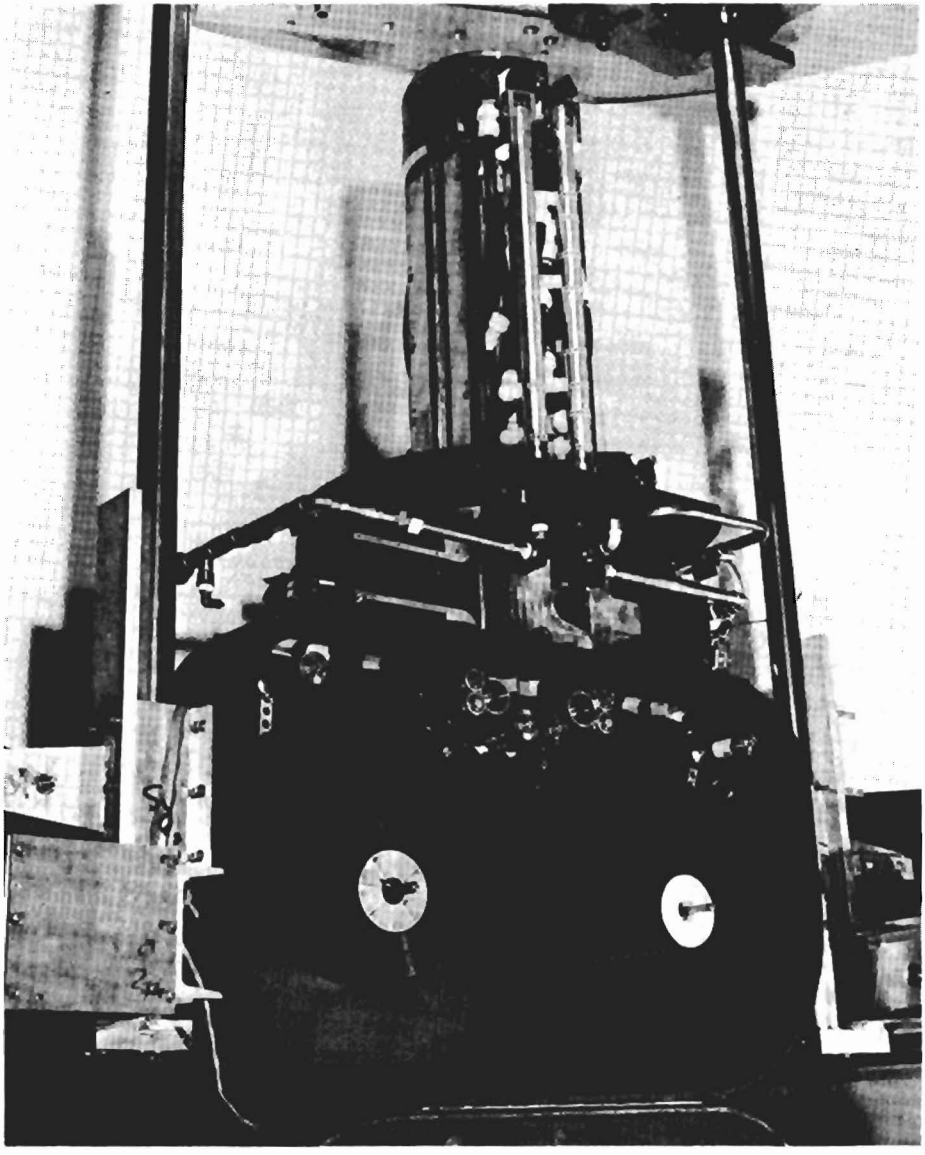

Figure 24. Photograph of 7-foot Camera

6. DATA BOX

The technology of semiconductor photoemitters is changing so rapidly, that it is unlikely that any choice of device made now to put Arabic and binary numbers on the film would be valid by the time construction actually starts. However, they will probably resemble the phosphorus-doped gallium-arsenide devices now manufactured by Monsanto. These have been recently tested and accepted for use on the BNL 80-inch, 31-inch, and 30-inch chambers. They are generally red emitters, but their spectrum overlaps that of Eastman Kodak 2482 film sufficiently to make their use practical. Data-box information proposed is shown in Fig. 22, page 74. These devices, together with integrated circuit chip drivers, are much cheaper than the matrices purchased for the 7-foot, but they did not exist at that time.

7. WINDOW VACUUM SYSTEM

A separate high-vacuum system is provided for the insulating spaces between the camera windows. It is extremely important that these optical windows remain free of any contaminants that would interfere with photography for extended periods of chamber running. An oil-less system, eliminating normal mechanical pumps and diffusion pumps, is provided for this purpose.

This system is shown schematically in Fig. 25 and is similar to the design used successfully on the BNL 7-foot chamber.

The piping arrangement is designed to provide flexibility and back-up, should any major component fail. Two separate ion pumping systems, each one capable of maintaining a vacuum of better than 10^{-7} mm, are provided. Separate manifolds are connected to the spaces between the cold chamber windows and the shield windows (designated as space 1) and for the spaces between the shield windows and the warm vacuum tank windows (designated as space 2). This arrangement allows for convective cooling over the inner surfaces of the heat-shield windows by introduction of gas into space "1" during cool-down, while maintaining a high vacuum in space "2".

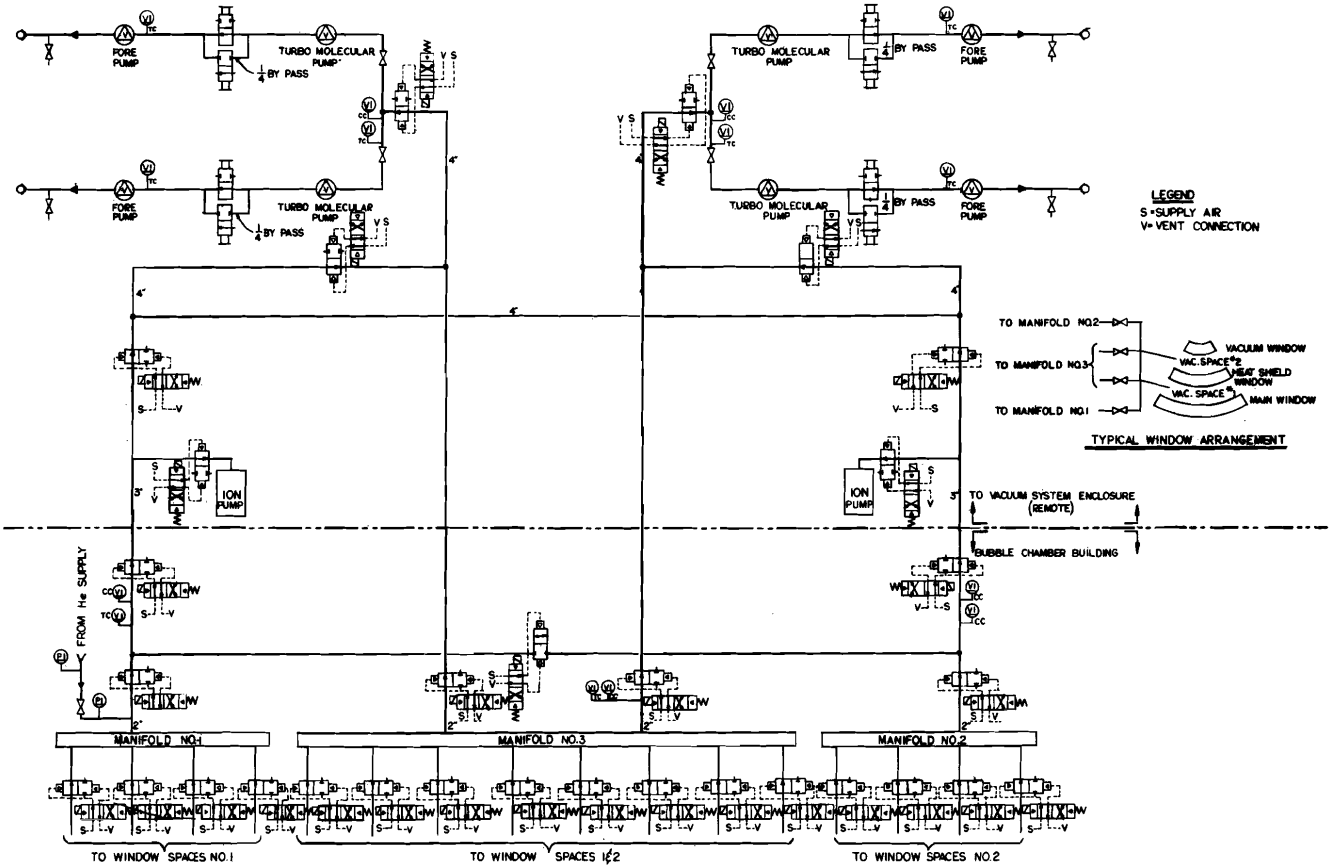

Figure 25. Window Vacuum System Schematic

The two turbomolecular pumping systems are provided to reduce the system pressure far enough during initial pump-down to enable the ion pumps to be turned on, and for back-up to the ion pumping systems in case of major leaks. If a major leak should develop in any of the high-vacuum spaces, the space can be valved into manifold "3", where it can then be pumped by the turbo-system. Automatically actuated valves will isolate any high-vacuum space in case of sudden pressure rise so that the other spaces will not be adversely affected.

8. OUTLINE SPECIFICATIONS

8.1. Windows and Lenses

a) Lenses (with windows)

Full field angle	130°
Image diameter	73 mm
Axial demagnification at beam plane	65
Front barrel diameter	54 mm
Axial numerical aperture	2 mm
Relative aperture	f/16
Limiting relative aperture	f/8
Integral distortion at 65°	0.5
Airy disc diameter at half maximum	12 μ
Chromatic spread in 560 mμ to 620 mμ range	3 μ

b) Windows

Location	Inside Radius (cm)	Outside Radius (cm)	Material
Chamber	15.0	20.0	Fused Silica
Heat Shield	9.0	14.0	Fused Silica
Vacuum Tank	6.0	7.25	Fused Silica

Concentricity and homogeneity such that a radial ray is deviated less than 2×10^{-5} radians.

c) Mounts

Designed to position window centers of curvature and lens entrance pupil coincident to within 0.005 in. and provide temperature transition from 25°K to 300°K.

8.2. Illumination

a) Flash Tubes — E.G. & G. modified FX-42A, toroidal, bore diameter 7 mm, arc length 31 cm, nitrogen gas cooled, 200 joules/flash.

b) Retrodirector — 3M Scotchlite Type SPR-1042 with selected small beads, mylar face.

8.3. Film Transports

a) Magazines — Use 70-mm film, Type II sprockets, capacity 2000 feet of 0.004-inch-thick film, multipulse film-advance cycle time 100 msec.

b) Transfer Sections — Carry film 9 feet to platen and back to magazine without scratching or axial drag using air bearings.

c) Platens — Fused hollow glass-fiber construction, hole diameter 0.8 mm, hole cross section 20% to 40% of surface, surface flatness held to 8 fringes.

8.4. Data Box

Monsanto MAN-1 type phosphorus-doped gallium-arsenide photo-emitting diodes, imaged on film by separate lens.

8.5. Window Vacuum System

a) Ion Pumping System (2 required)

Volume inside chamber	2 liters
Connecting header, 2 in. o.d. x 25 ft long	15 liters
Process piping, 3 in. o.d. x 100 ft long	142 liters
Total volume, including valves (approx.)	175 liters
No. of pumps required per system	1
Pumping speed	500 liters/sec (ea.)
Electrical characteristics	208 V, 19 amp, single phase

b) Turbomolecular System (2 required)

Connecting header	2 in. o.d. x 25 ft long	15 liters
Process piping	4 in. o.d. x 100 ft long	260 liters
Total volume, including valves (approx)		300 liters
No. of pumps per system		2
Turbo-pump capacity (per system)		520 liters/sec

8. Magnet

1. FOREWORD

It is generally recognized that the magnetic field intensity in which a bubble chamber operates should be as strong as is economically feasible, since the momentum accuracy for a given particle track length is approximately proportional to the magnetic field strength, and the band of momenta for which particles will be trapped in the bubble chamber is also proportional to the magnetic field strength. The operation of a cryogenic bubble chamber with liquid neon-hydrogen mixtures and with track-sensitive targets emphasizes the requirement for high magnetic field intensities.

Until recently, bubble chambers were usually equipped with conventional magnets with water-cooled copper coils and iron flux return paths. For large conventional magnets, both capital costs and operating costs increase steeply for magnetic field intensities above the saturation flux density of iron, i.e., above 20 kG. In the past few years, developments in superconductor technology have made feasible the construction and safe, reliable operation of superconducting magnets which can economically generate magnetic fields of increased intensity over large volumes. Two such superconducting magnets, using stabilized superconductors cooled by liquid helium in a magnet dewar, have been completed for bubble chambers.[5] Several other large superconducting magnets, one of which will use hollow superconducting conductor for the coil windings, are being designed or constructed.[6]

The magnet proposed for the 25-foot cryogenic bubble chamber is an air-core superconducting split-pair magnet designed to generate a magnetic field intensity of approximately 40 kG averaged over the bubble chamber volume. The magnet coils are separated by a bridge structure which permits entry of particle beams to the bubble chamber inside the magnet coils. The magnet and bubble chamber are enclosed by a common vacuum tank. The magnet conductor configuration, the magnet coil assembly, instrumentation, and the magnet power supply are considered. The superconducting air-core design for the large magnet and relatively high field intensity gives substantial savings in magnet costs and power for operation and also makes more accessible the component parts of the bubble chamber assembly.

To eliminate the need for a magnet helium dewar and to achieve a magnet coil configuration that is compact and mechanically strong, a hollow stabilized superconducting conductor cooled by an internal flow of helium is being considered for the 25-foot chamber magnet. There are presently greater uncertainties in the estimates of the costs of hollow superconducting conductors than in those for strip superconducting conductors. Therefore, sufficient funds are included for the magnet to permit construction of a strip conductor superconducting magnet and associated magnet dewar, similar in concept to the Brookhaven National Laboratory 7-foot bubble chamber magnet, should the costs of the hollow conductor exceed those of the strip conductor magnet and dewar system.

2. MAGNET CONDUCTOR

Hollow stabilized superconducting conductors which consist of a number of superconducting filaments embedded in the wall of a copper or aluminum tube of square or rectangular cross section recently have been fabricated. These conductors may be cooled by an internal flow of helium which is maintained at pressures above its critical pressure of 2.23 atm to prevent the formation of two phases within the conductor and the consequent degeneration of heat transfer. Conductors of this type have been used at CERN to construct superconducting magnets which have been operated successfully. Fig. 26 shows a two-channel conductor made by

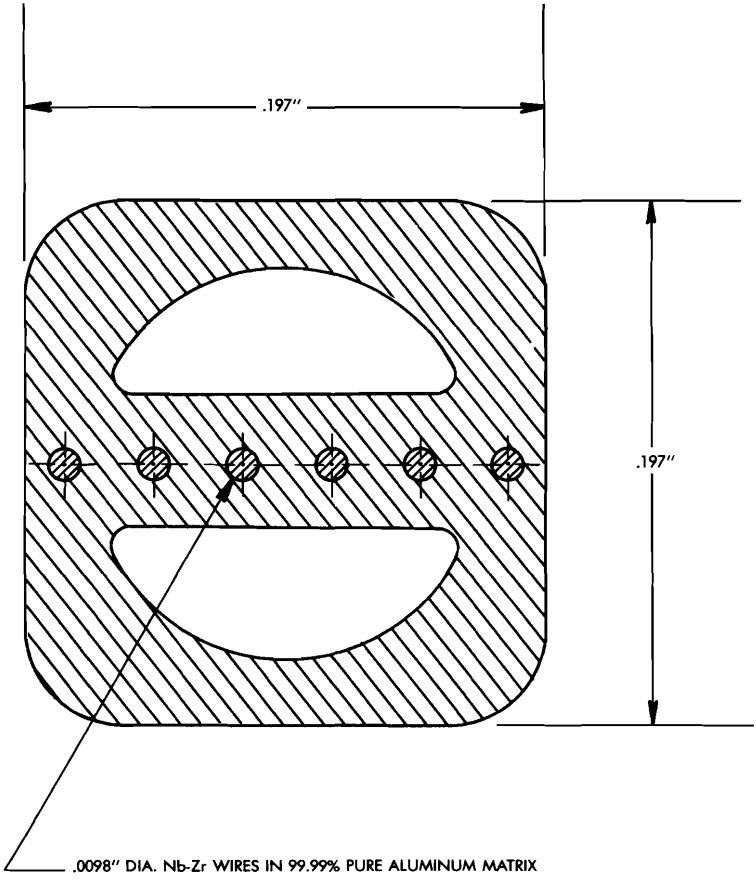

Figure 26. Cross Section of Conductor Used in CERN Test Coil

embedding superconducting NbZr filaments in aluminum which, when wound in a 2.36-in. bore magnet, 6.7 in. long, generated a magnetic field intensity of 28 kG at a current of 900 A. Approximately 1000 ft of conductor were used to wind the magnet coil.

A second conductor used at CERN with superconducting NbTi filaments in copper is shown in Fig. 27. This conductor, which was made in continuous lengths up to 650 ft long, has a cross section of 0.26 x 0.20 sq in. and a cooling channel cross section of 0.15 x 0.09 sq in. Approximately 8200 ft of this conductor were wound in an 11.0-in. bore magnet, 17.7 in. long, shown also in Fig. 27, which generated a magnetic field of 50 kG at a current of 1400 A.

Figure 28 shows the hollow conductor proposed for the 10-foot inner diameter, 18-kG CERN Omega magnet. This conductor, which consists of superconducting NbTi filaments embedded in copper, has a cross section of 0.71 x 0.71 sq in., with a cooling channel 0.35 x 0.35 sq in. It is designed to carry 5000 A at 35 kG. Approximately 40,000 ft of this conductor are required for the Omega magnet.

Good thermal and electrical contact between the superconductors and a normal conductor stabilizing material, such as copper, is achieved by metallurgically bonding superconducting filaments in the normal conductor. This type of bond has the greatest strength and has a minimum number of voids between the superconductor and normal conductor. Enough normal conductor and sufficient cooling are generally provided so that the magnet current can transfer to the normal conductor, if a transient instability such as a flux jump occurs, without the temperature at the superconductor rising above that at which it makes the transition from the superconducting to the resistive state. The amount of normal conductor and cooling must also be sufficient to prevent the magnet from suddenly becoming completely resistive if the critical current is exceeded in the magnetic field at the superconductors. The normal conductor material in which the superconducting filaments are bonded not only provides a means of stabilizing the superconductors but also aids in supporting the electromagnetic forces to which the magnet windings are subjected. The amount of normal conductor to be bonded to the superconducting

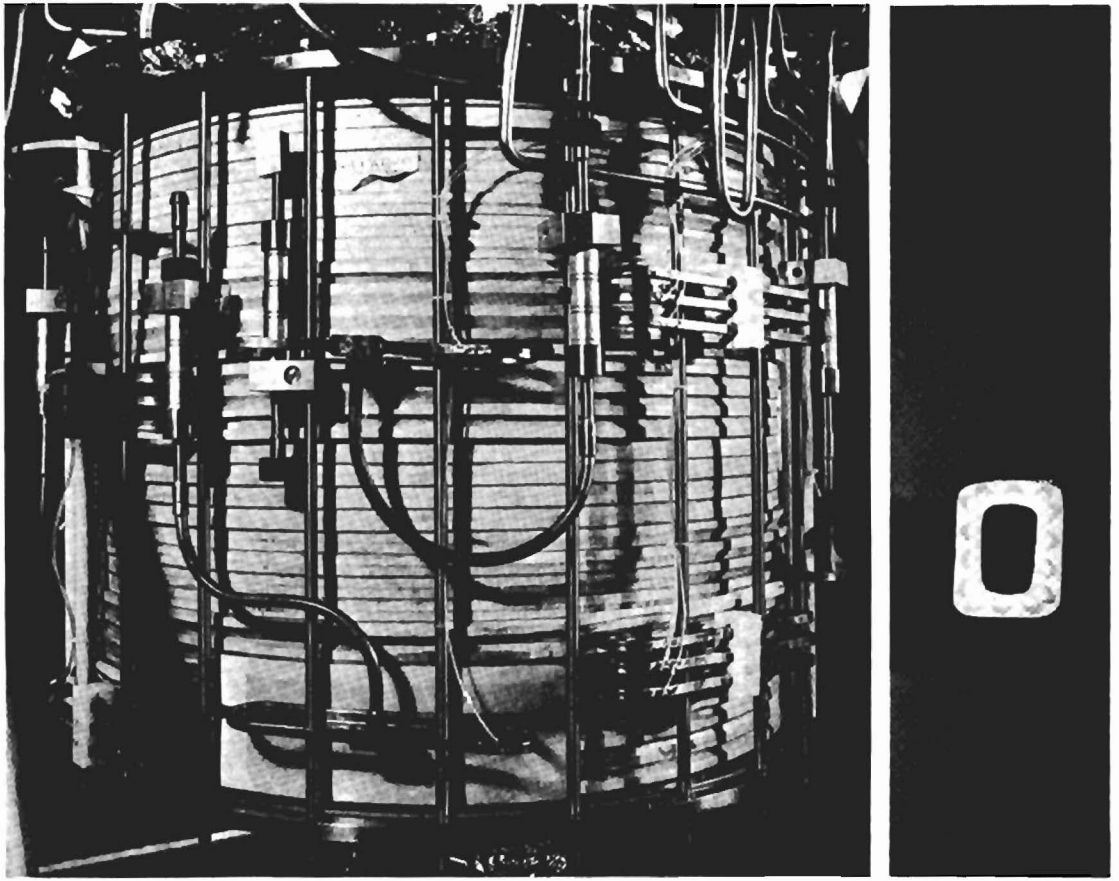

Figure 27. Photograph on right is of cross section of hollow superconductor showing filaments of NbTi imbedded in Cu as used in CERN test magnet which is shown on the left.

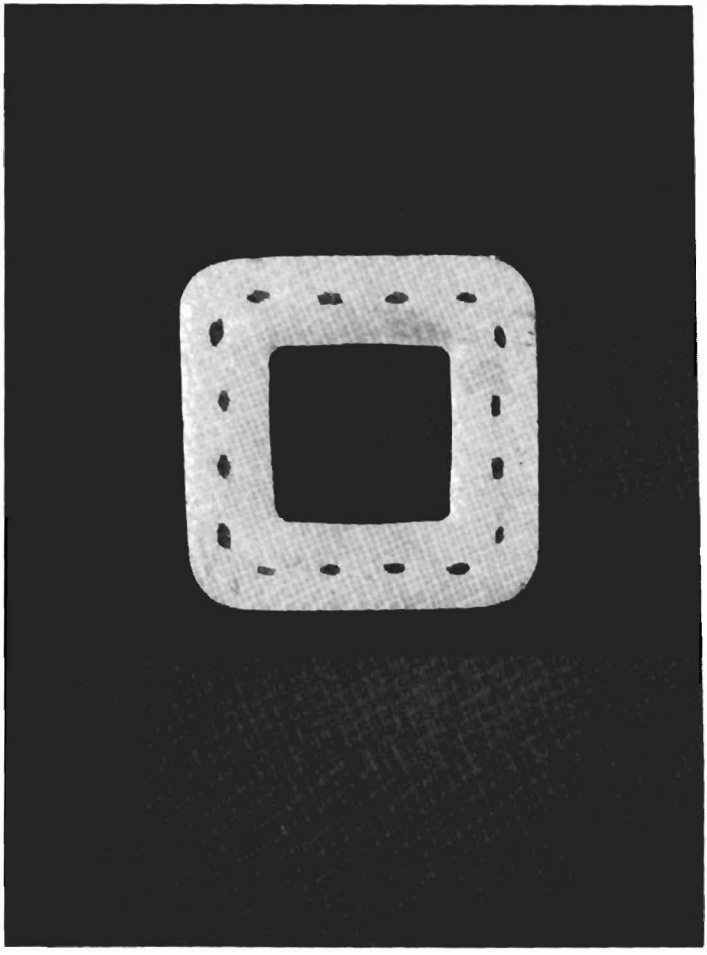

Figure 28. Photograph of Cross Section of Hollow Superconductor as Proposed for CERN Omega Magnet

filaments for stabilization for a given magnet current depends on the size of the superconducting filaments, the rate of heat transfer from the conductor to the helium coolant, the heat capacity of the conductor, and the resistivity of the normal conductor. The resistivity of the normal conductor is a function of its purity, of the stress in the conductor, and of the magnetic field intensity at the conductor. For magnets designed to generate intermediate field intensities where the magnet windings are subjected to large forces and the magnetoresistivity of the windings is not an over-riding consideration, the use of copper as the normal conductor material usually permits a design for substantially higher stress levels in the conductor than does the use of aluminum. OFHC copper, which is readily available commercially with a resistivity ratio of $\rho_{300^\circ K}/\rho_{4.2^\circ K} = 200$, has been selected as the normal conductor material for the 25-foot chamber magnet.

The rate of heat transfer from the conductor to the helium coolant depends on the temperature difference between the surface of the conductor and the coolant, on the heat transfer coefficient for the surface, and on the surface area in contact with the helium. The use of an internal flow of helium above its critical pressure of 2.23 atm insures that cooling is continuously brought to all parts of the magnet conductor by a positive single-phase fluid flow. Recent results from CERN indicate that heat transfer coefficients greater than 0.4 watts/$^\circ$K cm^2 may be achieved with this method of cooling. Experimental and theoretical work is also currently in progress at the National Bureau of Standards and several other laboratories to evaluate helium heat-transport properties in the temperature and pressure regions applicable to the hollow conductor design. Since the total volume of helium in contact with the conductor in the hollow conductor design is less than that required to cool the magnet by pool boiling, liquid and gas storage requirements may be minimized.

Recent work in several laboratories has indicated that by reducing the size of superconducting filaments below certain lower size limits, the stability of these filaments against transient phenomena such as flux jumps may be significantly increased. However, if the superconducting

filaments are incorporated with a normal metal to form a composite conductor for a magnet winding, magnetization currents may be induced in the filaments when the magnetic field is changing. These currents flow in opposite directions and can give rise to voltages between the filaments. These voltages drive eddy currents through the normal metal and thereby generate losses which can result in thermal instabilities. The incidence and magnitude of this effect depends on the geometry of the conductor and may be minimized by twisting or transposing the superconducting filaments within the conductor.

The 25-foot bubble chamber magnet is designed with 3.2×10^7 ampere-turns to generate a central field of about 38 kG with an average magnetic field intensity of approximately 40 kG over the chamber volume. At this average field, the magnetic field intensity across the magnet windings varies up to a maximum value of 65 kG. Since the current-carrying capacity of a superconductor is a function of the magnetic field, increasing as the field decreases, consideration is being given to grading the amount of superconductor in the various lengths of conductor so that only amounts appropriate for the positions of the conductor lengths in the magnet windings are used.

The interaction of the magnet current with the magnetic field at the windings gives rise to large electromagnetic forces which subject the magnet coil to total radial pressures of about 3000 psi. Because the resistivity of copper begins to increase rapidly for stresses above 20,000 psi, the design stress for the 25-foot magnet conductor has been limited to a maximum of 16,000 psi. The stress in the copper could initially be limited to this value by greatly increasing the amount of copper in the conductor. However, since copper is essentially a plastic material at levels of stress that are practical, each magnet power cycle would cause some permanent deformation of the copper. The resistivity of the copper would increase and the magnet coils would "grow".

To aid in supporting the stresses in the magnet windings, to limit deformation of the copper conductor, and to reduce the amount of copper required, a reinforcing or stiffener strip or strips of a high-strength material such as stainless steel or phosphor bronze is wound in the magnet

coil windings with the hollow conductor. An analysis of the stresses in the 25-foot magnet indicates that a stainless steel strip or strips, having a total thickness of 0.25 in., is stressed to 30,000 psi at the full magnet current of 8000 A and limits the stress in the copper of the composite conductor to the design value. The thermal properties of copper and stainless steel are such that effects resulting from differential thermal contractions or expansions are not severe.

A thin strip of epoxy-impregnated fiberglas is also wound in the magnet coil between the surfaces of the hollow conductor and the stiffener strip to provide turn-to-turn electrical insulation. Sufficient mechanical rigidity for handling a single-layer magnet coil pancake is obtained by bonding together the three components of the magnet coil windings with an epoxy adhesive.

A schematic of the proposed magnet coil configuration is shown in Fig. 29(a). Several types of copper-multifilament superconductor composites being investigated for the 25-foot bubble chamber magnet are also shown. The single cooling channel conductors in Fig. 29(a) and 29(b) are typical of hollow conductors which have been and are being produced commercially. Since these conductors are probably fabricated by processing a single composite billet of copper and superconductor, there may be rather severe limitations on the continuous lengths of such conductor which are available.

The conductor configurations shown in Fig. 29(c) and 29(d) are examples of other types of conductors which are being considered. These conductors have multiple cooling channels and may be designed to give increased surface area for heat transfer. They consist of an inner core of copper in which are embedded the superconducting filaments. Around the inner core and, ideally, metallurgically bonded to it is a jacket of stainless steel (Fig. 29(c)) or copper (Fig. 29(d)). The stainless steel jacket has the potential advantage of giving added strength to the conductor with a reduced wall thickness; the copper jacket has the potential advantage of providing additional stabilizing material. Since this type of conductor consists initially of two separate parts, the inner core and the jacket, it is likely that longer continuous lengths

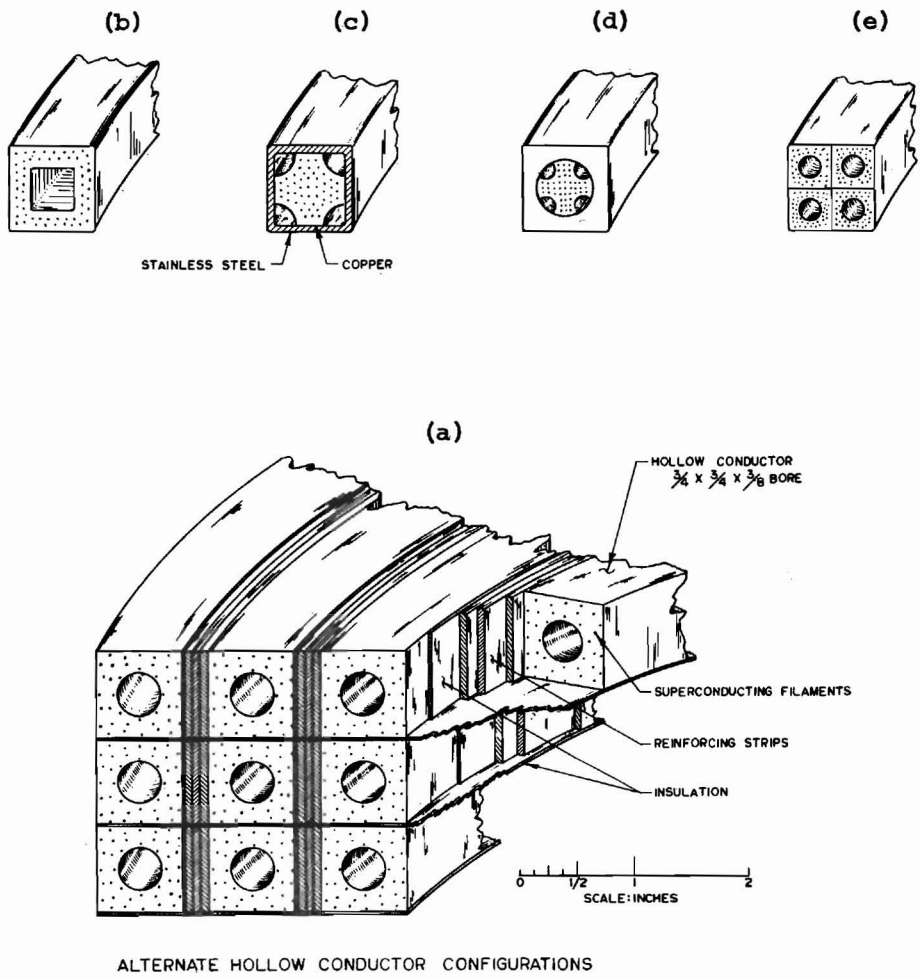

Figure 29. Four Possible Hollow Superconductor Configurations and Isometric View of a Section of the Coil with a Square Conductor and a Single Round Hole

of such conductor will be available than in the case of conductors made from a single composite billet.

Figure 29(e) illustrates another possible conductor configuration in which four smaller conductors are wound (four-in-hand) and bonded together in parallel to form a single conductor whose overall dimensions are the same as those of the other conductors shown. The "four-in-hand" conductor provides multiple cooling channels for increased surface area for heat transfer and may be obtained in longer continuous lengths than a single conductor of the same overall size.

In a detailed design of a hollow superconducting conductor, consideration must be given to the superconducting characteristics of the conductor and to the properties of the helium coolant. Mechanical aspects of the design must also be evaluated to insure that the conductor or the conductor jacket can support the pressure of the internal helium flow and can support and transfer the radial and axial electromagnetic forces.

Electron-beam welding techniques have been used successfully to make joints between lengths of hollow superconducting conductor for the CERN magnets. These joints may be shunted electrically, if necessary, by soldering thin strips of stabilized superconductors to the outside surface of the hollow conductors across the joints. A program to investigate these techniques has been initiated at BNL.

3. MAGNET ASSEMBLY

The 25-foot bubble chamber magnet will be a split-pair of coils, each coil consisting of 60 single-layer pancakes as shown in Fig. 7, page 32. The pancakes are insulated from each other by sheets of fiberglas-reinforced epoxy 0.092 in. thick. Each pancake is made self-supporting against radial forces by clamping the free ends of the conductor and stiffener strip at the inner and outer diameters of the pancake to the free ends of neighboring pancakes. All layers of the magnet are connected in series electrically with stabilized superconducting conductors soldered and clamped to the ends of the pancakes. The magnet pancakes are connected in parallel for cooling, with the helium flow entering each layer at its inner diameter from a supply manifold and leaving each layer at

its outer diameter to an exhaust manifold. The series electrical circuit may be isolated electrically from the parallel cooling circuit by a device similar to that shown in Fig. 30. This device, which was fabricated at CERN, consists of a number of anodized aluminum sleeves assembled between stainless steel caps through which protrude stainless steel tubes for the helium coolant. Pressure-tight joints between the individual components of the assembly are achieved by using thermal shrink-fit techniques. Excellent electrical insulation is provided by the multiplicity of anodized aluminum surfaces.

The single-layer pancakes are stacked in modules of 15 pancakes to permit handling and assembly with available equipment. These modules are clamped with insulating plates at the top and bottom of each module through which are passed vertical rods at the inside and outside diameters of the module. The insulating plates cover slightly less than one-half the flat surfaces of the module and are so positioned that they fit between the insulating plates of neighboring modules. Radial spacers are attached to the vertical rods to help position each pancake in a module and to retain the windings in the event that adjustments of the end clamps or connections are necessary.

Four modules are stacked vertically for each of the 60-layer magnet half-coils. Each magnet half-coil is 4 ft 6 in. high and has an inner diameter of 23 ft 8 in. and an outer diameter of 29 ft 3 in. The two coil assemblies are separated by 5 ft to allow for particle-beam entry to the bubble chamber. This large coil separation permits the winding of magnet coils of a smaller diameter, reduces the axial forces on the coils, and improves the uniformity of the magnetic field over the bubble chamber volume. It also permits the curved beam window section of the bubble chamber to extend into the gap between the coils. An elevation view of the magnetic field intensity plot is shown in Figs. 31 and 32. With a current of 8000 A in the windings, and an average magnetic field of 40 kG over the chamber volume, the two coils of the magnet are attracted to one another with a force of approximately 30,000 tons. This force between the coils is supported by a bridge structure which is reinforced around the chamber beam window so that a large aperature

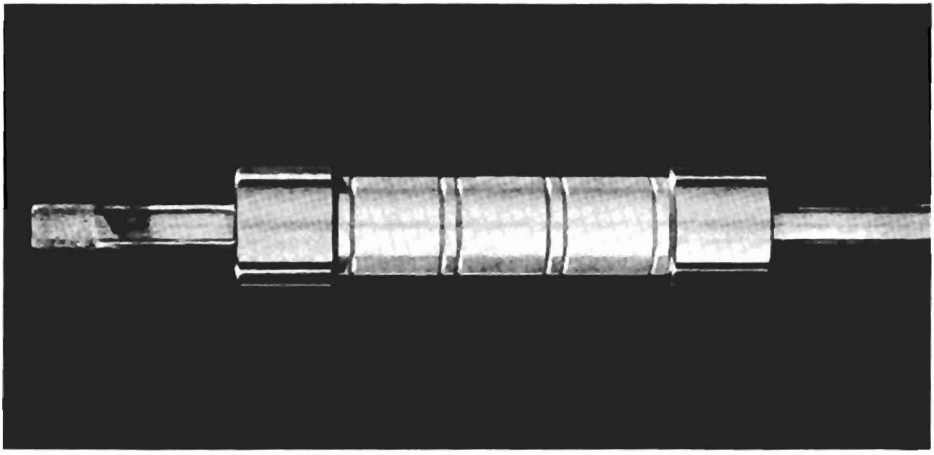

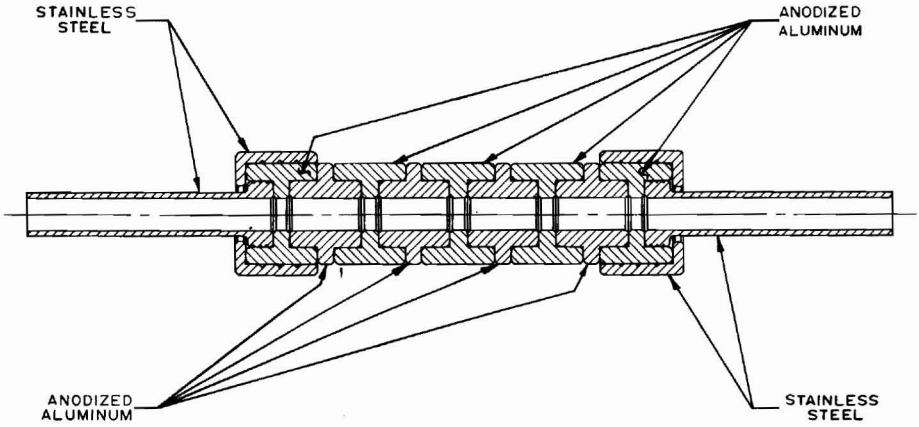

Figure 30. Photograph and Drawing of Helium Cooling Connector

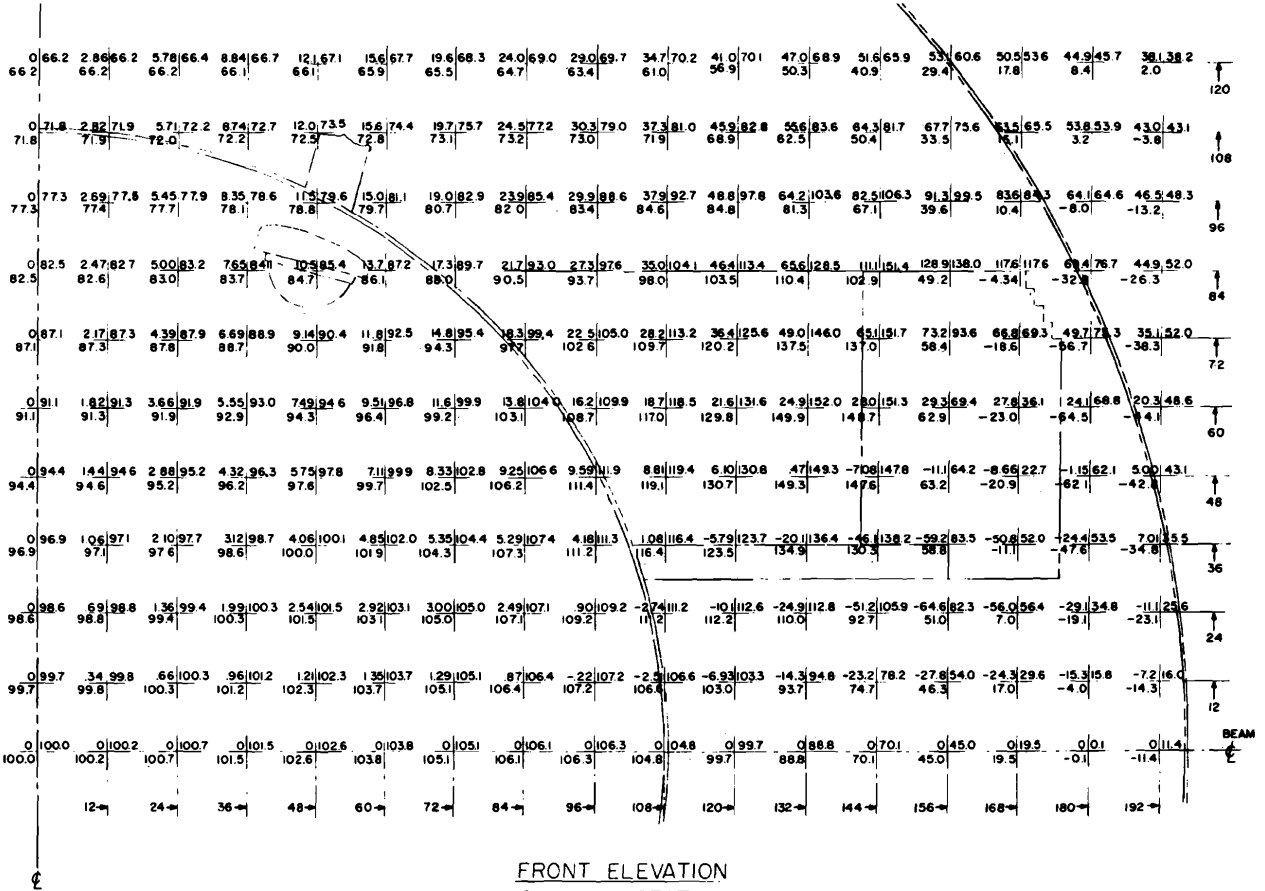
FRONT ELEVATION
QUARTER SECTION
RADIAL FIELD STRENGTH | TOTAL FIELD STRENGTH
VERTICAL FIELD STRENGTH
FIELD STRENGTHS EXPRESSED IN PERCENT OF FIELD STRENGTH AT INTERSECTION OF VERTICAL ℄ AND BEAM ℄.
BEAM ℄
℄

Figure 31.

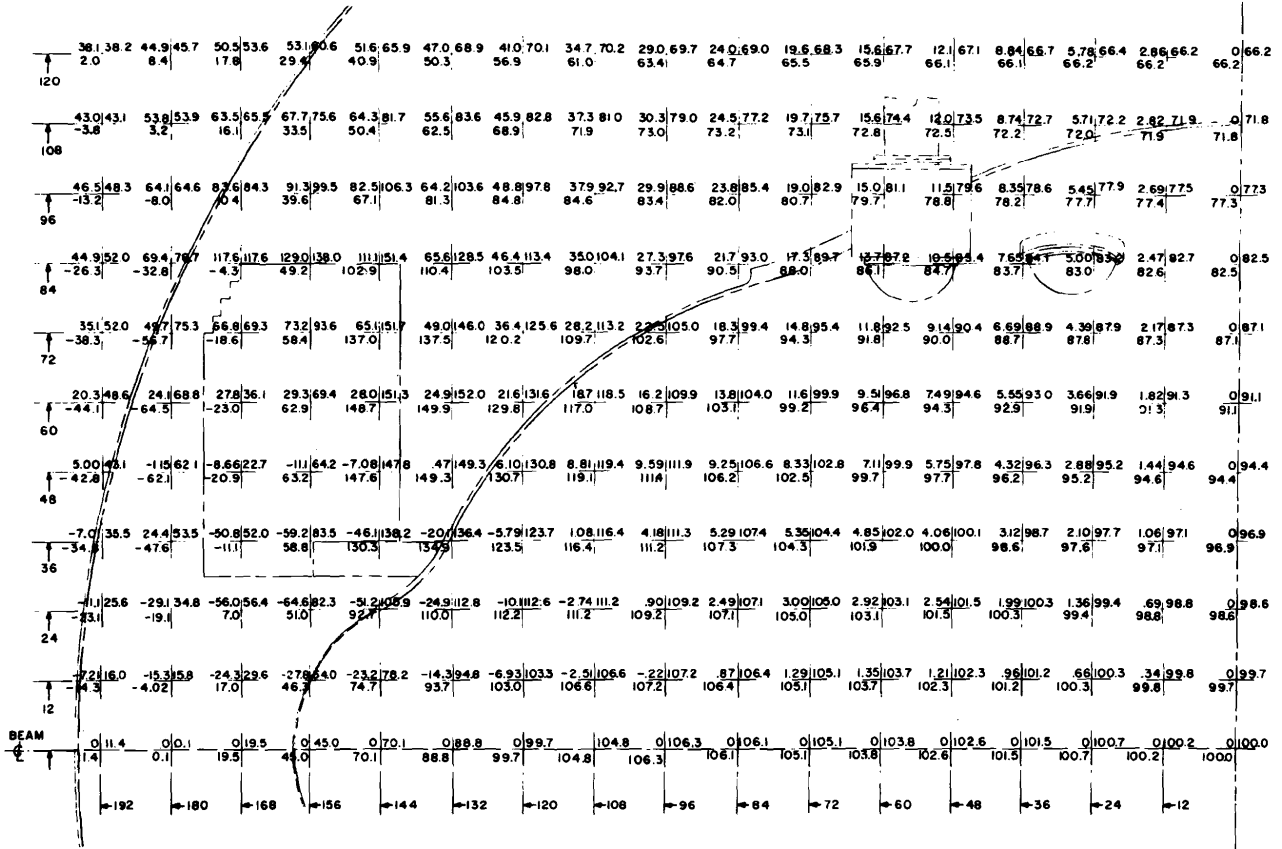

SIDE ELEVATION
QUARTER SECTION

RADIAL FIELD STRENGTH | TOTAL FIELD STRENGTH
VERTICAL FIELD STRENGTH

FIELD STRENGTHS EXPRESSED IN PERCENT OF FIELD STRENGTH AT INTERSECTION OF VERTICAL ℄ AND BEAM ℄

Figure 32.

4 ft high by 5 ft 6 in. wide at the inner diameter of the coils and 1 ft 3 in. high by 4 ft 9 in. wide at the outer diameter of the coils is available in the bridge structure for beam entry.

The top magnet half-coil is clamped to the bridge structure with vertical rods at the inside and outside diameters of the magnet. The bottom magnet half-coil is clamped between the bridge structure and coil-support structure by similar rods. These rods serve to align the coils. The coil-support structure is mounted on six legs, to which hydrogen cooling loops are attached, designed to carry the total weight of the magnet and bridge structure of approximately 400 tons in the vacuum tank. Thermal insulating pads are placed between the coils and the coil bridge and between the bottom coil and coil-support structure to minimize the heat leak to the coils. A hydrogen-cooled radiation shield is placed between the magnet and the vacuum tank. Multilayer thermal insulating material is used between the magnet and bubble chamber, between the magnet and radiation shield, and between the radiation shield and the vacuum tank. General magnet parameters are given in Table VI.

Table VI. General Magnet Parameters

Average Magnetic Field Intensity	~ 40 kG
Ampere-turns	3.2×10^7
Coil Current	8000 A
Total Turns	4000
Number of Pancakes	120
Turns Per Pancake	33
Total Conductor Length	332,000 ft
Inductance	100 henries
Stored Energy	3.2×10^9 joules
Weight of Magnet Coils	400 tons

4. POWER SUPPLY AND INSTRUMENTATION

The stabilized superconducting magnet is connected to an external, current-regulated, voltage-limited, air-cooled power supply. The power

supply, which operates from a 440-V, silicon-controlled, rectifier-regulated primary, is a rectifier-type supply rated for 8000 A at 20 V. The supply is capable of charging the magnet to the maximum field of about 40 kG in 10 hours.

Shunt diodes are provided at the supply terminals which automatically discharge the magnetic field energy safely and slowly through the decay path formed by the diodes and power cables in the event of a power failure. Provision will also be made to reduce the field energy to 30% of its maximum value in 20 min by opening a circuit breaker to connect the magnet in series with an external discharge resistor. The discharge resistor will be an assembly of 10 tons of steel plates, electrically connected by silver-soldered and bolted copper straps, immersed in a water bath. The complete discharge of 3.2×10^9 joules of magnetic field energy to the resistor will raise the temperature of the resistor and the water to about $95^{\circ}C$.

Conventional flexible copper cables are used for the magnet current leads between the power supply and the bubble chamber vacuum tank. The current leads through the vacuum tank into the vacuum space are cooled by boil-off gas from a hydrogen reservoir which maintains the ends of the leads near the magnet at about $25^{\circ}K$. The magnet is connected to the cold ends of these leads by geometrically optimized, stabilized superconducting strips.

The magnet temperature will be monitored with thermocouples and carbon resistance thermometers, and the pressure of the helium in various parts of the magnet and cooling system will be recorded. Taps for measuring the voltage across joints, individual magnet pancakes, and the entire magnet will be installed. Pick-up coils to observe the rate of change of magnetic field will also be incorporated in the magnet assembly. Experimental heaters will also be installed in several locations in the windings to produce thermally normal regions so that information on recovery characteristics may be obtained. The magnitude of the magnetic field will be controlled by regulating the current, using nuclear magnetic resonance probes to monitor the field intensity and spacial distribution.

9. Instrumentation and Controls

1. FOREWORD

The instrumentation and controls for the 25-foot bubble chamber will be remoted to a central control room to accomplish a safely removed point of control and a magnetic environment of sufficiently low field to allow the use of standard equipment. The chamber-complex information and controls will be arranged in an integrated systems fashion in a purposefully small area--much the way a pilot's instruments are grouped about him. Full advantage will be taken of the latest advances in available controls, the organization of the recently designed 7-foot bubble chamber control room, six years of large-chamber operating experience at the 80-inch bubble chamber control room, and the operating experience of the 30- and 31-inch chambers.

A detailed description of the instruments and controls proposed is prohibitively lengthy. The section that follows touches on those major points characterizing the 25-foot design and is based largely on the 7-foot bubble chamber experience, which in turn incorporates many of the improvements of the 80-inch bubble chamber over the years.

2. CONTROL ROOM

The control room has an area of 700 sq ft and a rack layout similar to that of the 7-foot bubble chamber (see Fig. 33), with increased monitoring and control density (see Fig. 34). It is provided with temperature and humidity controls, a computer floor to allow for cable and utility runs, and indirect fluorescent lighting above removable translucent ceiling panels.

The control room is located approximately 200 ft from the bubble chamber for personnel safety reasons, and to reduce the stray field of the superconducting magnet to 6.8 gauss. The only significant effect of this field is a 1-cm deflection of oscilloscope traces.

The main control area, the twelve central racks, will be organized, left to right, into major subsystems: magnet, beam monitoring, expansion, cameras, refrigeration, and vacuum. The organization within each subsystem

BNL 80-inch bubble chamber control room, left side.

BNL 80-inch bubble chamber control room, right side.

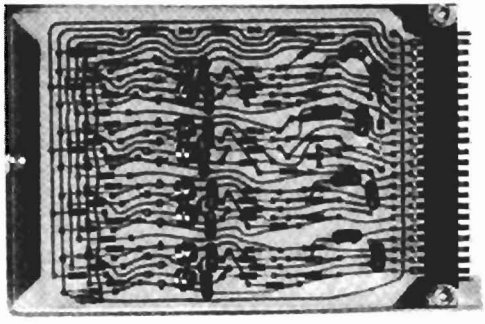

Decrease in electronic component size in the last few years. Newest units at bottom.

BNL 7-foot bubble chamber control room, left side.

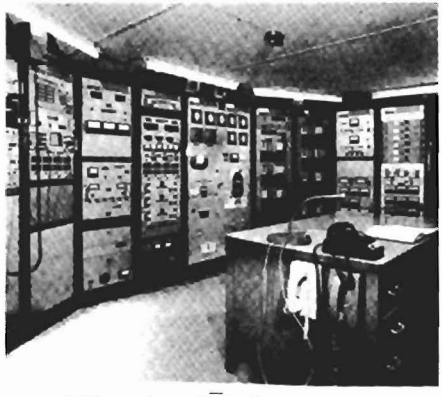

BNL 7-foot bubble chamber control room, right side.

Figure 33. Difference in size of control room lay outs at BNL's 80-inch bubble chamber (top) and 7-foot bubble chamber (bottom) is largely due to greater electronic packaging density.

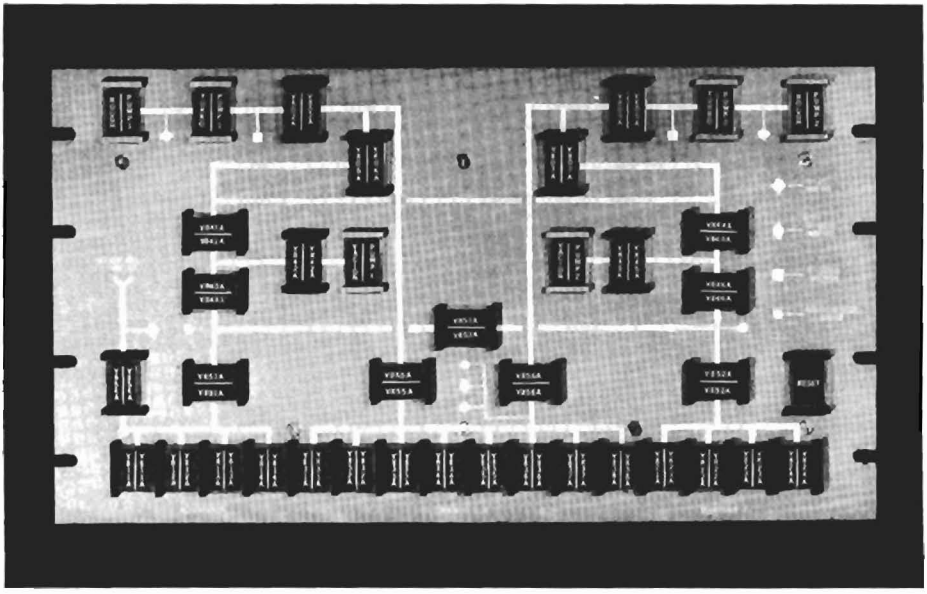

Figure 34. The window vacuum control panel at the BNL 7-foot bubble chamber, which is typical of other control panels, illustrates the characteristic extent and density of operator controls. Note that all the split-screen switches are functional.

area will put the more critical and frequently used controls in the upper half of the rack(s). The canted overhead space will contain information displays, alarm annunciators, and T.V. monitors in subsystem area association. The racks are arranged to put the chief operator's desk (console) at the focal point of the main control area. The support equipment requiring little or no operator attention is collected in the four ancillary racks physically removed from the main control area. Two cross-connect racks are provided for the interconnection of the control room racks, and the control room racks and the bubble chamber.

3. INTERCONNECTING CABLES AND PNEUMATIC TUBING

The interconnecting cables will run in trays beneath the control room computer floor from the individual racks to the cross-connect racks, and in turn in the elevated trays through the control building, and along the weather-proof corridor connecting all the buildings. The cables (multiple twisted, shielded, and insulated pairs) will terminate in junction boxes located at the various facilities. Pneumatic tubing will parallel the cable runs under the computer floor and in the elevated trays terminating to junction boxes. We hope to run many fewer pneumatic lines for the 25-foot bubble chamber than for the 7-foot bubble chamber (see Electronic Loop Control, page 108).

4. BUBBLE CHAMBER COMMUNICATIONS

Coordination of operations throughout the bubble chamber complex is accomplished in the control room. To insure overall communications, a 100-watt public address system links the control desk with the furthest reaches of the complex. The outlying areas are in communication through a direct phone line system and multi-channel headset system (special piezoelectric headsets serve the chamber area). Any remote station can be put in contact with any other by calling the control room. The control room can audio monitor all such communications.

Coverage for those areas in which a fixed station is unsuitable is accomplished with FM hand-held receiver/transmitters and a 60-watt central relay station located in the control building. The control room receiver/transmitter will be open to receive calls at all times.

5. MONITORING EQUIPMENT

The chamber operator will be assisted by fixed-position and scanning (pan, tilt, and zoom) closed-circuit T.V. cameras and control room monitor displays. A video switched supervisory monitor will be provided at the control desk.

The process alarm system incorporated in the 25-foot control room will represent the latest generation in an evolution begun in 1963 at the 80-inch chamber and improved in 1966 for the 7-foot chamber. The system uses plug-in circuit cards to monitor any steady-state or coincident process that is, or can be transduced to be, electrical in nature. The operator is provided a selection of modes (test, arm, disarm) and alarm point (for analog information) to accommodate all phases of chamber operation (see Fig. 35).

Visual and priority ordered audio indications bring an alarm to the operator's attention. The alarm, even if transient in nature, is stored by the alarm system. Acknowledgement by the operator is required to silence the audio. The alarm can be reset if, and only if, the alarm condition has been removed. A hard-copy record of all alarms, chronologically ordered and tagged, is automatically maintained by monitoring logic and a twelve-column printer.

An independent fire-alarm annunciator panel located in the main control racks will assure immediate response to the appropriate zone in the event of fire. A supervisory tie-in with the National Accelerator Laboratory Fire Department will be established.

Continuous, fail-safe monitoring in potentially hazardous gas areas will be accomplished by a hydrogen gas detection network utilizing fast-response palladium-catalyst thermistor heads. Gas indications are made both independent of, and by, the process alarm system as a safety measure. Gas indications from the chamber house and the hydrogen compressor shed will directly operate the emergency fans and air-intake louvers in the affected area.

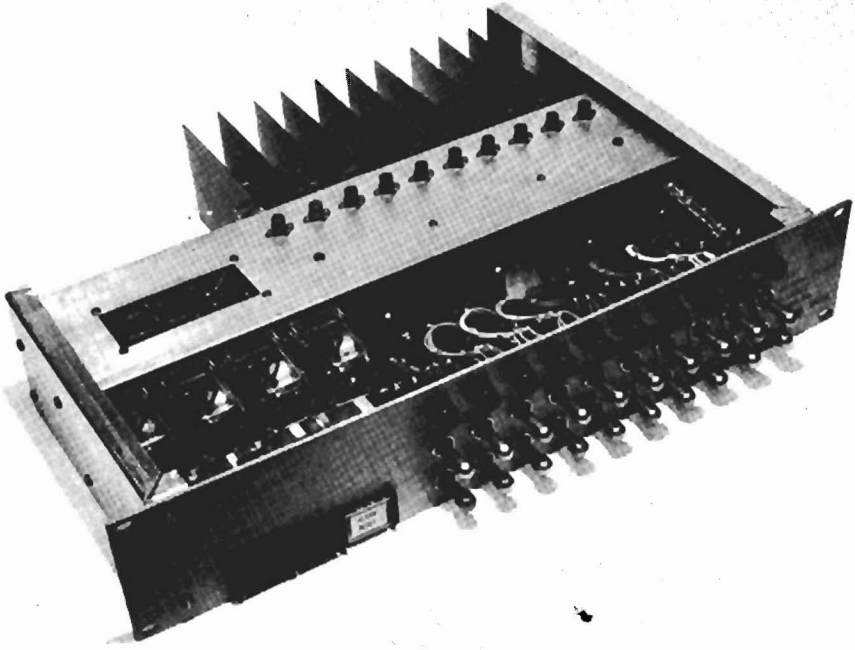

Figure 35. Ten-station alarm unit with individual function plug-in boards; test, acknowledge, arm/disarm capability, and common rest. This unit has proved effective in service at BNL's 80-inch and 7-foot bubble chambers.

6. INSTRUMENT AIR SYSTEM

The system, as shown in Fig. 36, consists of three sections: (1) a compressor system supplying 400 scfm at 115 psig, (2) a stand-by supply good for 8 hours at 100 scfm and 90 psig, (3) high-pressure storage bottles to be used if both of the above systems and/or electric power failed.

Section 1 consists of two nonlubricated air compressors capable of supplying 200 scfm at 115 psig. These compressors are followed by an aftercooler and cyclone separator, a dual-tower dryer, and two filters. The clean dry compressed air is stored in a 100-cu-ft receiver. It is distributed from this receiver to the control room and the high bay.

Section 2 consists of tankage (50,000 scf) pressurized to 400 psig by an air-boost pump to provide 8 hours of continued operation.

Section 3 consists of two "A" bottles (224 scf each) of nitrogen and a regulator. This pressure source will allow the chamber and expansion system to be controlled and dumped if necessary.

All systems will have remote reading pressure transducers connected to a fail-safe alarm system continuously monitored in the control room.

7. REMOTE OPERATION OF POWER EQUIPMENT

All major power equipment will be remotely operated at the control room by low-voltage control circuits located in one of the ancillary racks. The remote operation allows the equipment to be turned on and off, provides equipment status lights, and process alarm monitoring.

In the event of power failure the equipment is automatically locked out until manually restarted. This feature prevents excessive starting loads which would occur if all motors started simultaneously as power is restored. The remote operation provides the operator with the means to bring all the equipment back on line in an orderly sequence.

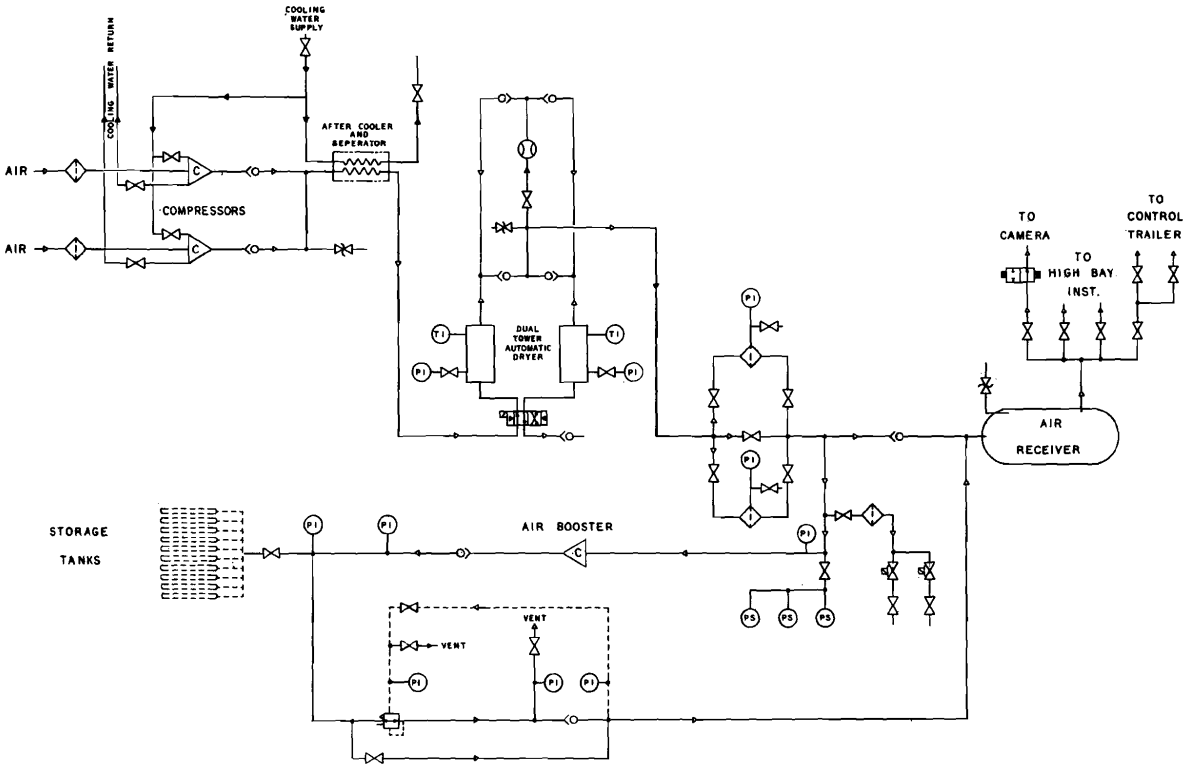

Figure 36. Instrument Air Supply System Schematic

8. ELECTRONIC LOOP CONTROL

Recent technological developments have made possible the use of fully solid-state electronic (excepting valve operators) control systems for chamber refrigeration loop control. The system will have several advantages over existing pneumatic systems, i.e., (1) lower initial expense, (2) all loop adjustments in the control room, (3) electronic reliability, and (4) loop control capability from room temperature to liquid hydrogen temperature. Loop temperature sensors will be thermistors (cold), and platinum resistors or thermistors on cool-down, avoiding the inherent vapor-pressure-bulb leakage problems.

The absolute accuracy of chamber temperature (cascade) control can be maintained by preserving the chamber vapor-pressure bulbs. In this case, a pneumatic-to-electric transducer replaces a pneumatic transmitter. Output information would be converted, electric to pneumatic, to drive the pneumatic valve positioners required by the magnetic environment.

The set point and controlled variable information will be computer-compatible. A computer mode will be added to the usual manual, automatic, and cascade modes.

9. MAGNETIC ENVIRONMENT

The stray magnetic field of the 25-foot chamber (38-kG central field) is approximately 10 kG immediately outside the vacuum tank at the camera platform level. This is greater by about a factor of two than that of the 7-foot chamber. The near chamber magnetic environment is of greatest concern to the instruments and controls that, necessarily, must be located close to the chamber, i.e., pneumatic-to-electric, motion, and pressure transducers, cameras, valve operators, etc.

The 7-foot solution to these problems[7] will, in most instances, have sufficient margin to accommodate the increase in magnitude of the field. Alternates have been developed in those cases in which the extrapolation is uncertain.

The extent of the problems solved for the 7-foot case can be made clear with an extreme example. If the 80-inch chamber suddenly found itself with a 25-foot chamber stray field, it would be in complete

darkness (the lamps would extinguish), all communications (video and audio) to the chamber area would be inoperative, all hi-bay motors would stall and burn up (the main vacuum spoils), all ion gages would indicate high vacuum, and the camera arc lamps, when pulsed, would leap from their mounts or shatter.

10. COMPUTER CONTROL

The experience at the BNL 80-inch chamber and the ANL 12-foot chamber suggests it is difficult, if not impossible, to make a successful installation of a computer in a new bubble chamber installation. Here, "successful" is defined as yielding significant useful output data at the time of the first cool-down.

The 25-foot chamber control room will provide space for a computer and interface of sufficient capability to allow logging, cool-down/warm-up assistance, and a reasonable level of process control, but will not include a computer initially. Particular care will be taken to see that all potential logging information and the set points of potential computer-controlled processes are computer-compatible as installed.

11. ACCELERATOR INTERFACE

The communications and control lines required to interface the bubble chamber with the accelerator are:

(1) Fire alarm - 5 zones cover the bubble chamber complex; these lines tie-in to NAL's Fire Department network.

(2) Bell telephones - 5 trunks: one 4-button phone with hold, and one control-room-only phone.

(3) Direct-line phone connections - 3 direct telephone lines: main control, target deck, and beam control.

(4) Bubble chamber public address system - 3 pair of lines: 2 for remote monitoring the bubble chamber page, usually main control and beams; 1 for audio-monitoring accelerator page at the bubble chamber.

(5) Accelerator status board - 50 pair of lines carry injection, magnet-on, targeting information to the bubble chamber display panel. If the information is multiplexed, we will accommodate the accelerator time code.

(6) Timing pulses - 3 lines, 50 Ω coax., injection time, beam time, and one spare.

(7) Beam counter information - 20 lines, 50 Ω coax. (one coax. if video multiplexed).

(8) Picture number - output-to-beams control, 20 wires.

References

1. 25-foot Cryogenic Bubble Chamber Proposal, March 1969. BNL 12400.

2. Specification for Fabrication of the Chamber Body, Vacuum Chamber, and Coil Dewar for the 7-foot Test Facility, BNL Spec. No. 3015, Rev. 2, October 1966.

3. Tests in the BNL 80-inch bubble chamber indicate that bubbles grow to 0.4 mm in 0.003 sec in a 50% neon-50% hydrogen mixture. This compares to 0.4 mm bubbles in hydrogen in 0.002 sec.

4. Stress Analysis of Plastic-Reinforced Fiberglas Piston for 7-foot Cryogenic Test Facility, by Brunswick Corporation, Marion, Virginia. Report No. BR885-123-002.

5. 14-foot Cryogenic Bubble Chamber Project Research and Development Program, The 7-foot Test Facility, October 1967. BNL 11810; The Superconducting Magnet System for the 12-foot Bubble Chamber, June 1968. ANL/HEP 6813.

6. Report on the Design Study of a Large Hydrogen Bubble Chamber for the CERN Proton Synchrotron, October 1966. TC/BEBC 66-73; 40-Inch Hydrogen Bubble Chamber Conversion to 70 kG Superconducting Magnet, Proposal III, June 1969. SLAC-106; Private Communication, M. Murpurgo, CERN, Geneva.

7. Magnetic Field Testing Program - Interim Summary Report, January 1967. BNL Note NN-06: GTM-6.

CONVENTIONAL FACILITIES

C. CONVENTIONAL FACILITIES

10. Planning Considerations

At the time this design study was proposed, it was agreed that the conventional facilities portion of the 25-foot cryogenic bubble chamber would be left in the proposal stage until the start of the Title II design of the rest of the components. However, by the time the design study was started, the National Accelerator Laboratory had established a beam line showing the approximate location of the bubble chamber[1] and asked that a compatible site plan including road and utility interfaces be developed. Following criteria development based on experience with the 7-foot test facility, sketches were prepared showing the site plan, the location and size of the individual shelters, and plan and elevation views of the bubble chamber building. As the design study continued, this plan was updated to meet the Title I design progress of each of the special systems. Building and structure types were defined based on housing the specific equipment for each special system. Further refinements were incorporated to accommodate a beam elevation of 738 feet and various interfaces and easements for the potential expansion of the accelerator complex.

This section covers the recommendations for the site plan, buildings, and utilities based on the requirements of the 25-foot cryogenic bubble chamber and its associated special systems.

11. Site Plan

1. GENERAL

The site of the bubble chamber complex is a land area of approximately two acres located about 600 feet north of Batavia Road on the center line of Beam 1 from the main accelerator. The central site location is shown in Fig. 3, page 16.

2. DESCRIPTION

The 2-foot natural relief over the site will be graded to a flat area with minimal drainage pitch. Existing wooded areas or trees will be preserved wherever possible. 25,000 sq ft of the area are covered with 8-inch-deep gravel fill, and 5,000 sq ft are covered with bituminous concrete. 800 linear feet of 20-foot-wide heavy-duty roads interconnect the paved areas and the interface roads. All interfaces such as roads, utilities, communications and accelerator systems will be at the bubble chamber site. The site is surrounded by an 8-foot-high chain link fence. The general site boundaries are shown in Fig. 37.

3. UTILITIES

The site contains the bubble chamber and all ancillary equipment and facilities for its operation and maintenance. The bubble chamber is positioned on the site so as to provide maximum flexibility in the use of the beam. The remainder of the equipment within the site consists of components of the subsystems that are required for operation of the bubble chamber. Minimum clearances around the bubble chamber are determined by the access requirements for maintenance purposes and by the magnitude of the stray magnetic field. Maximum distances between some of the components and the bubble chamber are determined by the energy losses or efficiency incurred. For instance, the magnet charging supply, vacuum pumps, and refrigerator must be mounted as close to the chamber as possible in order to minimize such losses. The storage dewars for cryogenic fluids are located near the refrigerators to minimize transfer losses. The distances between the remainder of the components and the bubble chamber are not as critical as those already mentioned. Portable crane usage is on a shared basis with the main accelerator. The general arrangement of the bubble chamber and its components on the site is shown in Fig. 38.

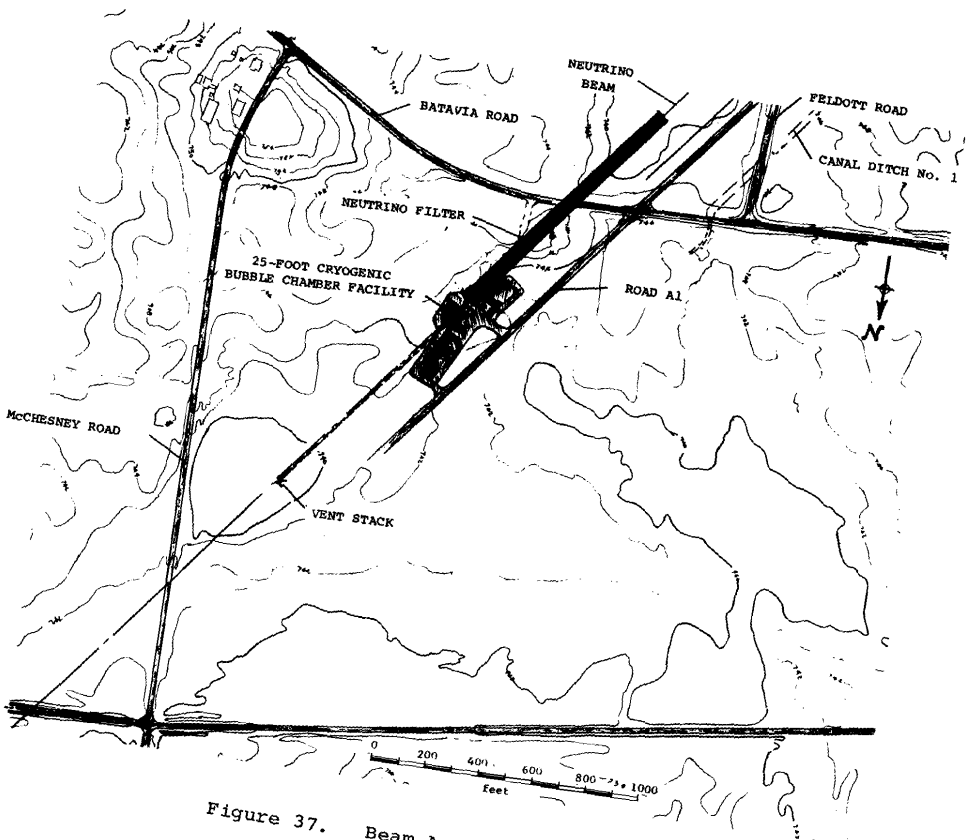

Figure 37. Beam Area Site Plan

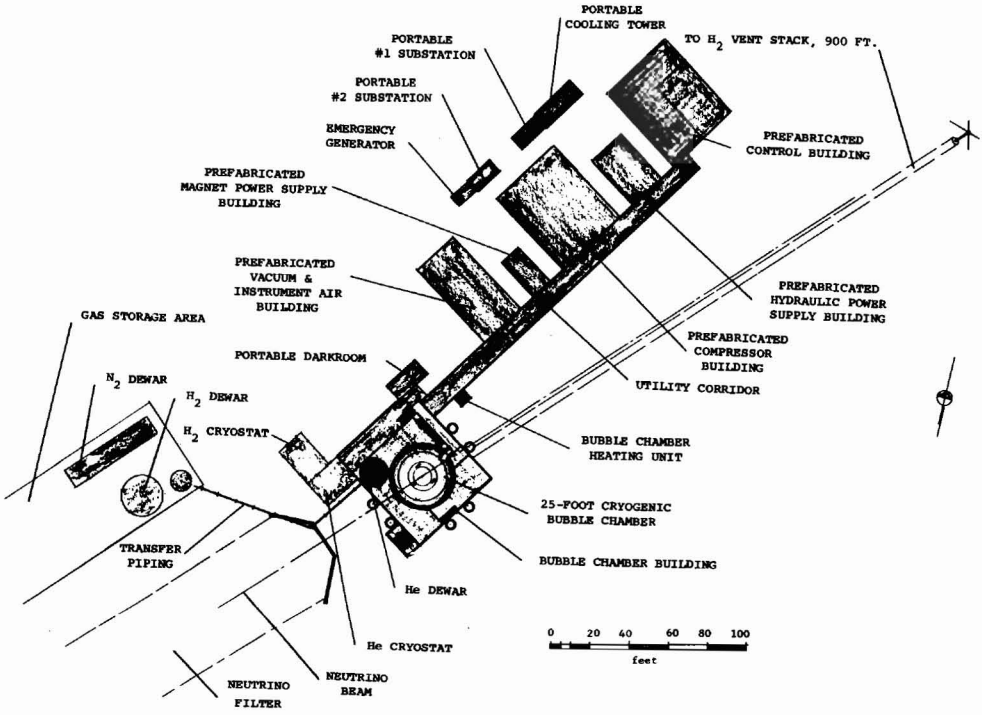

Figure 38. Bubble Chamber Area Site Plan

12. Buildings

1. GENERAL

The conventional physical plant[2,3] is replaced by a decentralized arrangement of the subsystems with their individual relocatable shelters matched to the particular subsystem and a covered utility corridor connecting all shelters. This concept utilizes minimum volume shelters resulting in greater simplicity, economy, expandability, and access to equipment. Safety is also improved due to the isolation of the subsystems. The bubble chamber complex is shown in Fig. 1, page 2.

2. DESCRIPTION AND UTILIZATION

The general requirements for the enclosures are shown in Table VII.

2.1. Bubble Chamber Building. The 25-foot cryogenic bubble chamber is positioned so that its vertical axis intersects the neutrino beam axis. It is oriented so that the beam window is located 10° counterclockwise from the incoming neutrino beam axis.

The building housing the bubble chamber proper consists of a 50-foot x 50-foot single-story structure, extending 20 feet above grade to the underside of the roof, as depicted on Figs. 39, 40, and 41.

Beam location, grade relationships, and bubble chamber assembly and operational requirements dictate a heavy reinforced concrete retaining wall type of substructure. The beam elevation, established at 738 feet, enters the bubble chamber at 5 feet below grade level and 7 feet below the level of the main floor. Wall height varies from a normal 27 feet below the main floor to 38 feet at the pit area. The L-shaped pit has been designed to accommodate entry of expansion systems and other chamber components through the roof area, and to provide adequate working space for assembly and maintenance of this equipment. The building volume above the main pit floor will house the helium dewar, ventilation ducts, and the complex array of chamber piping, power leads, and signal wiring.

Table VII. Enclosure Requirements

Enclosure	Type	Total Area (sq ft)	Room Height (ft)	Lighting (kVA)	Heating (kVA)	Ventilation (kVA)	Air Conditioning (kVA)	Total[1]	Remarks
Bubble Chamber Building	Custom	2,500	47 & 58	7.5	5.0	2.3[2]	-	14.8[2]	Oil Fired Hot Air Heating; Class I, Group B, Division 2
Control Building	Prefab.	2,000	10	6.0	40.0	-	14.0	60.0	
Compressor Building	Prefab.	2,000	15	6.0	60.0	18.5[2]	-	84.5[2]	Class I, Group B, Division 2 Area
Vacuum System and Instrument Air Building	Prefab.	1,250	10	3.8	25.0	1.1	-	29.9	
Hydraulic Power Supply Building	Prefab.	600	10	1.8	12.0	0.5	-	14.3	
Magnet Power Supply Building	Prefab.	300	10	0.9	6.0	0.3	-	7.2	
Darkroom	Portable	200	8	0.6	4.0	-	3.6	8.2	
Utility Corridor	Custom	1,880	10	5.7	37.5	1.7	-	44.9	
TOTALS		11,150		32.3	189.5	24.4	17.6	263.8	

(1) Connected load

(2) Not including emergency ventilation

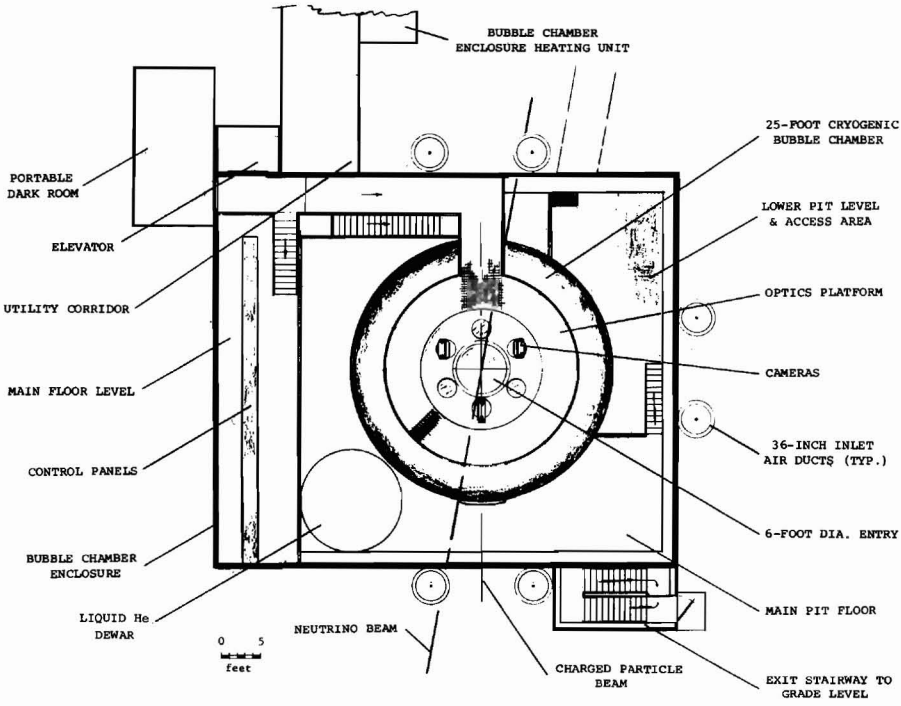

Figure 39. Bubble Chamber Building - Top View

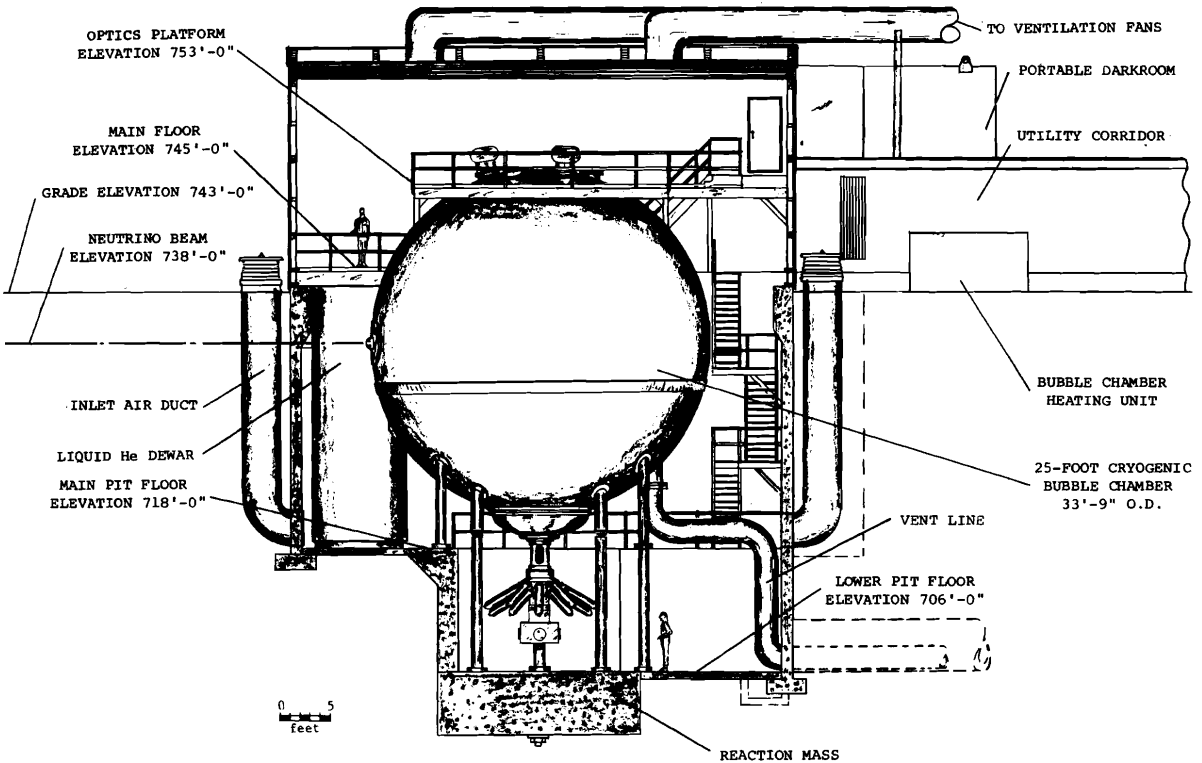

Figure 40. Cross Section of Bubble Chamber Building - Side View

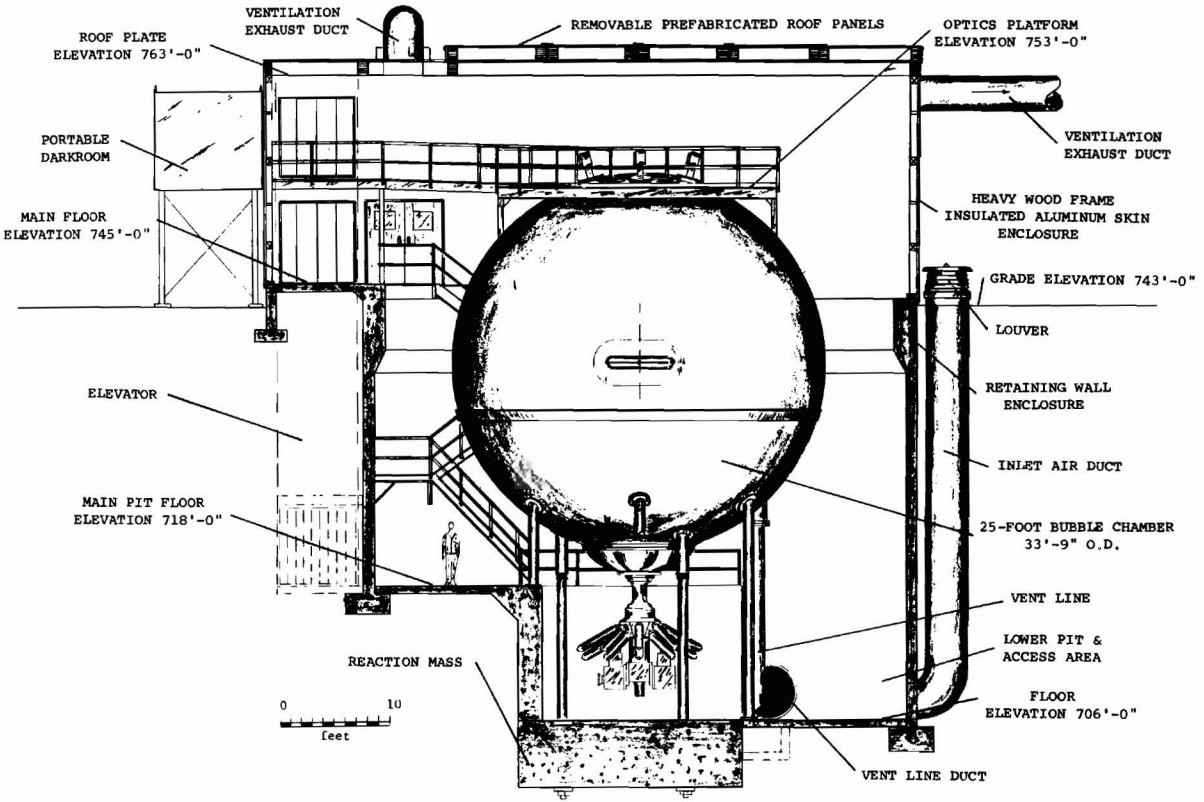

Figure 41. Cross Section of Bubble Chamber Building - Front View

The large reinforced concrete reaction mass required to absorb the energy from the chamber pulsations is isolated from the remainder of the floor structure and other footings. The chamber legs which support the hydrogen chamber and associated expansion equipment are secured directly to the reaction mass, whereas the six legs which support the superconducting coils and vacuum chamber are fastened to the floor foundations.

The structural frame of the bubble chamber building will be constructed of heavy timber and laminated beams, protected by flame-proof paint, and fastened together with aluminum and stainless steel hardware. Nonmagnetic material will be used throughout the building complex to eliminate distortions of the chamber magnetic field and to minimize the forces acting on the building structure and the magnet.

The major part of the roof area will be made removable to permit the complete assembly and disassembly of the bubble chamber. This is made possible by the use of five roof sections which can be lifted from the building structure as required. These sections will be constructed from laminated beams with plywood faces.

Roof deck will be type "A" or other noncombustible covering over rigid noncombustible insulation with weather seal applied accordingly.

The chamber building will be enclosed with aluminum sheeting with nonflammable insulation applied thereon.

Working access within various levels of the chamber building will be provided by a 5000-pound capacity, medium speed hydraulic elevator operating between the darkroom/optics level, the main floor level, and the main pit level.

Aluminum stairways will provide access between all levels. Another safety stairway, exterior to the building, will exit from the main pit floor to grade level outside the building.

A platform extending along one wall of the building will facilitate service to the camera platforms, the darkroom, and the

elevator. Aluminum guard rails will be installed around all platforms and walkways.

Access to exterior bubble chamber facilities will be provided via the utility corridor which connects with the building off the main floor level. Hydraulic and pneumatic control panels required for chamber operation are also located on the main floor level.

Emergency ventilation will be supplied by two large 50-hp fans located external to the building, but duct-connected at the roof as shown. Air will be drawn downward through the six louvered 36-inch-diameter pipes to the lower pit and the main pit and discharged at the roof level to provide a one-minute air change throughout the building. Fans and louvers can be operated by means of combustible gas detectors installed at strategic points of the building

The bubble chamber building is classified as a Class I, Group B, Division 2 area for all electrical equipment. Lighting will be 40 foot-candle vapor-tight instantaneous fluorescents at all operating levels. An outside grounding system will be provided. Unistrut-type structural wall inserts at 6-foot intervals will be vertically placed on all interior walls for installation of cable tray and process piping.

The building will be heated by a remotely located self-contained warm air heating system. Hot air will be ducted into the building and dispersed as required. This unit will be so controlled that the combustible gas detectors will shut off flame while keeping the duct fan running to help change the air in the bubble chamber building as required during emergency venting situations.

2.2. Control Building. The control building, housing a control room, two offices, two lavatories, and a small electronics laboratory in its 2000-sq-ft area, will be located 200 feet from the bubble chamber to minimize magnetic disturbance of the control room instrumentation. The prefabricated-type construction now in use at BNL and other national laboratories will be utilized. This consists of a standard structural steel frame enclosed with insulated galvanized steel siding

resting on reinforced concrete footings, foundations, and a 6-inch slab. Heat, ventilation, and control room air conditioning will be provided. All electrical equipment will be of general purpose design. An open-type grounding bus will be installed around the control room and tied to the building ground system. A large roll-up door to permit access to the small electronic laboratory area by a forklift will be provided. Double doors will be installed between the connecting service corridor and the control building to facilitate passage test equipment and bubble chamber components. The control room will have a removable floor consisting of 18-in. x 18-in. aluminum panels 24 in. above the sub-floor to provide runs for power and instrumentation cables. Fluorescent lighting above translucent ceiling panels will provide a light level of 50 foot-candles for the control room. The general arrangement of the control building is shown on Fig. 42.

The control building houses the 700-sq-ft control room, which serves as the operations and coordinating center of the 25-foot bubble chamber complex. When the bubble chamber is in operation, most of the activity takes place in the control room where bubble chamber operating parameters are monitored and control instrumentation is adjusted as required. The control room activities are discussed in the Instrumentation and Controls section, page 100.

This building also contains office space for supervisory personnel and lavatories for personnel working in the bubble chamber complex. The small electronic laboratory will provide the necessary construction, testing, maintenance, and calibration facilities for the various electronic and electromechanical equipment in the bubble chamber complex. Storage cabinets, work benches, and small laboratory equipment will be installed and receptables for 120-volt single-phase and 208-volt three-phase power are available.

2.3. Compressor Building. As depicted on Fig. 43, this building, with a floor area of 2000 sq ft and height of 15 ft, provides the enclosure for the compressors required for the facility's refrigeration and gas recovery systems. The process gases handled by these

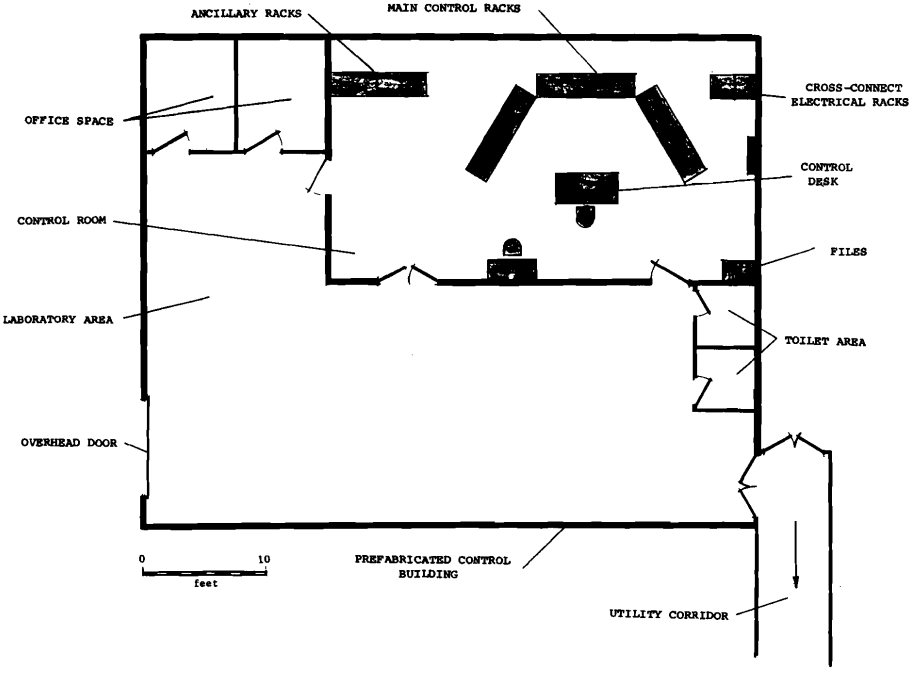

Figure 42. Control Building

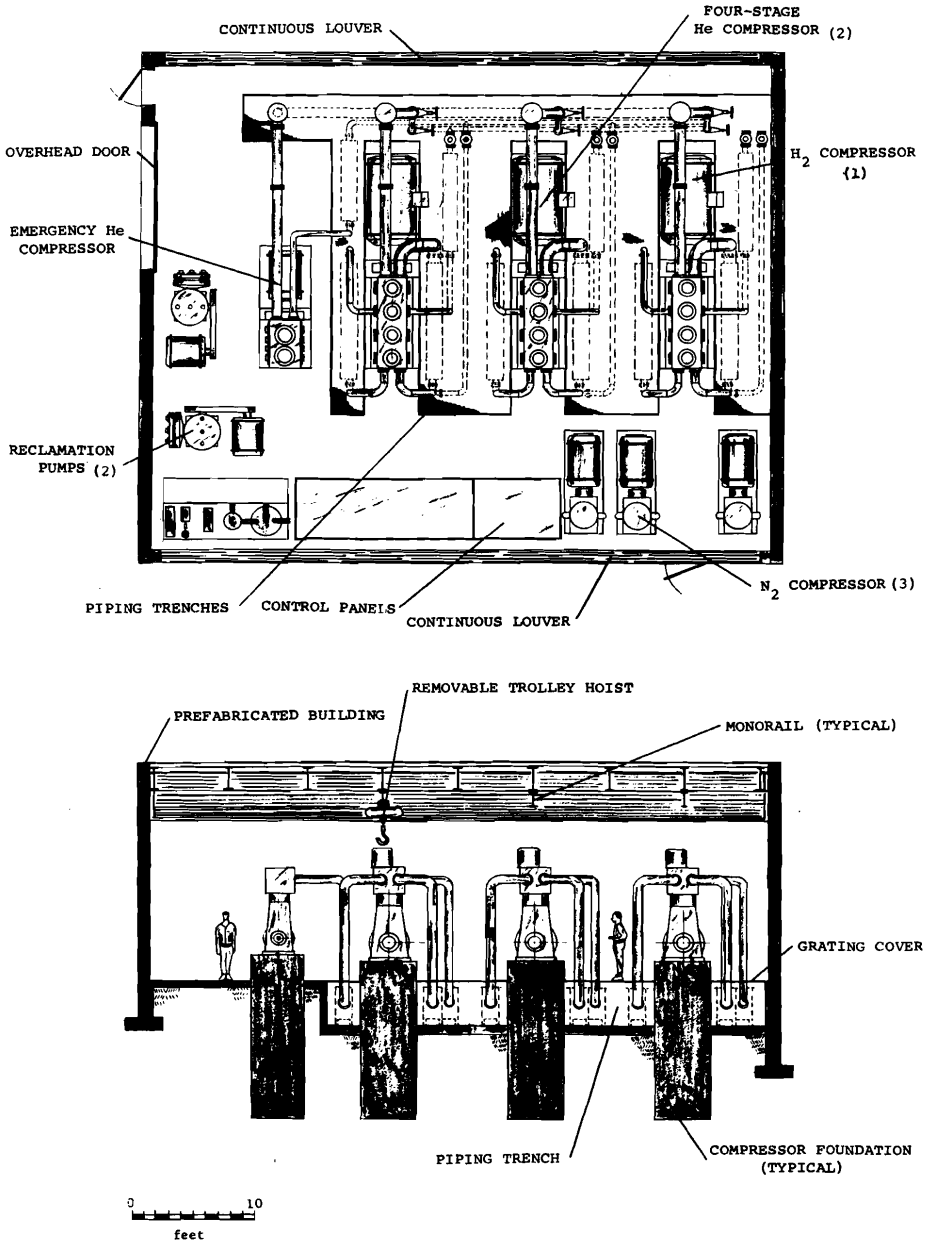

Figure 43. Compressor Building

compressors include flammable cryogens, and for this reason the entire enclosure is designed for such service. All electrical devices within the building conform to Class I, Group B, Division 2 requirements. Combustible gas detectors automatically actuate the emergency ventilation system providing a one-minute air change.

Re-enforced concrete foundations are provided for all compressors. Reaction masses are provided to offset the unbalanced forces generated in the large vertical hydrogen and helium compressors.

A crane system consisting of three monorails and a single hoist of 2-ton capacity is provided with sufficient clearance under the hook to facilitate compressor disassembly and repair. In order to minimize obstruction to crane movement and for easier access by personnel, the major interconnecting piping and wiring is located below floor level in trenches.

The walls and roof of the building are constructed of a steel frame covered with galvanized paneling. A 10-foot x 10-foot roll-up door provides clearance for the largest single piece of equipment which may have to pass in or out of the building.

Two doors, located at opposite ends of the compressor room, are equipped with panic hardware, providing alternate routes for personnel egress.

2.4. Vacuum and Instrument Air Building. This building, housing vacuum pumps, instrument air compressors, and associated receiver, is 25 feet x 45 feet x 10 feet high and is shown in Fig. 44. This structure will be constructed of prefabricated steel framing and galvanized steel siding and roofing. The walls will be lined with fire-resistant insulation. The floor will consist of a poured reinforced concrete slab, which will include foundations for equipment where required.

A light level of 40 foot-candles and thermostatically controlled electric heat are provided.

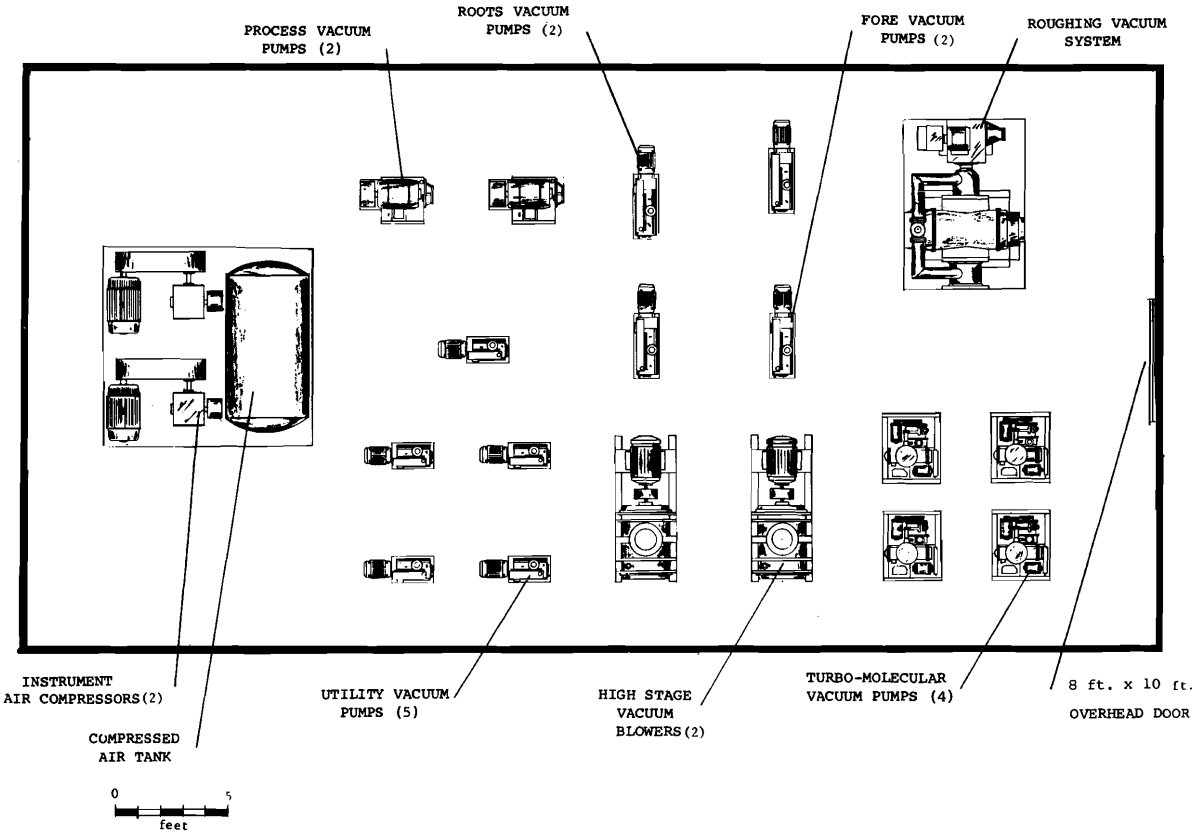

Figure 44. Vacuum and Instrument Air Building

2.5. Hydraulic Power Supply Building. This building required to house the hydraulic power supply for the expansion system is 20 feet x 30 feet x 10 feet high.

Similar to the other facility buildings outside of the magnetic field, this structure will be constructed of prefabricated steel framing and galvanized steel siding and roofing. The walls will be lined with fire-resistant insulation. The floor will consist of a poured reinforced concrete slab in which will be positioned suitable foundations for the various pieces of equipment.

The main pump used for the expansion system power supply will be of the variable displacement pressure compensated piston type with a discharge capacity of 550 gpm at 1500 psi. An auxiliary and stand-by hydraulic pump having a capacity of 40 gpm at 3000 psi is also provided.

Associated equipment housed in this building will include motor control panels for the 660-hp and 100-hp hydraulic pump motors, oil reservoirs, and cooling water service piping.

Due to the limited amount of personnel time required to attend to the equipment in this building, heating and lighting requirements are minimal. Heating will be accomplished by thermostatically controlled unit heaters.

2.6. Magnet Power Supply Building. This 300-sq-ft prefrabricated steel building will need a minimum of personnel activity. The building will be placed on a concrete slab. Minimal heating (50°F) and minimal lighting (40 foot-candles) is provided. This building is not insulated. A 7-foot x 9-foot overhead door is provided for easy access to the enclosed equipment. A 1-hp exhaust fan is mounted over the door to remove the heat dissipated in this building.

The power supply for the superconducting magnet and two chamber arc system power supplies will be located in this building. These skid-mounted power supplies are remotely controlled and monitored, and thus need little direct attention. Enough area is provided by the building so that routine maintenance can be performed on the equipment.

2.7. Darkroom. The darkroom facility will be an all-aluminum, self-contained, portable building approximately 10 feet x 20 feet in plan dimension. It includes its own air-conditioning and electric heating units. Due to its proximity to the stray magnetic field, all sinks, cabinets and other interior equipment will be made of stainless steel or other nonmagnetic material.

In bubble chamber experimentation, photographic film must be handled under total darkness or under safe light conditions and be stored in a controlled environmental area as well. Thus the darkroom functions as a safe film-handling facility while also providing a fast processing center for the required test strips of exposed film. These test strips are cut from the end of every exposed roll and are quickly processed for the experimenter's observation. The experimenter then determines whether changes in chamber operating parameters should be made. The exposed film is repackaged, labeled, and stored for later removal to the larger film-processing center.

Whereas long-term storage of film is provided by freezers, short-term storage prior to usage is provided in the darkroom so that the film can acclimate to the warmer temperatures in a controlled temperature and humidity atmosphere. A sufficient number of cabinets for film, processing supplies, and the special film-loading spools, and a work table for general maintenance and emergency repairs are available.

2.8. Utility Corridor. The 10-foot-wide by 10-foot-high utility corridor connects the bubble chamber building with the various other units of the bubble chamber complex. A typical cross section is shown in Fig. 45.

The corridor itself runs from a 2-foot above grade elevation to grade at the control room location. Foundations comprise a 6-inch reinforced concrete floor slab over compacted fill contained by poured reinforced concrete grade beams or foundation walls.

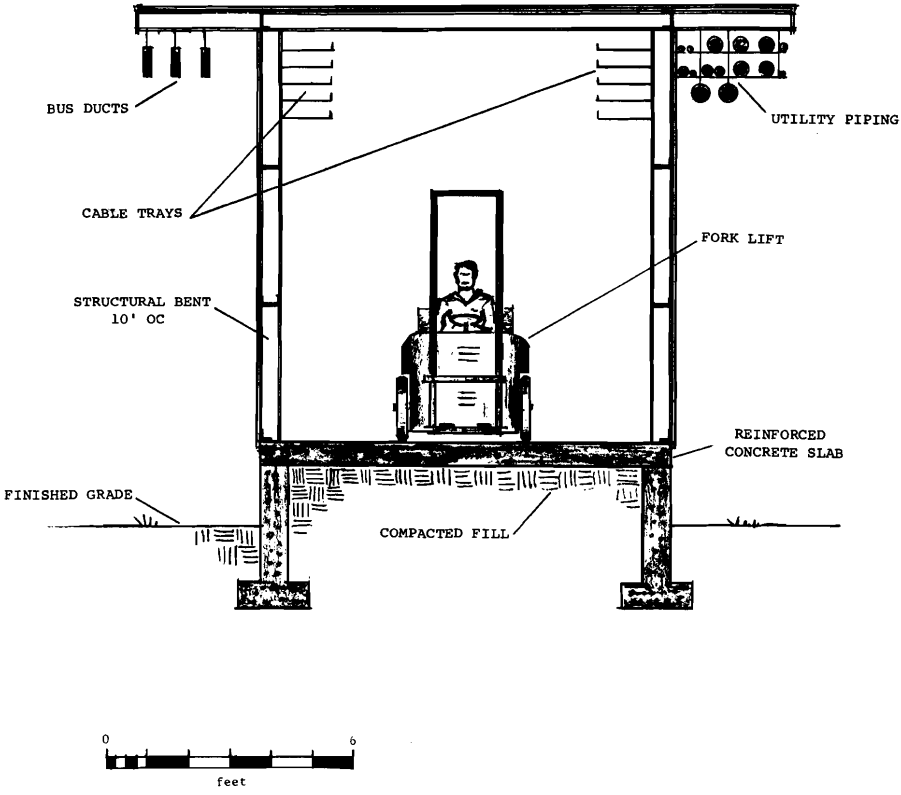

Figure 45. Cross Section of Connecting Corridor

The utility corridor structure comprises aluminum bents 10 feet on center for the first 40 feet from the bubble chamber building to prevent interference with the magnetic field. Steel bents 10 feet on center are used for the 140 feet thereafter to the control building.

A cantilevered roof structure is used for the utility corridor, providing protective cover for the utility piping on one side and the bus duct on the other.

Signal and control wiring will be carried in trays below the ceiling on each side of the corridor above access and exit doors.

The roof of the corridor will have a slight pitch to provide drainage. The entire structure will be aluminum and galvanized metal skin covered with applied flameproof insulation.

Incombustible plastic view panels and exit doors will be provided as required for safety and lighting requirements.

Structural requirements and door swings will be so arranged that a forklift truck may be driven down the utility corridor with safe clearances left on either side for pedestrian traffic.

A jog in the utility corridor at the control room building, as well as self-closing fire doors with a 2-1/2-hour rating at the bubble chamber building, and compressor building, provide safety and isolation.

Ventilation will be supplied by several small fans spaced to provide six changes of air per hour. Fans will run continuously.

The utility corridor will be standard classification for all electrical requirements. Lighting will be 40 foot-candle fluorescents. Structure will be grounded as required.

Heat will be provided by baseboard electric or electric unit heaters.

13. Utilities

1. GENERAL

The following utilities connections are required for the 25-foot bubble chamber:

Electrical power - 5.0 MVA at 13.8 kV

Domestic Water - 560 gpm at 60 psi

Other connections required for communication and control are tabulated and described in section B.9, page 100.

2. DESCRIPTION

2.1. Electrical. Reference is made to Fig. 46 which details the bubble chamber facility electrical system. A 13.8-kV electrical service supplying 5.0 MVA to the bubble chamber site shall be provided by the NAL facility. This service will be buried 36 in. below grade in transite conduit terminating in precast concrete manholes at the site substations. Two portable substations will be provided, one with a rating of 2500/3125 kVA and the other rated at 2000/2500 kVA. The substation transformers will be oil filled, outdoor type, 3 phase, and dual rated. The 480-volt secondary switchgear will be connected by bus duct to the motor control centers located at the site. Where possible, the motor control centers will be close to the substations and to their respective loads thus reducing costly duct and cable runs. The motor starters will generally be for full voltage starting except for motors rated 100 hp and above which will be for reduced voltage starting. Motor starters will be a combination of a disconnecting switch with current limiting fuses and a magnetic starter. Distribution panels will provide power for other uses such as lighting. To promote flexibility and ease of installation, aluminum bus duct will be used. In a laboratory environment where changes may occur or movement of buildings and large equipment may be necessary, bus duct has proven to be very efficient for quick disconnection or circuit changes. The electrical power requirements are shown in Table VIII.

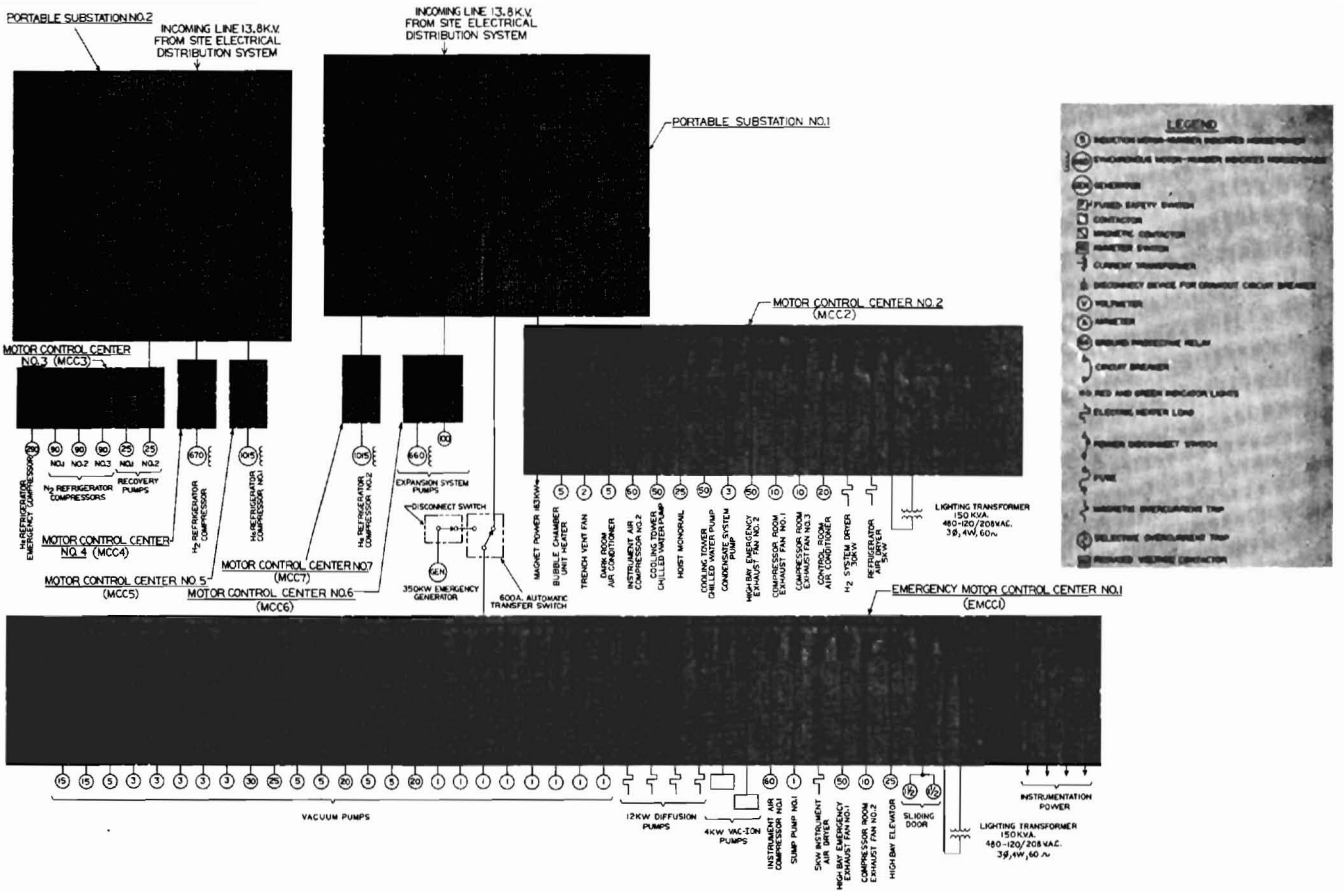

Figure 46. Electrical One-Line Diagram

Table VIII. Electrical Power Requirements

Item	Size (hp)	Type	Use	Load (kVA)
Motors(2)	1015	Synchronous	He refrigerator	1680
Motor	670	Sychronous	H_2 refrigerator	555
Motor	660	Sychronous	Expansion system	550
Motor	290	Sychronous	He emergency refrigerator	240
Motor	100	Induction	Expansion system	104
Motors(3)	90	Induction	N_2 refrigerator	279
Motors(2)	60	Induction	Instrument air	124
Motors(2)	50	Induction	Emergency exhaust fan	104
Motors(2)	50	Induction	Water cooling system	104
Motors(2)	25	Induction	Reclamation system	52
Motor	25	Induction	Building crane	26
Motor	25	Induction	Elevator	26
Motors	Various	Induction	Main vacuum	62
Motors	Various	Induction	Auxiliary vacuum	47
Motors	Various	Induction	Roughing vacuum	57
Motors	Various	Induction	Process vacuum	31
Charging supply			Magnet	163
Oil diffusion pumps			vacuum system	48
Dryers			Refrigerators	30
Dryers			Instrument air	5
Vacuum pump			Window	17
Control room			Instrumentation	60
Buildings			Heat, light, ventilation, A/C	264
Lighting			Yard	15
			Total Load (kVA)	4643

A 350-kW diesel generating unit will provide 480-volt, 3-phase emergency power for selected bubble chamber circuits. The engine-generator unit will be housed on a concrete pad with hospital-type silencers, a 1500-gallon fuel tank, and a transfer switch included. Automatic switching will be available upon electrical power interruption with a predetermined delay so that momentary interruption will not switch-in the generator.

Site grounding will be provided by 800 feet of service cable among the various facilities and with twenty-five ground rods appropriately spaced about the grounding grid. Grounding rods will be sunk to a sufficient depth below groundwater level to meet code requirements. Lightning protection will also be provided about the cryogenic and gas storage areas by means of eight 70-foot towers.

Ten 400-watt lamp fixtures placed on 30-foot-high aluminum poles provide the site lighting. Also, fifteen area floodlights will be placed at specific locations about the site.

2.2. Mechanical. The cooling water system is designed to absorb 7,350,000 Btu/hr of heat. The system consists of two portable units that each contain an evaporative cooler, circulating pumps and motors, control valves, and piping. The units are self-contained skid-mounted and designed for outdoor use. The system is put into operation by positioning the towers and then connecting the cooling water and make-up lines, and the power lines. The cooling water requirements are shown in Table IX.

The evaporative cooler is an enclosed unit containing a coil through which the water to be cooled is circulated. A small spray pump, integral with the cooler, pumps water from a separate water system and sprays it down over the coil. At the same time, several centrifugal fans blow air up over the coil and out of the top of the unit. Cooling effect is obtained through the evaporation of the spray water.

Table IX. Cooling Water Requirements, gpm

Location	Unit	No. Units	Motor hp/ Unit	gpm/ Unit	Total gpm*
Compressor Bldg.	He Compressor	2	1100	280	560
Compressor Bldg.	H_2 Compressor	1	800	200	200
Compressor Bldg.	N_2 Compressor	3	90	23	69
Compressor Bldg.	He Compressor (emergency)	1	110	28	-
Compressor Bldg.	Reclaiming Pump	2	15	1.5	3
Dewar Area	Cryogenic Pump	1	20	2	2
Hydraulic Bldg.	Small Pump	1	100	18	18
Hydraulic Bldg.	Large Pump	1	600	100	100
Vacuum & Air Bldg.	Process Vacuum Pump	2	15	1.5	3
Vacuum & Air Bldg.	Roughing, Blower	1	30	3.0	3
Vacuum & Air Bldg.	Roughing, Fore	1	25	2.5	3
Vacuum & Air Bldg.	Diffusion Pump	4	16	1.6	6
Vacuum & Air Bldg.	Instrument Air Compressor	2	60	6.0	12
Vacuum & Air Bldg.	Miscellaneous Small Pumps	-	7	0.7	1
		Total			980

Note: 980 gpm represents 7,350,000 BTU/hr (2.16 MW) of cooling water capacity required. Estimate based upon transferring 75% of electrical energy input for He, H_2, and N_2 compressors and 30% for other equipment into cooling water.

* gpm of cooling water based upon differential temperature of $15^{\circ}F$.

Two 50-hp circulating pumps and motors circulate 980 gpm of cooling water in a closed system through the evaporative cooler where it is cooled 15°F, to the equipment requiring cooling, and then back to the cooler.

Pressure within the closed system is regulated by the control valve.

2.3. Civil. Bubble chamber utilities will be picked up from utility band at Batavia Road 600 ft away to run underground to nearest need-point required.

Domestic Water. The domestic water system 560 gpm (40 gpm for cooling tower make-up and for the fire main) will be available at the bubble chamber complex. The system will loop the area as required. Water lines will be twin asbestos cement pressure pipe, 6 inches in diameter. Valves and hydrants will be provided as required.

Sanitary Sewer. A sanitary system will be provided for the bubble chamber area along the west side of complex. Sewer main will be a combination of 8-inch vitreous tile pipe for gravity flow from the control room area to the bubble chamber building manhole pumping station, thence via 6-inch asbestos cement pressure pipe to the NAL site system.

Waste in the bubble chamber building will be picked up by an air ejector pump from the building pit and ejected into the adjacent pumping station.

Sewer manholes of precast concrete will be constructed as required.

Storm Drainage. Bubble chamber complex will be adequately drained for run-off.

Run-off will be collected in local ditches and piping and channeled into a paved ditch draining toward the north low areas, thence through existing culverts at McChesney Road junction into lower levels for return to ground water.

Flat terrain surrounding the bubble chamber complex requires detailed consideration of run-off system versus leaching basin.

References

1. National Accelerator Laboratory Design Report. Second printing, July 1968.

2. 14-foot Cryogenic Bubble Chamber Project Title I Report. December 1, 1966. BNL 10700.

3. Proposal for the Construction of a 12-foot Hydrogen Bubble Chamber, June 10, 1964, Argonne National Laboratory.

SAFETY CONSIDERATIONS

D. SAFETY CONSIDERATIONS

1. Introduction

Safety considerations constitute an important aspect in the initial design of the 25-foot cryogenic bubble chamber facility, during detailed design when such concepts are more clearly defined, and during construction when quality of workmanship and adherence to specifications are verified and tested. An operational safety analysis, including various failure modes and their consequences, is made for all components of the facility as soon as the designs are sufficiently advanced to allow for such a detailed analysis. Such studies aim to minimize hazards to personnel and equipment in case of a possible malfunction. Documented safety reports are prepared and reviewed at various stages of chamber design. A formal safety analysis report is prepared upon completion of design for review by appointed review agencies.

2. Safety Organization

2.1. General

Safety aspects are studied, considered, and documented in detail by the physicists and engineers who are responsible for the design. These people have been associated with the Brookhaven National Laboratory 20-inch, 30-inch, 31-inch, 80-inch, and 7-foot bubble chambers. Besides the experience of designing and constructing these chambers, they have many years of chamber operating experience. Individual knowledge and competency has been increased further by participation of some personnel in advisory services to other organizations, including equipment-design reviews and work towards establishing guidelines for improving safety in the Nation's high energy physics research program.

2.2. Review by Outside Committees and Safety Documentation

The policy has been to have cryogenic chamber designs reviewed at various stages by groups of people not directly associated with the project. Such reviews have been undertaken by Brookhaven safety personnel, such as the BNL Safety Office, the Cryogenic Safety Committee, the Special Hazards Engineer, and the Atomic Energy Commission office representing the prime contractor. In the case of the 14-foot cryogenic bubble

chamber preliminary design, an outside review committee was organized which consisted of a group of internationally recognized experts in the field. This group independently reviewed the proposed designs and prepared a report listing its findings with recommendations for further study.[1] For the 7-foot chamber, a detailed formal safety report was issued upon completion of the design.[2] Meanwhile, the format and review of such a safety report has been formalized and adopted as a prerequisite to operation.[3] It is expected that a similar procedure will be followed for the 25-foot chamber safety analysis and reviews. Recommendations from the 14-foot External Safety Committee or resulting from the 7-foot Safety Review will be included in the 25-foot chamber design, where applicable.

2.3. Group Safety Committee

The Brookhaven Bubble Chamber Group has a safety committee comprised of physicists and engineers within the group. This committee works closely with the designers during all phases of design and construction. The aim is to promote safety by early identification of possible hazards with immediate recommendations for design improvements.

2.4. Adherence to Accepted Codes

Where applicable, components of this facility comply with accepted codes, including the following:

National Fire Protection Association
American Society of Mechanical Engineers
Instrument Society of America
Compressed Gas Association
American Standards Association
American Society for Testing Materials
National Electrical Code
Safety Guidelines for High Energy Accelerator Facilities
Lightning Protection Code

2.5. Quality Assurance Program

Where applicable, features of the Quality Assurance Program for reactor design and operation[4] will be adopted for the design, fabrication, and operation of the 25-foot chamber facility. The aim of this program is to achieve maximum reliability and safety for the facility commensurate to the costs and hazards involved. Documentation of quality control, compliance to specifications and required tests, and designation of responsibilities, are an important phase of the Quality Assurance Program.

2.6. Emergency and Operational Procedures

Emergency and operational procedures are written in detail when the designs are complete. These include actions to be taken to fit the type and degree of emergency, ranging from corrective actions of limited scope to complete halt of operations and evacuation of personnel. The operating personnel for the chamber will be familiarized with these procedures by means of a training course.

3. Buildings and Facilities

3.1. Integrity of the Buildings

The design criteria for the buildings are based on their function as well as weather conditions for the locality. In order to prevent overpressures in the bubble chamber building, its roof is designed to relieve at low pressure. This affords protection to personnel and the equipment. Roof panels are of low mass to minimize hazards of possible projectiles.

3.2. Isolation of Components

Areas which contain flammable cryogens and gases are separated from normally occupied spaces. Isolation of components is widely recognized as a major safety requirement, provided to prevent interactions between hazardous modules. Location of cryogenic storage vessels is consistent with accepted code requirements. Remoting of the control room insures the availability of a safe area during emergency conditions.

Instrumentation readout, process control functions, and emergency operations are remoted to this area so that the operator can identify the hazard and take corrective action immediately. The control room serves as the central communications center allowing audio as well as television contacts with personnel and equipment throughout the facility.

3.3. Classification of Areas in Accordance with National Electrical Code

All enclosed areas where flammable gases or volatile liquids are present are classified as Class I, Group B, Division 2. Division 2 applies to this type of installation because the hazardous fluids are normally confined within closed systems or containers and released only in case of a component failure. Electrical components and their enclosures (where required) are consistent with the classification in these areas. A grounding system is provided and lightning protection is also connected to this system.

3.4. Provision for Egress

In all parts of the facility, emergency exits and doors are provided to allow for more than one means of exit to personnel, should one route be blocked. Emergency exits are identified and provided with a bar-type release.

3.5. Eliminating Hazardous Gas Mixtures

Enclosed spaces containing hazardous cryogens are equipped with sensors for detecting combustible gas mixtures. High-capacity automatic emergency ventilation systems are provided to expel such mixtures, thereby minimizing their potential hazards.

3.6. Emergency Power

Emergency power is provided for power-failure protection. Sufficient capacity is available to allow operation of vital components during power failures. These include lighting, communications, instrumentation and controls, emergency ventilation, instrument air compressors, vacuum pumps, supercritical helium circulating system, and gas analysis equipment.

4. Pressure Vessels

4.1. Cryogenic Chamber

The cryogenic chamber, described in section B.4, is designed to the ASME Unfired Pressure Vessel Code for a working pressure of 200 psi. The materials used for its fabrication are subjected to chemical analysis to assure compliance with required standards. The type of stainless steel material used for its fabrication has proven stable at cryogenic temperatures against martensitic transformation, assuring that the required tensile strength, endurance strength, and ductility is maintained for this vessel which is subject to dynamic loading. The vessel is radiographed at welded joints, and castings or forgings are fully radiographed. The vessel is tested at 1-1/2 times the design pressure at room temperature. An additional safety factor results from the increase of the material's strength at low temperature.

4.2. Vacuum Tank

The construction of the vacuum tank is described in section B.4. The primary function of this vessel is to provide an insulating vacuum for the cryogenic inner vessel. However, to provide additional safety to the facility, this vessel is also designed as a pressure vessel to serve as a safety container in case of failure of an internal component. All major welded joints are radiographed and the tank is subjected to vacuum and pressure tests. Windows in the camera ports are made of quartz to protect them against thermal shock failure. The vacuum tank is protected against overpressure by an automatic venting system.

4.3. Cryogenic Storage Vessels and Gas Storage Tanks

All dewars, vessels, storage tanks, and their associated piping are designed, built, inspected, installed, and tested in accordance with applicable codes. ASME certification for pressure vessels is obtained where applicable.

5. Vent and Dump Systems

Redundant emergency venting systems are provided for all process fluids. Gas venting and liquid dump valves are provided for all cryogenic fluids. Normal procedure is to transfer the chamber contents to a liquid storage dewar. In the unexpected case that this system is inoperative, emergency venting to atmosphere is used. The vent system is designed to prevent occurrence of pressures exceeding the design values for any system component, even for the case of total vacuum failure. The chamber contents can be transferred to the liquid storage vessel or can be vented to atmosphere in a period not exceeding 12 minutes. Any portion of the piping or vessels which may be valved off and could be subjected to overpressure on warm-up, has automatic pressure relief of sufficient capacity to prevent excessive pressure build-up.

6. Refrigeration, Expansion, and Vacuum Systems

These systems are dynamic systems with complex piping, pressure vessels, heat exchangers, compression and expansion equipment and control components. All piping and vessels are designed and tested in accordance with standard industrial practice and existing codes where applicable, with pressure relief protection included.

Wherever possible, equipment is selected and designed so that loss of one component will not result in shutdown of the entire system. Sufficient back-up equipment is available to enable operation to continue at a reduced level. This improves safety since sufficient capacity for stand-by operation remains available in case one component should fail.

The process hydrogen gas is continuously analyzed by a gas analysis system. This system automatically samples the process gas at various strategic points and analyzes oxygen and other impurities. Should the level of contamination become excessive for safe or efficient operation, alarms provide immediate notification. In order to keep contaminants to a minimum, room-temperature as well as low-temperature purification equipment is provided. The low-temperature

purifiers are of the dual type, so that one side can be in use while the other system is undergoing reactivation.

High-pumping capacity is provided for the vacuum pumping system for the vacuum chamber. Cryopumping of residual gases by cryogenic surfaces is not relied upon in order to avoid the hazard of solid oxygen accumulating on the cold surfaces. The entire magnet is surrounded by multiple-layer insulation thereby reducing cryopumping should a hydrogen leak occur inside the vacuum chamber. The multiple-layer insulation also continues to provide insulation in case of total vacuum failure so that the cryogenic liquid need not be dumped in case of momentary vacuum or power failure.

Commercial practice and applicable codes are adhered to in design and operation of the hydraulic expansion system with due regard to safety requirements for high-pressure piping. All piping is secured and connections are safety-wired to protect against failure from vibration or fatigue.

7. Optics

The detailed design for the optical system is discussed in section B.7. The use of smaller spherical windows here (similar to the 7-foot chamber design) makes it possible and practical to design windows with a larger safety factor than used in previous designs employing large flat windows. An additional safety feature here is that the chamber window, the shield window, and the vacuum chamber window are all made of quartz to protect against thermal shocks. Thus, should both inner windows break in succession (an extremely remote possibility) the outer vacuum window would be protected. Likewise, should the vacuum chamber window break (assuming mechanical damage from the outside), the two inner cold windows would be protected. The entire optical assembly is surrounded by a separate high-vacuum system. This system is redundant and has sufficient back-up so that the vacuum spaces are protected, even if a portion of the equipment fails. Automatic isolating valves are provided, so that a leak in any window cavity can be valved off and pumped separately without adversely affecting the rest of the system.

8. Magnet

The coil windings of the superconducting magnet are fabricated from hollow, stabilized superconductor. These superconducting windings are stabilized by bonding normal conductor to the superconductor. The size of the normal conductor is such, that, if sudden momentary magnetic flux redistributions occur in sections of the magnet conductor, the normal conductor can carry the full magnet current for the duration of the flux redistribution without the temperature of the superconductor rising above the critical temperature of the superconductor. The heat capacity of the normal conductor with the internal helium coolant flow is sufficient to quench possible "hot" spots thus formed before they can propagate. This insures that the magnet coils do not suddenly go normal.

The stabilized superconducting windings will also be designed and instrumented to prevent the magnet coils from going suddenly normal if the current is increased beyond that value which the superconductor can carry in the magnetic field. If the current is increased beyond the current-carrying capacity of the superconductor, the excess current will transfer to the normal conductor and a voltage will appear across the magnet. As soon as this voltage is detected, the current to the magnet will be reduced automatically through an external resistor or by reducing the applied voltage.

In case of power failure, enough liquid helium is stored in the external helium dewar to enable maintenance of the magnet refrigeration system until the magnet power can be "dumped" through the external resistors. Power to drive the supercritical helium circulating pump is provided by the emergency generator.

9. Future Safety Analysis Program

9.1. Procedure

A detailed analysis of potential hazards associated with the project will be performed at the following stages of the project:

Initial Design

At this point concepts have been sufficiently advanced to permit analysis of components. Individual structures, members, and vessels are reviewed for reliability, strength, and function. Possible hazards resulting from a malfunction can be analyzed at this stage.

Design Stage

At this point detailed design of the complex has been completed. Interactions between components can be evaluated. A detailed failure analysis is included in this phase of the safety review.

Pre-Operational Stage

Complete flow diagrams are available at this point, including interconnecting controls, piping and valving.

Completed operating procedures are available at this point. These are reviewed to assure completeness, proper sequence of operations, protection against operator error.

9.2. Safety Analysis for Initial Design

Potential hazards which will be analyzed are as follows:

1. External hazards
   a) Natural events, such as lightning, tornadoes, storms
   b) Actions of people or machinery outside the project
   c) Fires
2. Release of flammable cryogen
   a) Inside buildings
   b) Outside areas
3. Release of high-pressure oil into bubble chamber building

4. Failure of chamber vessel or piping causing cryogen spillage into vacuum tank

5. Loss of insulating vacuum
   a) Main vacuum
   b) Window vacuum
   c) Transfer-line vacuum
   d) Storage vessels insulating vacuum

6. Contamination of cryogens
   a) Nonflammable cryogen contamination (nitrogen, helium, neon)
   b) Flammable cryogen contamination (hydrogen, deuterium) Hydrogen-oxygen combustion in confined spaces

7. Loss of refrigeration
   a) Hydrogen refrigeration failure
   b) Helium refrigeration failure

8. Magnet Failure
   a) Conductor failure
   b) Loss of cooling for sections of the magnet or for the entire magnet

9. Loss of electrical power, instrument air, water supply

10. Failure of safety systems
    a) Combustible gas detectors
    b) Fire detectors
    c) Emergency ventilation system
    d) Emergency generator
    e) Alarms
    f) Emergency vent valves, controls, piping, or vessels
    g) Gas analysis equipment

11. "Worst-Case" failure analysis
    a) Probability of occurrence
    b) Possible injury to people
    c) Possible damage to facility

References

1. Brookhaven National Laboratory 14-foot Cryogenic Bubble Chamber Project Safety Review. External Review Committee. April 1968.

2. Safety Analysis Report for BNL 7-foot Bubble Chamber. January 1969.

3. BNL Safety Manual. Revised Draft. September 1969.

4. Quality-Assurance-Program Requirements. Atomic Energy Commission RDT F2-2T, June 1969.

CONSTRUCTION COST ESTIMATES & SCHEDULE

E. CONSTRUCTION COST ESTIMATES AND SCHEDULES

1. Methods of Cost Estimation

The cost estimates and schedules as given in this report are dependent on the assumptions used in planning the project. For instance, if the funding is stretched out over a longer period than taken here, the costs will increase due to escalation, etc. The design on which the cost estimate is based is described in this report and reflects changes and up-dating of the earlier proposal[1] that have taken place as the result of work at Brookhaven National Laboratory during the spring and summer of 1969. Substantial improvement in the accuracy of the estimates and in the identification of areas of greatest cost uncertainties has been attempted by using the engineering firm of William M. Brobeck & Associates, who worked with BNL in the cost and schedule area during the development of the design contained in this report. Their independent estimates were reviewed and interpreted by BNL, and the total cost of the bubble chamber was fixed at $15 million. This includes the chamber components and their design, assembly, and installation. Also, the conventional facilities that are required for housing the chamber complex are included as well as their engineering, design, and administration costs. The interface with the accelerator is well defined, and the services to be provided by the accelerator project have been detailed.

Escalation is included in each individual system, and $2.8 million of contingency allowance is provided, which is approximately 25% of bubble chamber components and engineering cost and approximately 15% of conventional facilities and engineering costs.

The $325,000 of Construction Planning and Design funds made available in March 1969 is included in the EDIA allowance as well as the $280,000 of additional CP & D or advanced design funds which are required during FY 1970, if the schedule is to be met.

2. Cost Summaries

It is interesting to summarize the cost estimates in different ways to observe the costs of various parts of the bubble chamber. Table X

summarizes the costs of each system of the chamber and the conventional facilities with EDIA and contingency included.

Table X. Construction Cost Estimate Summary By Function
(all amounts in thousands of dollars)

I.	Bubble Chamber	
	A. Chamber System	1100
	B. Expansion System	950
	C. Refrigeration System	3800
	D. Optics System	900
	E. Magnet System	5800
	F. Vacuum System	1100
	G. Instrumentation and Control System	550
	H. Conventional Facilities	800
	Subtotal	15,000
II.	Heavy Hydrogen (Deuterium)	4,600
III.	Incremental Cost of Shielding for Bubble Chamber Neutrino Beam	500

By way of contrast, Table XI summarizes costs by items, showing EDIA, assembly and installation, and contingency explicitly. It is a direct summary of the detailed cost estimate of Table XII.

3. Cost Estimate

Table XII gives the detailed breakdown of the construction cost estimate. This estimate was prepared during August 1969, and is identical to the Schedule 44 Construction Project Data sheets of August 11, 1969.

Table XI. Construction Cost Estimate Summary
(all amounts in thousands of dollars)

I. Construction Costs		
A. Technical Components		9,000
B. Conventional Facilities		600
	Subtotal	9,600
II. EDIA (Engineering, Design, Inspection, and Administration)		
A. Technical Components (~ 21%)		1,900
B. Conventional Facilities (~ 15%)		100
	Subtotal	2,000
III. Assembly and Installation		
A. Manpower for Technical Components		600
IV. Contingencies		
A. Technical Components (~ 25%)		2,700
B. Conventional Facilities (~ 15%)		100
	Subtotal	2,800
Total for Bubble Chamber Construction		15,000

Table XII. Construction Cost Estimate
(all amounts in thousands of dollars)

A. Technical Components		
1. Chamber System		700
a. Chamber Body	593	
b. Cryogenic Valves and Plumbing	72	
c. Cryogenic Seals	3	
d. Chamber Instrumentation	32	
2. Expansion System		600
a. Fiberglas-Plastic Piston	170	
b. Hydraulic Actuator c. Hydraulic Power Supply	420	
d. Transition Piece and Supports	10	
3. Refrigeration System		2,400
a. Hydrogen Refrigeration Equipment	890	
(1) Compressors (2) Cold Box	800	
(3) Transfer Lines	50	
(4) Gas Distribution and Process Piping	40	
b. Helium Refrigeration Equipment	920	
(1) Compressors (2) Cold Box	700	
(3) Transfer Lines	50	
(4) Liquid and Gas Storage	50	
(5) Supercritical Circulating System	90	
(6) Gas Distribution and Process Piping	30	

c.	Chamber Fill and Vent System	355	
(1)	Cryogenic Liquid Storage	100	
(2)	Gas and Liquid Transfer Equipment	25	
(3)	Purification Equipment	70	
(4)	Process Piping	20	
(5)	Emergency Vent Line	140	
(6)	Hydrogen Disposal System		
d.	Vacuum Pumping System	215	
(1)	Main Vacuum Pumping System	170	
(2)	Auxiliary Vacuum Pumping System	45	
e.	Liquid Nitrogen Equipment	20	
(1)	Transfer Lines	15	
(2)	Gas Distribution and Process Piping	5	
4.	Optics System		550
a.	Illumination	40	
b.	Optical Glassware	280	
c.	Optica Mounts	80	
d.	Cameras	100	
e.	Window Vacuum System	50	
5.	Magnet System		3,700
a.	Magnet Coil	3,190	
(1)	Stabilized Superconductor	2,820	
(2)	Stiffener Strip	195	
(3)	Clamps, Spacers, etc.	175	

	b. Support Structure and Hardware	440			
	(1) Bridge	250			
	(2) Support Structure	125			
	(3) Plumbing	35			
	(4) Assembly Fixtures	30			
	c. Magnet Power Supply and Associated Equipment	70			
	(1) Power Supply and Controls	30			
	(2) Electrical Connections and Leads	25			
	(3) Magnet Instrumentation	15			
6.	Vacuum System		700		
	a. Vacuum Tank and Support Structure	566			
	b. Multilayer Insulation and Shield	94			
	c. Platforms and Railings	10			
	d. Installation and Assembly Fixtures	30			
7.	Instrumentation and Controls		350		
	a. Interconnecting Cables and Tubing	130			
	b. Instrument Air System	20			
	c. Accelerator Interface, Timing, etc.	50			
	d. Test and Calibration Equipment	50			
	e. Control, Monitor, and Communications Equipment	100			
Subtotal Bubble Chamber Technical Components				9,000	
EDIA (approximately 20%)				1,710	
Bubble Chamber Components					10,710

B. Conventional Facilities				
1. Buildings		400		
a. Bubble Chamber Building (approx. 2,500 sq ft)	280			
b. Control Room (approx. 2,000 sq ft)	50			
c. Compressor Building (approx. 2,000 sq ft)	70			
2. Other Structures and Systems		200		
Subtotal Conventional Facilities			600	
EDIA (approximately 15%)			100	
Bubble Chamber Conventional Facilities				700
C. Installation and Assembly Manpower				600
TOTAL ESTIMATED CONSTRUCTION AND ENGINEERING COST				12,010
Contingencies				
Technical Components			2,700	
Conventional Facilities			100	
Total Contingency				2,800
Expanded Construction Planning and Design Funds (as of October 1, 1969)				190
TOTAL ESTIMATED PROJECT COSTS				15,000

4. Construction and Obligation Schedule

As stated in detail in the next section on Schedule, it is our intention to make the first experimental run with the 25-foot chamber in June 1973. The obligation schedule shown in Table XIII is the smallest obligation rate that would allow us to achieve our objective.

Table XIII. Construction Obligation

Fiscal Year	Obligations (thousands of dollars)
1969	325
1970	480
1971	7,400
1972	4,795
1973	2,000
	15,000

5. Schedule

The objective is to construct the bubble chamber so as to begin the research program as close to start-up of the accelerator as is possible. With FY 1971 financing, we believe the chamber will be able to make its first experimental run by June 1973, providing detailed design can begin by March 1970.

The schedule developed for the 25-foot bubble chamber project has been determined from work-package breakdowns of the individual systems. At this time, the project has been broken down into work packages of the second level with some systems broken down to the third level. The work-package listing for the project and the corresponding code numbers are shown in Table XIV. The code numbers have been carried through the system schedules and master schedule presented in this section. The project activities subsequent to completion of this design report are as follows:

Review of design report concepts,
7-foot test facility activities,
Research and development,
Title II, detailed design, and specifications,
Bid solicitation and purchasing activity,
Fabrication and delivery,
Inspection and/or acceptance,
Assembly of system components,

Table XIV. Level-1, Level-2, and Level-3 Work Packages

LEVEL-1		LEVEL-2		LEVEL-3	
Code No.	Item	Code No.	Item	Code No.	Item
100	Chambers System	1100	Chamber body		
		1200	Cryogenic valves and plumbing		
		1300	Cryogenic seals		
		1400	Vacuum tank and support structure		
		1500	Multilayer insulation and shield		
		1600	Platforms and railings		
		1700	Installation and assembly fixtures		
200	Expansion System	2100	Fiberglas-plastic piston		
		2200	Hydraulic actuator		
		2300	Hydraulic power supply		
		2400	Transition piece and supports		
300	Refrigeration System	3100	Hydrogen refrigeration equipment	3110	Compressors
				3120	Hydrogen cold box
				3130	Hydrogen transfer lines
				3140	Gas distribution and process piping
		3200	Helium refrigeration equipment	3210	Helium compressors
				3220	Helium cold box
				3230	Helium transfer lines
				3240	Helium liquid and gas storage
				3250	Supercritical helium circulating system
				3260	Gas distribution and process piping
		3300	Chamber fill and vent system	3310	Cryogenic liquid storage
				3320	Gas and liquid transfer equipment
				3330	Purification equipment
				3340	Process piping
				3350	Emergency vent line
				3360	Hydrogen disposal system
		3400	Vacuum pumping system	3410	Main vacuum pumping system
				3420	Auxiliary vacuum pumping system
		3500	Liquid nitrogen equipment	3510	Storage vessel
				3520	Transfer lines
				3530	Gas distribution, process piping, etc.

LEVEL-1		LEVEL-2		LEVEL-3	
Code No.	Item	Code No.	Item	Code No.	Item
400	Optics	4100	Illumination	4110	Scotchlite
				4120	Flash tubes and associated equipment
		4200	Optical glassware	4210	Lenses
				4220	Windows (all fused silica)
				4230	Coating
		4300	Optics mounts		
		4400	Cameras	4410	Film transports
				4420	Camera drives
				4430	Platens
				4440	Data boxes
				4450	Data box drives
		4500	Window vacuum system		
500	Magnet	5100	Magnet coil	5110	Stabilized superconductor
				5120	Stiffener strip
				5130	Clamps, spacers, etc.
				5140	Winding equipment
		5200	Support structure and hardware	5210	Bridge
				5220	Support structure
				5230	Plumbing
				5240	Assembly fixtures
600	Systems Instrumentation and Controls	6100	Chambers instrumentation		
		6200	Expansion system instrumentation and controls		
		6300	Hydrogen refrigeration instrumentation and controls		
		6400	Helium refrigeration instrumentation and controls		
		6500	Chamber fill and vent system instrumentation and controls		
		6600	Vacuum pumping system instrumentation		
		6700	Magnet power supply and associated equipment	6710	Power supply and controls
				6720	Electrical connections and leads
				6730	Instrumentation

LEVEL-1		LEVEL-2		LEVEL-3	
Code No.	Item	Code No.	Item	Code No.	Item
600 (contd.)	Systems Instrumentation and Controls	6800	Control room instrumentation and controls	6810	Interconnecting cables and tubing
				6820	Instrument air system
				6830	Accelerator interface, timing, etc.
				6840	Test and calibration equipment
				6850	Control, monitor, and communications equipment
				6860	General control room equipment
700	Systems Integration	7100	Systems interconnections		
		7200	Parts standardization	7210	Seals
				7220	Fittings
				7230	Nuts and bolts
		7300	Assembly operations		
		7400	Specification standardization		
		7500	PERT scheduling		
		7600	Operating manuals and records		
800	Site Enclosures and Facilities	8100	Improvements to land		
		8200	Buildings		
		8300	Other structures		
		8400	Utilities		

Installation of system in the facility,
System tests and evaluation,
Full facility preoperational test.

These activities are included in the summary bar chart for the project in Fig. 47.

The chronology of events which is consistent with the bar chart has been reviewed by W. M. Brobeck & Associates[2] and is given in Table XV. It is seen that the magnet conductor procurement represents the tightest schedule. Assuming the copper and superconductor are ordered the second quarter of FY 1971 and beneficial occupancy of the coil winding area comes in the third quarter, about three months is available for delivery of the first lengths of conductor. Four months are probably the minimum and five months the more likely lead-time to the delivery of the first lengths of superconductors. Tooling fabrication and installation should be accomplished within this period. Allowance of slightly more than one year for magnet fabrication then brings the magnet completion to coincidence with the completion of the vessels. However, installation and assembly of the chamber and vacuum vessels should also be complete at about this same time. Thus magnet assembly must be done outside the vacuum vessel, thereby leaving only final installation of the magnet into the vacuum vessel which should only require a short time. Chicago Bridge and Iron Company, in a preliminary estimate, used for completion of the vessels, 24-30 months after award of contract. This estimate is reduced to 21 months due to the elimination of certain long-lead items such as heavy ring forgings from the design. The necessity of starting conventional construction no earlier than October 1970 may result in some delay due to weather during excavation and concrete work; however, unless some other means of obtaining funds for this activity are found, no other alternative is available.

The overall project schedule line chart is shown in Fig. 47. This diagram shows the time scale of the various project activities with dependencies indicated by arrows. The research and development activities in support of the 25-foot chamber project are also indicated. Subsequent to the two-month review period of the Design Report, it is seen that the

25-foot Cryogenic Bubble Chamber

Table XV. Chronology of Events (Design Report, October 1969)

Events	Chronology
Submitted Proposal for Design and Advance Procurement	October 1968
Requested Title I CP & D Funds	December 1968
Began Partial Title I (CP & D)	March 1969
Submitted Schedule 44 Data Sheets	August 1969
Publish Design Report	October 1969
Request Additional CP & D Design Funds	2nd Quarter, FY 1970
Select A-E	3rd Quarter, FY 1970
Complete Title I Design and Review of Technical Components	3rd Quarter, FY 1970
Complete Title I Safety Review	3rd Quarter, FY 1970
Title II Design and Safety Review	Starts 3rd Quarter, FY 1970 Complete 3rd Quarter, FY 1971
Initiate Long-Lead Procurements (Start of Construction)	2nd Quarter, FY 1971
Conventional Construction	Starts 2nd Quarter, FY 1971 Complete 1st Quarter, FY 1972
Fabrication of Bubble Chamber Systems	Starts 2nd Quarter, FY 1971 Complete 4th Quarter, FY 1972
Beneficial Occupancy of Coil Winding Area	3rd Quarter, FY 1971
Process Heavy Water to Deuterium Liquid	Starts 4th Quarter, FY 1971 Complete 4th Quarter, FY 1973
Installation and Assembly	Starts 2nd Quarter, FY 1972 Complete 1st Quarter, FY 1973
Preoperational Testing	Starts 3rd Quarter, FY 1972 Complete 2nd Quarter, FY 1973
Training, Preparation of Operating Procedures and Operational Safety Review	Starts 3rd Quarter, FY 1972 Complete 2nd Quarter, FY 1973
Field Erection of Vessels Complete	1st Quarter, FY 1973
Chamber Ready for Experiments	4th Quarter, FY 1973

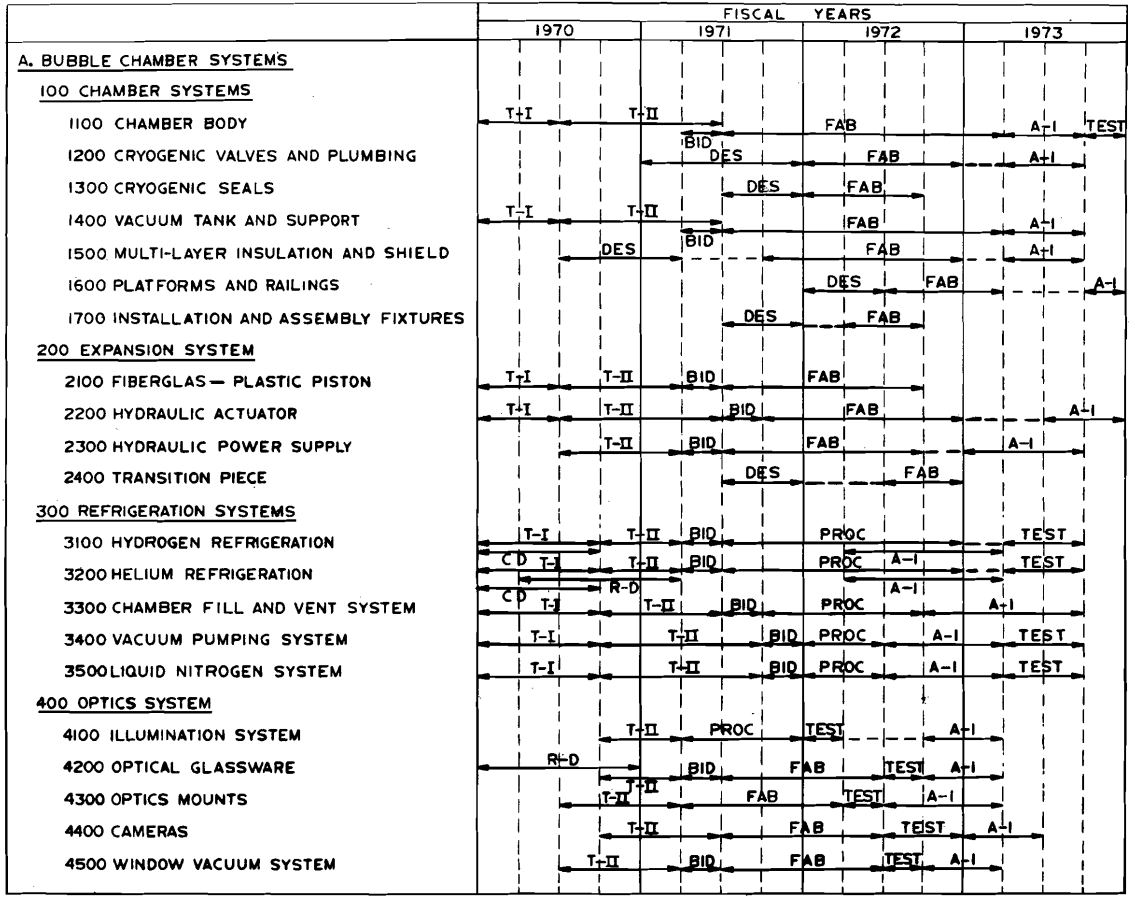
FISCAL YEARS
1970
1971
1972
1973
A. BUBBLE CHAMBER SYSTEMS
100 CHAMBER SYSTEMS
1100 CHAMBER BODY
1200 CRYOGENIC VALVES AND PLUMBING
1300 CRYOGENIC SEALS
1400 VACUUM TANK AND SUPPORT
1500 MULTI-LAYER INSULATION AND SHIELD
1600 PLATFORMS AND RAILINGS
1700 INSTALLATION AND ASSEMBLY FIXTURES
200 EXPANSION SYSTEM
2100 FIBERGLAS — PLASTIC PISTON
2200 HYDRAULIC ACTUATOR
2300 HYDRAULIC POWER SUPPLY
2400 TRANSITION PIECE
300 REFRIGERATION SYSTEMS
3100 HYDROGEN REFRIGERATION
3200 HELIUM REFRIGERATION
3300 CHAMBER FILL AND VENT SYSTEM
3400 VACUUM PUMPING SYSTEM
3500 LIQUID NITROGEN SYSTEM
400 OPTICS SYSTEM
4100 ILLUMINATION SYSTEM
4200 OPTICAL GLASSWARE
4300 OPTICS MOUNTS
4400 CAMERAS
4500 WINDOW VACUUM SYSTEM
T-I
T-II
BID
DES
FAB
A-I
TEST
PROC
R-D
CD

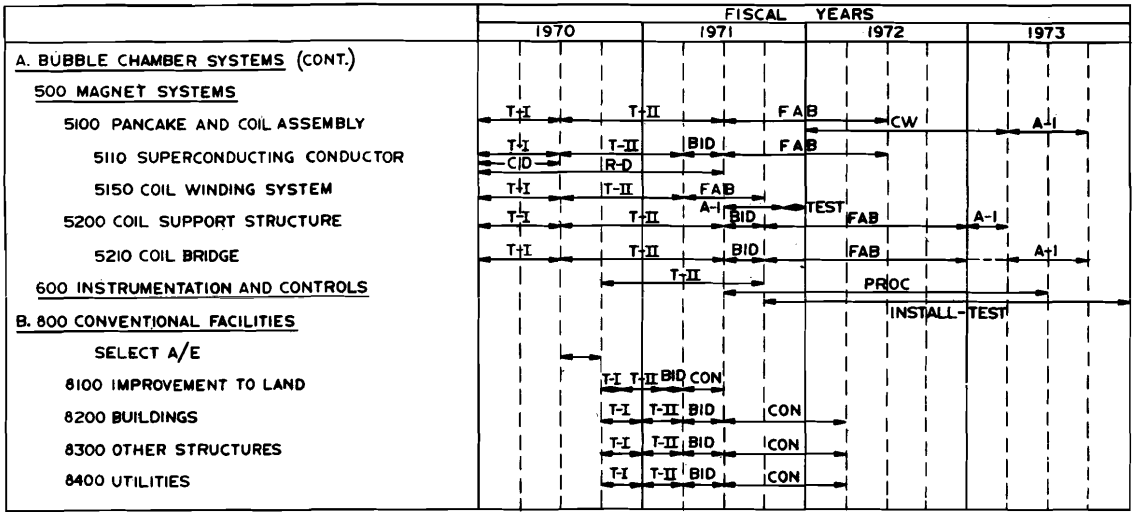

LEGEND

T-I = TITLE I

T-II = TITLE II

FAB = FABRICATION

A-I = ASSEMBLY AND INSTALLATION

CON = CONSTRUCTION

DES = DESIGN

PROC = PROCUREMENT

R-D = RESEARCH

C D = CRITERIA DEVELOPEMENT

C W = COIL WINDING

Figure 47. Construction Schedule

7-foot test facility activity continues to provide information for the completion of Title II design and for fabrication procedures for the chamber systems. In addition, a parallel research and development program for 25-foot design features which are different from the 7-foot designs will be carried out,especially in the optics and superconducting coil areas.

The critical path for the project is determined by the design, procurement, fabrication, assembly, and installation of the superconducting magnet coil as described above. The chamber is expected to be ready for initial cool-down and testing by March 1973. A three-month general test will be followed by the first runs for high energy physics research scheduled to start June 1973.

The project will be administered using the PERT/COST or similar technique of cost control to minimize overruns in cost and/or project duration.

References

1. 25-foot Cryogenic Bubble Chamber Proposal, March 1969. BNL 12400.

2. Cost Estimate for Construction of a Twenty-Five-Foot Liquid Hydrogen Superconducting Bubble Chamber, prepared by William M. Brobeck & Associates, Berkeley, Calif., August 1969. Report 187-1-R2.

ESTIMATES OF OPERATING PROGRAM

F. ESTIMATES OF OPERATING PROGRAM

The annual operating cost for the 25-foot chamber is based on a picture output of 3,000,000 stereo-triad pictures per year. The chamber will be operated on a 7-day-week, 24-hour-per-day basis, with occasional stand-by periods for minor maintenance and scheduled shutdown periods for modifications, additions, and improvements. Estimates of operating costs and costs for bubble chamber equipment and improvements are based on Brookhaven National Laboratory experience in operating bubble chamber facilities and review of bubble chamber programs at other laboratories. An estimated annual budget for FY 1974 is shown in Table XVI. These costs have been included in previous estimates of the overall operating cost of the 200-Bev accelerator laboratory.

Table XVI. Estimated Annual Budget in FY 1974
(all amounts in thousands of dollars)

Operating Costs				
Wage Expense (47 full-time equivalents)		750		
Supplies		240		
Major Procurements				
Film and Processing	500			
Power	170			
Gases (hydrogen, helium, nitrogen)	190	860		
Engineering and Shop Burden		150		
Total Operating Costs			2,000	
Other Costs				
Equipment		300		
Bubble Chamber Improvements		300		
Total Other Costs			600	
Total Annual Budget				2,600

Personnel estimates are based on permanent status only. A breakdown of personnel for FY 1969 through 1974 and showing the source of funds during that period is shown in Table XVII.

A summary of the total yearly budget, including allowances for R & D funds, is shown in Table XVIII.

1. Gases for Filling the Chamber

As has been mentioned, physics experimentation requires flexibility in the substances used to fill the chamber. Various possibilities exist. These include hydrogen, deuterium, neon, and mixtures of hydrogen and neon. Also, possibilities such as an inner track-sensitive target filled with deuterium used with an outer chamber filling of hydrogen and neon are thought to hold great promise for future experiments and, therefore, need to be included in the present considerations.

A plan has been developed for requesting the funds necessary for obtaining the gases that are needed for the chamber. First to be considered is hydrogen. In the case of BNL's 80-inch chamber, experimental operations began in September 1963, and over 3 million pictures were taken with hydrogen fillings before May 1966, when deuterium was first used. Since then a total of 4.6 million pictures have been taken of which about 1.2 million were with deuterium. On the other hand, to show the variation of program needs, the BNL 30-inch chamber was first operated with deuterium in September 1962, and since that time 3.4 million pictures have been taken with deuterium out of a total of 9.0 million pictures. Our best estimate for the 25-foot chamber is that the first operation will be with hydrogen, and this will continue for about one year prior to first deuterium operation. (Initial operation with hydrogen for a check-out period is required before committing the much more expensive deuterium to a new bubble chamber system.) Also, about one-half of the operation will be with hydrogen fillings. Using the latest cost for liquid hydrogen and allowing for a 10% contingency, $11,000 will purchase the liquid for one filling. This can be financed out of operating funds.

Table XVII. Estimated Bubble Chamber Staff by Fiscal Year and by Source of Funds

FY		Physicist	Professional	Technician	Other	Staff	Total Man/Years
1969	CP & D	2	11	6	2	21	7
1970	CP & D	2	11	7	2	22	24
	Advanced Design	3	11	10	2	26	
1971	Construction Project	3	11	20	2	36	36
1972	Construction Project	1	3	8	1	13	45
	Preoperating	2	8	21	1	32	
1973	Construction Project	1	2	5	1	9	48
	Operating	2	7	29	1	39	
1974	Operating	2	6	37	2	47	47

Table XVIII. Budget Summary
(all amounts in thousands of dollars)

	Fiscal Year						
	1969	1970	1971	1972	1973	1974	
Construction Project							
Obligations - Bubble Chamber	325	480	7,400	4,795	2,000		(total 15,000)
Obligations - Deuterium & Shielding for Beam			4,600	500			(total 5,100)
Costs	84	540	6,500	7,576	5,400		(total 20,100)
Preoperation Program							
Operating	160	160	160	700			
Equipment	20	40	80	240			
Operation Program							
Operating					1,000	2,000	
Equipment					500	300	
Post Project Construction						300	

Next, the estimate should allow for about one-half of the operation with deuterium beginning about one year after the first hydrogen runs. At projected costs, $4.6 million is required for a deuterium filling including contingency. Two procedures have been followed in the past for obtaining requisite deuterium:

1) Heavy water was purchased from the Atomic Energy Commission stockpile at Savannah River according to the following specification.

> "Heavy water, D_2O, for bubble chamber use, from Danna Plant stock, with an activity of 0.0003 microcuries per cm^3 or less due to tritium."

Operating funds were used for these procurements, and the heavy water was shipped to a commercial company for conversion and storage in high-pressure gas trailers. These trailers were then shipped to BNL and the gas has been used as needed. Soon ~ $500,000 worth of deuterium gas will be at BNL for use with any of the four cryogenic bubble chambers.

2) At the time of the Argonne National Laboratory 12-foot proposal, ~ $1 million was included in the Schedule 44 Construction Project Data Sheets for ~ 60,000 pounds of heavy water for use in the 12-foot chamber. Our understanding is that an analogy was drawn to heavy-water reactors where deuterium necessary for operation has usually been carried as part of the construction project.

For greatest cost efficiency, we propose that the AEC Research Division set up a bubble chamber deuterium gas pool from which deuterium is assigned consistent with program needs. This proposal seems appropriate since a smaller total pool of deuterium would be required than if each chamber in the United States carried its own stock of deuterium and since all large bubble chambers would still be allowed to be scheduled with only slight inconvenience. As new large volume chambers are constructed, the pool would require some additional inventory but not necessarily proportional to new chamber volumes. Make-up for losses would be operating expense. The size of the deuterium inventory in 1974 should be sufficient to operate simultaneously two out of the three large volume chambers which should exist at that time. This inventory would be made up as shown in Table XIX. Net cost to the U.S. Government would be minimized under

Table XIX. Deuterium Inventory

Deuterium on hand for BNL's 7-foot chamber	$ 500,000
Deuterium on hand for ANL's 12-foot chamber	1,000,000
FY 1972 line item for established pool	4,100,000
Total	$5,600,000

this plan. Sharing of expensive materials when program efficiency is not adversely affected is particularly justified, and therefore we strongly suggest that this procedure be followed.

Use of the 25-foot chamber with neon or neon-hydrogen mixtures, whether in the chamber proper or in a target-chamber configuration, is much more difficult to estimate than hydrogen and deuterium operation discussed above. The first neon-hydrogen run in the BNL 80-inch chamber was in March 1967 and the 360,000 pictures obtained then are still in analysis. The cost of neon was about $100 per liquid liter in 1965, dropped to $44 per liquid liter in 1967, and further decreased to $35 per liquid liter in 1969. Due to the great increase in use of liquid oxygen in the steel industry, high-tonnage air liquefaction plants are becoming more numerous and the basic cost of the processes is being substantially reduced. Our understanding is that neon separation loops can be added to these plants economically, and that this should result in reduced costs for neon in the future. A procedure for separating neon by simple condensing techniques from cheaper so-called "crude" neon-helium gas mixtures is also being investigated. The successful development of this procedure could yield substantial cost savings. Since the cost and the percentage usage are both in question, we propose that the neon-filling estimates should be re-evaluated at a later time when more meaningful data will be available. It seems therefore wise not to include these possible future costs at the present time.