NALREP

Monthly Report of the Fermi National Accelerator Laboratory September 1975

Fermi National Accelerator Laboratory

NALREP is published monthly by the Fermi National Accelerator Laboratory, P. O. Box 500, Batavia, Illinois 60510.

J. R. Sanford, Editor
N. Stiening, Assistant Editor

The presentation of material in NALREP is not intended to substitute for or preclude its publication in a professional journal, and reference to articles herein should not be cited in such journals.

Contributions and comments should be addressed to the Program Planning Office. Requests for copies should be addressed to the Publications Office.

FERMILAB-75-9 0090.01

THE COVER: A view of the console area of the 7th floor computer room in the Central Laboratory. Operator J. Shannon is shown at the console of the 131,000-word memory CDC 6600. The console for the recently acquired 65,000-word memory CDC 6600 is on the left. One operator works both consoles.

Operated by Universities Research Association Inc. under contract with the Energy Research and Development Administration

CONTENTS SEPTEMBER 1975

BISON-NET and the State of Computing at Fermilab 1

Notes and Announcements

Program Advisory Committee Meeting Scheduled. . . 13

Proposed Fermilab Workshop on BISON-NET. . . 13

Workshop on a Short-Lived Particle Beam Facility Planned. . . 14

Tele-Copier Service on Trial. . . 14

Facility Utilization Summary -- August 1975 17

Manuscripts and Articles Prepared During July and August 1975 23

Dates to Remember

BISON-NET AND THE STATE OF COMPUTING AT FERMILAB

The computing facilities available for the Fermilab experimenters have grown in a rather multi-dimensional manner along with the general growth of the Laboratory high energy physics research program. The overall approach in computing at Fermilab was first described in NALREP in December 1973. In that article, it was stated that "The Laboratory defines three major types of computing, exclusive of the systems involved in the control of the accelerator and beam lines, necessary for the high energy physics research program." These are:

--On-line computing, which is satisfied with an assigned mini-computer, which is interfaced to each experiment and intended for use only by that experimental group.

--Fast turn-around computing, to support experiments while data are being taken, with adequate computing power and fast enough response that the quality of the data may be assessed by quickly processing a small sample.

--Batch processing for the analysis of the major quantity of data acquired at Fermilab.

For the first need, the PDP-11 is used as the standard data acquisition on-line computer in a Fermilab configuration called BISON (Basic Instrument for the Support of On-line Needs). These computers are software-supported with a library of general purpose programs by the Fermilab Computing Department, part of the Research Division. Currently there are over 25 PDP-11's operational and approximately 10 additional computers, either PDP-15's or SIGMA 2/3's. Most of these are assigned to experimenters from the Laboratory computer pool, although a substantial number are brought to Fermilab from experimenters' home institutions.

For the fast turn-around computing, since late 1973 Fermilab has utilized a CDC 6600 with 131,000 words of memory. That computer, currently designated "machine A," became saturated at the beginning of 1975. A second CDC 6600 with 65,000 words of memory was acquired in June of this year to alleviate this condition. The second machine, designated "machine B," is now operating successfully in the computer room on the 7th floor, Central Laboratory.

At present the two machines are running independently; they will continue to do so through this November, at which time plans are to join them with an appropriately modified operating system and a shared storage file system. For all practical purposes, the two computers will then be interchangeable. The configuration will be such that any permanent records of data or programs available to one computer will also be available to the other. Also, in the event of a failure of one of the two systems, the remaining computer will continue to function without interruption. In addition to the obvious difference in memory size, there will be some slight differences in the configurations of the two machines. Although this may restrict some jobs only to one of them, by and large it is expected that most jobs would run equally well on either computer. A diagram of the configuration of the connected systems is shown on page 3.

This enhanced fast turn-around facility, if experimenters continue to use it with discretion, will manage to satisfy the major part of the need for this type of computing until about mid-1976. Certainly with two computers, the availability of at least one of them should be very close to 100%. This

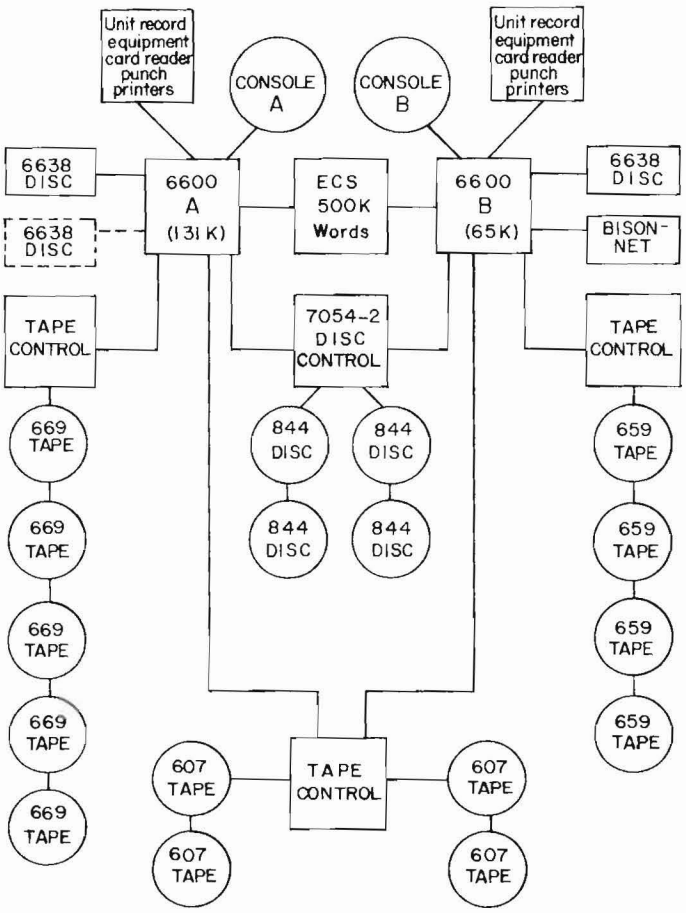

The overall scheme of the interconnection between the two Fermilab CDC 6600 computers and the distribution of the peripheral units is schematically shown above. This arrangement, with the shared extended core storage (ECS) and disk file system as shown, will be implemented by the end of November. At present the two computers are not interconnected.

should enormously enhance the readiness of the fast turn-around facility at the Laboratory. Unfortunately, due to continuing funding limitations, the amount of disk storage space has not grown to an adequate level, and experimenters will have to continue to severely restrict their utilization of permanent and temporary storage space.

In order to augment the Laboratory's capability for fast turn-around computing, a special broad-band network has been developed to allow the interconnection of computers on site. This network, BISON-NET, is primarily intended to connect the central computer facility to any other computer on site. Since most data-acquisition computers at Fermilab have CAMAC interfaces, the modules of this network interface have been implemented as CAMAC modules, in order to make the system as hardware independent as possible.

Each station of the network consists of a transmit/receive module (T/R) and two 1024-word, 24-bit buffer memories. One of these is the transmit memory (TM) buffer and the other is the receive memory (RM) buffer. At the other end of the transmission link there is a similar set of modules. The connection between the two sets is two coaxial lines. The elements of a single station are shown on the next page.

In operation, the transmit memory is loaded by the initiating computer with any number of words up to the 1024-word limit. Upon completion of that procedure, the sending T/R module will transmit all of the data in the buffer over the transmission coaxial line. The data are di-phase encoded, and are transmitted serially. A number of parity and control bits are also

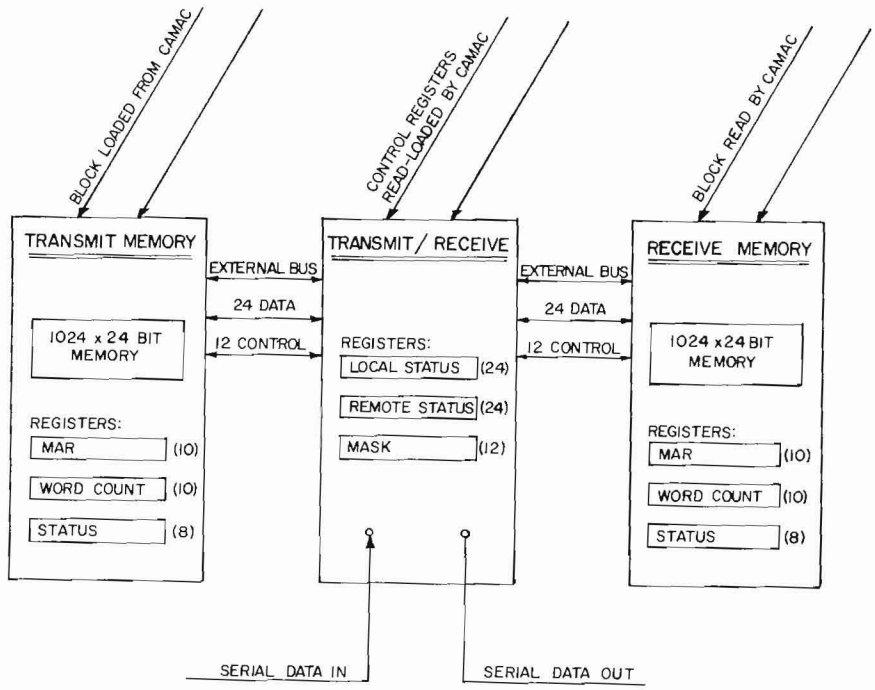

A single BISON-NET station as shown here contains three modules, one transmit receive module and two 1024-word memory modules. One of these serves as the transmit memory and an identical one serves as the receive memory. A receiving station of identical configuration is required for a single computer-to-computer connection.

transmitted to insure the validity of the transmitted data at the receiving end. At the end of the transmission, the receiving T/R module checks the validity of the transmitted data. It then returns, over the second coaxial line, an indication of the success or failure of the transmission. If a failure occurs, the data are automatically sent again by the initiating T/R module. This process will continue until the transmission is successful or until a total

failure of the transmission link is indicated. Once the data have been successfully transmitted from the originator to the receiver, the originating buffer may be filled again. However, the second set of data will not be transmitted until the data at the receiving end have been unloaded.

Each experimental group will be permitted to transmit the contents of one buffer memory for each beam spill. These data are directed by the user to a previously opened disk file. Band widths are such that under all conditions the user will be guaranteed the transmission of one full buffer within a full accelerator cycle. At times more than one such buffer may be accommodated, but the response will not then be guaranteed.

At any time the user may transmit a set of control data which will perform certain functions such as closing a storage file, initiating a new file, or placing a pre-stored program into the operating computer. Any job may be initiated by this method, and will be placed on the normal batch input queue of the computer with a high level of priority. The mean time to execute that job will depend upon the other concurrent demands on the central computers. Under normal conditions, the time delay would be of the order of some tens of seconds. Naturally, the response time for output will depend upon the magnitude of the computing required to complete the job. The output of such a computing job may be directed back to the initiating computer via an intermediate disk file and transmission via BISON-NET, or to printers either on the 7th floor of the Central Laboratory or at one of the remote job-entry terminals.

The primary function of BISON-NET, as already indicated, is to connect a number of the data acquisition computers in the experimental areas to the central computing facility in the Central Laboratory. At the central computing facility, either of the two CDC 6600 computers will be able to receive information from a number of BISON-NET terminals simultaneously. When the two CDC 6600's are connected in a symmetric manner later this year, the availability of at least one of them should be sufficient to allow access by a user of the BISON-NET at all times.

The design goal of BISON-NET is to service all experiments taking data such that a reasonable sample of data may be transmitted in real time directly to the Central Laboratory computers and to provide computing capability such that prompt results can be available at the experimenters' data-acquisition computer in a timely way.

Jobs may be initiated by the user at intervals more or less geared to a normal data run. Thus, it is assumed that the time between different computation tasks is measured in minutes, not in seconds. Furthermore, the total execution time for such jobs may not exceed a few per cent of the available computing time on one CDC 6600. Thus, exactly how much is computed in this mode must be judiciously monitored by each user. Administratively, such performance will also be watched very carefully and controls will be imposed on those using the system improperly. By no means is it assumed that final analysis can be accomplished on all data via the BISON-NET network, given the current shortage of computing capability at Fermilab.

Programmer R. Dunne examines a prototype BISON-NET station, mounted in its CAMAC crate.

Currently the production prototype BISON-NET modules are in service, and transmission between a PDP-11 and a CDC 6600 has been accomplished. The first data-acquisition computer installed in an experiment located in the Proton Area is being connected to the network. By the end of this year, a number of computers should be so connected. A typical configuration of BISON-NET modules is shown above.

To conserve transmission lines between the experimental areas and the Central Laboratory, only one transmission line to each area is currently being used. Each line is used by a number of computers using standard television multiplexing techniques. This limits the transmission from each experiment to a 1-MHz band width. However, all experiments so connected can transmit

simultaneously at this band width. This is adequate to reach the guaranteed performance level of the system. The connection of a single user to the network as it is currently being implemented is shown below; the Laboratory-wide cabling system is shown on the next page.

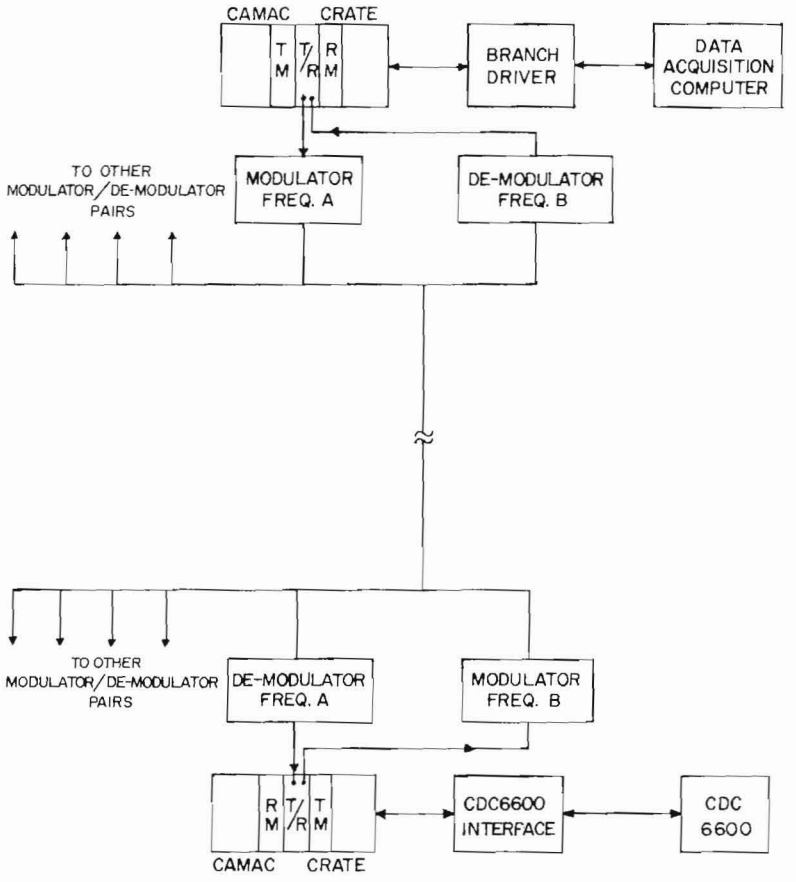

Diagram showing how a single experiment is connected to the BISON-NET system using television multiplexing techniques.

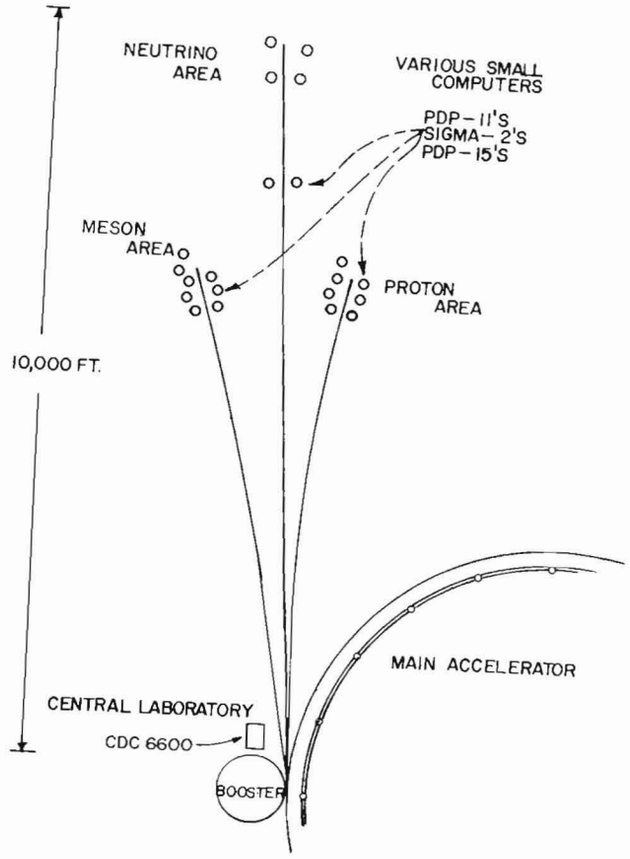

Diagram showing the Laboratory-wide cabling system for BISON-NET.

The software at the CDC 6600 end to handle the BISON-NET modules is system resident, and is constructed so that the user need only be concerned with his own analysis programs and a small number of additional control cards. Also, appropriate subroutines have been developed for the BISON-PDP-11 system to facilitate handling of the protocol for PDP-11 computers. At this time, software is not being developed for any computer other than the PDP-11. Experimenters with other equipment interested in using the BISON-NET system will have to develop their own protocol software. Further technical descriptions of both the BISON-NET hardware and software are available from the Computer Department librarian.

Another development currently under way by the Computing Department is a PDP-11-based remote job-entry terminal. Eventually, these terminals will be located in each experimental area on site, and possibly at other locations. They will utilize small card readers and 132-characters-per-line, 600-line-per-minute Verstatic electrostatic line printers. Each terminal will be able to handle jobs for either the CDC 6600 computers in the Central Laboratory or the 370/195 at Argonne National Laboratory simultaneously. Prototype systems are scheduled for first-level operation later this fall.

Other developments within the Computing Department include the design of a 30-character-per-second interactive terminal based upon the Diablo Hy-type printer. One interesting feature of this terminal is that it is a normal, high quality typewriter-like terminal with excellent printed-character copy. It also has a plotting capability with good resolution. If the prototype proves successful, this device will become the standard for non-portable hardcopy terminals at Fermilab.

Longer range plans are also under way to acquire major new equipment to satisfy in an integrated manner the fast turn-around, batch, and interactive computing needs of the Laboratory into the 1980's. With such planning in all areas of computing relevant to the high energy physics research program, Fermilab expects to be able to maintain a lean but adequate and responsive computing capability.

Reported by A. E. Brenner

NOTES AND ANNOUNCEMENTS

PROGRAM ADVISORY COMMITTEE MEETING SCHEDULED. . .

The fall meeting of the Fermilab Program Advisory Committee will be held on Thursday and Friday, November 20 and 21, 1975. Consideration of the recommendations from the Symposium on Bubble Chamber Hadron Physics will be among the principal items on the agenda. Proposals presented at the Proposal Presentation Meeting held on October 9 and 10 will also be discussed. The deadline for submitting written material to be considered at this PAC meeting is October 17, 1975.

PROPOSED FERMILAB WORKSHOP ON BISON-NET. . .

In order to facilitate an exchange of ideas among experimenters and members of the Computing Department, a workshop on BISON-NET and the related computing and communications problems will be held at Fermilab on Friday, November 7, 1975. At this workshop descriptions and demonstrations of the BISON-NET capabilities will be presented. This will be followed by a short tutorial on the first level of operation of the system. The intention of the workshop will also be to receive as much input as possible from the user community as to the directions in which BISON-NET and related systems should sensibly evolve in the future. Suggestions for new directions in which Fermilab computing should be moving to satisfy future needs will be invited. For further information, contact A. E. Brenner in the Computing Department, Ext. 3923.

WORKSHOP ON A SHORT-LIVED PARTICLE BEAM FACILITY PLANNED. . .

Construction of a beam facility for carrying out experiments with short-lived particles is included in the plans to increase the capability of the research facilities at Fermilab. The proposed new facility would be situated in a downstream location in the Proton-Center experimental area.

Although some planning for this facility has already occurred in connection with the proposals for Charged Hyperon #97 and Charged Hyperon #353, there is a need for additional user input in determining the preliminary design objectives of this new area. A workshop has been scheduled for Thursday and Friday, December 18 and 19, 1975, to deal with this subject. Physicists interested in research utilizing this type of facility are invited to attend and to communicate their ideas to Fermilab in the form of proposals (or letters of intent). This material will be organized for presentation and discussion at the meeting. A review of the relevant current theoretical ideas will also be presented.

To permit adequate time to organize this workshop, contributors are urged to submit written materials to be considered at the meeting to Fermilab by November 14, 1975. Questions regarding the meeting should be addressed to T. H. Groves in the Directors Office, Ext. 3211.

TELE-COPIER SERVICE ON TRIAL. . .

For the next three months, Tele-Copier service will be available on site in the ERDA office. This facsimile transmission is intended primarily for drawings, sketches, pictures, graphic data, and other information which

cannot be electrically transmitted via teletype, and should be used only when urgency justifies the higher costs involved. A listing of those ERDA offices and installations which maintain such service is kept at the Batavia Area Office on the 6th floor east of the Central Laboratory. Persons wishing to use the service should have the telephone number of the office to which they wish to transmit information. Anyone wishing to use this service should contact J. Curry, Ext. 3415.

FACILITY UTILIZATION SUMMARY -- AUGUST 1975

The momentum of the high energy physics research program at 400 GeV picked up during August, and although progress was not as great as had been hoped, there were a number of significant achievements. The accelerator itself ran reliably and, in fact, 400-GeV beam was provided to user groups during 73% of the slightly over 600 hours scheduled for high energy physics research, although spill structure and quality were poorer and unscheduled interruptions more frequent than during the recent operation at 300 GeV. Much of the downtime was related to problems with the capacitor bank for the main-ring power system, with switchyard septa repairs and several failures in power distribution switchgear accounting for most of the rest. Beam intensities were limited to 7 to 8×10^{13} protons per pulse by a combination of slow-spill splitting losses and experimental program requirements. Nevertheless, two experiments were completed and eighteen others used beam during the month.

After several unsuccessful attempts to commission the capacitor bank, it became clear early in August that sustained operation with that component would not be possible without major system modifications. Consequently, it was decided to operate at 400 GeV with a one-second flat-top and the shortest possible cycle period within the maximum power capability of the feeders. By raising the transformer secondary tap voltage and arranging the power supply turn-on sequence to balance feeder currents, a cycle period of 12.5 seconds was achieved. Machine operation continued through the remainder of the month with these magnet ramp parameters.

Eight experimental groups were active in the Meson Area during the month. Multiplicities #178 completed the data collection phase of their work in M6 West by mid-August. Experiments in the set-up and testing stage included Hadron Jets #236A, Neutron Elastic Scattering #248, Hadron Jets #260, and Particle Search #357, while Form Factor #216 and Photon Inclusive #268 used beam time to prepare for and begin second- and third-generation data taking runs as follow-ons to earlier work. One target was bombarded parasitically for Nuclear Chemistry #81A in their continuing survey program.

Neutrino physics dominated the program in the Neutrino Area during August. The Neutrino #21A/Neutrino #254 collaboration used available beam time, first to calibrate their detection and monitoring equipment, and later to begin taking data for their respective experiments. At the same time, the target for Quark #276 remained in place on the target train, for exposure whenever beam was available. After calibration runs for the neutrino experiments were completed, work was begun on the 30-inch bubble chamber/wide-gap spark chamber program. A 30,000-picture exposure for Experiment #138 was completed during the last week of August, and a 300,000-picture run with an incident 360-GeV π^- beam was started for Hybrid #281.

In the Proton Area, six groups used beam for their research efforts. A series of problems with controls interrupted operation of the entire area for several extended periods, which slowed progress. In Proton-East, Total Cross Section #25A ran exclusively, taking psi production data, although their efforts were thwarted several times by target box failures. Muon Search #48 finished a short data run in Proton-Central early in August, and

after several days off for a change-over, Di-Lepton #288 began to utilize available beam for tune-up and later for preliminary data taking. Photon Search #95A ran in Proton-West for beam tuning and equipment set-up during the first week of the month, after which Particle Production #284 carried out one and a half weeks of initial tuning and testing. The area was then off for several days to set up for tests by Proton-Proton Elastic #177A; that group ran for the remainder of August.

In the Internal Target Area, Proton-Nucleon Inelastic #317 and Particle Production #418 once again shared use of the facilities at C-Zero. The #317 group continued collecting data using the hydrogen and deuterium gas jet, while the #418 people took data using the rotating fiber target for about a third of the time.

The facility utilization summary for the month of August is as follows:

I. Summary of Accelerator Operations

		Hours	
A. Accelerator use for physics research			
Accelerator physics research		88.3	
High energy physics research		445.4	
Research during other use		(15.7)	
	Subtotal		533.7
B. Other activities			
Accelerator setup and tuning to experimental areas		12.9	
Scheduled interruption		46.8	
Unscheduled interruption		150.6	
	Subtotal		210.3
C. Unmanned time			
	Total		744.0

II. Summaries of High Energy Physics Research Use

	# of Expts.	Hours	Results
A. Counter experiments	16	3100.7	
B. Bubble chamber experiments	2	39.5	33,930 Pictures
C. Emulsion experiments	0	-	
D. Special target experiments	2	390.7	2 Targets
E. Test experiments	1	94.1	Background tests
F. Engineering studies and tests	0	-	
G. Other beam use	-	47.3	Beam tuning
	21	3672.3	

III. Number of Protons Accelerated and Delivered ($\times 10^{18}$) @ 400 GeV

		Protons
A. Beam accelerated in main ring	Total	0.679
B. Beam delivered to experimental areas		
Meson Area		0.301
Neutrino Area		
Main beam (N-0)		0.189
Bypass beam (N-7)		0.006
Proton Area		0.124
	Total	0.620

IV. Beam Utilization by Experiment

	Hours	
A. Meson Area		
Nuclear Chemistry #81A	-	1 Target
Multiplicities #178	150.6	
Form Factor #216	160.7	
Hadron Jets #236A	187.5	
Neutron Elastic Scattering #248	181.6	
Hadron Jets #260	314.4	
Photon Inclusive #268	143.4	
Particle Search #357	267.1	

	Hours	
B. Neutrino Area		
Neutrino # 21A	329.2	
Neutrino # 254	234.7	
Quark # 276	390.7	
30" p-p @ 400 GeV # 138	35.4	30,693 Pictures
30" Hybrid # 281	4.1	3,237 Pictures
C. Proton Area		
Photon Total Cross Section # 25A	260.3	
Muon Search # 48	30.4	
Photon Search # 95A	45.9	
p-p Elastic Scattering # 177A	94.1	Tests
Particle Production # 284	140.8	
Di-Lepton # 288	236.4	
D. Internal Target Area		
Proton-Nucleon Inelastic # 317	216.5	
Particle Production # 418	201.2	
Total	3625.0	

Reported by H. Allen

MANUSCRIPTS AND NOTES PREPARED DURING JULY AND AUGUST 1975

Copies of preprints with Fermilab publication numbers can be obtained from the Publications Office or Theoretical Physics Department, 3rd floor east, Central Laboratory. Copies of all articles listed are on the reference shelf in the Fermilab Library.

Experimental Physics

University of Notre Dame-Duke University-Particle Physics Institute of Canada Collaboration Experiment #2B	"Leading Clusters" in 200 GeV/c $\pi^- p$ Inclusive Reactions (Presented by V. P. Kenney, Notre Dame, at the 1975 International Conf. on High Energy Physics, Palermo, Italy, June 1975)
H. R. Gustafson et al. Experiment #4	Calorimeter Calibration (Submitted to the XIV International Conf. on Cosmic Rays, Munich, W. Germany, August 1975)
C. A. Ayre et al. Experiment #4	Neutron-Nucleus Total Cross Section, 30-270 GeV (Submitted to the XIV International Conf. on Cosmic Rays, Munich, W. Germany, August 1975)
B. C. Barish et al. Experiment #21	Calibration of a Sampling Total Absorption Detector Designed for Neutrino Experiments (Submitted to Nucl. Instr. and Methods)
Y. Watanabe et al. Experiment #26	Test of Scale Invariance in Ratios of Muon Scattering Cross Sections at 150 and 56 GeV
C. Chang et al. Experiment # 26	Observed Deviations from Scale Invariance in High-Energy Muon Scattering (Submitted to the 1975 International Conf. on High Energy Physics, Palermo, Italy, June 1975)
T. Ferbel Experiment # 27A Experiment # 305	Studies of Neutron Dissociation at Fermilab Energies (Invited paper at the 1975 International Conf. on High Energy Physics, Palermo, Italy, June 1975)
G. M. Raisbeck et al. Experiment # 81A	Cross Sections for the Production of Li and Be Isotopes in Carbon Targets Irradiated by 300 GeV Protons (Submitted to Physics Letters)

N. T. Porile and Y. W. Yu Experiment #81	Interaction of ^{197}Au with 300 GeV Protons: Cross Sections and Recoil Properties in the A ~ 130 Mass Region (Submitted to Phys. Rev. C)
Fermilab Single Arm Spectrometer Group (D. S. Ayres et al.) Experiment #96	Measurement of Elastic Scattering of Hadrons on Protons from 50 to 175 GeV/c (FERMILAB-Pub-75/48-EXP; submitted to Phys. Rev. Lett.)
A. S. Carroll et al. Experiment #104	Total Cross Sections of $\pi^{\pm}$, $K^{\pm}$, p, and $\bar{p}$ on Protons and Deuterons Between 23 and 280 GeV/c (FERMILAB-Pub-75/51-EXP; submitted to Phys. Lett.)
J. Hébert et al. Experiment #116 Experiment #233	Some Trends in High-Energy Proton-Nucleus Interactions in Nuclear Emulsion (Submitted to the XIV International Conf. on Cosmic Rays, Munich, W. Germany, August 1975)
G. Fujioka et al. Experiment #117A	Proton-Nucleus Interactions at High Energies (Submitted to the XIV International Conf. on Cosmic Rays, Munich, W. Germany, August 1975)
G. Fujioka et al. Experiment #117A	Particle Correlations in Proton-Nucleon Collisions at 205 GeV/c
M. Teranaka and T. Ogata Experiment #117A	Mass Number Dependence of Inelastic Cross Section for High-Energy Proton-Nucleus Collision
H. Fukushima and G. Fujioka Experiment #117A	Interpretation of Inelastic Hadron-Nucleus Collisions
O. Kusumoto et al. Experiment #117A Experiment #250	Coherent Multiple Production in Proton-Nucleus Collisions at 200 and 300 GeV/c
M. Teranaka and T. Ogata Experiment #117A	Multi-particle Production in High-Energy Proton-Nucleus Interaction
G. Fujioka et al. Experiment #117A	Backward Emission of Relativistic Particles in the Laboratory System in 200 GeV Proton-Nucleus Collisions (Submitted to the Journal of the Physical Society of Japan)
P. H. Garbincius Experiment #118	Scintillation in Pilot 425 and UVT Lucite (Submitted to Nucl. Instr. and Methods)

S. J. Barish et al. Experiment #141A	Study of the Reaction $p + p \rightarrow \Delta^{++}(1236) + X^0$ at 205 GeV/c (Submitted to Phys. Rev.)
W. Busza et al. Experiment #178	Charged-Particle Multiplicity in π^--Nucleus Interactions at 100 and 175 GeV/c [Phys. Rev. Lett. 34, 836 (1975)]
A. I. Borisenko et al. Experiment #183	Energetic Helium Nuclei in Proton-Nuclear Disintegrations at 200 GeV
Y. Akimov et al. Experiment #186	Proton-Deuteron Elastic Scattering at Small Momentum Transfer from 50 to 400 GeV/c (Fermilab-Pub-75/27-EXP; submitted to Phys. Rev.)
D. L. Burke et al. Experiment #230	Search for Anomalous Multiphoton Production at Fermilab Energies
L. W. Jones et al. Experiment #230	Charged-Prong Multiplicity and Angular Distributions from Nucleon-Nucleus Interactions (Submitted to the XIV International Conf. on Cosmic Rays, Munich, W. Germany, August 1975)
Y. Homma et al. Experiment #252	Some Features in Rapidity Space of Multiparticle Production by Proton-Proton Collision at 102 GeV/c
R. Bosshard et al. Experiment #261	X-Ray Transition Radiation from 50 GeV Electrons (Submitted to Phys. Lett. B)
R. Bosshard et al. Experiment #261	Transition Radiation from 100 to 250 GeV/c Pions (Submitted to Phys. Lett.)
P. D. Zemany et al. Experiment #311	$\rho^0\rho^0\pi^-$ Production in the Reaction $\bar{p}n \rightarrow 3\pi^- 2\pi^+$ Near 2190 MeV C.M. Energy (Submitted to Nucl. Phys. B)
P. D. Zemany Experiment #311	A Study of Double Scattering Effects in Antiproton-Deuteron Annihilation (Submitted to the IV International Nucleon-Antinucleon Symposium, Syracuse University, May 1975)
J. Whitmore et al. Experiment #311	Charged-Particle Multiplicities in 100 GeV/c $\bar{p}p$ Interactions (Submitted to the IV International Nucleon-Antinucleon Symposium, Syracuse University, May 1975 and Phys. Rev. Lett.)

Cambridge-Fermilab-Michigan State Collaboration (Presented by W. W. Neale) Experiment #311	Analysis of Antiproton Reactions at 100 GeV/c (Submitted to the 1975 International Conf. on High Energy Physics, Palermo, Italy, June 1975)
G. J. Blanar et al. Experiment #365	Measurement of ψ(3.1) Meson Production by Pions and Protons (Submitted to Phys. Rev. Lett.)

Theoretical Physics

W. A. Bardeen et al.	Infrared Behavior of the Reggeon Field Theory for the Pomeron (FERMILAB-Pub-75/39-THY; submitted to Phys. Rev. D)
M. B. Einhorn and C. Quigg	Comment on the SPEAR Charm Search (FERMILAB-Pub-75/42-THY; submitted to Phys. Rev. Lett. Comments and Addenda)
J. Bartels and E. Rabinovici	Multiparticle Production in Reggeon Field Theory (FERMILAB-Pub-75/43-THY; submitted to Phys. Rev. Lett.)
F. A. Wilczek et al.	Weak Interaction Models with New Quarks and Right-Handed Currents (FERMILAB-Pub-75/44-THY; submitted to Phys. Rev. D)
R. N. Cahn	Angular Distributions in the Decay $\psi' \to \psi\pi\pi$ (FERMILAB-Pub-75/45-THY; submitted to Phys. Rev. D)
R. N. Cahn	On the Separation of $\psi \to \pi^+\pi^-\gamma$ from $\psi \to \pi^+\pi^-\pi^0$ (FERMILAB-Pub-75/46-THY; submitted to Phys. Rev. D Comments and Addenda)
H. D. I. Abarbanel et al.	Inclusive Cross Sections and Angular Distributions in Reggeon Field Theory (FERMILAB-Pub-75/49-THY; submitted to Phys. Rev. D)
C. H. Albright and R. J. Oakes	SU(4)/Z(2) Symmetry, Sextet Quarks, and a U(2) Gauge Theory (FERMILAB-Pub-75/53-THY; submitted to Phys. Rev. Lett.)
R. N. Cahn and M. S. Chanowitz	Radiative Decays as Tests of the Symmetries of the ψ Particles (FERMILAB-Pub-75/54-THY; submitted to Phys. Rev. Lett.)

G. L. Kane — The A_1 Problem, and Should SU(3) Multiplets be Complete (FERMILAB-Conf-75/60-THY; talk presented at "New Directions in Hadron Spectroscopy," Argonne National Laboratory, July 7-10, 1975)

General

J. Lach — Antiproton Physics at Fermilab--A Review (FERMILAB-Conf-75/47-EXP; invited talk at the IV International Nucleon-Antinucleon Symposium, Syracuse University, May 1975)

M. B. Einhorn — Introduction to SU_4 and the Properties of Charmed Hadrons (FERMILAB-LECTURE-75/1-THY/EXP)

DATES TO REMEMBER

October 9-10, 1975	Proposal Presentation Meeting will be held if enough new proposals are received to warrant it. Contact T. H. Groves, Ext. 3211, after September 26 for more information.
October 11, 1975	Fermilab Auditorium Arts Series: Fine Arts Quartet. Tickets available in Guest Office.
October 17, 1975	Deadline for receipt of all written materials to be considered at the fall meeting of the Program Advisory Committee.
November 7, 1975	Workshop on BISON-NET and related computing and communications problems at Fermilab. Contact A. E. Brenner, Ext. 3923, for more information.
November 14, 1975	Deadline for receipt of materials to be considered at the Workshop on a Short-Lived particle Beam Facility.
November 20-21, 1975	Fall meeting of the Fermilab Program Advisory Committee.
December 18-19, 1975	Workshop on a Short-Lived Particle Beam Facility.