NALREP

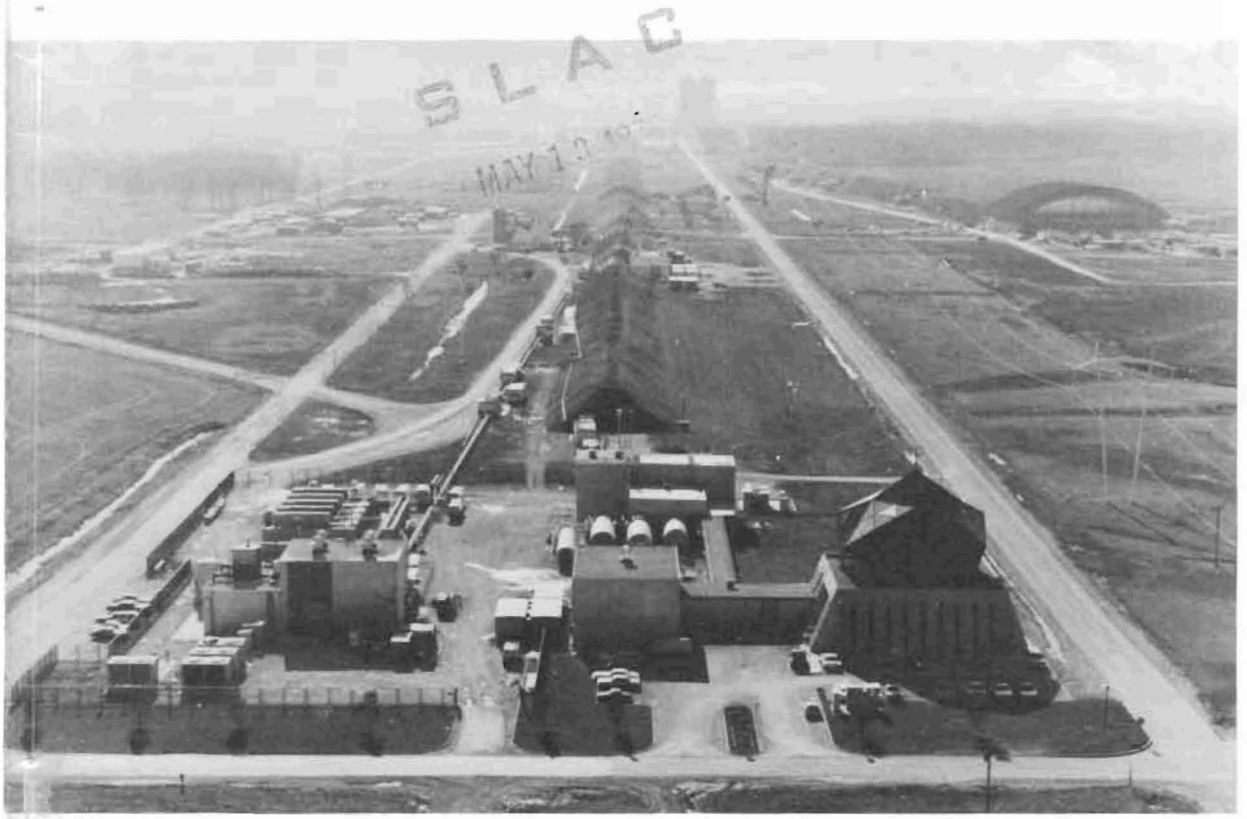

SLAC
MAY 13 19
LIBRARY

Monthly Report of the Fermi National Accelerator Laboratory April 1975

Fermi National Accelerator Laboratory

NALREP is published monthly by the Fermi National Accelerator Laboratory, P. O. Box 500, Batavia, Illinois 60510.

J. R. Sanford, Editor
N. Stiening, Assistant Editor

The presentation of material in NALREP is not intended to substitute for or preclude its publication in a professional journal, and reference to articles herein should not be cited in such journals.

Contributions and comments should be addressed to the Program Planning Office. Requests for copies should be addressed to the Publications Office.

FERMILAB-75-4 0090.01

The Cover: An aerial view of the Neutrino Area with the counter neutrino facility (Lab C) in the center, the control building for the 15-foot bubble chamber on the right and the building containing the 30-inch bubble chamber on the left. In the distance the Meson Area can be seen on the right and the Proton Area on the left.

Operated by Universities Research Association Inc. under contract with the Energy Research and Development Administration

CONTENTS APRIL 1975

The Neutrino Area 1

Notes and Announcements

Accelerator Division Appointments 12

John Peoples Appointed Head of Research Division 12

Janice Roberts Returns to Guest Office 12

New Fermilab Housing Rates Established 12

Rental and Lease Cars Available at Fermilab 13

Experimental Program Situation Report 14

Diagram: Location of Experiments at Fermilab, Spring 1975 16

Facility Utilization Summary--March 1975 17

Proposals Received During February and March 1975 22

Dates to Remember

NEUTRINO AREA

Some of the earliest proposals for experiments received by the Laboratory were to study neutrino interactions. This led to an examination of numerous experimental area designs in order to develop one suitable for these experiments. These studies included detailed examinations of detectors and beams as well as general concepts for the experimental area. From these studies it was possible to layout the desired experimental area, which became known as the Neutrino Area. The Neutrino Area was the first experimental facility to be completed, and started using the proton beam in May, 1972.

The types of physics to be done in the Neutrino Area can be summarized as follows:

Neutrino Physics:

This includes both broad-band and narrow-band energy spectrum neutrino beams for counter and bubble chamber detectors.

Muon Physics:

Because muons accompany the neutrino beams, it was natural to put the first muon detectors in this area.

Hadron Bubble Chamber Physics:

Once it was decided that the Neutrino Area would have a new large bubble chamber for neutrino physics, it was natural to provide it with a charged-particle beam. By the addition of an existing small bubble chamber in this area, one could also obtain a quick "look" at hadron physics at high energies.

In developing the Neutrino Area, the central factor was the neutrino beam itself. A proton beam transport region was necessary to focus the main high intensity proton beam onto a target. The target region required beam monitoring equipment and a focusing system to collect the pions and kaons emitted from the target. There must then be a sufficiently long decay space for a reasonable fraction of the pions and kaons to decay into neutrinos and the accompanying muons. This decay space must be evacuated so that the pions and kaons would decay without disappearing by interaction. After decay the muons must be absorbed or deflected so that only neutrinos enter the experimental apparatus. Approximately 30,000 tons of material are necessary to absorb 400 GeV/c muons arising from the broad band focusing system. The combination of the decay path and absorber leads to an experimental area that is 1.6 km long. A schematic drawing of the Neutrino Area is shown on the next page.

Because of the requirement for different high intensity beams, such as broad band neutrino, narrow band neutrino and muon beams, it was decided to put each target and focusing system on railroad cars. In this way it is possible to change from one system to another or to repair apparatus on the train. Since the targeting apparatus becomes very radioactive, it is necessary to have a special target handling area for servicing trains.

There are three target trains each of which will fit into the 200-foot long, 6-foot diameter target tube. There is also a 200-foot train in Neuhall just ahead of the target tube used for proton beam transport to the target on a train. The three trains are:

FIGURE 1

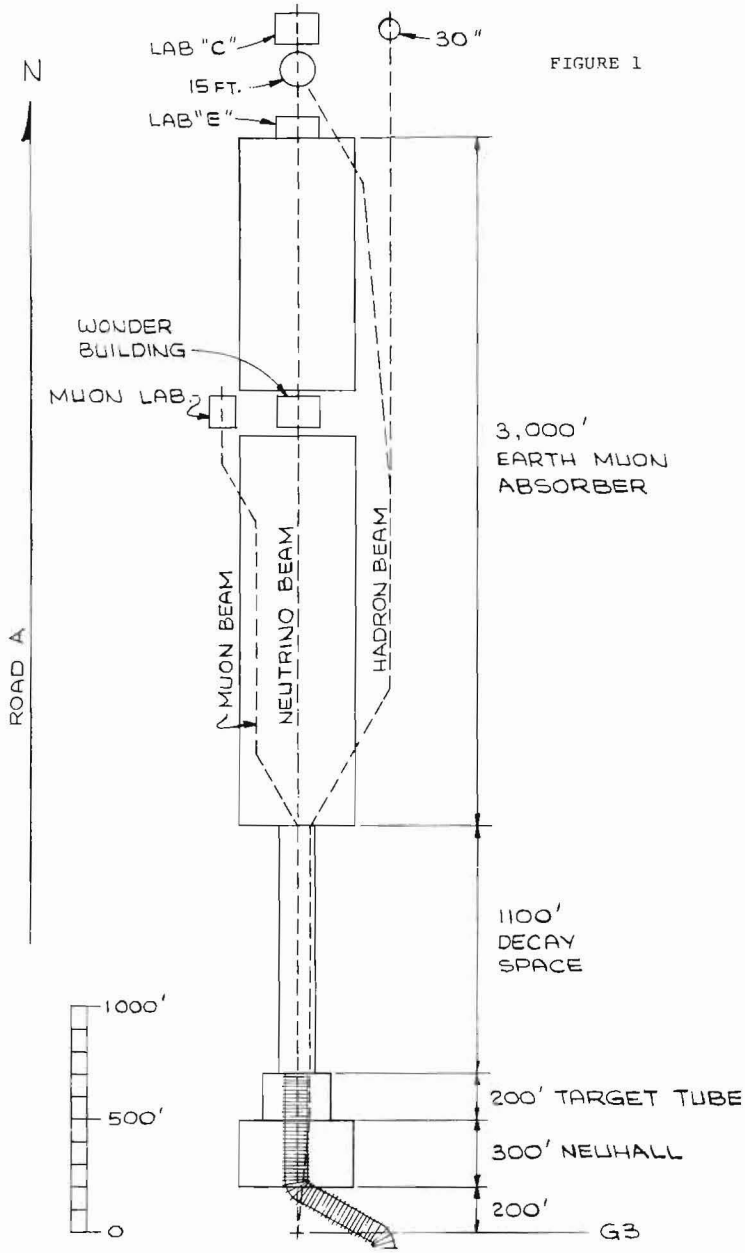

Schematic drawing of the Fermilab Neutrino Area, which lies 3300 feet north of the Central Laboratory Building.

Broad Band Neutrino Train:

This train has special "horn" magnets to focus all pions and kaons of one charge. It was described in the August 1974 NALREP. The train is used for neutrino physics in the 15-foot bubble chamber (Experiments #31, #45A, #155) and for the broad band neutrino counter facility located in Lab C (Experiment #1A).

Narrow Band Neutrino Train:

This train bends and focuses using conventional magnets the produced pions and kaons to form a beam with fixed charge and with a narrow band of momenta. It is used for neutrino experiments E21, E262, and E320 located in the Wonder Building.

Triplet Train:

This train contains a triplet of conventional quadrupole magnets and focuses produced pions and kaons of both signs of charge. It has principally been used for muon experiments E26 and E98, although it has been used for high energy broad band neutrinos (E370).

In conjunction with all of these trains, the hadron beam for the bubble chambers passes beside the neutrino train as shown in the drawing. By various targeting schemes or absorption methods, the hadron beam is used to produce enriched beams of protons, antiprotons, pions or kaons. There is a Cerenkov-proportional wire tagging system for the beams to both the 15-foot and 30-inch bubble chambers (see July 1974 NALREP).

To complete the beam area following the 1100 foot long, 3 foot diameter decay tube, there is a 3000 foot earth muon absorber to remove the unwanted muons and purify the neutrino beam. On the side of the earth filter are many small magnet enclosures. The properties of the Neutrino Area beams are summarized below:

TABLE I

NEUTRINO AREA BEAMS

BEAM	PARTICLE	YIELD FOR 10^{13} INCIDENT PROTONS (300 GeV)
Broad Band Neutrino	ν	3×10^{10} ν peaked at 15 GeV ~1 interaction/ 30 tons of target
	$\bar{\nu}$	2×10^{10} $\bar{\nu}$ peaked at 15 GeV ~1 interaction/ 120 tons of target
Narrow Band Neutrino	ν	4×10^{8} ν peaked at 40 GeV 3×10^{7} ν peaked at 105 GeV ~1 interaction/900 tons of target
	$\bar{\nu}$	1.6×10^{8} $\bar{\nu}$ peaked at 40 GeV 7×10^{6} $\bar{\nu}$ peaked at 105 GeV ~1 interaction/6,000 tons of target
Triplet Train	μ	6×10^{5} μ^+ at 150±1.5 GeV 2×10^{5} μ^- at 150±1.5 GeV halo = 1.0
	$\nu+\frac{2}{3}\bar{\nu}$	1.5×10^{9} peaked at 40 GeV ~1 interaction/400 tons of target
	π	10^{7} π^- at 150±1.5 GeV into Muon Area
Hadron Beam With $\hat{C}$ Tagging	π^-, p	25-300 GeV $\Delta p/p$ = .1 - 1.0%
	π^+	25-200 GeV
	$\bar{p}$	50-125 GeV
	K^+	Tests in progress
	π^++p	5×10^{5} at 150±1.5 GeV

The Neutrino Department has five detector facilities; counter neutrino experiments are done in Lab C as well as in the Wonder Building, Muon Lab, 30-inch and 15-foot bubble chambers. Nominally two of these five facilities are in operation at any given time. These facilities will not be discussed in detail here, since some of them have been presented in NALREP and the others will be presented in future articles. Figure 2 is a rough sketch of each facility and Table II summarizes the characteristics of each facility. The figures have been drawn to the same relative scale so that comparisons of size can be made.

Two of these facilities will be improved this calendar year. The building containing the counter broad band neutrino facility (Lab C) will be enlarged by a factor of 2 to make space for larger diameter magnets for muon detection and measurement. Also the hadron calorimeter will have lead plates added to increase the target mass and increase the ability to identify electromagnetic showers.

The counter narrow band facility will get a new building designated Lab E to be located ahead of the 15 foot bubble chamber. This will replace the Wonder Building located in the midst of the earth shield. The toroidal magnet will also be replaced with three 12 foot diameter, 8 foot long magnets to give better acceptance for muons.

The possibility of extending the operation of the horn to a pulse of 1 millisecond is being investigated. If this is done then all three neutrino facilities, Lab E, 15 foot bubble chamber, and Lab C, could run simultaneously.

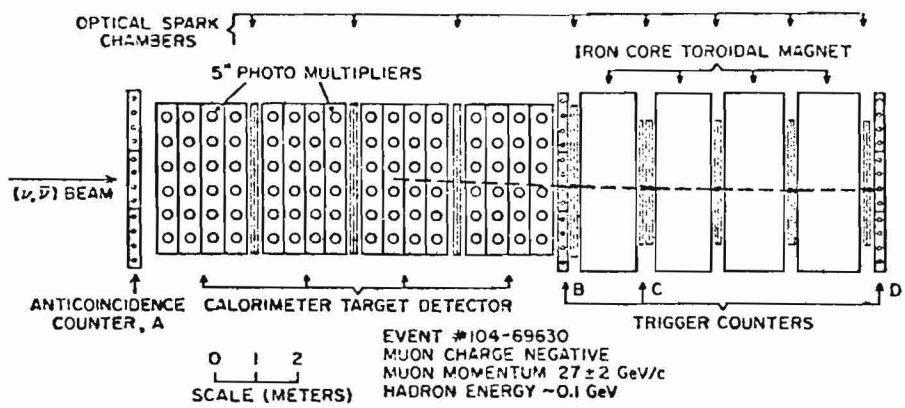

A. Broad Band Neutrino Counter Facility

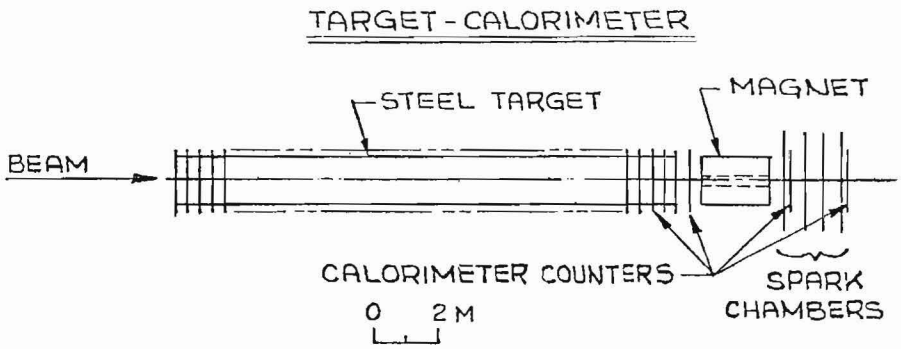

B. Narrow Band Neutrino Counter Facility

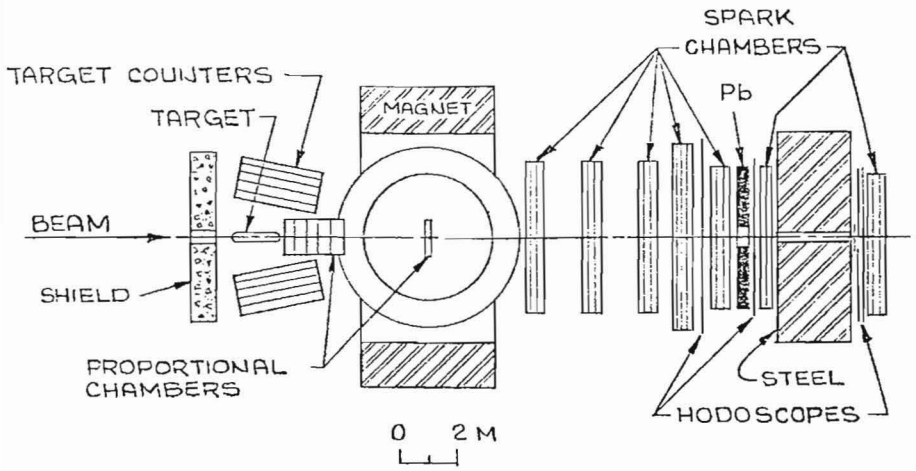

C. Muon Lab Facility

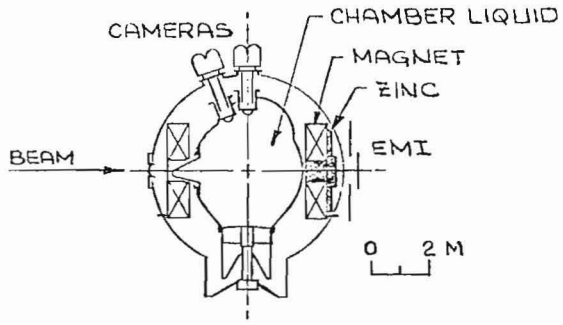

D. 15' Bubble Chamber Facility

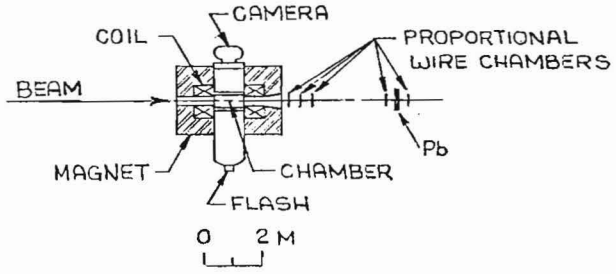

E. 30" Bubble Chamber Hybrid Facility

TABLE II

NEUTRINO DEPARTMENT FACILITIES

FACILITY	CHARACTERISTICS
Counter Broad Band Neutrino (Detector located in Lab C)	Useful Target - 20 tons liquid scintillator Hadron energy ±15% by liquid scintillator Muon identification acceptance see Fig. 3 Wide gap spark chambers Toroidal magnets
Counter Narrow Band Neutrino (Wonder Bldg.)	Useful Target - 80 tons steel Hadron energy ±20% by steel - scintillator sandwich Muon identification acceptance see Fig. 3 Wire chambers Toroidal magnet
Muon Lab	Target-Hydrogen, metal, etc. Cyclotron magnet. 15 kG - 4 ft × 12 ft × 12 ft Multiwire proportional chambers around target Magnetostrictive wire chambers downstream of magnet Muon identification (see Fig. 3)
15-ft B.C.	Useful Target - 1 ton hydrogen 2 tons deuterium 20 tons neon 3 meter fiducial length for hadrons Setting ~ 300 μ Muon identification EMI (see December 74 NALREP) Magnetic field 30 kG Tagging system for hadrons 2 Cerenkov + 9 wire planes
30-in. B.C.	Useful Target - 0.3 meter H_2, D_2, neon Setting error 40 μ Magnetic field 25 kG Tagging system for hadrons Cerenkov + 12 wire planes Downstream proportional wire system with 12 planes (see Fig. 1)

Since the Neutrino Area was the first external experimental area to take beam, it has accumulated extensive operating experience. As of January 1, 1975, there were 41 completed experiments, and 55 remaining approved experiments. During 1974 the accelerator provided beam for 43 weeks. The Neutrino Department used the beam for 39 weeks (with 2 additional weeks for train changes and 2 weeks of down time). The experiments done in the Neutrino Area beams were:

Neutrino and Muon Lines:

Experiment 1A	16 weeks	
Experiment 262	6 weeks	
Experiment 320	6 weeks	
Counter neutrino		28 weeks
Experiment 98	9 weeks	
Experiment 26	2 weeks	
Counter muon		11 weeks
		39 weeks

Hadron Beams:

30" hadrons	19 experiments, 1.115×10^6 pictures,	18 weeks
15' hadrons	3 experiments, 69K pictures,	4 weeks
15' neutrino	3 experiments, 108K pictures,	8 weeks
16 tests or small experiments (emulsions, etc.)		9 weeks
		39 weeks

The first results from the Neutrino Area came from the 30-inch bubble chamber. Whereas these experiments did not produce new exciting discoveries, they did produce inclusive data for pions, protons, lambdas, antilambdas, neutral kaons, and some resonances; i.e., rho and delta in addition to multiplicity and production data.

The neutrino experiments have given data confirming neutral currents and Experiment E1A has new exciting data on dimuon production. Neutrino Experiment E21 has produced detailed total cross section data. Muon Experiment E26 has published a paper suggesting scaling violations between SLAC and Fermilab energies.

All of the Neutrino Area facilities have produced recent data that should give exciting results during 1975.

Reported by F. Russ Huson

NOTES AND ANNOUNCEMENTS

ACCELERATOR DIVISION APPOINTMENTS. . .

Phil Livdahl has been appointed Head of the Accelerator Division effective May 1, 1975. He will replace Paul Reardon who has accepted a position at Princeton University. The Deputy Head will be Russ Huson who has been a long-time member of the Neutrino Department. In another appointment Jim Walker of the Neutrino Department has been appointed Head of the Internal Target Group of the Accelerator Division. In this position he will take over the duties of Drasko Jovanovic.

JOHN PEOPLES APPOINTED HEAD OF RESEARCH DIVISION. . .

John Peoples of the Physics Department has been appointed Head of the Research Division, effective June 1, 1975. He will take over from Jim Sanford, the Acting Head, who will continue his duties in the Directors Office.

JANICE ROBERTS RETURNS TO GUEST OFFICE. . .

Janice Roberts has resumed her responsibilities in the Guest Office after spending a year in England.

NEW FERMILAB HOUSING RATES ESTABLISHED. . .

The Laboratory has made a careful and extensive study of housing expenses compared to housing income and reluctantly finds it necessary to raise the rents on all Fermilab housing units as of May 1, 1975.

If you wish more details, please contact the Housing Office on Extension 3560 or 3777.

RENTAL AND LEASE CARS AVAILABLE AT FERMILAB. . .

Fermilab has rental and lease cars available on site, at the Travel Office located in the Central Laboratory, 1-W. Pilots Leasing Company, which has been a contractor of long standing with the Laboratory, offers special rates to experimenters. Daily rentals for Chevrolet Vega Hatchbacks or Ford Pintos are quoted at $7.00 per day and $0.07 per mile.

For experimenters or visitors that require vehicles for longer time periods, special monthly rates are available with no mileage charges. They are as follows:

1 month	$225.00
3 months	$205.00
6 months	$189.00
12 months	$172.00

All of the above rates include maintenance, liability and property damage insurance and $100.00 deductible collision coverage. The rates do not include gasoline or oil. Larger cars are available.

Payment may be made personally, through home institutions, or charged to the Work Package code. Credit cards are not accepted. Monthly rates are predicated upon monthly payments due 30 days in advance.

At least two days notice should be given for monthly rates. For more detailed information and reservations contact the Fermilab Travel Office at 840-3397.

SITUATION REPORT-APRIL 1975

FERMI NATIONAL ACCELERATOR LABORATORY

J. R. SANFORD

1 APR 1975

EXPERIMENTAL PROGRAM SITUATION REPORT

THE EXPERIMENTAL PROGRAM SITUATION AT FERMILAB IS SUMMARIZED BELOW. THE EXPERIMENTS ARE LISTED SEPARATED BY EXPERIMENTAL AREA UNDER CATEGORIES THAT BEST DESCRIBE THEIR CIRCUMSTANCE AS OF APRIL 1, 1975. FOR EXPERIMENTS WHICH HAVE BEEN COMPLETED OR HAVE RECEIVED BEAM THERE IS INDICATION OF THE AMOUNT OF RUNNING TIME OR EXPOSURE. THE EXPERIMENTAL AREA NAMES ARE ABBREVIATED AS FOLLOWS: INTERNAL TARGET AREA (ITA), MESON AREA (MA), NEUTRINO AREA (NA), PROTON AREA (PA). PUBLICATIONS HAVE BEEN PREPARED OR TALKS GIVEN ABOUT THE EXPERIMENTS MARKED WITH AN '*'.

TOTAL NUMBER OF APPROVED EXPERIMENTS - 195

AREA-BEAM		SPOKESPERSON	EXTENT OF RUN TO DATE	DATE COMPLETED
A. EXPERIMENTS THAT HAVE COMPLETED DATA TAKING (79):				
MA -M1	*ELASTIC SCATTERING #7	MEYER	2,350 HOURS	28 JAN 75
	*DETECTOR DEVELOPMENT #229	YUAN	300 HOURS	16 NOV 74
	*DETECTOR DEVELOPMENT #261	WANG	600 HOURS	20 NOV 74
-M2	*MULTIGAMMA #22	COLLINS	350 HOURS	26 JUN 74
	MISSING MASS #51A	VON GOELER	800 HOURS	23 OCT 74
	*QUARK #75	YAMANOUCHI	1,050 HOURS	8 SEP 73
	*PION CHARGE EXCHANGE #111	TOLLESTRUP	1,800 HOURS	19 SEP 74
	PARTICLE SEARCH #365	GARELICK	200 HOURS	5 FEB 75
-M3	*NEUTRON CROSS SECTION #4	LONGO	1,450 HOURS	20 MAR 74
	*NEUTRON DISSOCIATION #27A	ROSEN	850 HOURS	24 APR 74
	MULTIGAMMA #230	LONGO	50 HOURS	24 APR 74
-M4	*QUARK #72	LEIPUNER	500 HOURS	11 JUN 73
-M6	ELASTIC SCATTERING #96	RITSON	2,550 HOURS	17 FEB 75
	*MULTIPLICITIES #174	BUSZA	550 HOURS	18 JUN 74
-OTHER	*EMULSION/PROTONS @ 200 #90	WOLTER	4 STACKS	20 SEP 72
	*EMULSION/PROTONS @ 200 #103	KING	1 STACK	20 SEP 72
	*EMULSION/PROTONS @ 200 #105	MALHOTRA	1 STACK	20 SEP 72
	*EMULSION/PROTONS @ 200 #114	JAIN	1 STACK	20 SEP 72
	*EMULSION/PROTONS @ 200 #116	HEBERT	5 STACKS	20 SEP 72
	*EMULSION/PROTONS @ 200 #117A	KUSUMOTO	11 STACKS	20 SEP 72
	*EMULSION/PROTONS @ 200 #156	NIU	13 STACKS	20 SEP 72
	*EMULSION/PROTONS @ 200 #171	LORD	6 STACKS	20 SEP 72
	*EMULSION/PROTONS @ 200 #183	TRETJAKOVA	3 STACKS	20 SEP 72
	EMULSION/PROTONS @ 200 #189	RITSON	2 PLATES FROM EXP #171	20 SEP 72
	SUPER-HEAVY ELEMENTS #147	DEHEAUVAIS	3 EXPOSURES	29 AUG 73
	DI-MUON #337	EARTLY	5 HOURS	7 FEB 75
NA -NEUTRINO	*NEUTRINO #1A	CLINE	1,950 HOURS	1 DEC 74
	*NEUTRINO #267	BARISH	400 HOURS	20 MAR 74
-MUON/HADRON	*MUON #26	HAND	900 HOURS	16 APR 74
	MUON #98	ANDERSON	1,800 HOURS	17 FEB 75
-15-FT	15-FOOT ENGINEERING RUN #234	HUSON	57K PIX	5 NOV 74
-30-IN	*30-INCH HYBRID #28	SMITH	479K PIX	22 APR 74
	*30-INCH P-P @ 300 #37A	MALAMUD	51K PIX	1 JUN 73
	*30-INCH PI+ - P @ 100 #121A	LANDER	104K PIX	23 JAN 74
	*30-INCH PI- - P @ 100 #125	MORRISON	53K PIX	28 AUG 73
	*30-INCH PI- - P @ 200 #137	HUSON	48K PIX	10 MAR 73
	*30-INCH P-P @ 200 #141A	FIELDS	67K PIX	27 NOV 72
	30-INCH PI- - P @ 300 #143A	KALAFLETSCH	51K PIX	10 APR 74
	*30-INCH HYBRID #154	PLESS	105K PIX	13 MAR 74
	*30-INCH P - PENE @ 300 #161	MAPP	51K PIX	25 JUN 74
	*30-INCH PI- - PENE @ 200 #163A	WALKER	52K PIX	18 JUN 74
	*30-INCH PI+ - P @ 200 #217	LANDER	85K PIX	15 MAY 74
	*30-INCH PI- - D @ 200 #218	YAGER	72K PIX	18 SEP 74
	30-INCH PI+/P - P @ 60 #228	FERBEL	37K PIX	15 APR 74
	*30-INCH P-P @ 100 #252	FERBEL	33K PIX	6 DEC 72
	30-INCH PBAR - P @ 100 #311	NEALE	98K PIX	27 JAN 75
-OTHER	*CACPOLE #3	EBERHARD	4 TARGETS EXPOSED	1 SEP 74
	*PROTON-PROTON INELASTIC #14A	FRANZINI	140 HOURS	21 JUN 73
	LONG-LIVED PARTICLES #115	STEVENSON	6 HOURS	23 NOV 74
	*MASSIVE PARTICLE SEARCH #199	FRANKEL	2 TARGETS EXPOSED	22 AUG 73
	BEAM DUMP #211	GOEBEL	2 HOURS	14 NOV 73
	LONG-LIVED PARTICLES #239	FRATI	350 HOURS	3 FEB 74
	DETECTOR DEVELOPMENT #34	HUGGETT	50 HOURS	26 JUN 74
	EMULSION/PROTONS @ 300 #181	CARY	3 STACKS	20 OCT 73
	EMULSION/PROTONS @ 300 #195	LIM	3 STACKS	20 OCT 73
	EMULSION/PROTONS @ 300 #232	KING	2 STACKS	20 OCT 73
	EMULSION/PROTONS @ 300 #233	HEBERT	8 STACKS	20 OCT 73
	EMULSION/PROTONS @ 300 #237	LORD	10 STACKS	29 MAR 74
	EMULSION/PROTONS @ 300 #242	NIU	2 STACKS	20 OCT 73
	EMULSION/PROTONS @ 300 #244	JAIN	1 STACK	20 OCT 73
	EMULSION/PROTONS @ 300 #250	KUSUMOTO	1 STACK	20 OCT 73
	EMULSION/PROTONS @ 300 #275	ENGE	4 STACKS	20 OCT 73
	*EMULSION/MUONS @ 150 #255	JAIN	1 STACK	16 OCT 73
	EMULSION/MUONS @ 150 #205A	KUSUMOTO	2 STACKS	16 OCT 73
	EMULSION/PI- @ 200 #264	YOUNG	2 STACKS	7 OCT 74
	EMULSION/PI- @ 200 #328	TRETJAKOVA	5 STACKS	7 OCT 74
	QUARK #297	LEIPUNER	50 HOURS	10 JUL 74
	DETECTOR DEVELOPMENT #327	ALLISON	50 HOURS	7 FEB 75
PA -PE	*PARTICLE SEARCH #100A	PIROUE	1,150 HOURS	4 APR 74
-PC	*LEPTON #70	LEDERMAN	2,800 HOURS	1 DEC 74
	*PARTICLE SEARCH #187	LEDERMAN	200 HOURS	6 NOV 73
ITA-C-O	*PROTON-PROTON SCATTERING #36A	COIL	700 HOURS	24 JUN 73
	*PHOTON SEARCH #63A	WALKER	2,600 HOURS	13 MAR 75
	*PROTON-PROTON MISSING MASS #67A	SANNES	600 HOURS	8 AUG 73
	*PHOTON SEARCH #120	CLINE	1,200 HOURS	29 MAY 73
	*PARTICLE SEARCH #184	WANDERER	800 HOURS	25 MAY 74
	*PROTON-DEUTERON SCATTERING #186	MELISSINOS	450 HOURS	19 AUG 74
	*PROTON-NUCLEON INCLUSIVE #188	SANNES	1,050 HOURS	5 MAY 73
	*PROTON-PROTON INELASTIC #221	FRANZINI	950 HOURS	5 SEP 74
B. EXPERIMENTS THAT ARE IN PROGRESS (32):				
MA -M1	*TOTAL CROSS SECTION #104	BAKER	1,400 HOURS	
	PION DISSOCIATION #86A	LUBATTI	250 HOURS	
-M2	BEAM DUMP #108	AWSCHALOM	13 TARGETS EXPOSED	
	PHOTON INCLUSIVE #268	MELLEMA	750 HOURS	
	NEUTRAL HYPERON #8	PONDROM	800 HOURS	
-M3	NEUTRON BACKWARD SCATTERING #12	REAY	1,300 HOURS	
	NEUTRON DISSOCIATION #305	GOART	1,400 HOURS	
	PARTICLE SEARCH #366	ANDLINS	400 HOURS	
-M4	K ZERO REGENERATION #82	TELEGDI	2,750 HOURS	
	TEST PARTICLE SEARCH #330	GUSTAFSON	50 HOURS	
-M6	ELASTIC SCATTERING #69A	MARX	1,350 HOURS	
-OTHER	*NUCLEAR CHEMISTRY #81A	WEISFIELD	89 BOMBARDMENTS	
NA -NEUTRINO	*NEUTRINO #21A	BARISH	1,150 HOURS	
	15-FOOT NEUTRINO/H2 #45A	NEZRICK	67K PIX	
	15-FOOT ANTI-NEUTRINO/H2 #31A	DERRICK	26K PIX	
	15-FOOT EMI TEST #155	STEVENSON	14K PIX	

PAGE 2 EXPERIMENTAL PROGRAM SITUATION REPORT (CONT'D)

AREA-BEAM		SPOKESPERSON	EXTENT OF RUN TO DATE
	NEUTRINO #320	SCIULLI	500 HOURS
-15-FT	15-FOOT P - P @ 300 #343	ENGELMANN	7K PIX
	15-FOOT PI- - P @ 100 #83A	KITAGAKI	11K PIX
-30-IN	*30-INCH P - D @ 100 #194	MURPHY	41K PIX
	30-INCH P - D @ 200 #280	FIELDS	64K PIX
	*30-INCH P - D @ 300 #209	DZIERBA	55K PIX
	30-INCH PI+ - D @ 200 #295	YEKUTIELI	54K PIX
	30-INCH HYBRID #299	PLESS	158K PIX
-OTHER	*MONOPOLE #76	CARRIGAN	4 TARGETS EXPOSED
	SUPER-HEAVY ELEMENTS #142	STOUGHTON	1 TARGET EXPOSED
	SUPER-HEAVY ELEMENTS #285	LEDERMAN	2 TARGETS EXPOSED
	TACHYON MONOPOLE #202	BARTLETT	COSMIC RAY RUNNING
PA -PE	*PHOTOPRODUCTION #87A	LEE	1,750 HOURS
	*DI-MUON #358	LEE	150 HOURS
ITA-C-O	PARTICLE SEARCH #363	OLSEN	600 HOURS
	PROTON-NUCLEON INELASTIC #317	MUKHIN	300 HOURS

C. EXPERIMENTS THAT ARE IN TEST STAGE (5):

MA -M1	TEST FORM FACTOR #216	STORK	200 HOURS
-M2	TEST HADRON JETS #246	SELOVE	150 HOURS
-M6	MULTIPARTICLE #110A	PINE	50 HOURS
	HADRON JETS #260	PINE	350 HOURS
PA -PC	DI-LEPTON #288	LEDERMAN	50 HOURS

D. EXPERIMENTS BEING INSTALLED (12):

			EXTENT OF APPROVAL
MA -M1	MUON SEARCH #335	FACKLER	200 HOURS
	HADRON JETS #23AA	MOCKETT	550 HOURS
-M2	NEUTRAL MESON INCLUSIVE #350	KENNEY	400 HOURS
	PARTICLE SEARCH #357	MEYER	600 HOURS
-M3	NEUTRON ELASTIC SCATTERING #249	LONGO	400 HOURS
MA -MUON/HADRON	TEST PARTICLE SEARCH #369	KIRK	
	DI-MUON #331	PILCHER	400 HOURS
PA -PE	PHOTON TOTAL CROSS SECTION #25A	CALDWELL	600 HOURS
-PC	MUON SEARCH #48	ADAIR	200 HOURS
-PW	PHOTON SEARCH #99A	COX	400 HOURS
	PARTICLE PRODUCTION #284	WALKER	750 HOURS
	TEST PROTON-PROTON ELASTIC#177A	DREAR	100 HOURS

E. EXPERIMENTS TO BE SET UP WITHIN A YEAR (47):

MA -M1	PARTICLE SEARCH #354	KYCIA	200 HOURS
	POLARIZED SCATTERING #61	CHAMBERLAIN	800 HOURS
	INCLUSIVE SCATTERING #324	WEISBERG	500 HOURS
-M2	SUPER-HEAVY ELEMENTS #371	JURIC	
-M6	INCLUSIVE SCATTERING #118A	FRIEDMAN	600 HOURS
	BACKWARD SCATTERING #290	BAKER	900 HOURS
NA -NEUTRINO	15-FOOT NEUTRINO/H2&NE #28A	FRY	100K PIX
	15-FOOT NEUTRINO/H2 & NE #53A	BALTAY	100K PIX
	15-FOOT ANTI-NEUTRINO/H2&NE#180	NEZRICK	50K PIX
	15-FOOT ANTI-NEUTRINO/H2&NE#172	BINGHAM	50K PIX
	NEUTRINO #254	KALMELEISCH	3 X 10 TO 17TH PROTONS
	NEUTRINO #31C	CLINE	2 X 10 TO 18TH PROTONS
	PARTICLE SEARCH #247	BURHOP	
-MUON/HADRON	PARTICLE SEARCH #392	HANG	
	MUON #319	CHEN	500 HOURS
-15-FT	15-FOOT PI+/P - P @ 150 #341	KO	25K PIX
	15-FOOT PI- - PENF @ 200 #89	FRETTER	25KPIX
-30-IN	30-INCH HYBRID #281	SMITH	300K PIX
	30-INCH PBAR - P @ 30-60 #344	GUTAY	100K PIX
	30-INCH PBAR - D @ 100 #345	EKSPONG	100K PIX
-OTHER	QUARK #276	VAN GINNEKIN	
	EMULSION/NEW PARTICLES #386	LORD	
	EMULSION/PI- @ 100 #387	WILKES	
	EMULSION/PI- @ 200 #339	WOLTER	
	EMULSION/PI- @ 200 #362	JAIN	
	EMULSION/PROTONS @ 200 #271	GUTTFRIED	
	EMULSION/PROTONS @ 300 #374	DAVIS	
	EMULSION/PROTONS @ 400 #239	LORD	
	EMULSION/PROTONS @ 400 #243	NIU	
	EMULSION/PROTONS @ 400 #245	JAIN	
	EMULSION/PROTONS @ 400 #249	WOLTER	
	EMULSION/PROTONS @ 400 #251	KUSUMOTO	
	EMULSION/PROTONS @ 400 #265	YOUNG	
	EMULSION/PROTONS @ 400 #279	KING	
	EMULSION/PROTONS @ 400 #292	GUTTFRIED	
	EMULSION/PROTONS @ 400 #329	TRETJAKOVA	
	EMULSION/PROTONS @ 400 #336	OGATA	
	EMULSION/PROTONS @ 400 #364	SACTON	
	EMULSION/PROTONS @ 400 #365	EKSPONG	
	EMULSION/PROTONS @ 400 #385	PRAKASH	
PA -PE	PARTICLE SEARCH #300	CRONIN	600 HOURS
	DI-MUON #325	CRONIN	SEE EXP #300
	EMULSION/ELECTRONS @ HI E #340	DAKE	
ITA-C-O	PROTON-PROTON INELASTIC #321	LEE-FRANZINI	800 HOURS
	PROTON-NUCLEON SCATTERING #108A	OLSEN	800 HOURS
	PROTON-PROTON POLARIZATION #313	NEAL	1,000 HOURS
	PROTON-NUCLEON SCATTERING #381	MALAMUD	300 HOURS

F. OTHER APPROVED EXPERIMENTS (20):

MA -M2	CHARGED HYPERON #97	LACH	400 HOURS
-M4	K-SHORT-K REGENERATION #226	TELEGDI	500 HOURS
-M6	ASSOCIATED PRODUCTION #99	RITSON	500 HOURS
NA -NEUTRINO	NEUTRINO #356	BARISH	2 X 10 TO 18TH PROTONS
-MUON/HADRON	MUON #203A	STROVINK	1 X 10 TO 18TH PROTONS
-15-FT	PARTICLE SEARCH #379	WOJCICKI	200 HOURS
-30-IN	30-INCH P - D @ 400 #196	ENGELMANN	100K PIX
	30-INCH PI- - D @ 400 #338	MORIYASU	50K PIX
	30-INCH P-P @ 400 #138	VANDER VELDE	50K PIX
	30-INCH PI- - P @ HI E #215	GOLDHABER	100K PIX

PAGE 3 EXPERIMENTAL PROGRAM SITUATION REPORT (CONT'D)

AREA-BEAM		SPOKESPERSON	EXTENT OF APPROVAL
	30-INCH PI+ - P @ 300 #277	BARNES	100K PIX
	30-INCH P - P @ 500 #207	ENGELMANN	50K PIX
-OTHER	DETECTOR DEVELOPMENT #206	PETERSON	
	DETECTOR DEVELOPMENT #32	HOFSTADTER	100 HOURS
PA -PE	PHOTOPRODUCTION #152B	HEUSCH	350 HOURS
	PHI PHOTOPRODUCTION #263	CHEN	600 HOURS
-PW	PION INCLUSIVE #258	PIRQUE	800 HOURS
	C-TEST #302	CESTER-REGGE	400 HOURS
	MULTIGAMMA #192	GUIRAGOSSIAN	400 HOURS
ITA-C-0	PROTON-HELIUM SCATTERING #289	MALAMUD	700 HOURS

****

PROPOSALS BEING CONSIDERED (511):			EXTENT OF REQUEST
MA -M1	HADRON DISSOCIATION #272	FERREL	600 HOURS
-M2	K-SHORT REGENERATION #351	ARONSON	3,000 HOURS
	CHARGED HYPERON #353	ECKLUND	600 HOURS
	LAMBDA BETA DECAY #361	MARCH	250 HOURS
-M4	K-SHORT INCLUSIVE #383	KOHRAK	500 HOURS
-M6	INELASTIC SCATTERING #165	RITSON	475 HOURS
	HADRON DISSOCIATION #312	EDELSTEIN	1,000 HOURS
NA -NEUTRINO	15-FOOT ANTI-NEUTRINO/H2 #93	STEVENSON	300K PIX
	15-FOOT NEUTRINO/D2-NE #42A	GARFINKEL	650K PIX
	15-FOOT NEUTRINO/D2-NE #44A	ROE	750K PIX
	15-FOOT NEUTRINO/D2 #151A	SNOW	300K PIX
	15-FOOT NEUTRINO/D2 #227	ENGELMANN	300K PIX
	NEUTRINO #256	OSBORNE	
	15-FOOT ANTI- & NEUTRINO/D2#270	OSBORNE	1,000K PIX
	15-FOOT ANTI-NEUTRINO/D2 #294	ROE	500K PIX
	NEUTRINO #316	NYGREN	
	15-FOOT ANTI-&NEUTRINO/NEH2#352	STEVENSON	400K PIX
	NEUTRINO #355	BARISH	1,400 HOURS
	TEST NEUTRINO #370	CLINE	1 X 10 TO 18TH PROTONS
	15-FOOT NEUTRINO/H2 & NE #380	BALTAY	200K PIX
-MUON/HADRON	MUON #225	CHEN	2,000 HOURS
	PION DISSOCIATION #318	ASCOLI	400 HOURS
	MUON #348	WILSON	400 HOURS
	MUON #349	KIRK	600 HOURS
	EMULSION/MUONS @ 50-100 #373	JAIN	
-15-FT	15-FOOT PI+ - D @ 40 #85	GUTAY	600K PIX
	15-FOOT PHOTON - P @20-250 #145	WALKER	250K PIX
	15-FOOT K+ - P @ HI E #179	ERWIN	300K PIX
	15-FOOT P - P @ > OR = 300 #208	TAKIBAEV	75K PIX
	15-FOOT SIGMA- - P @ 50-200#214	RUSHBROOKE	275K PIX
	15-FOOT PI- -P @ 100 #267	MORRISON	100K PIX
	15-FOOT P - P&NE @ 100&400 #291	VOYVODIC	30K PIX
	15-FOOT NEUTRON - P950-250 #303	SEIDL	100K PIX
	15-FOOT PI- - P/NE @ 485 #309	ERWIN	250K PIX
	15-FOOT K- - P @ 200 #333	RUSHBROOKE	100K PIX
	15-FOOT K+ - P @ 220 #334	RUSHBROOKE	100K PIX
	15-FOOT PI- -P/NE @ 200 #342	KENNEY	210K PIX
	15-FOOT PI- - P2 > OR = 250#384	HUSON	300K PIX
-30-IN	30-INCH P&PI- - HI Z @ 200 #224	JONES	100K PIX
	30-INCH P - P&NE @100-500 #273	ORFN	50K PIX
	30-INCH P&PI- - P&NE @200 #298	MALHOTRA	15K PIX
	30-INCH PI- - HIZ @ 200 #304	WALKER	100K PIX
	30-INCH K+ - P @ 1.0 #375	RUBIN	400K PIX
	30-INCH K- - P @ 150 #376	LUSLAM	400K PIX
	30-INCH PI- - P @ 300 #377	HAFEN	200K PIX
	30-INCH PI- - P @ 75 #378	YAMAMOTO	200K PIX
PA -PW	ELASTIC SCATTERING #301	GETTNER	1,000 HOURS
	PI-MUON #326	PIRQUE	SEE EXP #258
	ELASTIC SCATTERING #347	WALKER	1,200 HOURS
	K-LONG INCLUSIVE #360	NAUENBERG	1,000 HOURS
	PARTICLE SEARCH #372	BECKER	1,400 HOURS

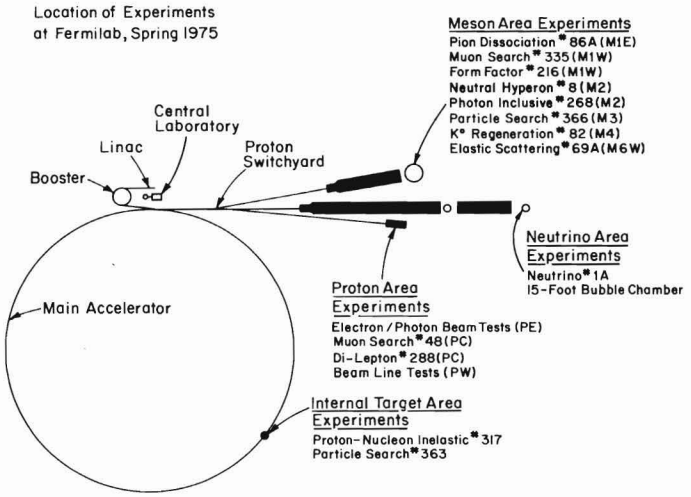

FACILITY UTILIZATION SUMMARY--MARCH 1975

As in February, the March high energy physics research program was accomplished in two parts, namely, with sixteen days of 380 GeV operation followed by fifteen days of running at 300 GeV. The first part was an extension of the work begun on February 17 with slow and fast extracted beam delivered to the Proton and Neutrino Areas, respectively. Accelerator reliability remained good during the last half of the 380 GeV run with 257 of the 336 hours of beam time scheduled for high energy physics research work actually delivered.

The switch to 300-GeV accelerator operation, with an eight-second cycle period and half-second flattop to reduce electrical power consumption, was accomplished in less than two shifts. The Neutrino Area program was continued for several more days and the Meson Area was brought back into operation, while the Proton Area was shut down. A number of problems, many of which were directly or indirectly caused by several series of voltage surges on the incoming power lines as the result of wind and ice storms during the last week of March, limited overall operating efficiency to 71% during the last half of the month.

In Proton-East, Photoproduction #87A/Di-Muon #358 experimenters continued and completed their current run, taking data at 380 GeV. Photoproduction data (#87A) were collected early in March. The deuterium filter was then emptied for the last five days of the run so that neutron-produced events (#358) could be studied. Low intensity beam was also split into Proton-Center for some initial testing by Di-Lepton #288 during the last

weekend of operation. The Proton Area was shut down at the end of the 380-GeV run for installation of the beam splitting stations in Enclosures E and H and preparation of the Proton-East line for electron/photon beam operation.

Once 300-GeV extracted beam had been established, the Meson Area started up with a full program. Nine experimenter groups, seven of which were carry-overs from the February run, were in various stages of setup in the five secondary beamlines. By the end of March six groups (five carry-overs) were tuned up and taking data, including Photon Inclusive #268 - doing a heavy particle search, Particle Search #366, K^0 Regeneration #82, Elastic Scattering #69A, Pion Dissociation #86A, and Test Hadron Jets #246. In addition, Particle Search #330, Neutron Dissociation #305 and Hadron Jets #260 used beam to do some testing and collect preliminary data for setup purposes, and Nuclear Chemistry #81A parasitically bombarded four more targets in Meshall using their remotely operated target positioning equipment.

In the Neutrino Area, the Neutrino #370 group used the available 380-GeV high intensity fast/slow-spilled beam (~1 msec) on the triplet target train to collect data on high-energy neutrino interactions, looking principally at di-muon events. This work was continued after the change to 300-GeV operation, but had to be suspended three days before the planned shutdown of the area for installation of the two-horn trainload because of a water leak in the beam dump. At the same time the 15' bubble chamber had been filled with liquid hydrogen and brought into operation with the new plastic piston. After several days of shakedown tests and beam tuneup, the chamber and magnet were brought into operation using bypass beam only.

After some 3,000 test pictures had been taken using the incident hadron beam, over 11,000 pictures were taken for the 15' π^--p at 100 GeV #83A experiment, with the magnetic field at ~26 kG. Earlier in the month, low intensity slow spilled beam at 380-GeV was brought into the bypass for two separate short periods of lead-glass counter tests by Photon Search #63A in Enclosure 105. Prior to failure of the beam dump cooling water system, Neutrino #310 also used several shifts of low intensity slow spill running on the triplet target load to test their "gamma catchers" before final installation at Lab C. The Neutrino Area was off for the entire last week of March to make repairs and install the two-horn system. During that time, the 15' chamber was emptied and refilled with an approximately 25%-75% neon-hydrogen mixture in preparation for neutrino running.

In the Internal Target Area, running time continued to be assigned on alternate weeks to Proton-nucleon Inelastic #317 and Particle Search #363. These groups worked during the evening and owl shifts and on weekends, to accommodate the continuing C-0 area construction work. Experiment #317 used the hydrogen gas jet mainly to conduct background measurements and check equipment in preparation for data taking, while the #363 group continued collecting data for a charmed particle search using the upstream rotating target and a modified double arm spectrometer.

The summary of the accelerator and beam utilization for the month of March follows:

I. Summary of Accelerator Operations

	Hours @380 GeV	Hours @300 GeV	Total
A. Accelerator use for physics research			
Accelerator physics research	25	27	52
High energy physics research	257	192	449
Research during other use	(14)	(2)	(16)
Subtotals	282	219	501
B. Other activities			
Accelerator setup and tuning to experimental areas	5	11	16
Scheduled interruption	22	30	52
Unscheduled interruption	83	92	175
Subtotals	110	133	243
C. Unmanned time			
Total	392	352	744

II. Summaries of High Energy Physics Research Use

	No. of Expts.	Hours	Results
A. Counter experiments	18	2094	
B. Bubble chamber experiments	1	31	11,113 pictures
C. Emulsion experiments	0	-	
D. Special target experiments	1	-	1 target
E. Test experiments	0	-	
F. Engineering studies and tests	1	52	3050 pictures
G. Other beam use	-	125	Beam tuning & tests
	21	2302	

III. Number of Protons Accelerated and Delivered ($\times 10^{18}$)

	@380 GeV	@300 GeV	Total
A. Beam accelerated in main ring	0.558	0.490	1.048
B. Beam delivered to experimental areas			
Meson Area	0.000	0.294	0.294
Neutrino Area			
Main beam	0.528	0.132	0.660
Bubble chamber beam (estimated)	0.003	0.002	0.005
Proton Area	0.021	0.000	0.021
Total	0.552	0.428	0.980

IV. Beam Utilization by Experiment

	Hours	
A. Meson Area		
Elastic Scattering #69A	99.5	
Nuclear Chemistry #81A	-	4 targets
K^o Regeneration #82	147.0	
Pion Dissociation #86A	131.3	
Test Hadron Jets #246	91.6	Tests
Hadron Jets #260	4.0	
Photon Inclusive #268	167.2	
Neutron Dissociation #305	119.4	
Particle Search #330	23.0	
Particle Search #366	149.5	
B. Neutrino Area		
Photon Search #63A	20.9	
Tachyon Monopole #202	-	Cosmic ray running
Neutrino #310	182.2	Tests
Neutrino #370	289.0	$\sim 6.5 \times 10^{17}$ protons
15' π^--p @ 100 GeV #83A	30.8	11,113 pictures
C. Proton Area		
Photoproduction #87A/	157.3	
Di-Muon #358	98.2	
Di-Lepton #288	44.7	Tests
D. Internal Target Area		
Proton-Nucleon Inelastic #317	171.9	Tests
Particle Search #363	197.4	
Total	2124.9	

PROPOSALS RECEIVED DURING FEBRUARY AND MARCH 1975

No.	Title	Submitted By
375	Studies of K^+-Meson Collisions with Protons at an Incident Momentum Close to 150 GeV/c	H. A. Rubin
376	Studies of K^--Meson Collisions with Protons at an Incident Momentum Close to 150 GeV/c	T. W. Ludlam
377	A Precision Study of Leading Particle and Diffractive Effects in π^-p Interactions at 300 GeV/c	E. S. Hafen
378	A Proposal to Study Leading Particle Production in π^-p Interactions at 75 GeV/c	R. Yamamoto
379	Search for Short Lived States Decaying Weakly via Leptonic Modes	S. Wojcicki
380	Study of the Properties of Weak Neutral Currents in the Interactions of a Narrow Band Neutrino Beam in Liquid Neon	C. Baltay
381	Measurement of the Real Part of the p-n and p-p Forward Scattering Amplitudes; Production of Low Mass Isobars in the Very Small Momentum Transfer Region	E. Malamud
382	A Search for Charmed Hadrons Produced by Muon Deep Inelastic Scattering in Tagged Nuclear Emulsions	L. Hand
383	A Proposal to Study the Inclusive Production of K_S^o by K^- on Hydrogen	H. G. E. Kobrak
384	Proposal to Study π^-p Interactions at Highest Energy in the Fermilab 15' Bubble Chamber	F. R. Huson
385	Proposal for Exposure of a Stack of Nuclear Emulsions to Protons of 400 GeV/c	Y. Prakash
386	A Search for Low Energy Neutral Particles and Particle Interactions Involving Small Energy Exchanges in the Neutrino Beam	J. Lord
387	100 to 300 GeV Pion Interactions in Emulsion and Heavy Element Targets	R. Wilkes

DATES TO REMEMBER

May 9-10, 1975	Fermilab Workshop on Ionization Calorimeters. Contact M. Atac, Research Services Department (Ext. 3960) for more information.
May 21, 1975	Deadline for receipt of materials to be considered at the summer meeting of the Fermilab Program Advisory Committee.
May 29-30, 1975	Meeting of the PAC Bubble Chamber Subcommittee on Neutrino Experiments.
June 14, 1975	Fermilab Auditorium Arts Series: The Edwardians. Tickets available in Guest Office.
June 21-27, 1975	Summer meeting of the Fermilab Program Advisory Committee.