NALREP

c.3

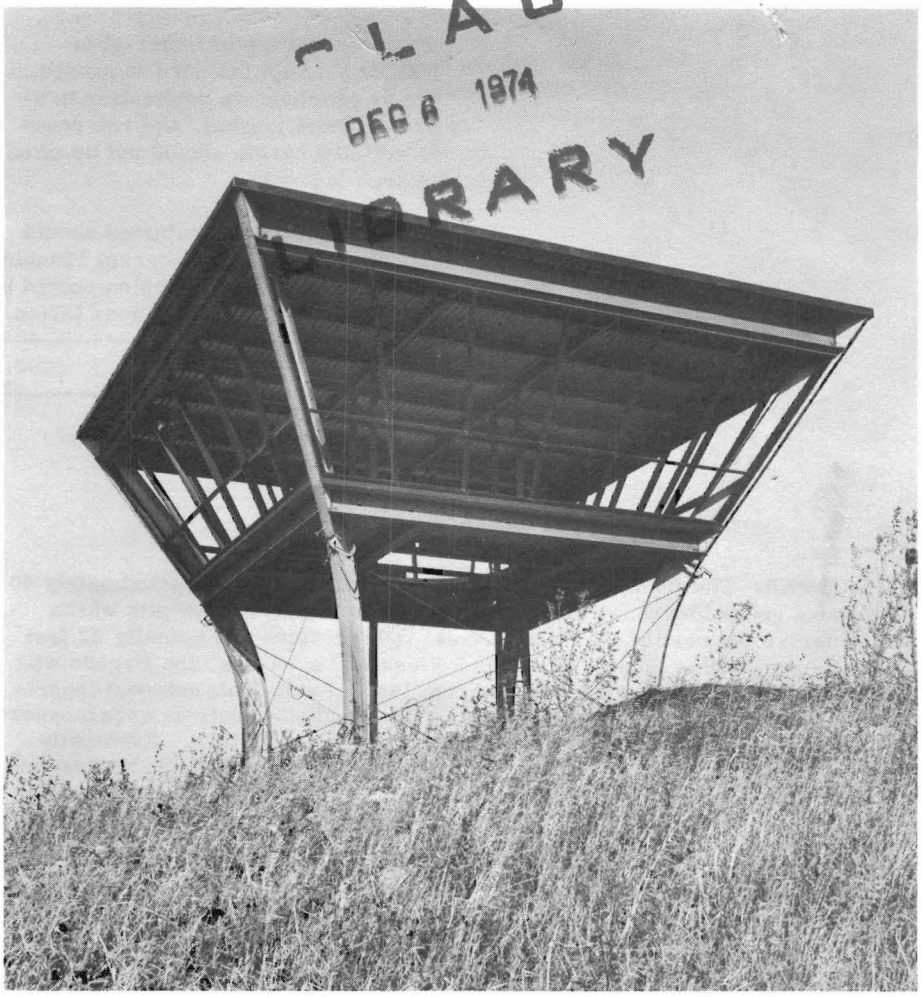

SLAC
DEC 6 1974
LIBRARY

Monthly Report of the Fermi National Accelerator Laboratory November 1974

Fermi National Accelerator Laboratory

NALREP is published monthly by the Fermi National Accelerator Laboratory, P. O. Box 500, Batavia, Illinois 60510.

J. R. Sanford, Editor
N. Stiening, Assistant Editor

The presentation of material in NALREP is not intended to substitute for or preclude its publication in a professional journal, and reference to articles herein should not be cited in such journals.

Contributions and comments should be addressed to the Program Planning Office. Requests for copies should be addressed to the Publications Office.

FERMILAB-74/12 0090.01

THE COVER: The framework for the Proton Pagoda rises approximately 40 feet above ground level, in sharp contrast to the subterranean pits which characterize the rest of the Proton Area. (Beam lines are actually 22 feet below ground at this point.) Still windowless and stairless, the Pagoda will be the control center for the Proton Area, last of Fermilab's external experimental areas to become fully operational. This month the controls were moved to the basement of the structure from their temporary quarters. Eventually, only instrumentation and power supplies will be in the basement; the control console will be moved to the second floor.

Operated by Universities Research Association Inc. Under Contract with the United States Atomic Energy Commission

CONTENTS NOVEMBER 1974

The Proton Area 1

Notes and Announcements 18

More Details on the Future Muon Program Workshop. . . 18

Users Center Hours Extended. . . 18

Dial HACK. . . 19

Facility Utilization Summary -- October 1974 20

Manuscripts and Notes Prepared During September and October 1974 25

Dates to Remember

THE PROTON AREA

The order in which Fermilab's external experimental areas were constructed was determined largely as a result of the 1968 and 1969 Summer Studies. Out of these studies grew the blueprints for the Meson and Neutrino Areas, based on suggestions for continuations of physics research done at lower energies at other accelerators. When the first call for proposals went out in 1970, it was only natural that most of those received be planned around facilities which were being implemented in the Neutrino and Meson Areas.

However, there were some proposals which did not fit conveniently into these plans. Some were for experiments and facilities which had never been discussed before--for example, the study of lepton production in hadron collisions and the construction of a broad band photon beam. Other proposals were to study electron and photon physics using a tagged photon beam. Although such a beam had been mentioned, it had been dropped because there seemed to be no way to include it conveniently in one of the two areas already planned. These proposed experiments and facilities promised very interesting and timely physics, and the groups that suggested them pressed their case vigorously. As a result, the Proton Area was born.

The types of experiments for which the Proton Area was designed included the following:

--Production of large transverse momentum collisions. All of these experiments proposed to look at lepton production as either an important subsidiary measurement (Particle Search #100A) or as their sole objective (Muon Search #48 and Lepton #70).

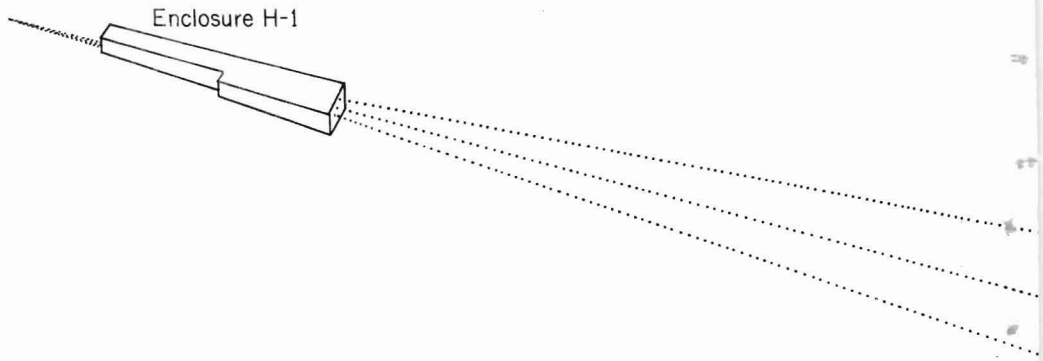

Diagram showing the upstream half of the Proton Area.

--Measurement of large transverse momentum secondaries in proton-proton collisions. Two of these experiments were to be inclusive measurements of charged hadrons (Particle Production #284) and gamma rays (Photon Search #95A). A third was the study of large angle elastic proton-proton scattering.

--Photoproduction experiments. Photoproduction #87A was designed to measure vector meson and lepton pair production. Experiment #25A was designed to measure the total photon cross section. While the experiments are conventional, the beams were incompatible with the multi-user target concept developed in the Meson Area.

The common thread which runs through these diverse experiments was the need for a proton beam which could be varied over a substantial range of intensity and tuned over a variety of spot sizes.

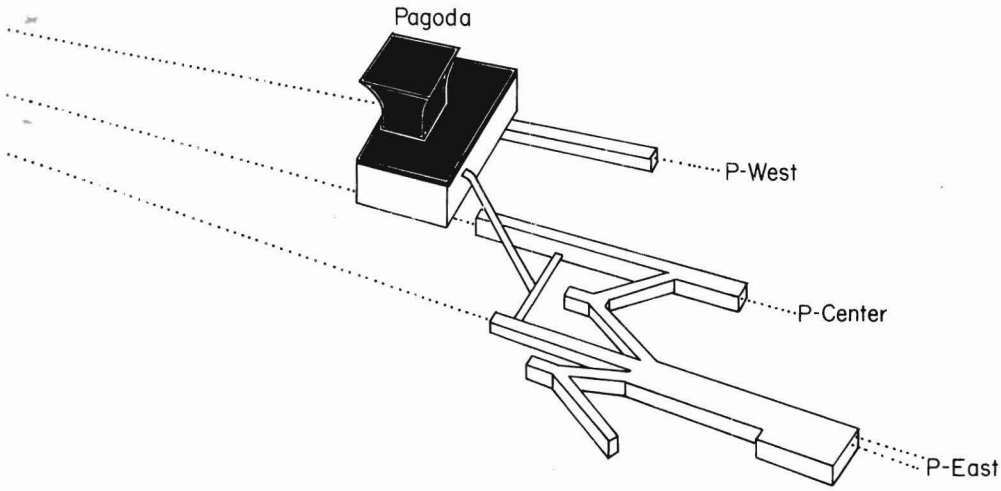

Measurements have been made with as few as 10^9 protons per pulse and as many as 5×10^{12} protons per pulse, and spot sizes from 0.016- by 0.100-inch to 0.030- by 0.040-inch. In these experiments the choice of parameters was a critical one, and no compromise was possible.

From these requirements the decision was made to organize the Proton Area around three independent target stations. It was decided also that the primary beam lines to the Proton Area would be capable of transporting 500-GeV protons, and that the beam lines would be about 12 feet below ground level in order to use the earth for shielding. By the beginning of 1971, the choice had been made to locate the detector stations near

Batavia Road. A diagram of the first portion of the Proton Area is shown on pages 2 and 3. At that time it was envisaged that only one of the three branches would take beam at any one time. For that reason only one pair of dipole magnets was needed at the upstream end of the beam enclosure (H) to direct the beam into one of the three branches. If these dipoles were turned off, the beam went straight ahead to the P-Center branch; if they were powered the beam could go either to the East or to the West branch, depending upon the polarity.

The angle between each adjacent pair of beams is approximately 25 mrad. Since a transverse separation of 40 to 50 feet allowed enough earth for shielding between the target halls to permit independent access, these target halls were located 2000 feet downstream of Enclosure H. The remaining choices such as the design of the experimental enclosures and the details of the beam were made and revised as the construction progressed. An important later revision was the decision to use a splitting station and thereby permit simultaneous operation of more than one branch.

The transport of the Proton beam to the Proton Area was described in the May issue of NALREP. A brief redescription of the beam transport after Enclosure E of the Switchyard is in order, since the Proton Department has made a substantial number of changes in Enclosure H and downstream. In Enclosure E the beam is split vertically into three components by a set of electrostatic septa. The three beams, stacked one on top of the other, are transmitted through a common set of magnets to Enclosure H in the Proton Area.

In Enclosure H a novel variation of the Lambertson magnetic septum deflects the upper beam to the west and the lower beam to the east; the center beam is undeflected. A picture of a lamination for the magnet is shown below. After the beams are separated horizontally by these magnets, additional dipole magnets in each branch provide the final horizontal deflection into the target halls, 2000 feet downstream.

Once a beam enters a target hall it is focused by a quadrupole doublet onto a target to provide the spot size and divergence appropriate to a particular experiment. In addition to the horizontal dipoles in Enclosure H, each branch has a vertical trim magnet in Enclosure H and horizontal and vertical trim magnets in the target hall. The magnets in Enclosure H and the target hall are controlled by the experimenters through the Proton Area computer. The relative intensity in each branch is controlled by changing the splitting ratios in Enclosure E. It has been possible to achieve split ratios as large as one thousand to one.

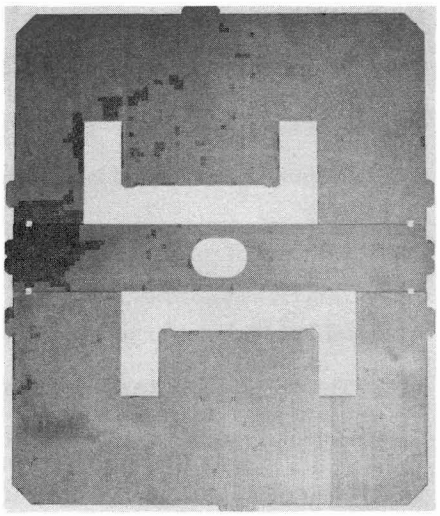

Photograph of the lamination for the magnet used for the three-way splitting of the beam in Enclosure H of the Proton Area.

The target systems are quite different from those which were developed in the Meson and Neutrino Areas. The components for the systems in Proton-Center and Proton-East are placed inside a steel box which is 15 inches high and 60 inches across; the depth of the box in the direction of the incident proton beam is 22 feet in P-Center and 44 feet in P-East. A view of the inside of the P-Center target box is shown on page 7. Each box contains five sets of two parallel rails. The center line of each pair is displaced by 12 inches from the center line of the neighboring pair. The components, which may be as simple as a block of steel or as complicated as a set of magnets, are mounted on steel plates which slide along the rails on 20 roller bearings. Each plate, known as a drawer, is 11/34-inches wide and 1-inch thick. The length of the plates varies from 9 to 22 feet. Each target box contains ten drawers, five upstream and five downstream.

The most complicated set of drawers built thus far is the one used for the broad-band photon beam, which is also shown on page 7. The upstream drawer contains the proton target, two bending magnets, and two coaxial ionization counters. The downstream drawer contains a third bending magnet, a 3-foot long water-cooled beam dump which absorbs most of the beam power, and a magnetized iron-beam dump which attenuates the degraded hadron cascade further and deflects muons away from the undeflected beam line. An almost identical set of drawers has been constructed for the tagged photon beam.

The targeting of the proton beam causes these components to become very radioactive. Since the magnets and instrumentation which are immediately upstream and downstream of the target box may require some service during

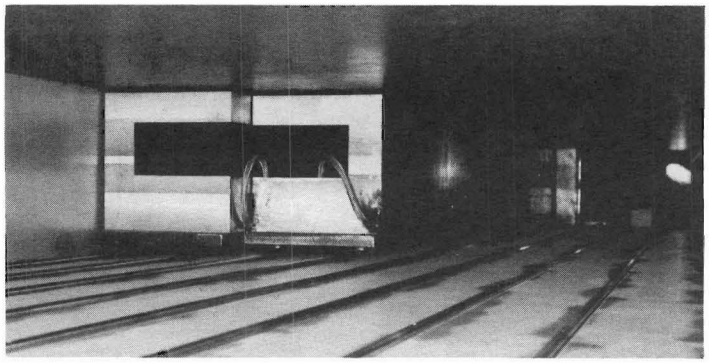

The Proton-Center target drawer.

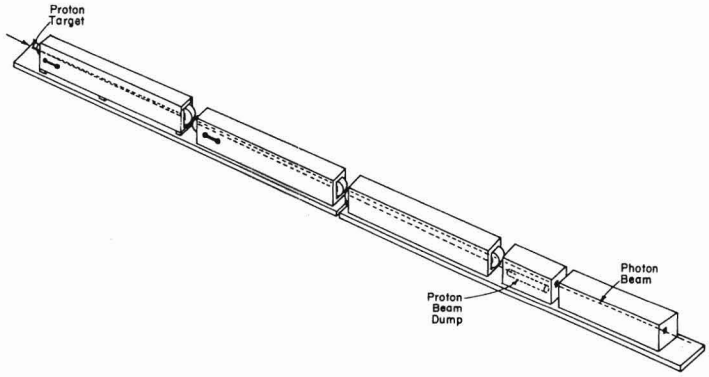

Target drawers for the broad-band photon beam.

an experiment and since they must be moved whenever the experiments are changed, people must be shielded from the contents of the target box. Therefore, the target box is surrounded with a belt of steel which is 36- to 30-inches thick. The upstream end of the upstream drawers and the downstream end of the downstream drawers are finished with marble blocks 18- to 24-inches deep in order to protect workers when they change the connections at the ends of the target box.

Fortunately it is not necessary to have ten new drawers for each experiment since most of the drawers are simple blocks of steel on rollers. These drawers are moved from one location to another as required by experimental groups. Typically there are two to four drawers which have special components such as magnets and collimators. Drawers which are unique to an experiment are designed by the experimenters, together with the Proton Department engineering staff.

In Proton-East and Proton-Center, the proton target is viewed by the experimenter's detectors only through channels in the target system. As a result, the massive shielding associated with the target box shields the experimenter's detectors from extraneous beam interactions on the upstream magnets. This is not the case in P-West. As will be discussed later, it was this distinction which allowed experiments to start in the East and Center branches but not in the West branch.

A diagram of the experimental enclosures is shown on pages 10 and 11. The Pagoda stands astride the three beam lines as they enter the target halls. The lower level serves as a service building containing power supplies and

mechanical equipment. For the time being it also houses the control room. Eventually the control room will be in the tower.

Directly north of the Pagoda is the P-Central pit. The first proton beam was delivered to this area in September, 1972, before roofs or stairs existed. The pit was designed for Lepton #70 and its many phases. The walls consist of sheet piling and the roof of galvanized drainage pipe. The principal inhabitants are cheerful sparrows. The hall is 250-feet long and has an average width of 35 feet. The hall becomes larger as one proceeds north (downstream). The target box is located immediately upstream of the south wall of the pit.

The area could serve as a hyperon beam station at some time in the future. It is possible to target proton intensities as small as 10^9 protons per pulse, which are comparable to the fluxes expected in the diffracted proton beam in the Meson Area M2 beam. Much higher intensities are normally used in lepton experiments. There are no plans to construct secondary beams from the P-Central target station, since the plans for the development of P-East and P-West would preclude such expansion.

The Proton-East branch contains three secondary beam lines which are enclosed in a sequence of underground pits which terminate in the Tagged Photon Laboratory. Proceeding from east to west there is a 77-mrad beam line, which was used by Particle Search #100A to measure particle production at large transverse momentum; a broad-band photon beam which is being used by Photoproduction #87A to measure photoproduction of vector mesons and lepton pairs; and a tagged photon beam which will be used initially by Experiment #25A to measure the photon total cross section. These last two beam

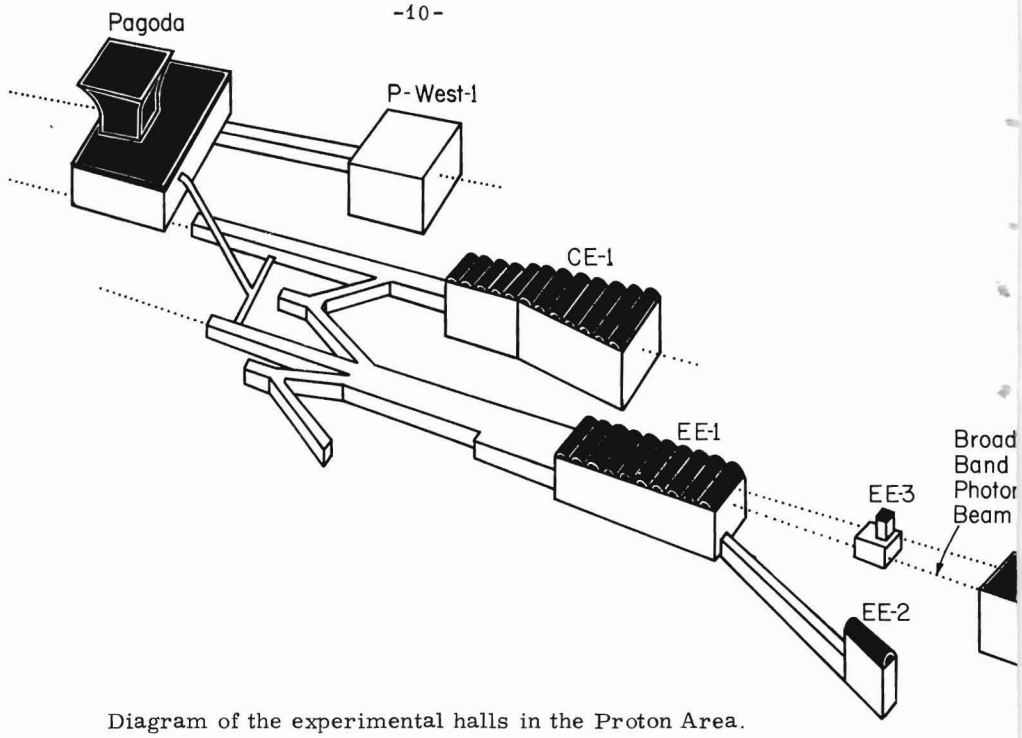

Diagram of the experimental halls in the Proton Area.

lines were grafted onto the plans of P-East in the fall of 1971 when the decisions to approve these projects were made. Only one of these beam lines can be operated at a time, since each has a separate target and drawers, and each requires different manipulation of the beam by the pretarget magnets.

The 77-mrad beam line is quite simple, as it contains a single doublet consisting of four main-ring quadrupoles, and two main-ring dipoles for momentum selection. The maximum beam energy is 200 GeV, the acceptance is 17 msr, and the momentum spread is 8%. Particle Search #100A and its beam were described in the November 1973 NALREP. While this experiment is complete, the same group will extend their measurements to H_2 and D_2 targets as Particle Search #300. Once this work is completed, the beam will be dismantled.

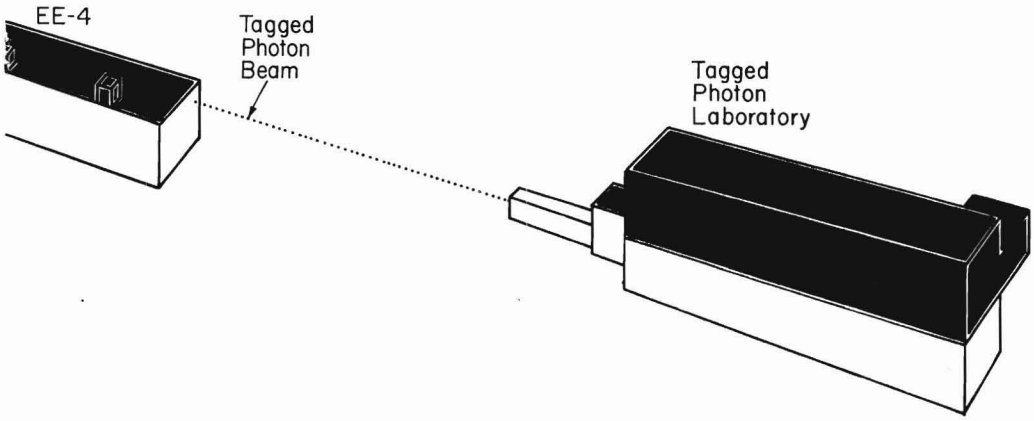

The broad-band photon beam was operated for the first time in August 1974 as a photon beam. The principle of the beam is quite simple. A neutral beam is first formed by targeting protons on a 12-inch long beryllium target. The charged secondaries and the uninteracted protons are swept away from 0°, and are absorbed in a beam dump. A 1/2-inch hole in the dump, along the 0° line permits the neutral particles to go downstream.

A beam-defining collimator, which is located 55 feet from the target, consists of an iron block 5 feet long, containing five rectangular holes. The holes vary in size from 0.040- by 0.040-inch up to 0.320- by 0.80-inch. One hundred feet from the target there is a second collimator of the same type which absorbs the halo produced by interactions on the surface of the first collimator. Without purification, the principal component of the beam would be neutrons, which are in far too great an abundance to do photoproduction experiments.

The beam is made into a photon beam by allowing it to traverse 103 feet of liquid deuterium. Since the mean free path of a photon in deuterium is greater than that of a neutron, the neutrons interact 400 times more often than the photons, and are removed from the beam.

The deuterium is contained in two long, thin tubes--the first is 35 feet long and the second is 68 feet long. These tubes are mounted between the pole tips of a string of 10-foot long magnets to remove charged particles. The 6-kG magnetic field is strong enough to sweep the electron pairs, which are made by the photon interactions in the deuterium, away from the beam line before they have a chance to radiate a significant number of low-energy photons.

The third beam in Proton-East is the tagged photon beam. Like the broad-band beam, the components in the target box form a neutral beam from the interactions of protons on a beryllium target. The target system is almost identical to the broad-band beam. After the neutral beam emerges from the target box it intercepts a lead radiator. The photons make electron pairs in the radiator, while the more copious neutrons make charged pions.

The electron pairs acquire a transverse momentum relative to the parent photon of about 10 MeV/c as a result of the production process and multiple scattering. The average transverse momentum which the charged pions acquired relative to the parent neutron is 300 MeV/c. As a result, the electrons appear to emerge from an effective source which is much smaller than the effective source of the pions.

The charged particles produced in the radiator are then transported through a conventional two-stage beam into the Tagged Photon Laboratory. A quadrupole doublet located in EE1 focuses the charged particles to an image of the target on collimators located in EE4. Since the particles are dispersed due to a 20-mrad bend located in EE1, the opening of the horizontal collimator in EE4 defines the momentum interval, which is typically ±2%. The vertical collimator removes the majority of the pions since the vertical image is small only for the electrons. The purified electron beam is refocused onto the experimental detectors by another doublet in the Tagged Photon Laboratory. Bending magnets in the Tagged Photon Laboratory and EE4 make a dispersion-free image at the experimenter's target or detector.

When the electrons traverse the tagging radiator, a thin sheet of lead located just downstream of the quadrupoles and dipoles in the Tagged Photon Laboratory, some will emit a high energy photon in the same direction as the original electron. The electron which has lost much of its energy can then be deflected by a set of magnets into a counter hodoscope, like that shown on page 14. The momentum of the electron is measured by its position in the hodoscope array. Since each element of the array consists in part of a lead glass total absorption counter, the electron energy is

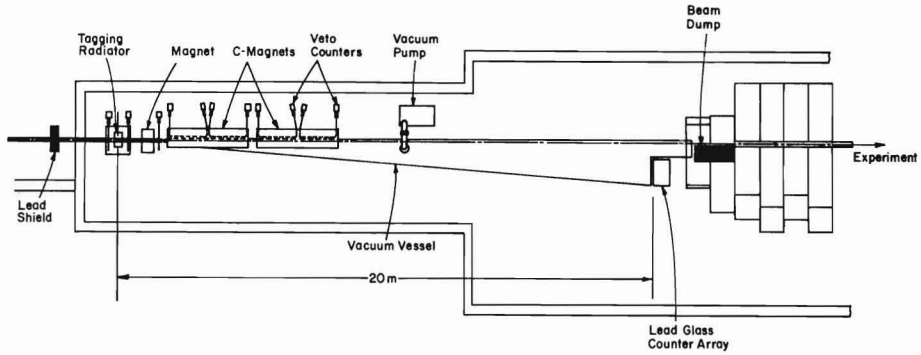

The tagging system for the tagged photon beam in Proton-East beam line.

measured independently of the momentum. The comparison of the two measurements makes it possible to reduce the pion background still further. The momentum of the photon which was emitted in the radiator is the difference between the beam energy and the energy of the electron detected in the tagging system. Electrons which do not interact are deflected into a dump, while the tagged photons go on towards the experiment. The target system and the first stage of the beam were successfully tested this fall. The completion of the beam and the tagging system are expected after the first of the year, when the Tagged Photon Laboratory is completed. The beam has been designed to operate at a maximum energy of 300 GeV. Relatively simple modifications make it possible to raise the energy still higher. A negative pion beam can be made by changing the pretarget and target box magnet currents. The beam can be operated as a positive pion beam with a different set of target drawers and a different beam dump.

Proton West was designed primarily for the study of proton-proton and proton-deuterium interactions. P-West-1 contains a transmission target and several spectrometer arms which point at the target. This enclosure is an underground vault located just downstream of the P-West pretarget beam tunnel. The layout of the spectrometer arms is shown on page 16. One arm is the half-quadrupole magnetic spectrometer which was used for many years at the Cambridge Electron Accelerator. It can measure the momenta of charged particles up to 2.4 GeV/c. Cerenkov counters will be mounted on this arm so that the inclusive spectra of pions, kaons, and protons can be measured by Particle Production #284. Two more arms were constructed by Photon Search #95A in order to look at gamma rays emerging from proton-proton collisions. Each arm consists of a small dipole magnet and a lead-glass hodoscope.

Just beyond P-West-1, the beam line tunnel has a fork. The stub was constructed to make it possible to do large momentum transfer elastic proton-proton scattering by the coincidence technique. The magnets and detectors to measure the recoil particle momentum will be located in the small stub while the scattered particle magnets and detector will be located in an extension of the beam tunnel.

These target stations have the following features in common: both use a thin hydrogen target in which only a small percentage of the beam interacts, the detectors in both target stations are placed very close to the target, and the detectors are not shielded from the spray of particles which is created if the proton beam strikes any structures upstream of the targets.

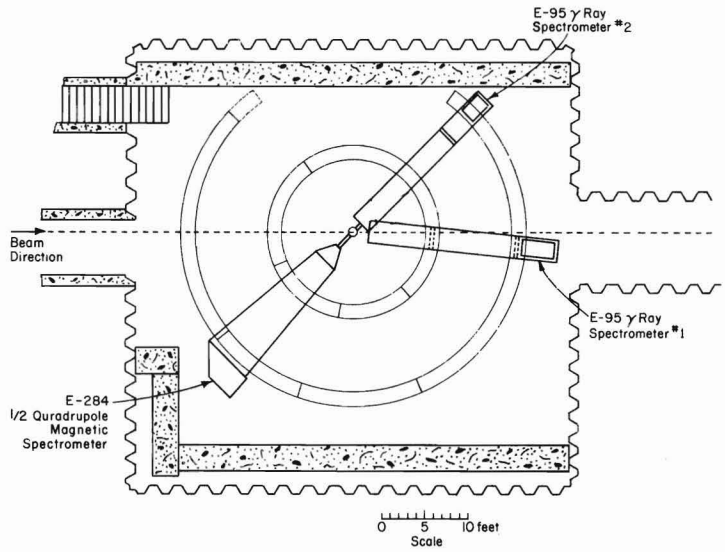

Spectrometer array in the Proton-West beam branch.

Quadrupole enclosures, three new beam line enclosures which are under construction in P-West, will make it possible to add additional quadrupole lenses and collimators. These components will reduce the emittance of the beam and match the beam to the acceptance of the pretarget magnets, so that it will go through them without loss. Construction of the enclosures should be complete by early 1975.

At first, the proton beam which is transmitted through these targets will be absorbed into a dump in P-West-2. Later, there will be a station for the nuclear chemists to study the production of short lived isotopes. Further into the future, there is a plan to construct a new target station somewhat like the one in Proton East. It would be the source of a high intensity pion beam and a medium intensity pion beam. The disappearance

of construction funds makes it difficult to predict when such a project will be started.

The Proton Area has been in operation for only a little over a year and a half. In one way or another, all of the petitioners for its creation assisted in the design and construction. In its brief operating life, the results of experiments using 400, 300, and 200 GeV protons have been reported. These early experiments have provided a number of surprises. The unusually high yield of heavy particles relative to pi-mesons at large transverse momenta and the high yield of direct produced leptons were unexpected. The measurement of directly produced lepton pairs which are being carried out now by several groups in the Proton Area may yield still more surprises. Finally, the photon beams should tell us whether electrodynamics has new wrinkles above 100 GeV.

Reported by J. Peoples

NOTES AND ANNOUNCEMENTS

MORE DETAILS ON THE FUTURE MUON PROGRAM WORKSHOP. . .

Representatives of groups having proposals concerning muons and other interested persons are invited to participate in the Future Muon Program Workshop, to be held at the Laboratory on Friday, January 17, 1975. Since the original announcement of this workshop in the October issue of NALREP, two additional proposals have been received which will be considered at this meeting. These are:

Proposal	Participating Institutions	Spokesman
Muon #348	Harvard University University of Illinois	R. Wilson
Muon #349	Harvard University University of Illinois	T. B. W. Kirk

The deadline for submission of written materials to be considered at the Future Muon Program Workshop is December 17, 1974. Plans for the workshop will be discussed at the fall meeting of the Fermilab Program Advisory Committee, and further details will then be announced in NALREP.

USERS CENTER HOURS EXTENDED. . .

Anyone in search of relaxation--refreshment, conversation, and a game of ping pong or pool--should drop by the Users Center in the former Village Cafeteria. The Center is now open on Mondays from 5:00 to 7:30 p.m., and on Tuesdays through Saturdays from 5:00 to 11:00 p.m. It is closed on Sundays. Norman Worthley has taken charge as bartender-manager of the

Center. Jane Theis, Laboratory Recreation Director, acts as coordinator for functions and activities in the Center.

DIAL HACK. . .

On-site taxi service can now be obtained by calling Ext. 4225 (HACK) during regular weekday business hours. In addition to this all-day service, the driver is authorized to drive off site to the bus stop at the corner of Wilson Street and Batavia Avenue in Batavia. From this point, the Continental Air Transport Company bus travels to and from O'Hare International Airport. The bus is the least expensive way to reach Fermilab from the airport.

Experimenters wishing to be met at the Batavia bus stop may telephone the Laboratory from O'Hare and from other points in downtown Chicago by dialing 261-1910 (toll-free). To call from Batavia, use the main Laboratory telephone number, 840-3000. The operator will arrange for the taxi. HACK is a restricted telephone extension, and cannot be reached from off site except through the Fermilab switchboard operators.

FACILITY UTILIZATION SUMMARY--OCTOBER 1974

During October there was steady progress in the high energy physics program, although the operating efficiency for the accelerator was somewhat below the levels recorded in recent months. In all, some 398 hours of beam time were available for the experimental program, or 70% of the 568 hours scheduled. The reduced reliability resulted from a series of apparently unrelated incidents in the accelerator systems and the experimental areas. On the more positive side, October marked the successful completion of data collection work by several experiments. The Proton area was successfully started up after a six-week shutdown period for construction and modification to the control center and experimental setups in both Proton Center and Proton East. In addition, the Accelerator External Beam Systems Group brought the equipment and programming for one-turn fast beam extraction into operation at low intensity. This worked satisfactorily, and will be used at high intensity for the upcoming neutrino experiments in conjunction with the two neutrino horns. A failure in the transmission line for horn #2 at the end of October delayed the beginning of work on this portion of the program until early November.

Eight experimental groups were active in various stages of data-taking work in the Meson Area during October. These included Total Cross Section #104, K^o Regeneration #82, Neutron Dissociation #305, and Missing Mass #51A, all of whom completed data collection in the current phase of their proposed programs; Elastic Scattering #7, Neutron Backward #12, and Photon Inclusive #268, all of whom either resumed or continued work that

had begun earlier; and Elastic Scattering #69A, who completed tuning up their apparatus and began data-taking late in the month. In addition, Neutral Hyperon #8, Multiparticle #110A, and Neutron Elastic Scattering #248 used available beam for setup and debugging work, while tests were run by Detector Development #261, Inclusive Scattering Proposal #118A, and Di-Muon Proposal #337.

The focus of the Neutrino Area program during October was to bring the 15-foot bubble chamber into full operation and then complete the 50,000-picture hadron run for Engineering Run #234 by directing a 250-GeV/c π^- beam into the chamber. Although a number of problems developed in the chamber cooling loops and in the optical and camera systems, there was sufficient running time when both the chamber and the accelerator were operating simultaneously to permit completion of this work as planned. Since the steel piston is still being used in the chamber, operation was restricted to one pulse per accelerator cycle and the magnetic field limited to approximately 21 kG. A few hours of running were logged for Neutrino #320, Neutrino #1A, and p-p@100 GeV #194 in the 30-inch chamber in completing runs that carried over from September. The Neutrino Area was shut down on October 2 so that the double-horn target train could be installed. It failed under its initial pulsing tests, and was immediately removed for repair. Meanwhile, in addition to preparations for the engineering run, a number of test experiments were carried out, including retargeting studies in the N-3 hadron beam, tests by Neutrino Area staff on the N-1 muon beam channel as a hadron beam, muon background flux tests by Neutrino #1A, calorimeter

alignment tests in the N-3 beam by Neutrino #21A and a lead glass counter test by Lepton #70/#288. Early in the second week of October, emulsion stacks were exposed in a 200-GeV negative pion beam set up on the N-3 beam line at the 30-inch bubble chamber, for Experiments #264 and #328. A search for tachyon monopoles in cosmic rays, Experiment #202, has set up their apparatus above the 15-foot bubble chamber and begun their investigations using the magnetic field. The double horn was reinstalled and tested; it failed again late in the month after some ten days of pulsing tests, mostly at low voltages. Additional repairs were begun immediately.

On October 22, beam was transported to the Proton-East target area for the first time following their shutdown and construction period. The new Proton Area control center in the basement of the Pagoda was commissioned in the process. Since then, work has been underway to debug instrumentation and controls, to tune the transport line to the target, and then to produce and tune the electron beam as far as the north end of the EE4 enclosure. Some 10^5 electrons per 10^{11} protons incident on the target were observed at approximately 115 GeV. Proton-Center was brought back into operation during the last week of October, and the Lepton #70 group began collecting electron and positron data at a laboratory angle of 50 mrad following a brief startup period.

The only activity in the Internal Target Area was a few hours of preliminary test by the Proton-Nucleon Inelastic #317 group, using a rotating target.

The facility utilization summary for the month of October follows.

I. Summary of Accelerator Operations

		Hours	
A. Accelerator use for physics research			
Accelerator physics research		62	
High energy physics research		397	
Research during other use		(38)	
	Subtotal		459
B. Other activities			
Accelerator setup and tuning to experimental areas		14	
Scheduled interruption		84	
Unscheduled interruption		188	
	Subtotal		286
C. Unmanned time		0	0
	Total		745*

II. Summaries of High Energy Physics Research Use

	# of Expts.	Hours	Results
A. Counter experiments	16	2081	
B. Bubble chamber experiments	1	16	12,782 pictures
C. Emulsion experiments	2	5	7 stacks
D. Special target experiments	2	1	7 targets
E. Test experiments	7	367	51,476 pictures
F. Engineering studies and tests	3	151	
G. Other beam use	-	37	
		2658	

III. Number of Protons Accelerated and Delivered ($\times 10^{17}$)

		Protons @ 300 GeV
A. Beam accelerated in main ring	Total	14.36
B. Beam delivered to experimental areas		
Meson Area		9.37
Neutrino Area		
Main beam		3.24
Bubble chamber beam (estimated)		0.15
Proton Area		0.12
	Total	12.88

*Change to Central Standard Time.

IV. Beam Utilization by Experiment

	Hours	
A. Meson Area		
Elastic Scattering #7	168.4	
Neutral Hyperon #8	88.4	
Neutron Backward #12	234.9	
Missing Mass #51A	243.5	
Elastic Scattering #69A	328.7	
Nuclear Chemistry #81A	-	5 targets
K^0 Regeneration #82	106.0	
Total Cross Section #104	158.1	
Beam Dump #108	1.0	2 targets
Multiparticle #110A	9.0	
Neutron Elastic Scattering #248	102.5	
Photon Inclusive #268	9.0	
Neutron Dissociation #305	109.0	
Detector Development #261	130.4	
Inclusive Scattering Proposal #118A Tests	10.7	
Di-Muon Proposal #337 Tests	1.0	
B. Neutrino Area		
Neutrino #1A	195.6	
Neutrino #21A	81.6	
30" p-d@100 #194	15.5	12,782 pictures
Tachyon Monopole #202	168.0	
15' Engineering Run #234	188.0	51,476 pictures
Neutrino #320	6.0	
Emulsion π^- @ 200 GeV #264	1.5	2 stacks
Emulsion π^- @ 200 GeV #328	3.6	5 stacks
Lepton #70/#288 Tests	21.0	
Neutrino Proposal #254 Tests	9.0	
C. Proton Area		
Lepton #70	72.6	
D. Internal Target Area		
Proton-Nucleon Inelastic #317	6.7	
Total	2469.7	

MANUSCRIPTS AND NOTES PREPARED DURING SEPTEMBER AND OCTOBER

Copies of preprints with Fermilab publication numbers can be obtained from the Publications Office or Theoretical Physics Department, 3rd floor east, Central Laboratory. Copies of all articles listed are on the reference shelf in the Fermilab Library.

Experimental Physics

W. D. Shephard et al. Experiment #2B	One-Particle and Two-Particle Distributions and Correlations in 205 GeV/c $\pi^- p$ Inclusive Reactions (Submitted to the XVII International Conference on High Energy Physics, London, July 1-10, 1974)
F. T. Dao Experiment #37A	Recent Results on Inclusive Reactions (FERMILAB-Conf-74/98-EXP; invited talk given at the 1974 meeting of the APS Division of Particles and Fields, Williamsburg, Virginia)
K. Abe et al. Experiment #67	Search for Nucleon Resonances of Mass Up to 8.5 GeV (Submitted to Physics Letters B)
R. A. Carrigan et al. Experiment #76	Extension of Fermi National Accelerator Laboratory Magnetic Monopole Search to 400 GeV (FERMILAB-Pub-74/93-EXP; submitted to Phys. Rev. D - Comments and Addenda)
E. P. Steinberg and L. Winsberg Experiment #81	Recoil Properties of ^{22}Na and ^{24}Na Produced in the Interaction of ^{27}Al with 3 to 300 GeV Protons (Submitted to Phys. Rev. C)
S. A. Azimov et al. Experiment #183	Multiplicity Distribution from Coherent Interactions of Protons with Nuclei in the Energy Range 20-200 GeV/c (Submitted to Physics Letters)
S. V. Mukhin and V. A. Tsarev Experiment #186	Recent Results on Nucleon Diffractive Dissociation (FERMILAB-Conf-74/97-THY/EXP; invited paper at the 1974 meeting of the APS Division of Particles and Fields, Williamsburg, Virginia)
B. Robinson et al. Experiment #188	Inclusive Cross Sections for $p + n \rightarrow p + X$ Between 50 and 400 GeV (Submitted to Phys. Rev. Letters)

F. T. Dao et al. LBL Experiment	Evidence for a Non-Hulthen Impulse-Model Component in $K^+d \rightarrow K^{*0}(890)pp$ at 2.0 GeV/c (Submitted to Phys. Rev. Letters)

Theoretical Physics

J. B. Bronzan and J. W. Dash	Higher Order ϵ-Terms in Reggeon Field Theory (NAL-Pub-74/54-THY; submitted to Phys. Rev. D)
M. B. Einhorn	Precocious Scaling and Duality in Lepton Scattering at Large Momentum Transfers and in Electron-Positron Annihilation (FNAL-Conf-74/67-THY; lecture delivered at the 9th Balaton Symposium on Particle Physics, Balatonfured, Hungary, June 12-18, 1974)
S. D. Joglekar	Renormalization of Spinor and Scalar Electrodynamics with Bilinear Gauge Conditions (FERMILAB-Pub-74/69-THY; submitted to Phys. Rev. D)
K. Kang and B. Nicholescu	Models for Hadron-Hadron Scattering at High Energies and Rising Total Cross Sections (FERMILAB-Pub-74/72-THY; submitted to Phys. Rev. Letters)
M. B. Einhorn	A Review of Some Recent Experimental Results from Fermilab (FERMILAB-Conf-74/74-THY/EXP; presented at the 9th Balaton Symposium on Particle Physics, Balatonfured, Hungary, June 12-18, 1974)
A. R. White	Recent Progress in the Reggeon Calculus (FERMILAB-Conf-74/77-THY; invited talk presented at the SLAC Topical Conference on Strong Interactions, August 8-10, 1974)
L. A. P. Balazs	Some Applications of f/P Universality to Inclusive Processes in the Triple-Reggeon Region (FERMILAB-Pub-74/78-THY; submitted to Phys. Rev. D)
H. Cheng and T. T. Wu	Remarks on e^+e^- Annihilation into Hadrons in Quantum Field Theory (FERMILAB-Pub-74/87-THY; submitted to Phys. Rev. D)

General

J. Ryk	Gradient Magnet Power Supply for the Fermilab 8-GeV Proton Synchrotron (FERMILAB-Pub-74/85; submitted to IEEE Transactions on Industrial Applications)

Physics Notes

W. W. Neale FN-259	Enriched Particle Beams for the Bubble Chambers at Fermi National Accelerator Laboratory
A. Van Ginneken FN-260	Comparison of Some Recent Data on p-Nucleus Interactions with the Hagedorn-Ranft Model Predictions
B. C. Brown FN-261	A Bibliography on Direct Production of Leptons and Lepton Pairs in Hadron Collisions

DATES TO REMEMBER

December 17, 1974	Deadline for receipt of materials to be considered at the Future Muon Program Workshop.
January 17, 1975	Future Muon Program Workshop.
February 20, 1975	Deadline for receipt of material to be considered at the spring meeting of the Fermilab Program Advisory Committee.
March 20-22, 1975	Spring meeting of the Fermilab Program Advisory Committee.