national accelerator laboratory

NAL-32
0100

PROGRESS REPORT ON THE 200-GeV ACCELERATOR OF THE NATIONAL ACCELERATOR LABORATORY

A. Lincoln Read

August 1969

Operated by Universities Research Association Inc. Under Contract with the United States Atomic Energy Commission

NAL-32
0100

PROGRESS REPORT ON THE 200-GeV ACCELERATOR OF THE NATIONAL ACCELERATOR LABORATORY*

A. Lincoln Read
National Accelerator Laboratory
Batavia, Illinois 60510

and

The University of Michigan
Ann Arbor, Michigan 48104

August 1969

ABSTRACT

This talk is divided into three parts: 1) A review of the principal design features of the 200-GeV accelerator and of the laboratory facilities to be built at the accelerator site; 2) A review of the current status of the design and construction work on the various component sub-accelerators which comprise the 200-GeV accelerator; and 3) A brief discussion of the plans which are being developed for experimental facilities and high-energy physics research at NAL.

---

*Invited paper presented to the Particles and Fields Division of the American Physical Society, Boulder, Colorado, Conference on High Energy Physics.

I. PRINCIPAL DESIGN FEATURES OF THE NATIONAL ACCELERATOR LABORATORY

The overall site plan is shown in Fig. 1. The first sub-accelerator in the complex is the 750-keV Cockcroft-Walton set, which injects beam into a 200-MeV linear accelerator. The linac is similar in many of its design features to the 200-MeV linac injector which is being built in the conversion program for Brookhaven's 33-GeV AGS. The beam from the 200-MeV accelerator is injected into the booster accelerator, which is a 8-GeV, 15-Hz proton synchrotron. The 8-GeV booster beam is injected into the main 200-GeV accelerator. The main accelerator has a radius of 1 kilometer, and in this machine the beam is accelerated to 200 GeV, which corresponds to a magnetic field of 9 kilogauss in the dipole guiding magnets around the ring. This low-field feature was built into the design so that a later increase in the capacity of the main-ring magnet power supply would readily accommodate an increase in the energy capability to 400, perhaps 500, GeV. The 200-GeV protons in the main accelerator are ejected into an external proton line where the beam is split into a number of separate proton beams with the use of beam-splitting septum devices. The proton beams are then transported to a number of targets for production of secondary beams for the high-energy physics research experiments.

With the site arrangement that is planned, there is the possibility of the future development of external proton beam facilities up to about

three miles in length. The end of the experimental-area #1 (see Fig. 1) is a likely location for a large bubble chamber, which is placed in an intense beam of high-energy neutrinos, for the study of weak interactions at high energy.

Figure 1 also shows the location of the former village of Weston. This area, known now as NAL Village, houses the present design quarters for the laboratory staff. There also are a number of small laboratories, for the development of various machine components, in the Village. In addition to the linear accelerator, the booster, the main ring, the experimental areas, and the Village, Fig. 1 also shows the planned locations of the central laboratory and office building and of the industrial areas.

II. CURRENT ACTIVITIES AT NAL

Before discussing some of the highlights of the present activities at NAL, I shall tell you about schedule dates for major milestones of the 200-GeV accelerator construction project. In June 1967, an accelerator design team was assembled in Illinois and started work. In October 1967, a conceptual design and cost estimate for the accelerator was prepared. On the basis of this design, a request to the AEC for construction funds was submitted. In January 1968, the National Accelerator Laboratory Design Report was produced; this report described in some detail the conceptual designs which had been developed in 1967. At the end of 1967, the Laboratory was allotted about $5 million of design

funds to pursue the detailed design of the accelerator. In July 1968, Congress appropriated some $14 million. These funds made possible a start on the construction of buildings to house the injector accelerators and associated equipment, in December 1968. About three months later, the construction of the building to house the booster was started. Early in 1969 a request was sent to Congress for about $90 million for the following fiscal year (July 1969 to June 1970); these funds were needed to build the main-ring enclosure and some of the external beam enclosures, and also to order a substantial amount of the main-ring equipment and almost all of the accelerator components for the linear accelerator and the booster accelerator. These new funds have not yet been appropriated, but we expect to learn in a few weeks how much money we will have for the new (1970) fiscal year.

I shall now briefly discuss some highlights of the future milestone goals of the construction project. Early in 1971, it is planned to have the 200-MeV linac fully operating. In the summer of 1971, the 8-GeV booster should be working. By the end of 1971, the main-ring accelerator should operate at 200 GeV, and a 200-GeV beam extracted for the first time. In July 1972, the experimental physics program will start. The achievement of this last goal would correspond to a realization of the initial goal set by the Director at the start of the project in 1967. At the moment, the construction project is definitely on schedule.

I shall now discuss in more detail some aspects of the accelerator design and construction work. I will start at the injector end of the facility. A few months ago, a prototype 750-kilovolt Cockcroft-Walton injector was put into operation and a number of beam performance tests carried out. The beam characteristics obtained to date--intensity, emittance, stability, etc., indicate that the original design goals for beam performance can be met.

Towards the end of June, the first section of the 200-MeV linac--a prototype 10-MeV linac--was put into operation. This summer, the Linac Section was able to order almost all of the components for the entire machine--drift tubes, tanks, drift tube quadrupoles, various power supplies, and some components for a second pre-accelerator column.

Figure 2 shows a view of the early digging work at the linac site back in the winter. Figure 3 shows what happens when it thaws. There have been days when the bulldozers could not even move, let alone do their work, because of the mud.

Figure 4 shows a recent view of the construction work on the linac building. The building is expected to be finished on schedule and available for installation of linac equipment around the end of December 1969.

The photograph in Fig. 5 shows a view of the 750-keV column.

Figure 6 shows the first (10-MeV) linac tank. The drift tubes inside the 10-MeV tank are shown in Fig. 7.

I shall next discuss the work on the booster accelerator. The buildings to house the booster and the booster equipment started in February 1969, and are due to be completed in April 1970. In January 1970, the installation of some of the booster equipment will begin in these buildings. Up to the present time a wide variety of prototype magnets, magnet stacking mechanisms, mounting and aligning systems have been tried out. In particular, there is a prototype section of booster tunnel and accelerator equipment in the laboratory area in the Village. It is expected that the booster section staff will be able to place orders for all of the major components of the booster accelerator late in 1969.

Figure 8 shows a recent view of the construction work on the booster enclosure.

Figure 9 shows a view of the prototype booster tunnel just before starting installation of booster-accelerator equipment. Note the curvature of the tunnel.

Figure 10 shows a main-ring prototype enclosure which has an average radius of curvature of 1 km; it is difficult to discern any tunnel curvature at all!

The main-ring accelerator group plans, in a few months' time, to place orders for major items of equipment for the main accelerator, such as the 700-odd 20 foot-long dipole magnets. Like the booster group, the main-ring group is presently at the stage of testing various prototype components from the points of view of magnet field performance,

power supply performance, alignment procedures, and so forth, and they are confident that they will meet their deadlines for placing their major equipment orders in a few months' time.

Figure 11 shows a model made out of wood and cardboard of a main-ring magnet and tunnel section.

Figure 12 shows a recent aerial view of the NAL Village.

III. PLANS FOR EXPERIMENTAL UTILIZATION OF THE 200-GeV ACCELERATOR

I shall conclude my talk with a brief description of the planning work being done in preparation for experimental utilization of the machine.

First, in Fig. 13, is shown magnetic field (proton energy) vs time curves for the main accelerator. During the injection time of about 0.8 seconds, 13 bunches of protons are accelerated to 10 GeV and ejected into the main ring by the booster machine. These 13 bunches add up in length approximately to the circumference of the main accelerator. The basic injection-accelerator-fast extraction cycles for 200 and 400 GeV use of the accelerator, are shown on the upper half of Fig. 13. The main-ring cycles which correspond to the use of a 1 second flat top are shown in the lower half of the figure. At 200 GeV, the duty cycle for counter experiments, which need the full 1 second flat top, is 25%; 1 second of beam in each 4 second cycle.

Figure 14 shows the planned overall layout of external proton beams and experimental areas. The extracted proton beam is split into three separate proton beams. Septum devices at stations S1 and S2 are used to split a proton beam into separate beams, which are subsequently further separated with the use of an array of main-ring bending magnets. In the next few months detailed designs of the proton beams, the target areas, and the secondary beam, and experimental areas will be carried out. Shortly thereafter, the Laboratory will start to procure some experimental equipment, including secondary beam line equipment, for use in the experimental areas.

Figure 15 shows area 2, where a large number of relatively simple, relatively standard beams will be installed with a major goal of enabling about six experiments to be carried out simultaneously. This is the experimental area which is to be built first. Area 2 is planned to be ready for operation in July 1972.

Experimental-area 1 features a high-intensity, high-energy beam of neutrinos. One of the detectors in this beam is likely to be a large cryogenic bubble chamber. Less well defined at the present time, a third experimental area is planned, in which special beams or special experiments which are difficult to accommodate in areas 1 or 2 will be installed.

Figure 16 shows some of the devices that the beam transfer group are designing and building for the separation of the proton beam into two

beams. These components are similar to those used to extract the proton beam from the main-accelerator ring; the design value of the extraction efficiency is 99.9%. Prototypes of many of these devices have already been built and made to work.

Figure 17 shows one of a number of studies of possible layouts of beams, shielding, and experimental buildings in area 2.

Figure 18 illustrates why the shielding to stop muons with energies up to 200 GeV presents real practical problems. This figure shows a cross section through the muon shield 150 feet downstream from the production target, in the case of the arrangement of beams which was shown in the previous figure. Access to the beam transport elements is difficult, with this sort of arrangement of muon shield. One possible solution to this problem is shown in Fig. 19. In this model, the beams run through small tunnels which are surrounded by earth shielding; earth is used in order to minimize the cost of the radiation shield. The earth shielding runs over a longer length of the beam than would have been the case if concrete had been used. At the end of a beam line, there would be individual experimental buildings. In the detailed design work on area 2 layout of buildings and facilities in the coming months, it is clearly going to require much ingenuity and hard work to produce as many beams as one would like with the money that we expect to have available for their construction.

Figure 20 shows a possible secondary beam magnet. This is a superconducting dipole which is essentially the same as a 20-kG room-temperature magnet except that the coils are made of superconductor instead of copper; the magnet therefore has smaller overall dimensions than the corresponding room temperture magnet might have. A number of model superconducting magnets are being built so that we can determine whether and to what extent we can replace conventional magnets by superconducting magnets in the experimental beam lines.

Figure 21 shows, for the six beams shown in earlier figures, typical π^- beam intensities that can be obtained at various energies.

Figure 22 illustrates a possible experimental layout that was proposed in 1968 for the study of multiparticle production in high-energy collisions. The question of how to optimize the arrangement of detectors and spectrometer magnets of apparatus is clearly very complicated. Ideas on this subject range from a plan to have a large number of spectrometer magnets of different shapes and sizes, one or two of which would be used in any given experiment, to a plan where there would be a small number of large-volume magnetic spectrometers, with essentially "4π" detection of secondaries from high-energy collisions.

Figure 23 shows some possible nuetrino beam intensities. Studies are in progress to determine what is the right kind of focusing device for pions and kaons and the best choice for π/K decay length and the choice of material for the muon filter at the end of the decay region. At the

moment, it is not clear what is the optimum neutrino beam design. For the first round of neutrino beams a final design will need to be chosen in the next few months.

Figure 24 shows a view of the proposed 25-foot bubble chamber which is being designed by the Brookhaven bubble-chamber group under the auspices of a joint NAL-BNL project. A request for AEC funds to construct this chamber is to be submitted this fall.

At present, then, we have plans and ideas only on paper for the experimental program, but within a year these must develop into specific hardware plans just as has already become the case for the 200-GeV accelerator itself.

I shall close my talk by repeating an earlier remark; namely, to say that, at present, the 200-GeV construction project is indeed on schedule, and that if the work continues as well as it has started in the last two years, we expect to have 200-GeV experiments in progress in July 1972.

DISCUSSION

Nauenberg: Are there any plans to separate neutrino and antineutrino beams in the forward direction, or are all the curves you showed for the sum of the two?

Read: The monopole type of focusing device clearly chooses by polarity. So when it is tuned to pluses, one will characteristically have an antineutrino contamination of say, 1 percent, in a neutrino beam, most of

which contamination will be high-energy antineutrinos. If one chooses the minuses, then given the high ratio of π^+ to π^- production, and at high energies even more significantly, the very high ratio of K^+ to K^- production, one would expect in the antineutrino beam not only to have lower intensity, but to have proportionately some five times or so higher contamination of neutrinos. This is an extrapolation of existing experience with neutrino beams at other labs. If, however, one wants to use a zero degree production quadrupole strong focusing channel, then in its simplest form the channel has comparable acceptance for neutrinos and antineutrinos; according to the particular experiment, this may or may not be an undesirable feature of such a beam.

Erwin: What plans are there for a bubble chamber for strong-interaction dynamics in the two meter range?

Read: I think there are two answers to that. One is the proposed large bubble chamber. Although the large bubble chamber is justified mostly by the need for studies of high-energy neutrino interactions, that chamber is also a candidate for strong-interactions studies. The possibilities and likely practicalities of its use in strong-interaction physics were considered by our summer study groups in the last two years. The conclusion of most people who were active in these studies was that up to incident particle energies of somewhere in the 50-70 range, one can do the kind of strong-interaction physics that can be done in existing bubble chambers with existing machines today. One of the ideas that came from

this year's study group was that for both neutrino and strong-interaction physics, it seems desirable to have a large hydrogen or deuterium target within the bubble chamber, surrounded downstream, and on the sides, by neon for efficient gamma-ray detection.

A second possibility arose in the second month of our recent summer study, in July 1969, sufficiently recently that we have not yet fully evaluated the idea, let alone taken any active steps to implement it. Namely, the group suggested that there was a program of experiments that one could do with a high-precision chamber. For example, Brookhaven's 80-inch bubble chamber, perhaps modified to a slightly higher magnetic field, could be a candidate in the medium energy range, up to say 50 GeV, for some frutiful bubble-chamber experiments along the lines of the present day bubble-chamber physics. I can't really guess at this point how realistic or how likely this trial balloon is, at this time.

There's a third answer to the question, which comes from a large number of bubble-chamber enthusiasts, that you don't need a bubble chamber for strong interactions. "You can do it all with a streamer chamber surrounded by a 4π magnetic field and additional spark-chamber detectors," has been asserted by a number of people with a lot of experience in bubble-chamber physics. This suggestion is a very controversial one, to say the least!

FIGURE CAPTIONS

Fig. 1. Overall NAL site plan.

Fig. 2. Early work at the Linac Building construction site.

Fig. 3. Construction site just after a rainstorm.

Fig. 4. Recent view of Linac Building construction work.

Fig. 5. The 750-keV Cockcroft-Walton accelerator.

Fig. 6. The prototype 10-MeV linac tank.

Fig. 7. Drift tubes inside the prototype 10-MeV linac tank.

Fig. 8. Recent view of Booster Enclosure construction work.

Fig. 9. View of prototype booster enclosure.

Fig. 10. View of prototype main-ring enclosure.

Fig. 11. Model of main-ring magnet and enclosure section.

Fig. 12. Recent aerial view of NAL Village.

Fig. 13. Main-ring accelerator: magnetic field (energy) vs time.

Fig. 14. Proposed layout of external proton beams and experimental areas.

Fig. 15. Possible layout of secondary beams in experimental-area 2.

Fig. 16. Beam splitters: electrostatic septum and septum magnets.

Fig. 17. Possible overall layout of experimental-area 2.

Fig. 18. Possible cross section through muon shield: 150 ft downstream from secondary beam production target in experimental-area 2.

Fig. 19. Another possible overall layout of experimental-area 2.

Fig. 20. Model 20-kG superconducting dipole magnet.

Fig. 21. Intensities of typical possible secondary π^- beams in experimental-area 2.

Fig. 22. Possible multiparticle spectrometer arrangement.

Fig. 23. Intensities of typical possible neutrino beams in experimental-area 1.

Fig. 24. View of proposed 25-foot long cryogenic bubble chamber.

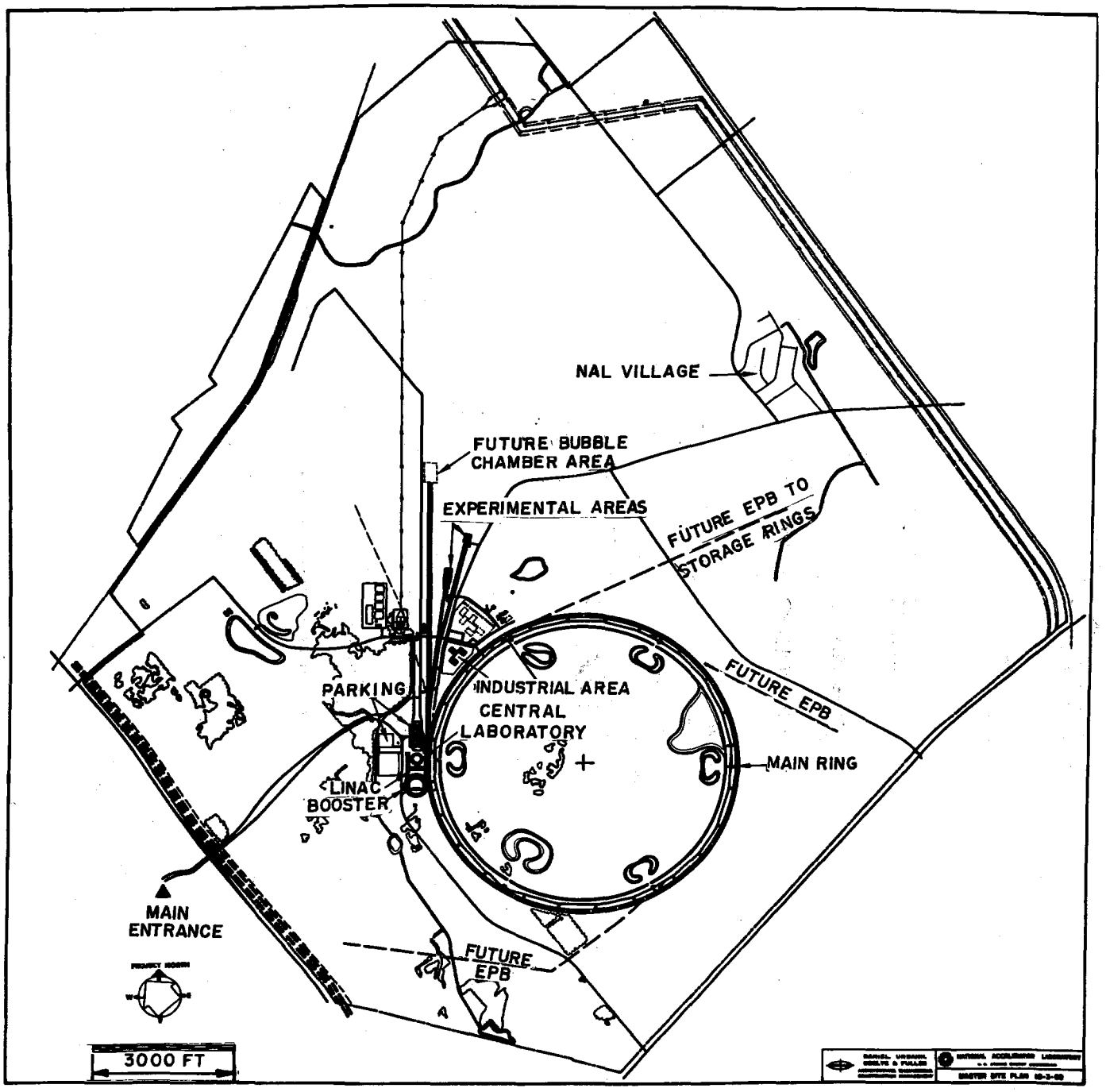
NAL VILLAGE
FUTURE BUBBLE CHAMBER AREA
EXPERIMENTAL AREAS
FUTURE EPB TO STORAGE RINGS
FUTURE EPB
PARKING
INDUSTRIAL AREA
CENTRAL LABORATORY
MAIN RING
LINAC
BOOSTER
MAIN ENTRANCE
FUTURE EPB
3000 FT

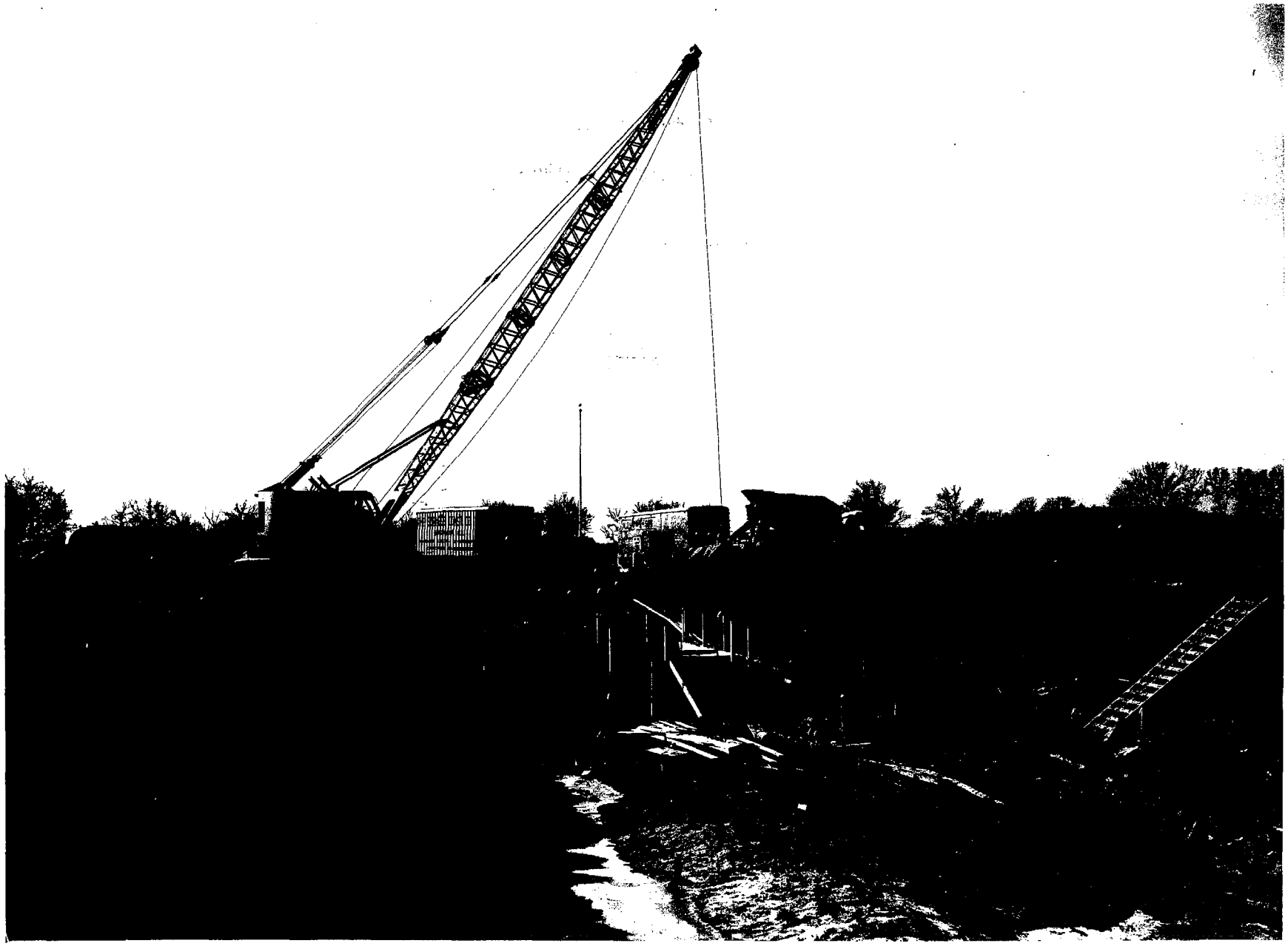

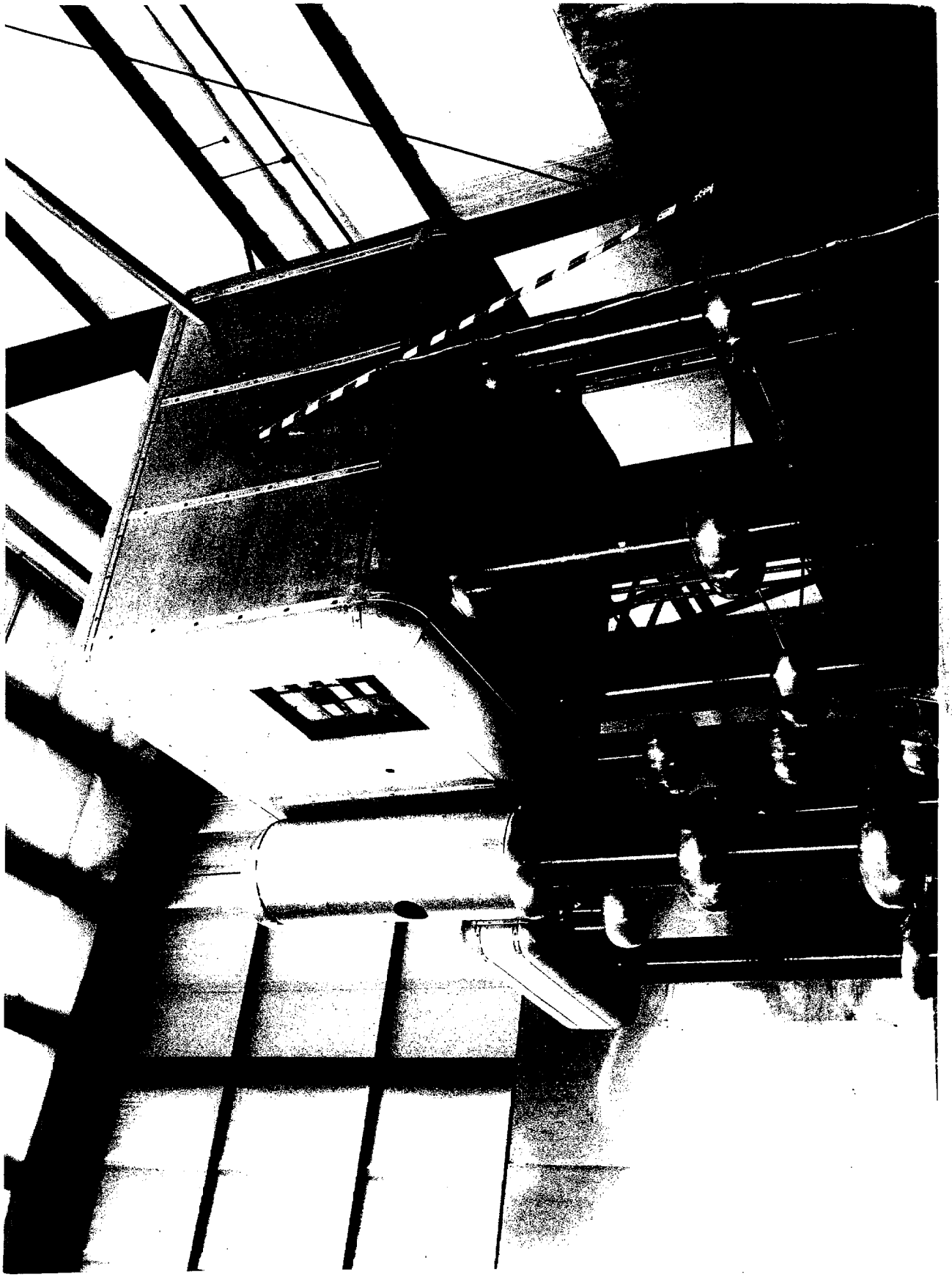

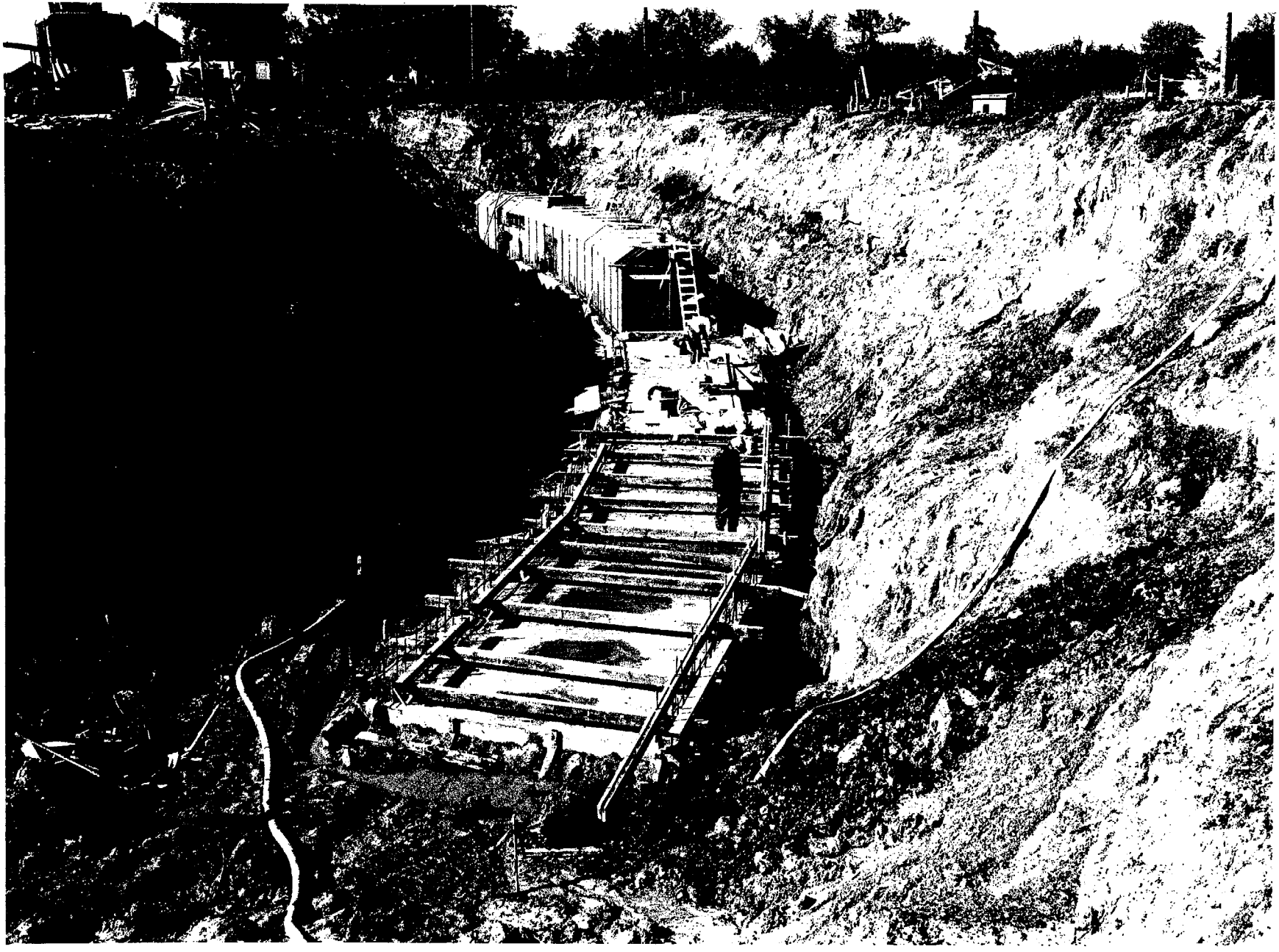

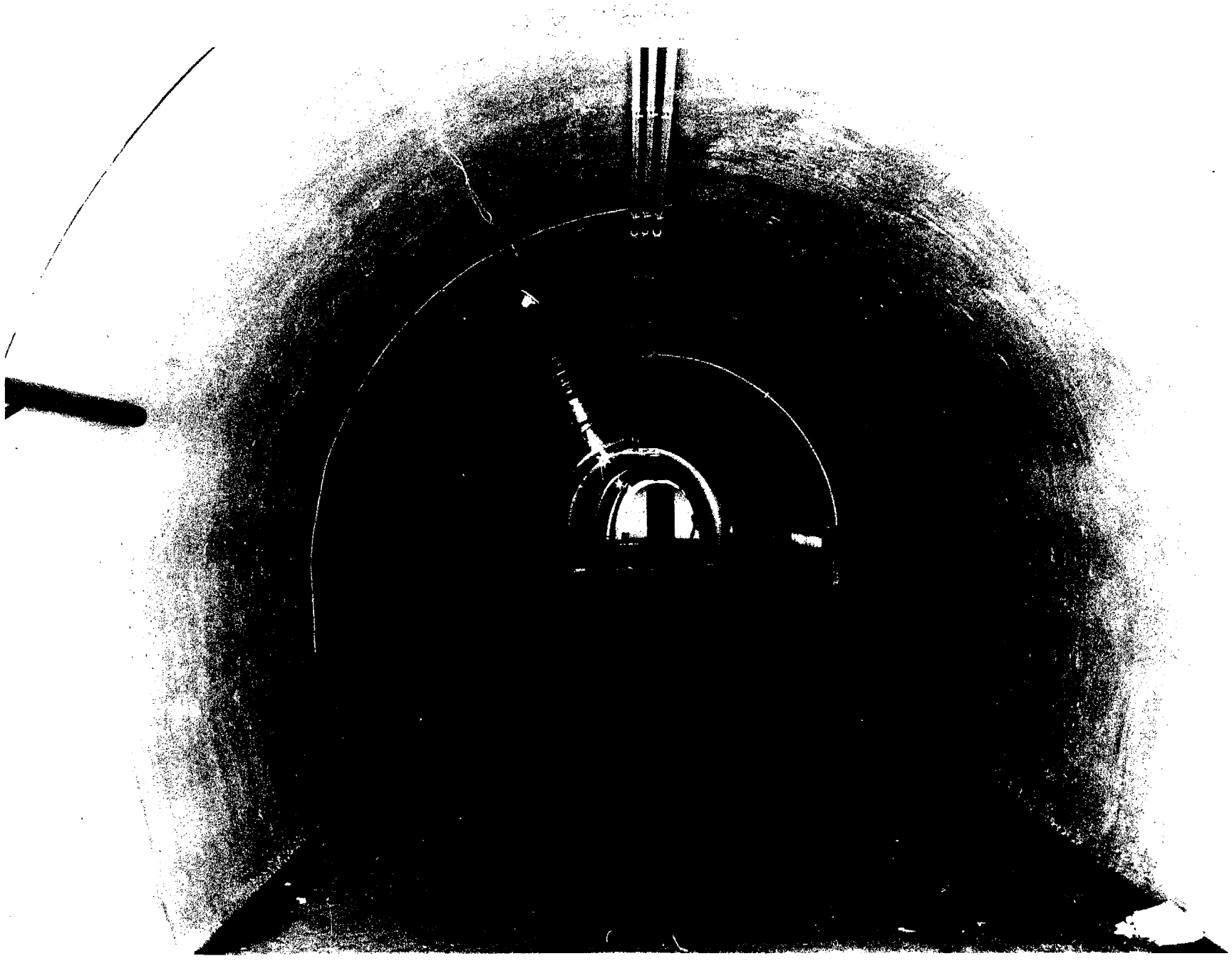

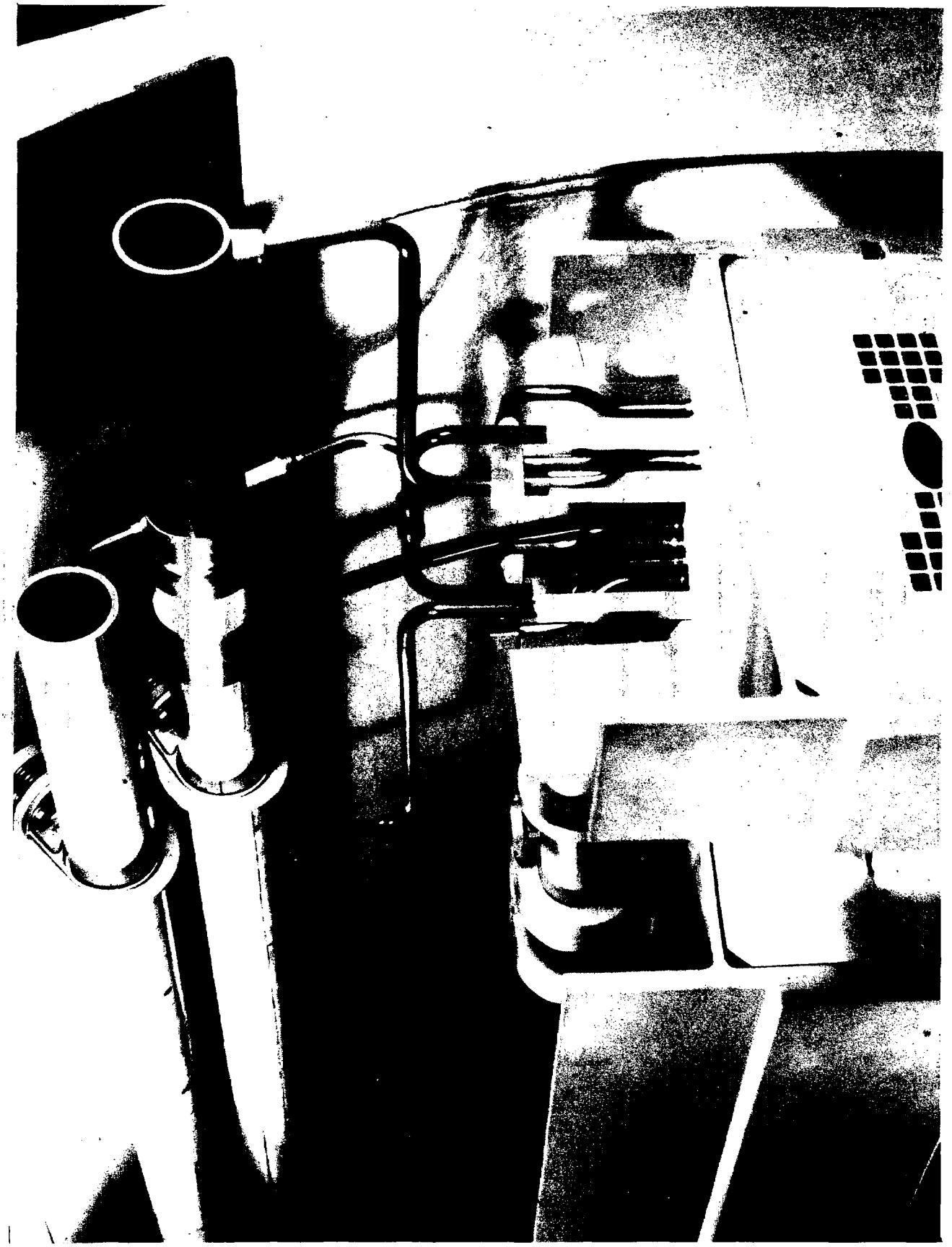

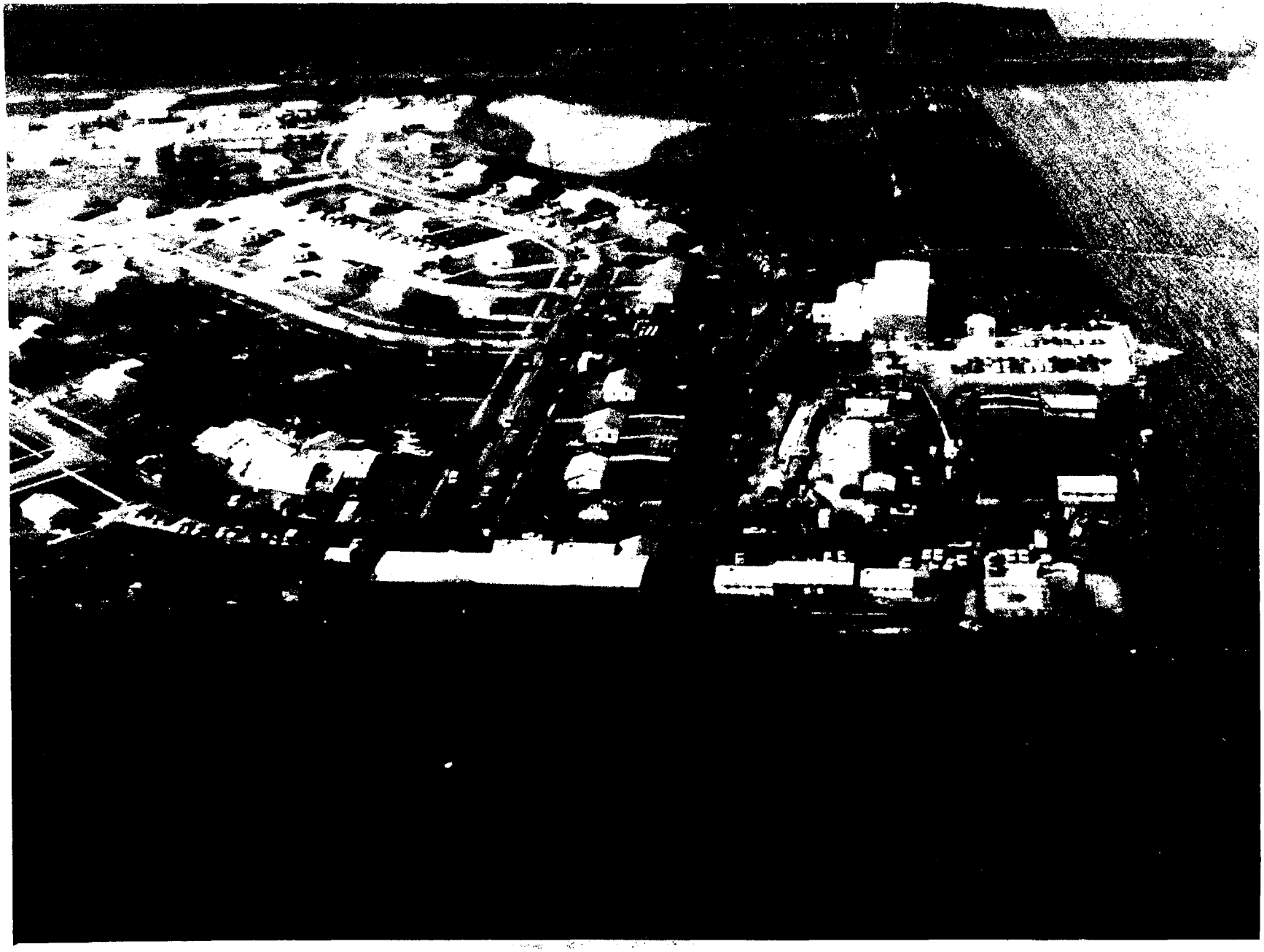

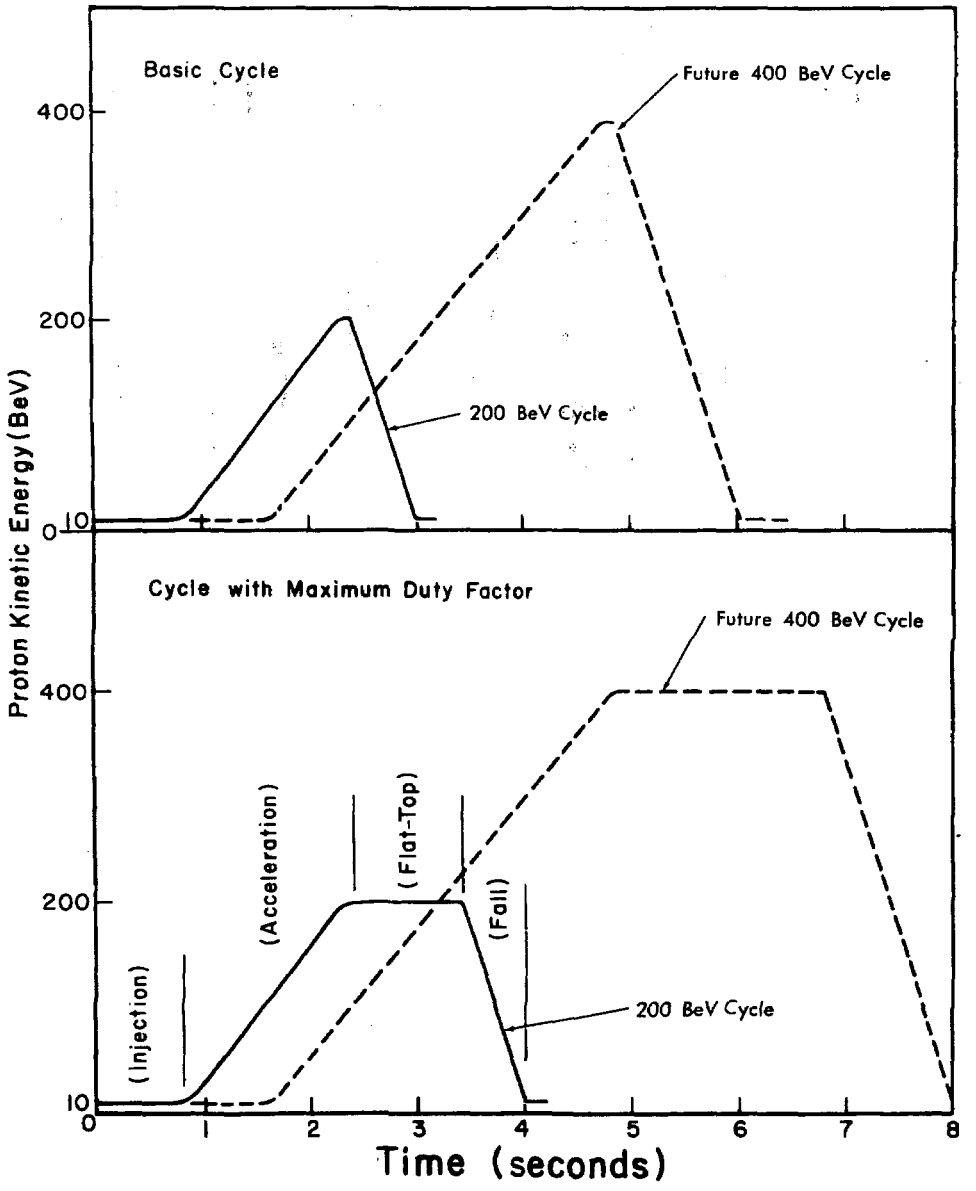
Basic Cycle
Future 400 BeV Cycle
200 BeV Cycle
Cycle with Maximum Duty Factor
Future 400 BeV Cycle
200 BeV Cycle
(Injection)
(Acceleration)
(Flat-Top)
(Fall)
Proton Kinetic Energy (BeV)
400
200
10
0
1
2
3
4
5
6
7
8
Time (seconds)

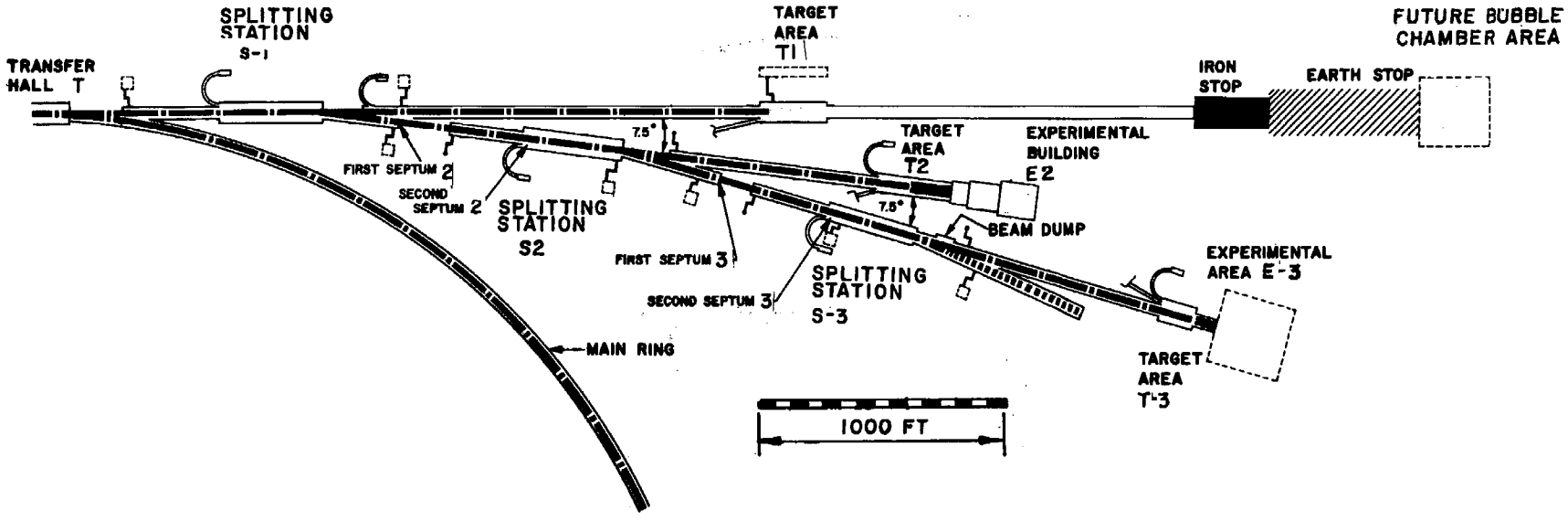

EXPERIMENTAL AREAS

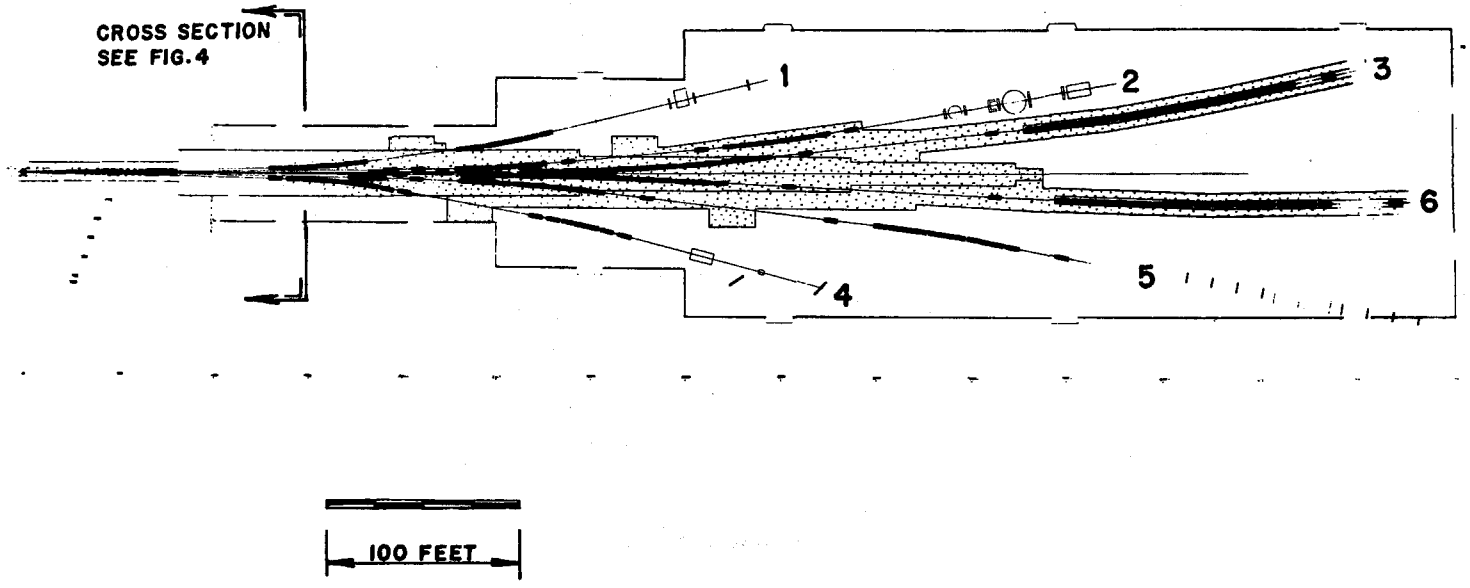
CROSS SECTION
SEE FIG. 4
1
2
3
4
5
6
100 FEET

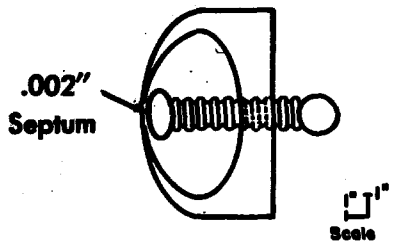

Electrostatic Deflector S1

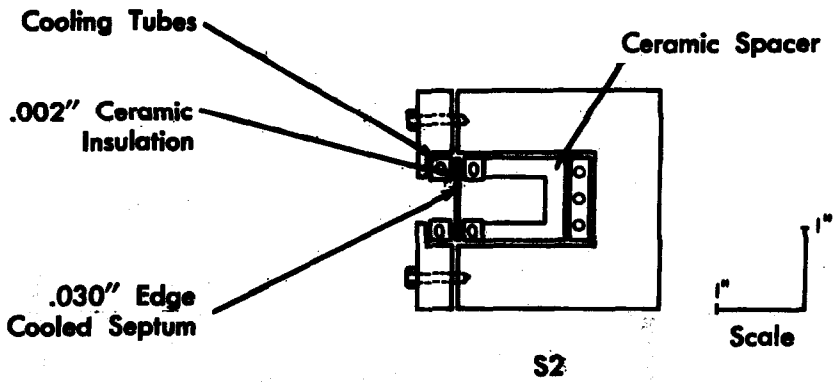

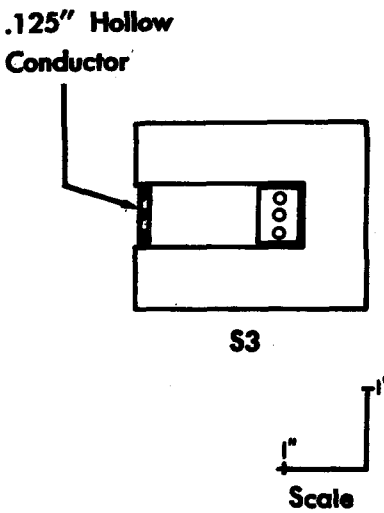

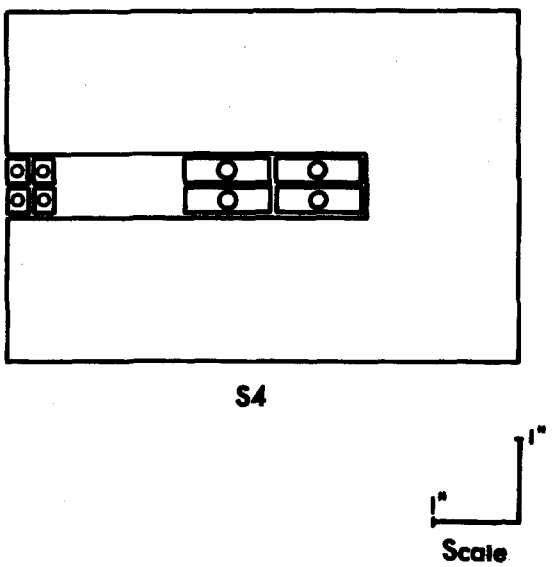

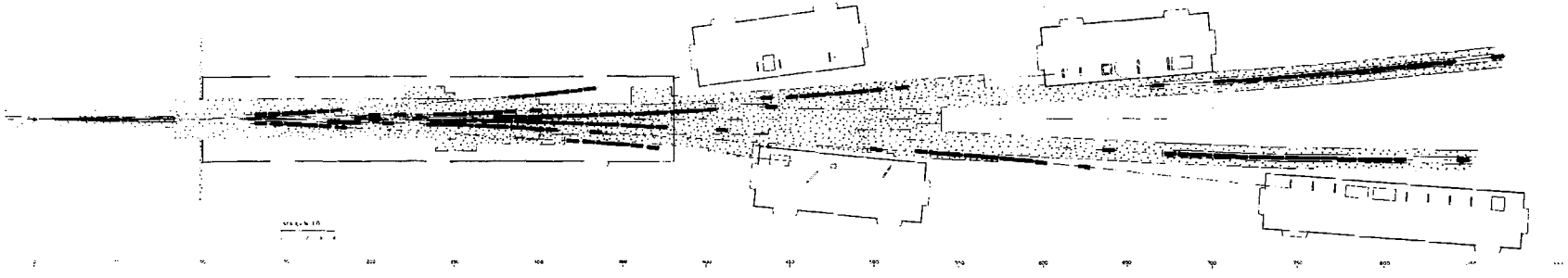

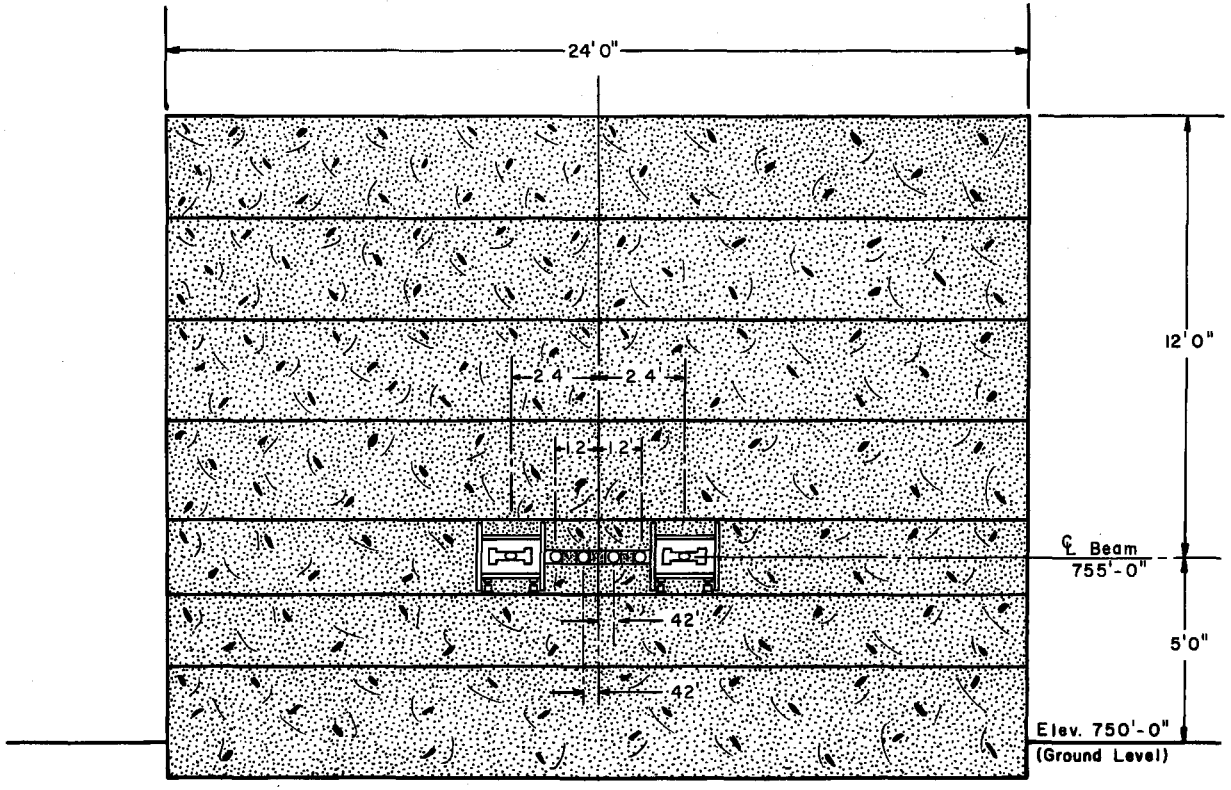
24' 0"
12' 0"
2.4
2.4
1.2
1.2
℄ Beam
755'-0"
42"
42"
5'0"
Elev. 750'-0"
(Ground Level)

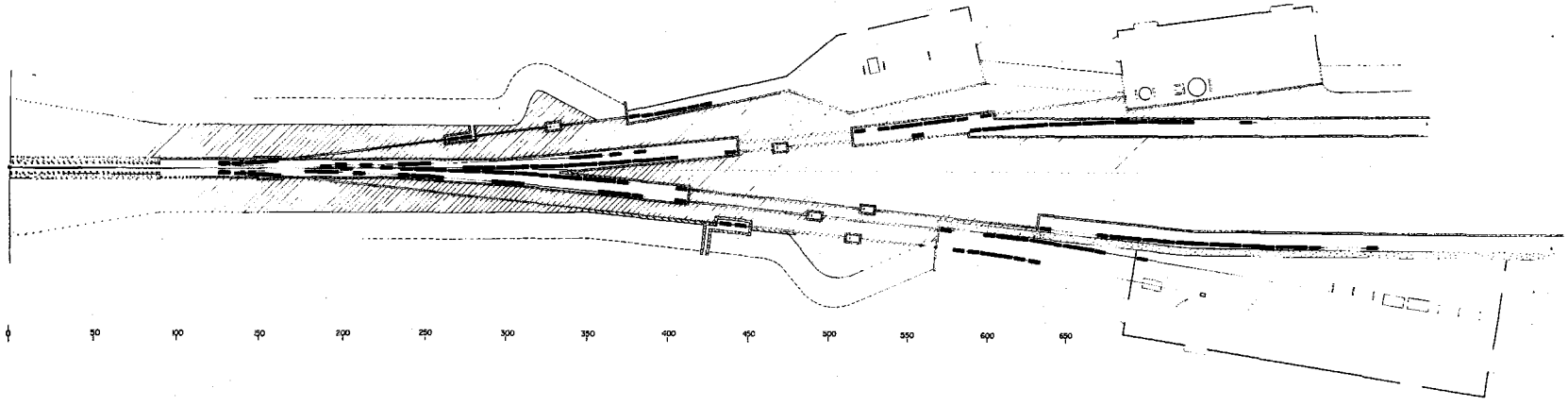
0
50
100
150
200
250
300
350
400
450
500
550
600
650

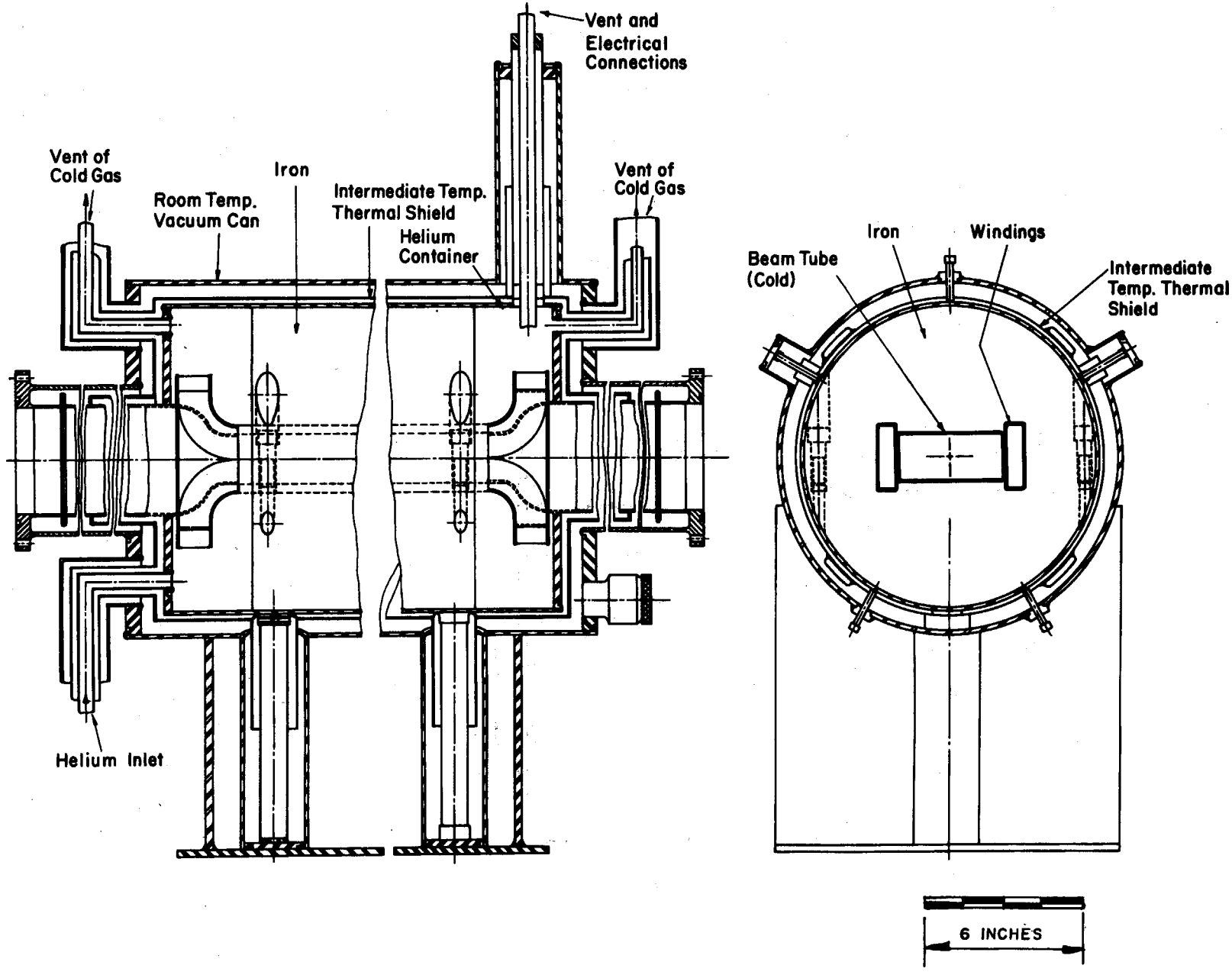
Vent and
Electrical
Connections
Vent of
Cold Gas
Iron
Room Temp.
Vacuum Can
Intermediate Temp.
Thermal Shield
Helium
Container
Vent of
Cold Gas
Helium Inlet
Iron
Windings
Beam Tube
(Cold)
Intermediate
Temp. Thermal
Shield
6 INCHES

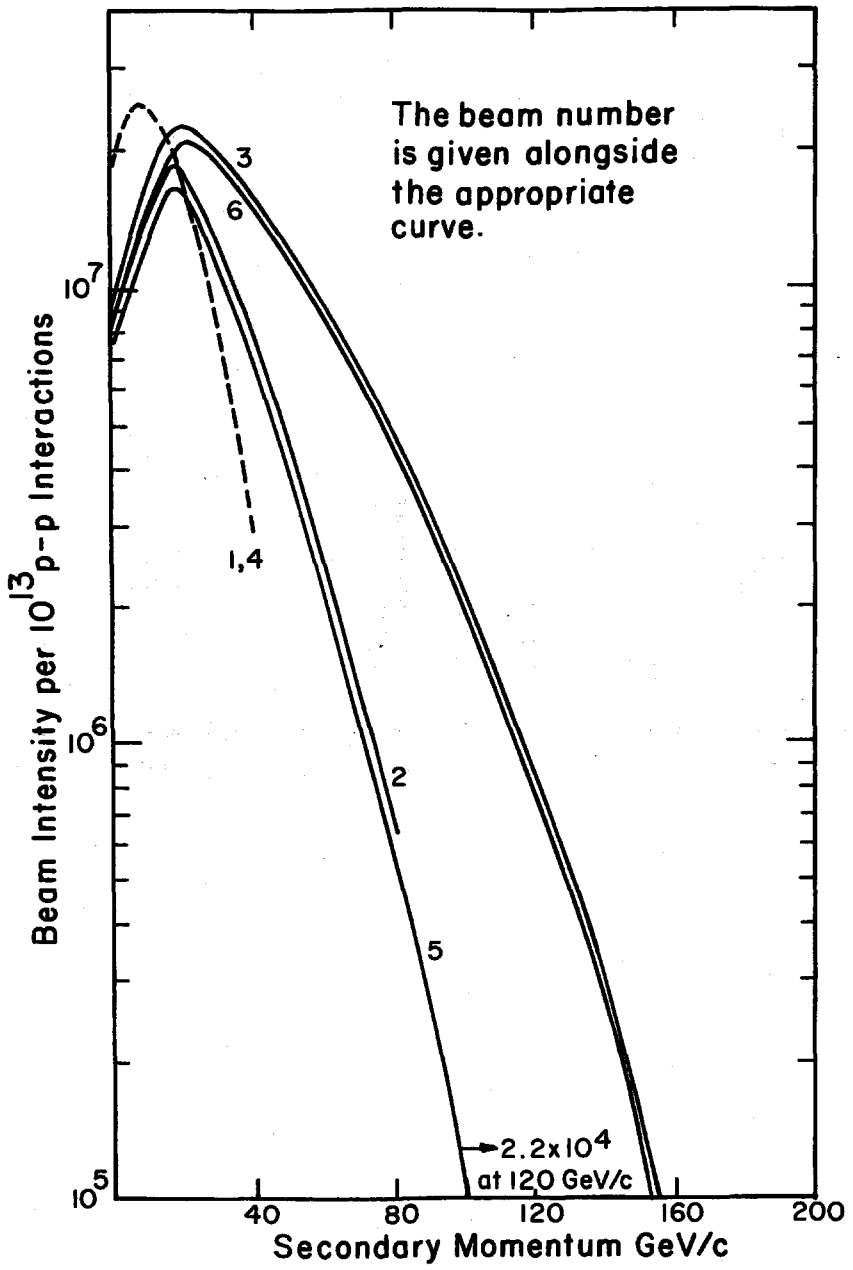
The beam number is given alongside the appropriate curve.
3
6
1,4
2
5
2.2x10^4 at 120 GeV/c
10^7
10^6
10^5
40
80
120
160
200
Beam Intensity per 10^13 p-p Interactions
Secondary Momentum GeV/c

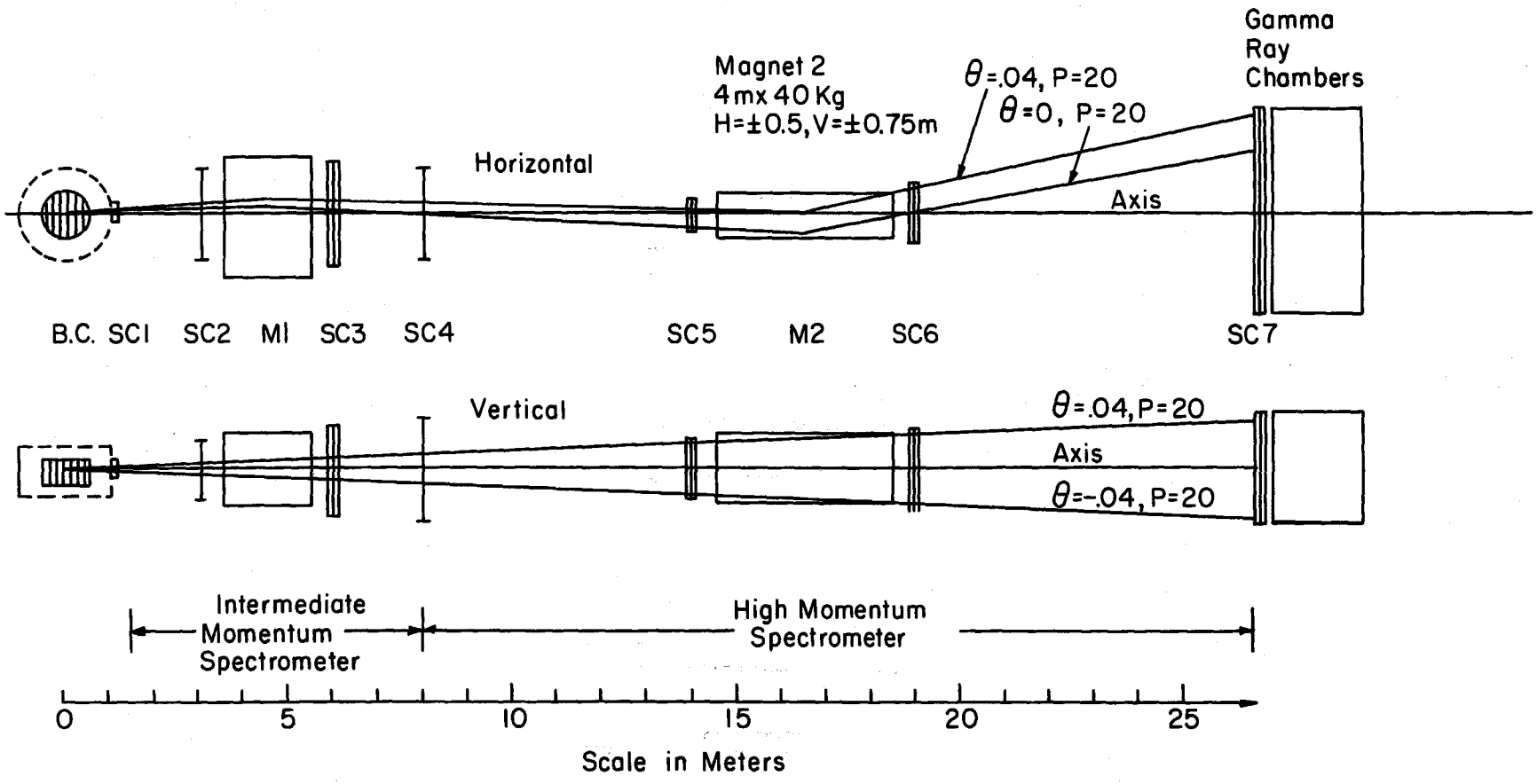
Gamma
Ray
Chambers
Magnet 2
4mx40Kg
H=±0.5,V=±0.75m
θ=.04, P=20
θ=0, P=20
Horizontal
Axis
B.C. SC1 SC2 M1 SC3 SC4 SC5 M2 SC6 SC7
Vertical
θ=.04,P=20
Axis
θ=-.04, P=20
Intermediate
Momentum
Spectrometer
High Momentum
Spectrometer
0 5 10 15 20 25
Scale in Meters

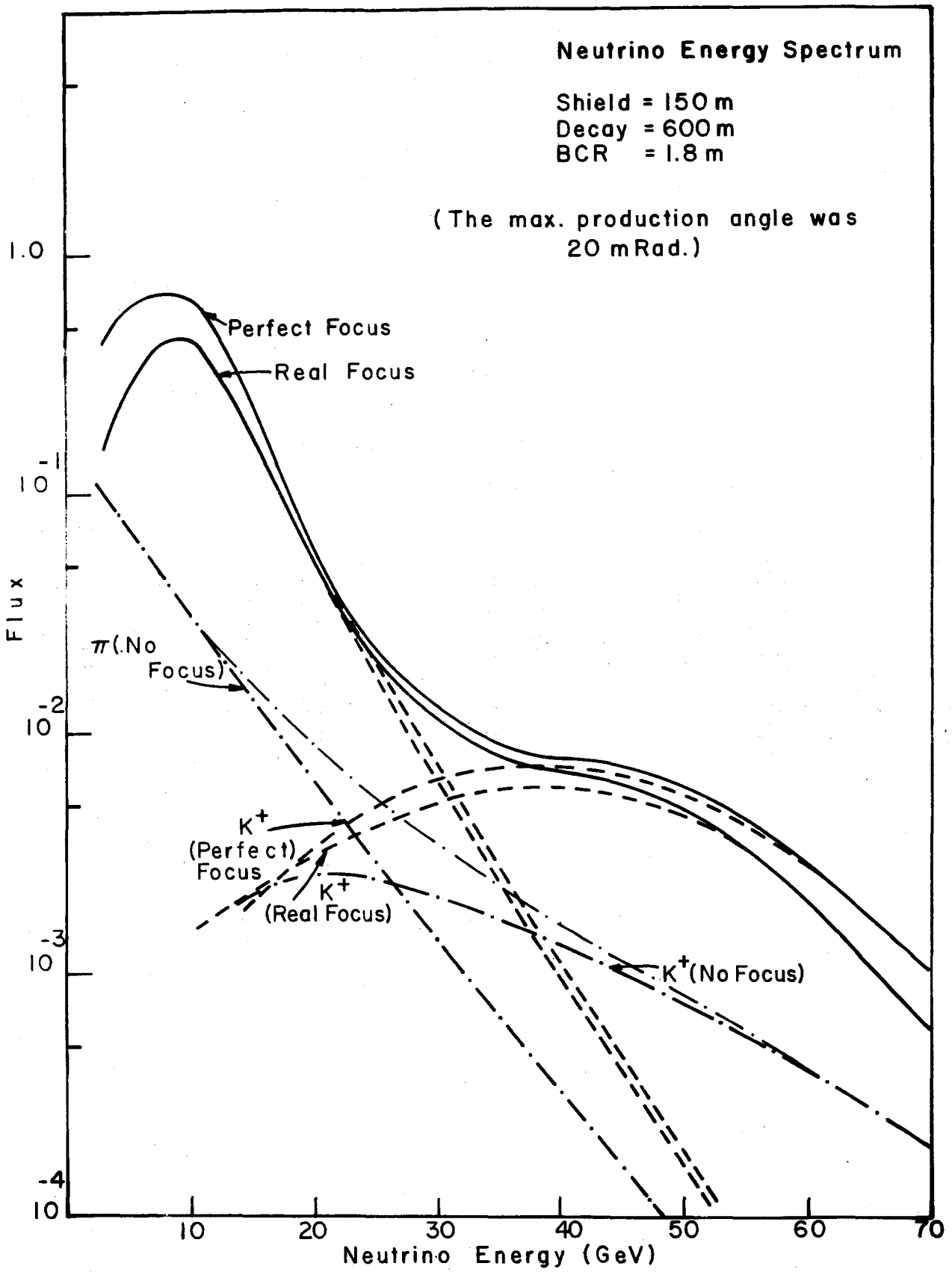
Neutrino Energy Spectrum
Shield = 150 m
Decay = 600 m
BCR = 1.8 m
(The max. production angle was 20 mRad.)
Perfect Focus
Real Focus
π (No Focus)
K+ (Perfect) Focus
K+ (Real Focus)
K+ (No Focus)
Flux
1.0
10-1
10-2
10-3
10-4
10
20
30
40
50
60
70
Neutrino Energy (GeV)

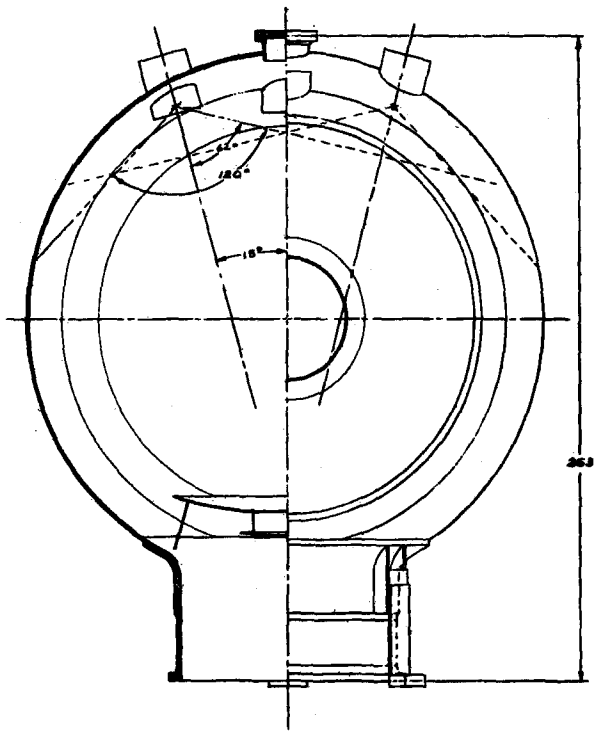

25 FT. BUBBLE CHAMBER
CHAMBER ASSEMBLY
FRONT ELEVATION

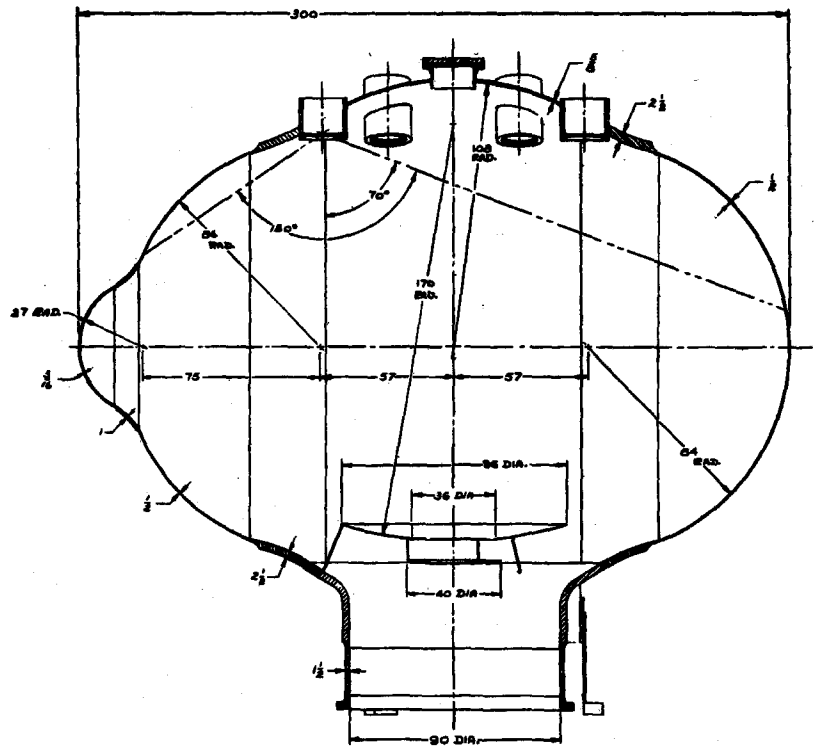

25 FT. BUBBLE CHAMBER
CHAMBER ASSEMBLY
SIDE ELEVATION