NAL-11
0100

national accelerator laboratory

INJECTION ACCUMULATOR
NAL PROTON SYNCHROTRON

R. R. Wilson

May 13, 1968

NAL-11
0100

INJECTION ACCUMULATOR
NAL PROTON SYNCHROTRON *

R. R. Wilson

May 13, 1968

Introduction

Although an injection storage ring or accumulator has been suggested on various occasions by different people[1], it is only recently that plans at the National Accelerator Laboratory have been firm enough that the idea could be given the serious consideration that it deserved. The proposal has been to place the accumulator ring in the same tunnel with the main ring. It would be filled by successive pulses of protons from the booster and then its accumulated beam would be injected into the main ring magnet. Although this interposes an extra step in the injection process, the advantages listed below might more than compensate for the extra cost and effort of building the storage ring.

(1) It would eliminate the technical problem of using the main ring magnet as an accumulator during the 0.8 sec filling time adopted in the NAL Design Report of January 1968. There may or may not be some difficulty in bringing a magnet that has been excited to a field of about ten kilogauss rather suddenly down to 490 gauss and then holding it there without a tremor for 0.8 sec.

(2) By eliminating the 0.8 sec filling time, the basic cycle of the main ring would be shortened from 3.0 to 2.2 sec, hence the average intensity could be increased. Conversely, the new magnet cycle could be stretched out to, say, 2.6 sec which would decrease the cost of the power supply and the rf equipment in the main ring.

(3) The injector would work throughout the cycle instead of just during the filling time. This means that the pulse rate in the booster synchrotron could be reduced from the present value of 15 Herz to, say 5 Herz. This should result in a reduction in the rf equipment, but not by a factor of nine because of the necessity of maintaining a bunched beam at injection.

(4) A reduction in the cost of the rf equipment of the booster might imply a reduction of the linac energy.

(5) The above changes in the injection equipment may result in a better emittance of the beam from the booster due to the lower charge per booster cycle and hence a lower linac intensity. This could mean that the aperture of the main ring might be reduced. For the same reason the booster aperture could also be reduced resulting in a savings in magnet and power supply costs.

(6) As long as the space charge limit in the main ring is not reached the addition of flat top and the resulting reduction

in rep rate of the main ring will not lead to a reduction in the average intensity.

Beyond this, there is the possibility of using the accumulator for clashing beam experiments, assuming some way could be found for reversing the direction of the protons in the storage ring.

The principal disadvantage of the ring, apart from its additional cost to the project in money and effort, is that it would represent an extra complication in the construction and operation of the machine. To some extent, there are also bound to be problems arising from interferences that will result from having two machines in the same tunnel. It should be noted that the operation of the main ring need not be wholly dependent on the accumulator ring. Thus if the accumulator ring should be inoperative for any reason, then at least one pulse from the booster could be injected directly into the main ring so that experiments requiring a reduced intensity might still be made. It might also be possible to inject more than one pulse by the use of a "front porch" on the main ring current cycle as is presently contemplated.

Let us consider a design of an injection accumulator and then we will examine the changes in the machine parameters to which the use of such a ring might lead.

The Accumulator Ring (For parameters see Table I.)

The construction of the accumulator magnets should be compact and simple in order that they would be able to fit in the main ring tunnel. It is suggested that the magnets do not need to be made with any particular accuracy, nor would they need to be accurately aligned or levelled.

Let us assume that the same separated-function lattice would be used for an accumulator ring as for the main ring and that the magnets would be suspended by pipe hangers from the ceiling of the main ring tunnel and just above its center. Instead of positioning the magnets carefully, correction currents in windings in some of the bending magnets could be used to guide the protons through the ring using the beam position to adjust the correction currents.

Thus the beam of protons from the booster would be injected into the first set of bending magnets and then, by means of correction currents in the first bending magnet, directed at the center of the first quadrupole focusing magnet using the beam-position detector that would be located there.

The beam would then be directed at the center of the next quadrupole magnet in the same way and consequently led successively from the center of one quadrupole to the next, until a complete turn of the ring had been made. At that point, a certain amount of

fiddling would be necessary in order to have the orbit close properly. This might be done by appropriately adjusting the injection angle and the correction currents in the first magnet.

The closed orbit that would result, then, would be the equilibrium orbit that would pass through the center of each focusing magnet. The quadrupoles would cause other orbits to oscillate about this equilibrium orbit. An adjustment of the quadrupole current might be necessary to compensate for distributed quadrupole effects in the bending magnets and in the spaces between magnets.*

Magnet Structure

The individual bending magnets might be designed as shown in the figures. They would each consist essentially of an iron pipe about 30 feet long which would contain the simple one-turn coil and donut. The pipe would be fabricated out of long cold-rolled or drawn iron bars, the pieces of which would be assembled around the donut and the copper buses as shown in the figure. They would then be clamped so as slightly to distort the donut and the iron might then be tack-welded together with the short welds spaced about every six inches. As has been emphasized, no great

---

*The argument for a non-circular, non-planar randomly placed magnet is approximate because it does not consider off-momentum orbits.

accuracy of construction should be necessary, but the pole pieces would be aligned by this method as accurately as bar stock comes, i. e., to several mils.

The lattice would be essentially the same as that of the main ring; instead of four there would be three bending magnets, each 30 feet long, between two quadrupole focusing magnets which are roughly one hundred feet apart. The spaces between magnets have been reduced because the magnet acts both as a magnetic shield and a bus bar and the desire is to have it cover as much of the orbit as possible.

The donut could consist of an aluminum or stainless steel pipe of about 1/16 inch wall thickness. Three bending magnets and a quadrupole magnet would be brought into the tunnel separately and then would be assembled in a fixture as a unit about 98 feet long. After the donut had been welded directly together and vacuum tested, the rather limber assembly would be raised as a unit and fastened to the ceiling by means of pipe hangers. The 98-foot long units could be joined together either by welding or by means of conoseal flanges. Sylphons, a vacuum pump, and a beam position detector would be located in each of the approximately 20-inch long free sections next to the quadrupole magnets.

The current sheath quadrupole magnets, each seven feet long, would have the form shown in the figures on pp. 19 and 21. They would be excited by the same current that excites the bending magnets except for the correction current in the thin foils.

The one-turn coil, suggested by Lowell Klaisner, obviates the need for bus bars. The copper bar could be insulated by coating it with a sprayed-on porcelain layer only a few mils thick.

The individual magnets might be roughly aligned and levelled by the adjustment built into the pipe hangers. Although not necessary, this adjustment would tend to minimize the correction currents and to minimize physical obstructions. The horizontal correction currents could also be minimized by adjusting the current in the bending magnets. In fact, by introducing a fraction of the bending magnet current into the horizontal correction magnets in a compensating manner, the magnet could be made insensitive to small changes in the magnet current. Of course as magnet positions change, for example due to settling of the tunnel with time, the correction currents would also have to be changed. Presumably the accumulator ring would be adjusted from time to time using a short low-current pulse, so that the ring need never become very radioactive. There will be adequate space in the six medium straights, now each one-magnet long, and in the 175-foot long straights, for beam scrapers.

The magnet shown in the illustration would require a power supply of about 1.2 megawatts capacity. The dissipation would be about 2 watts per cm and water cooling coils placed loosely near the donut, or possibly fastened to it as shown, would prevent this heat from accumulating in the tunnel. On the other hand this is comparable to what fluorescent lights would make and might be easily absorbed by the walls.

In order to keep the beam bunched, it would be necessary to supply an rf voltage of about 200 kV. This would be at a fixed frequency and might consist of one of the main ring cavities. Keeping the frequency of the rf the same as for the main ring would mean that the harmonic of the orbit frequency would be 1119 instead of 1120 because of the smaller radius of the accumulator.

By locating the accumulator ring in the main ring tunnel, many facilities are already provided such as roughing pumps, utilities and service buildings. The capacity of the multiplex or computer control system would have to be expanded to control and monitor the accumulator. For example, the number of beam sensors would have to be doubled at least.

Beam Transfer

The transfer into the ring could be similar to the transfer from the booster to the main ring already described in the Design Report.

Transfer out of the accumulator is more complicated. It would probably be done over a distance of about 1200' just upstream from the injection point so that small magnets (similar to those of the accumulator) could be used to guide the beam to the same main ring injector presently envisioned.

R. Billinge has pointed out that the magnetic field must be controlled to within 0.01 per cent or a diminution of the emissivity of the beam from the booster will result. This is because successive pulses from the booster might not be injected exactly one-behind-the-next so that coherent oscillations about the changing equilibrium orbit would occur if the field were to change slightly between injections. F. Shoemaker[2] has estimated that the bus bars of the main ring can induce a magnetic field of as much as one gauss inside the bending magnets. The magnet might be magnetically shielded, but a better solution of this problem is to program the current in the accumulator to compensate for the induced magnetic field. This could be done by measuring the induced field, or by sensing the position of the beam and holding it constant, or by a combination of programming and feed back.

One thing that has become clear is that a device to damp the coherent betatron and synchrotron oscillations must be installed. This is a straight-forward and necessary step; it is independent

of the construction of the accumulator.

Change of Design due to Accumulator

The accumulator could be incorporated into the NAL design in many ways. The procedure that has been seriously considered is to incorporate the accumulator now as a part of the synchrotron and to take advantage of the relaxation in component capability - maintaining our designed intensity of 1.5×10^{13} protons/second in all events. Various possibilities and considerations in this regard are given in a report by A. van Steenbergen and R. Billinge[3]. Principally the booster would be affected. Thus the repetition rate would be reduced from 15 to 5 cycles per second which would result in a reduction of booster rf voltage required. The reduction in the rf power turns out to be less than one might naively expect because it would still be necessary to keep the beam bunched at injection. Related to the increase in the main ring cycling rate, the charge per booster cycle could be reduced. As a consequence the aperture of the booster could be reduced by about ten percent and still keep the same current capability. The slower rise time of the booster would simplify the design of an all-metal vacuum chamber.

The reduction in the cost of the booster rf would suggest that a lower injection energy into the booster might be desirable and

economical. An examination of this [4] indicated a cost minimum around 150 MeV - the difference in cost between 200 and 150 MeV being about six percent of the cost of the linac. If the change in the aperture of the main ring magnet were to be included in a consistent way, the difference might reverse. In view of this, and of the advanced state of architectural planning, there would be little reason to change the linac energy.

The use of the accumulator would mean that the magnet pulse could be shortened from 3.0 to 2.6 sec, i.e., the 0.8-second front porch could be omitted and the rise time lengthened from 1.6 to 1.8 seconds. The slower rise time would mean less rf in the main ring as well as less magnet power. The smaller aperture of the booster and the better emittance of the injected beam would also imply a smaller aperture in the main ring. The dimensions of the main ring originally were largely chosen on an intuitive basis. Although even a small change of aperture would involve a rather large amount of money, the change would be irretrievable and hence we would be disinclined to consider it in this context.

An alternative possibility for the use of the accumulator would be to recognize that it is too much of a complication to be adding at this time to our already strained resources and rather to consider adding it at a later time as a method of eventually increasing

the intensity of the synchrotron. In that case we would not change our present design at all, but we would try to keep the tunnel free of utilities that might interfere with the eventual installation of the accumulator. Were it to be installed, and were we to learn how to inject three turns into the accumulator, then the intensity would be increased by a factor of four, i.e., $\frac{3}{2.2} \times 3$.

Postscript - RRW 5/22/68

The above report was written during the first weeks of May 1968. In order to give the suggestion very serious consideration, it was tentatively incorporated as a part of the design of the synchrotron. The cost of the accumulator, as estimated by Brobeck and Associates turned out to be roughly $3 million.[5] The cost saving in the booster rf might be as much as $1.9 million out of the $4.8 million shown in the Design Report. The reduction in cost of the booster magnet due to slower cycling and smaller aperture might be about $0.3 million, and it was estimated that there might also be a saving of about $0.3 million in the main ring due to the slower rise time of the magnetic field. Thus it appeared that the accumulator would not result in a reduction of the cost of the project.

On the other hand, the problems of injecting into the accumulator and then ejecting from it while keeping open the option of injecting into the main ring directly from the booster appeared to be complicated and difficult. This and the very significant complication to the machine, as well as the cost, made it evident that the construction of the accumulator at this time should be rejected. It was decided to keep the "sentiment" of the accumulator as an open option for a later time in order to increase the intensity by

possibly a factor of four. This is slightly different than keeping the option open, for it means that the rather complete engineering study necessary to keep open the option will not have to be made at this time.

The accumulator would have been a more competitive alternative were multi-turn injection into the accumulator considered to be practical[3] and had the idea been considered earlier. In that case, the charge per cycle would be reduced and, since the booster injection energy and aperture are determined by space charge considerations, a considerable reduction in the linac energy might have resulted. For example, two turn injection would imply a linac energy of 120 Mev. However, the state of the art is not quite to the point at which such a gamble would be worthwhile. Hence schemes involving multiturn injection were rejected.

FOOTNOTE AND REFERENCES

*This work was performed under auspices of the U. S. Atomic Energy Commission.

1. An injection storage ring was considered at Berkeley and at CERN in early consideration of their plans for reaching high energy. T. L. Collins also discussed it in the early days of NAL. The idea in the form described here first came to my attention in a letter from D. A. Swenson of September 25, 1967.
2. F. C. Shoemaker, Effect of Pulsed Stray Magnetic Fields on the Injection Storage Ring, National Accelerator Laboratory Internal Report FN-138, April 1968.
3. A. van Steenbergen and R. Billinge, Booster Parameters for 1 or 2-Turn Stacking in the Accumulator, National Accelerator Laboratory Internal Report FN-148, May 1968.
4. R. Billinge, Q. Kerns, L. Teng, G. Tool, A. van Steenbergen, and D. Young, Injection Energy of the 5 Hz Booster, National Accelerator Laboratory Internal Report FN-147, May 1968.
5. William Brobeck & Associates, Storage Ring Cost Estimate, April 17, 1968.

Table I

PARAMETERS OF ACCELERATOR
(L. Teng)

Energy	10 BeV
Average Radius	0.9982 Km
Magnetic Radius	0.8260 Km
Length of bending magnet	29'4"
Length of quadrupole	6'10.2"
Separation between magnets	3"
Cell structure	QF S B B B QD S B B B
Length of S	21.7"
Length cell	194.8'
Super period	Same as main ring
Betatron wave length ($\nu_x = \nu_y \simeq 20.25$)	309.7 m
Number of bending magnets	576
Magnetic field	440.1 G
Current	1779 Å
Number of quadruppole magnets	216
Gradient in quadrupole	69.3 G/cm
Resistance of magnet coil	$3.33 \times 10^{-4}\ \Omega$
Voltage per magnet	0.592ν
Power per magnet	1.054 KW
Total power in magnets	0.8 MW
Magnet gap height	2.0"
Magnet gap width	5.0"
RF frequency	53.242 MHz
Harmonic number	1119
RF voltage	150 KV

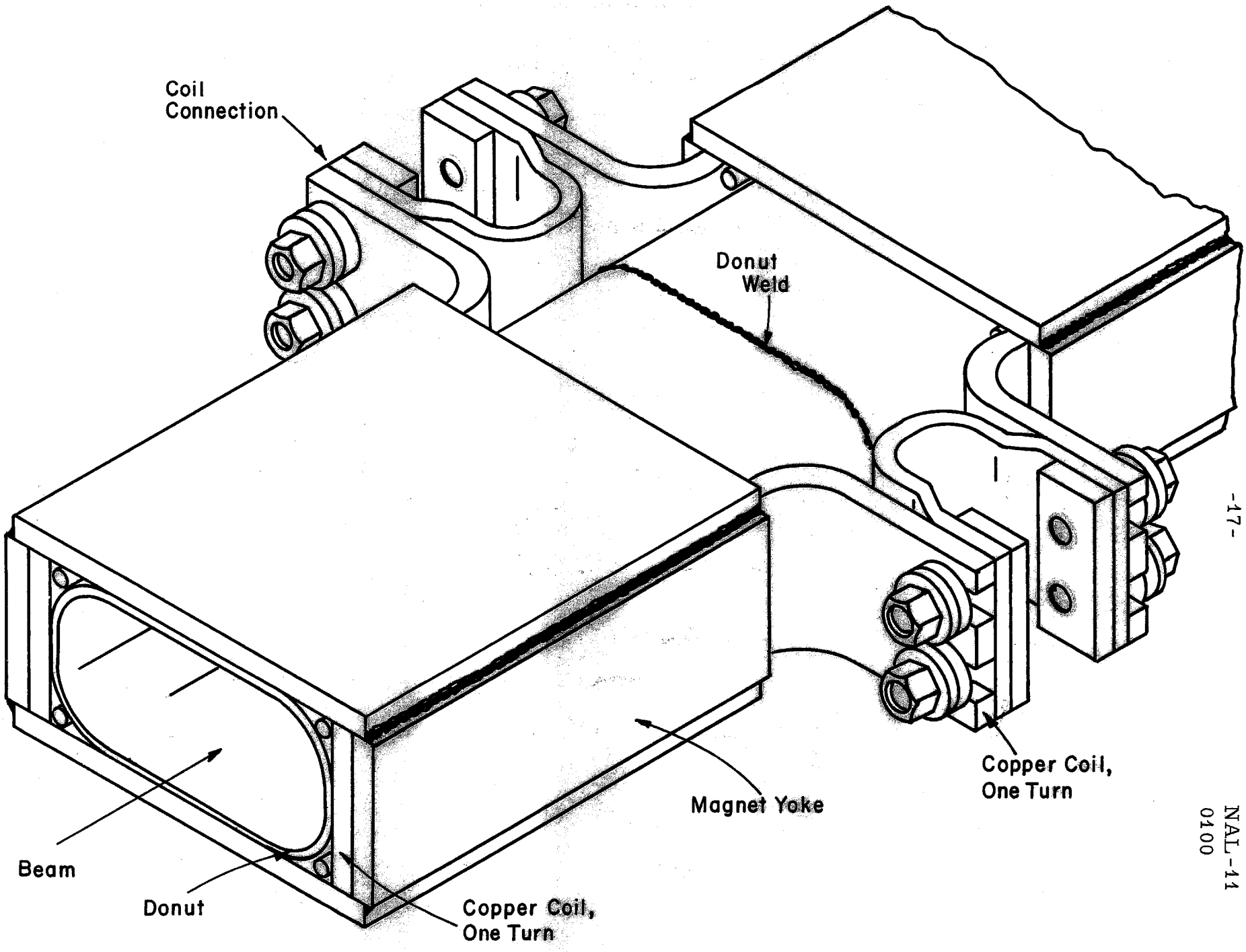

Cross section of a bending magnet which also shows connection between

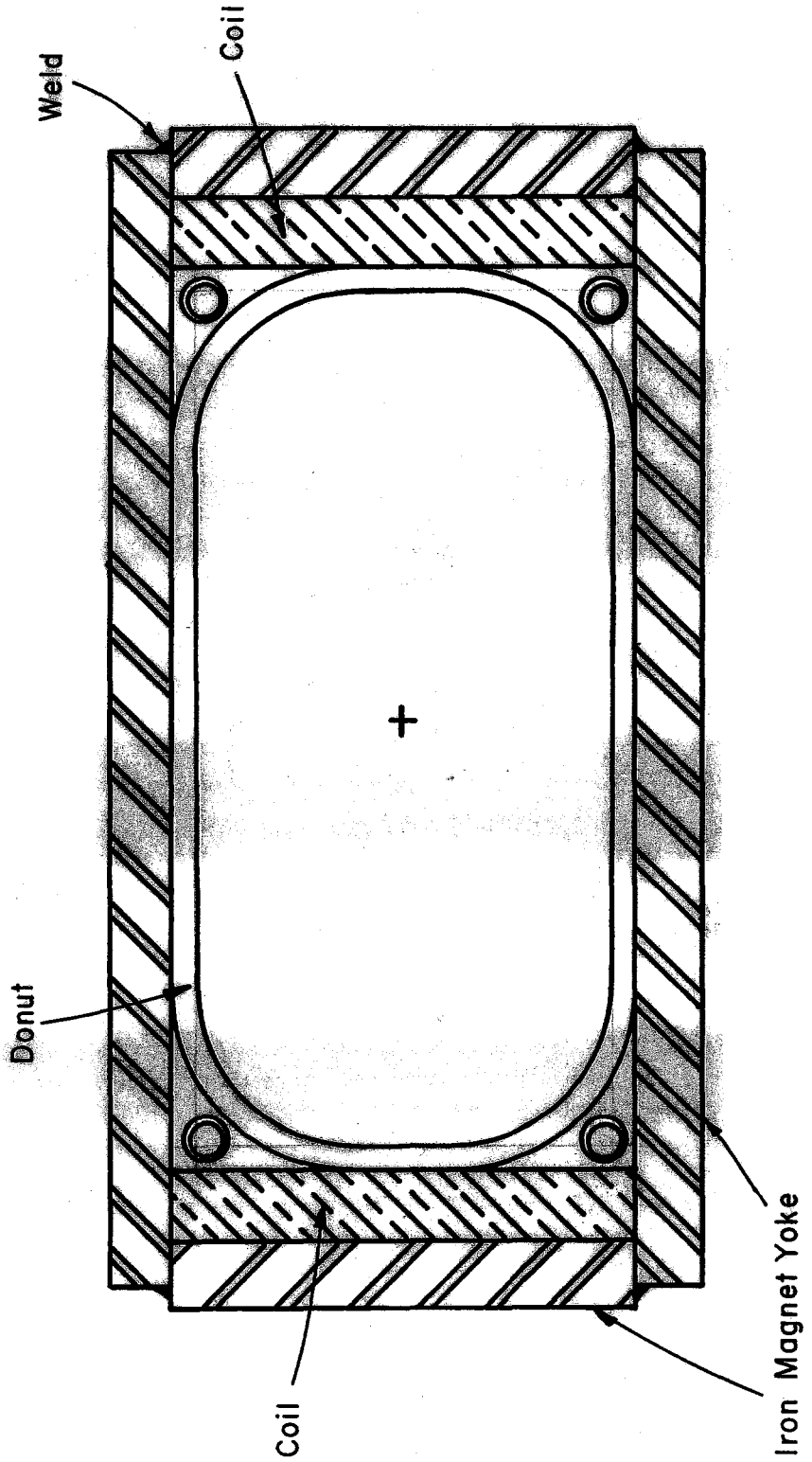

section of bending magnet

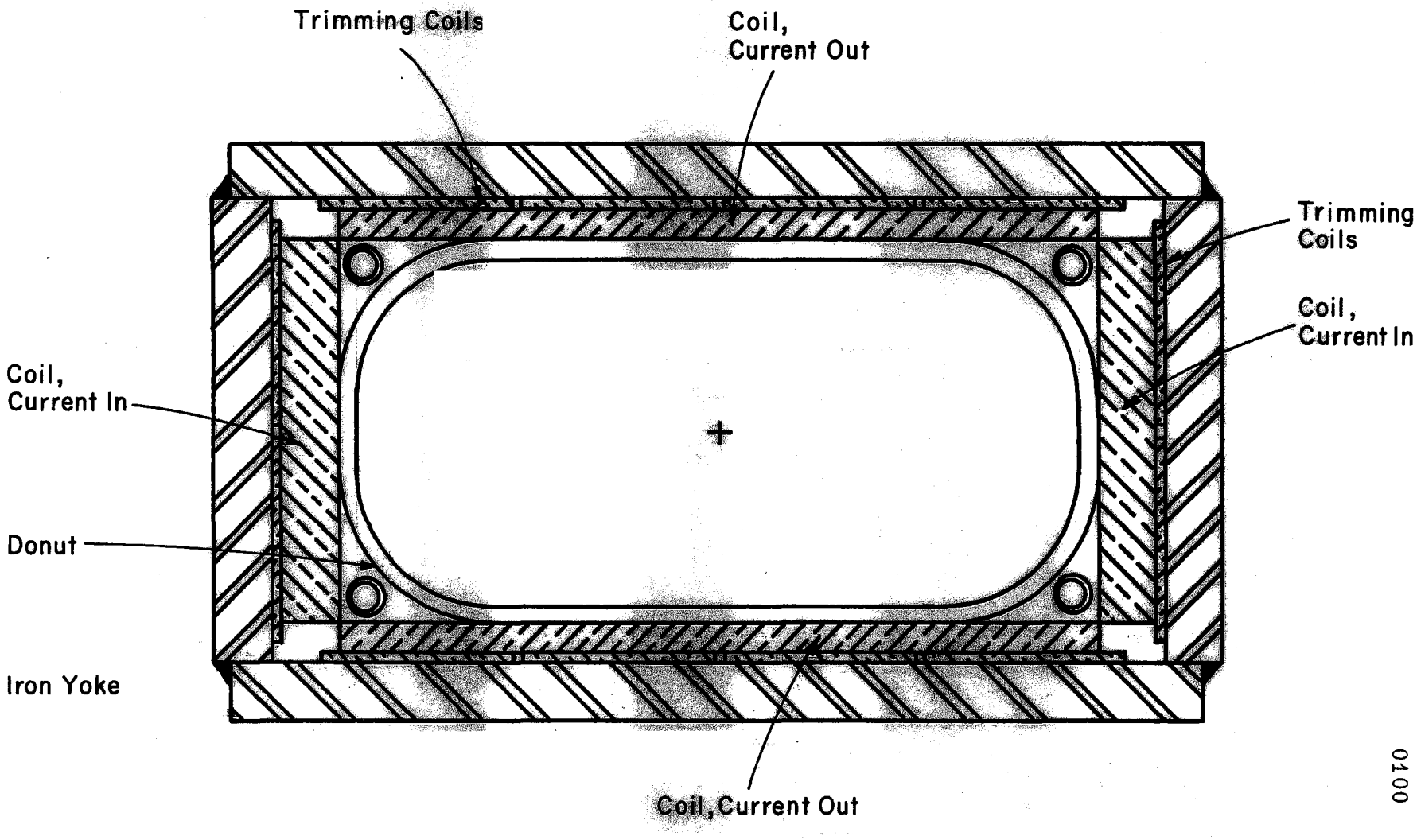

Cross section of quadrupole focusing coil

NAL-11
0100

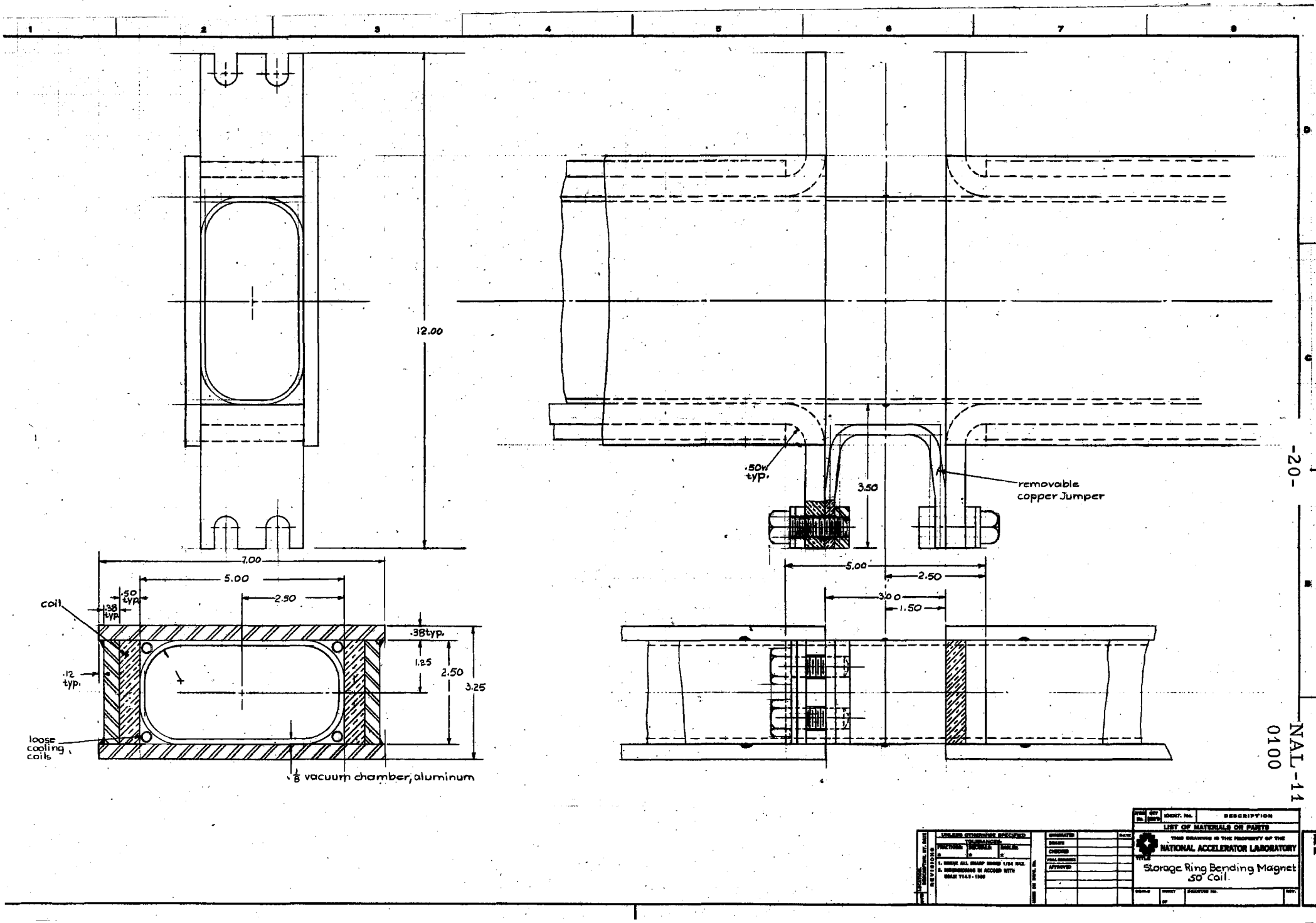
12.00
7.00
5.00
2.50
.50 typ.
.38 typ.
coil
.12 typ.
loose cooling coils
.38 typ.
1.25
2.50
3.25
1/8 vacuum chamber, aluminum
.50R typ.
3.50
removable copper Jumper
5.00
2.50
3.00
1.50
LIST OF MATERIALS OR PARTS
NATIONAL ACCELERATOR LABORATORY
Storage Ring Bending Magnet .50" Coil.

NAL-11
0100

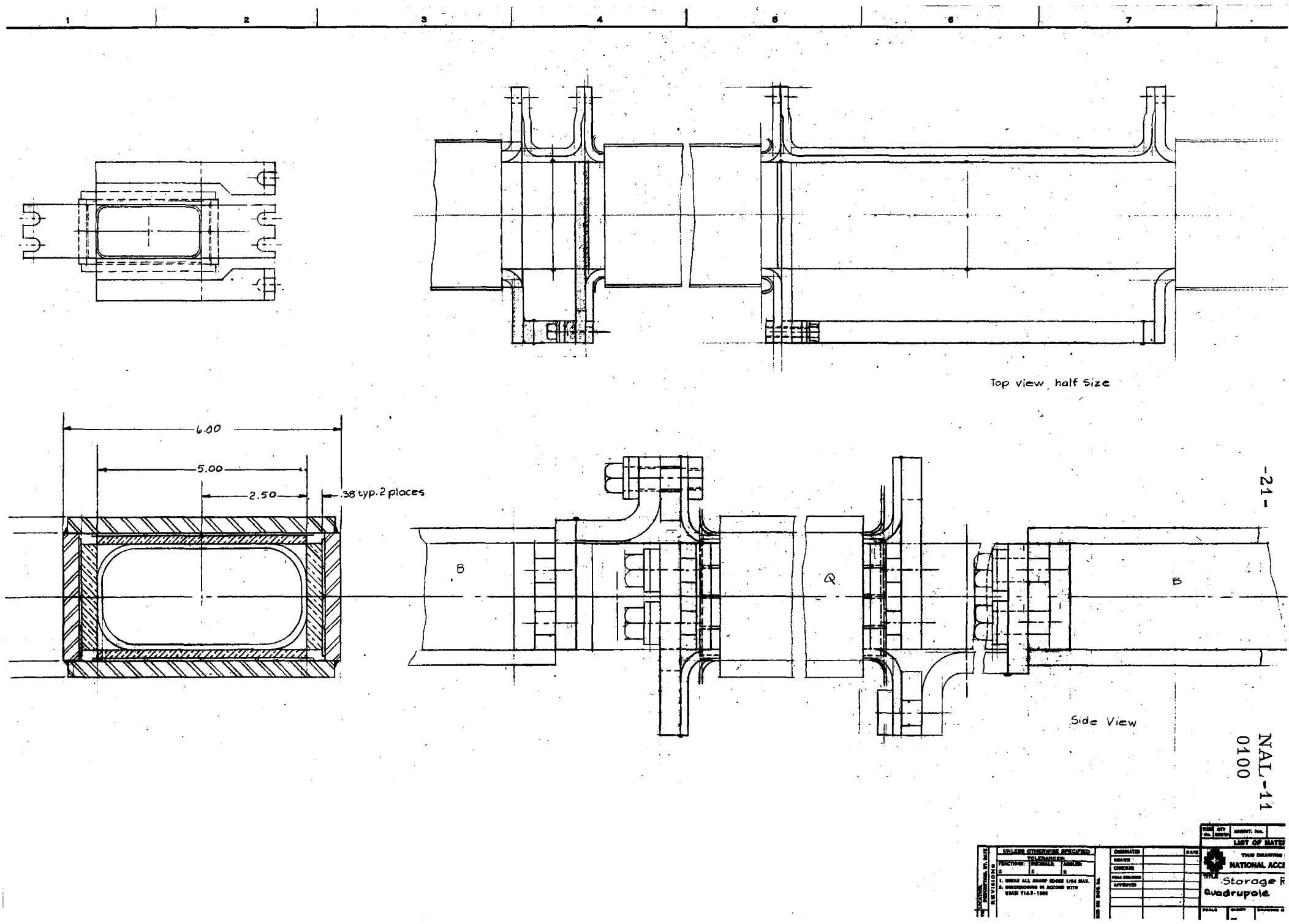
1
2
3
4
5
6
7
Top view, half Size
6.00
5.00
2.50
.38 typ. 2 places
B
Q
B
Side View
-21-
NAL-11
0100
UNLESS OTHERWISE SPECIFIED
TOLERANCES
FRACTIONS
DECIMALS
ANGLES
1. BREAK ALL SHARP EDGES 1/64 MAX.
2. DIMENSIONING IN ACCORD WITH
ASME Y14.5-1966
DESIGNATED
DRAWN
CHECKED
PROJ. ENGINEER
APPROVED
DATE
REVISIONS
LIST OF MATE
THIS DRAWING
NATIONAL ACCE
TITLE
Storage
Quadrupole
SCALE
SHEET