fermilab report

Fermi National Accelerator Laboratory Monthly Report

March 1986

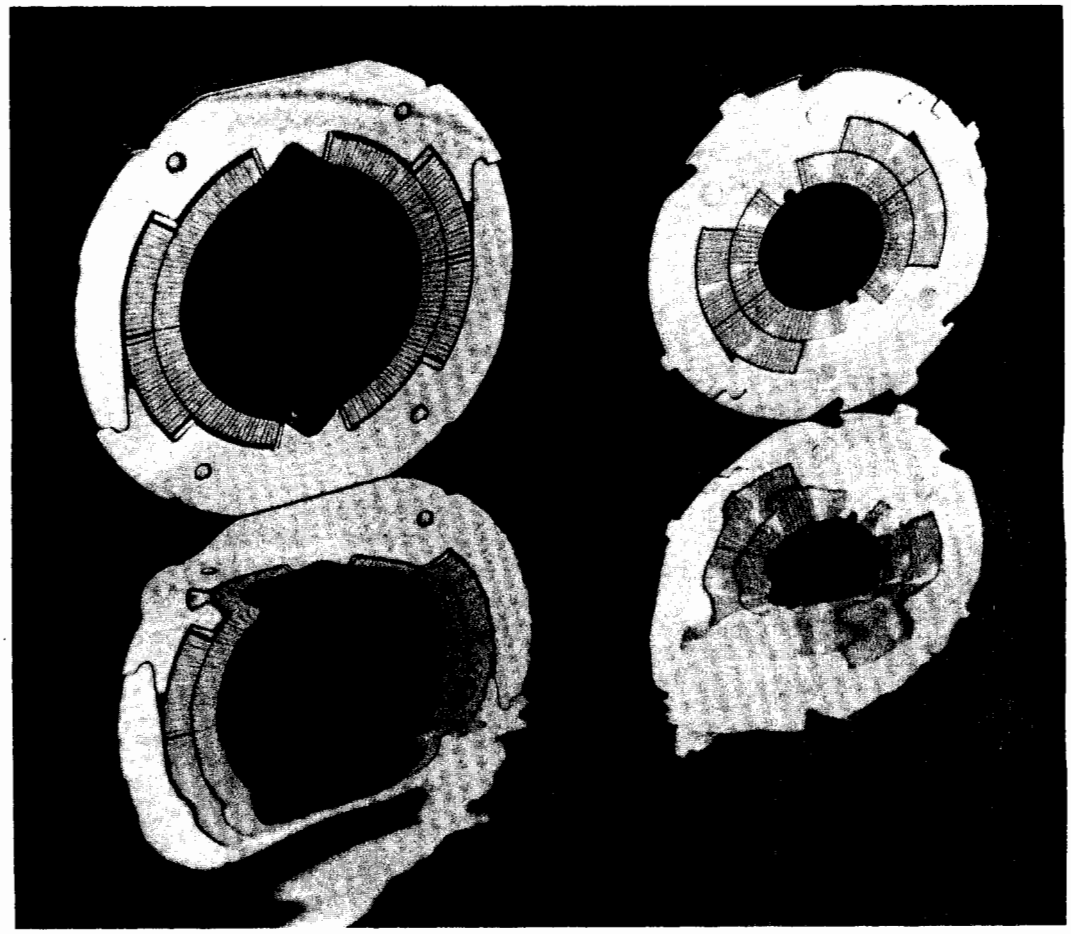

fermilab report is published monthly by the Fermi National Accelerator Laboratory, P. O. Box 500, Batavia, Illinois 60510 U.S.A.

Editors: R. Carrigan, Jr., F. T. Cole, R. Fenner, L. Voyvodic
Contributing Editors: D. Beatty, M. Bodnarczuk, R. Craven, D. Green, L. McLerran, S. Pruss, R. Vidal
Editorial Ass't.: P. Roberts

The presentation of material in **fermilab report** is not intended to substitute for or preclude its publication in a professional journal, and reference to articles herein should not be cited in such journals.

Contributions, comments, and requests for copies should be addressed to the Publications Office.

FERMILAB-86/3 **Fermi National Accelerator Laboratory** 0090.01

THE COVER: *A section of the TEVATRON collared coil (left) with its linear descendant, the SSC collared coil. A report on magnet selection for the "Good Field" SSC begins on page 1.* *(Fermilab photograph 86-203-9)*

The Good Field SSC 1
Paul M. Mantsch

Research Division Shutdown Highlights;
Craftsmen and Scientists at Work 8
Mark W. Bodnarczuk

August J. Mier; 1892-1986 25

Notes and Announcements 26
Continuation of the Director's Special Colloquia
on Topics in High-Energy Physics...
Workshop on Antimatter Physics at Low Energy...

Manuscripts, Notes, Lectures, and Colloquia Prepared or
Presented from February 24, 1986 to March 23, 1986 27

Dates to Remember 30

THE GOOD FIELD SSC

Paul M. Mantsch

In the late spring of 1982, a summer study was held in Snowmass, Colorado, to ponder the national program for elementary particle physics and future facilities. At that watershed meeting a 20 TeV-on-20 TeV proton-proton superconducting collider was proposed as the next major research tool and studied seriously for the first time. The project gathered momentum and soon became part of the national science agenda. A detailed conceptual design has just been completed and awaits consideration by the Department of Energy and the Congress.

At Snowmass '82, and over the subsequent months, the feasibility of the new machine was examined and its major components studied in detail. Since the magnets of the main collider ring were the single most costly part of the project, magnet design became a major preoccupation. There seemed to be no limit to imaginative magnet design ideas proposed during those first few months. It wasn't long, however, before the Rocky Mountain High was sobered by hard reality. The vision of one-turn magnets hundreds of feet long assembled by robots in the tunnel faded as the sunset behind the snow-capped peaks.

It became clear that a device which would cost in the billions of dollars, built on an ambitious schedule, had to be based on proven concepts. Magnet designs began more and more to resemble those that were known and loved. The spectacular success of the TEVATRON had demonstrated the soundness of its magnet. The TEVATRON served, in fact, as a basis for much of the design of the new collider. Thinking at Brookhaven National Laboratory (BNL) was guided by the later, highly successful CBA designs. The magnet which was ultimately chosen for the Conceptual Design is really a synthesis of the best features of early designs adapted to the special requirements of the new machine.

Magnet Design Criteria

Operating such a huge machine would be inconceivable without superconducting magnets. Yet even with magnets like those in the TEVATRON, such a machine would require more than half a giggawatt of electrical power for refrigeration. Cryogenic performance of the magnets, therefore, was emphasized from the beginning.

Since a collider is at full field most of the time (tens of hours), magnet ramps are infrequent and can be slow (tens of minutes). With eddy current heating minimal, the static heat load dominates the refrigeration requirement. The magnet cryostat must be, therefore, carefully designed to minimize the heat leak (perhaps ten times less than the TEVATRON). This requires that the cryostat have sufficient space to accommodate the necessary radiation shielding and long heat path support for the coil

system at liquid helium temperature. The resulting cryostat is significantly larger in cross section than that used in the TEVATRON.

Magnet aperture and length are obvious cost-sensitive design features. Of these, aperture has the greatest cost impact. Since the superconductor required at a given field level is proportional to the inside diameter of the coil, effort to reduce aperture while maintaining good field quality has a substantial payback. The conductor is a large part of the cost of a superconducting magnet. In the TEVATRON, for example, the superconductor cost constituted one-third of the total magnet cost.

Improvements to the superconductor itself can also reduce cost. Fortunately, superconductor technology was on the verge of a breakthrough in the current-carrying capacity of superconducting wire. It is now expected that the new conductor will carry 60% more current than that used in the TEVATRON. These improvements in conductor can be used either to increase the strength of the magnet field or to reduce the quantity of superconductor in the coil, both of which lead to overall cost reductions. To put the superconductor cost into perspective, one must realize that the reduction in cost of a foot of superconducting cable by one cent will save a million dollars on the cost of the machine.

Substantial savings can be accrued both in labor and materials by having fewer ends, i.e., longer magnets. Roughly 30% to 40% of the cost of a TEVATRON dipole was related to the ends. The curvature (sagitta) of a Superconducting Super Collider (SSC) dipole required to keep beam trajectory in the magnet is quite small (0.5mm sagitta per meter of dipole length). The only restriction on length, therefore, is that the magnets must be transportable from the manufacturer to the machine site.

Attention to the simplicity of the ends is important. The transition from magnet to magnet should be as smooth as possible. Cryogenic fluid passages and radiation shields should be straight with a minimum of welds. Ends built up in such a fashion are not only cheaper and more reliable, but cryogenically more efficient.

Magnet Design Evolution

Once the basic requirements for the SSC magnets became clear, groups at the national laboratories (BNL, Lawrence Berkeley Laboratory, and Fermilab) started magnet development programs. This work consisted primarily of improvements to designs already existing or under development.

An early proposal was to take advantage of the simplicity of iron-dominated superconducting magnets. These magnets (often called superferric) operate near the saturation point of iron (about 2T) where the field is shaped by the geometry of the

iron. The placement of conductors is therefore not critical and the rectangular coils are easy to support. It was originally hoped that magnets could be made on site to any convenient length, perhaps as long as 100 meters.

The Texas Accelerator Center (TAC) was set up to develop the concept of the superferric magnet. The final design, shown below, has two magnetically independent apertures in a common cryostat.

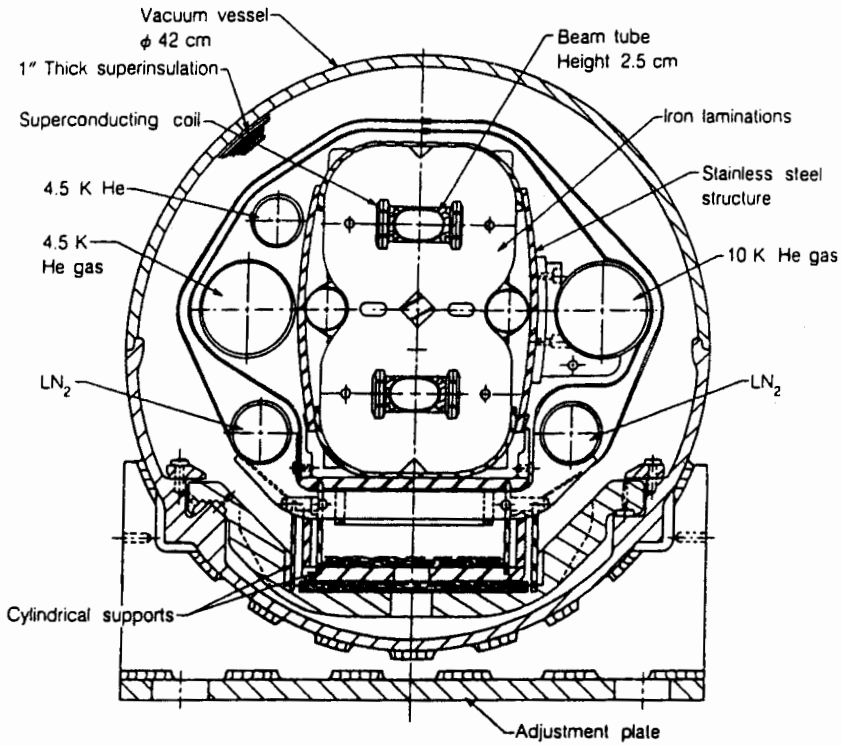

The two-in-one 3T superferric magnet.
(Source: SSC Central Design Group)

The operating field was raised to three tesla. Even though this field was well beyond the onset of saturation in iron, the required field quality was achieved by segmenting the coil into blocks with differing currents. Several models were built, including two that were 28 meters long.

The initial work at Lawrence Berkeley Laboratory (LBL) concentrated on developing a high field magnet (8-10 tesla) to be operated at a temperature of about 2 degrees kelvin (2K). The

technology of 2K cryogenic systems seemed sufficiently uncertain that emphasis shifted back to 4.5K designs. Later, LBL joined Brookhaven in an R&D collaboration.

At Brookhaven, a program was started to try to make use of the high current capability of niobium tin (NbSn) conductor in a magnet style based on successful work done on the CBA. A scheme having two magnetically coupled apertures was adopted. Although savings using NbSn were attractive, the mechanical properties of the conductor made the coil tricky to wind. In the interest of getting reliable large-scale models built on a timely schedule, the effort shifted back to the traditional niobium-titanium conductor. At about this time, LBL and BNL joined forces and undertook yet another refinement. Fermilab-style stainless steel collars were added to support the coils. In previous models, the coil had been supported directly by the yoke iron. The final BNL/LBL two-in-one magnet design is shown below.

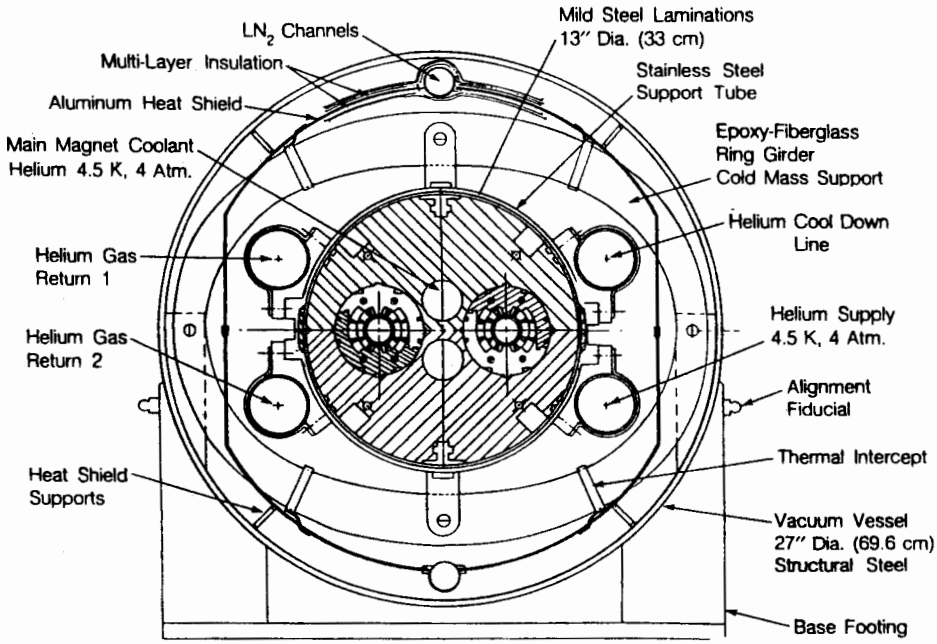

BNL/LBL two-in-one high-field magnet.
(Source: SSC Central Design Group)

After a brief study of superferric magnets, the Fermilab magnet designers concentrated on adapting the successful TEVATRON design to the task. The two-shell, helium-permeable, collared coil was taken as the starting point. The iron yoke and cryostat arrangements took many forms. An early decision was to design

one-aperture magnet so that the two rings would be magnetically and cryogenically independent. This seemed to be an imperative requirement both for viable accelerator operation and for an efficient cryogenic system. From a cryogenics standpoint, cold iron presented difficult problems. Also, the cryostat had to carry large diameter pipes. The solution was to use the vacuum vessel as a magnetic shield. The cryogenic piping and radiation shields could then be carried between the coil and the vacuum vessel. The "no-iron" design, pictured below, was compact, easy

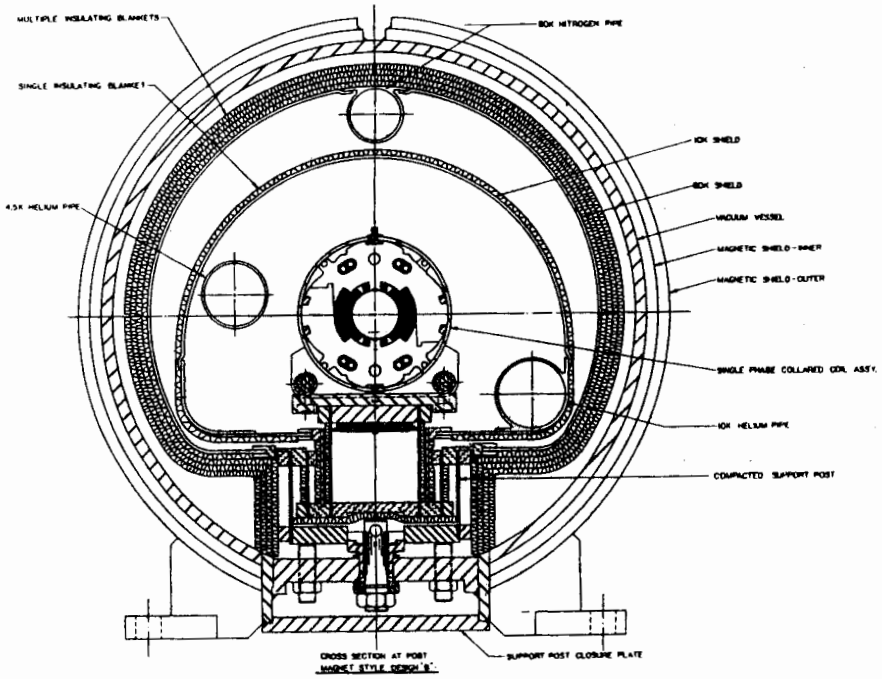

The Fermilab "no-iron" magnet.
(Source: SSC Central Design Group)

to fabricate, and avoided the problem of cold iron. One 12-meter no-iron model, with a dummy coil, was built to test the cryostat features, and another magnetic model, six meters long, was also constructed. These two models demonstrated the viability of the no-iron design. A great deal was also learned about general problems of low heat-leak cryostat design.

At this point (January of 1985) an agreement was entered into between Fermilab, LBL, and BNL to collaborate on a new magnet design incorporating some features of the LBL/BNL two-in-one cold-iron magnet and the Fermilab one-in-one design. The result-

ing magnet was a high-field (6.6T) one-in-one magnet with a collared coil surrounded by cold iron. The cryostat used for the Fermilab iron-free magnet was redesigned for the cold-iron magnet. The suspension for the coil is a folded-post type consisting of a series of fiberglass reinforced epoxy and stainless steel cylinders. The support is simple and strong, and yet has very low heat leak. The collaboration's design is shown below.

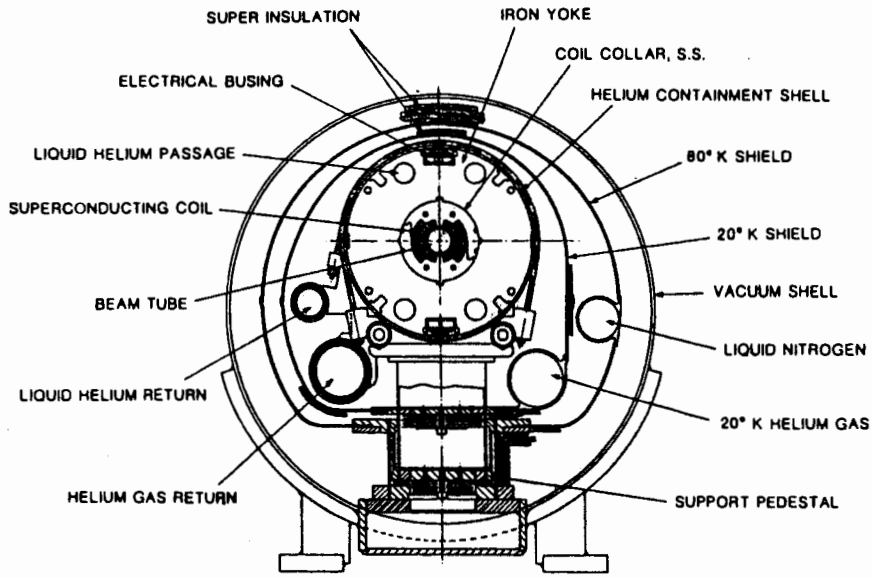

The LBL/BNL/Fermilab high field, one-in-one magnet design, chosen for the SSC Design Report. (Source: SSC Central Design Group)

Magnet Selection

The Central Design Group for what became officially known as the Superconducting Super Collider set a series of goals for the project. October 1985 was set as the goal for the selection of a magnet style. A magnet selection panel was chosen. Although there were nominally four magnet styles to choose from, only the LBL/BNL/Fermilab high-field cos θ magnet and the TAC superferric magnet were under serious consideration. Cost estimates were developed by the proponents for all of the magnet types. General Dynamics and Westinghouse prepared independent cost estimates. Total project costs were determined for each style to include tunnel costs for valid comparison.

After several days of presentations and discussion, the Magnet Selection Panel decided in favor of the high-field cosθ magnet. Their decision was based primarily on the proven success and experience with that magnet type. They also favored the argument that separate magnets for the two beams were preferable

for tractable operation of the machine. When the costs of cos θ and a one-in-one version of the superferric magnet were compared, there was little difference.

Future Plans

Once the magnet decision had been made, a program was started to build a series of full scale (16.6 meter) magnet models. Four models of the present design are currently under construction. The coils are being wound and assembled into magnet cold mass at Brookhaven. Fermilab will supply cryostats and will make the final assembly. The models will be individually tested at the Fermilab Magnet Test Facility and later in a string at a new enclosure at the E4 service building on the Fermilab Main Ring. The string test will exercise magnet-related systems as well as the magnets themselves. the first coil is expected from Brookhaven at the end of April. By the end of June, the first magnet should be ready for test. The next generation of models will include refinements as the design evolves. Over the coming year the magnet fabrication will be transferred to industry in anticipation of the first pre-production run of perhaps a hundred magnets.

The future of SSC depends on many considerations: scientific, technical, and, of course, political. When the decision is made to proceed, however, the magnets will be ready for the Good Field SSC.

RESEARCH DIVISION SHUTDOWN HIGHLIGHTS; CRAFTSMEN AND SCIENTISTS AT WORK

Mark W. Bodnarczuk

> "Empedocles was wrong in speaking of light as 'traveling,'...its movement being unobservable by us; that view is contrary both to the clear evidence of argument and to observed facts; if the distance traversed were short, the movement might have been unobservable, but where the distance is from extreme East to extreme West, the draught upon our powers of belief is too great."
> (*On The Soul*, 418b, 20-26; Oxford Edition)

In the above quote, Aristotle dismisses Empedocles' claim that the motion of light is unobservable primarily because of the vast distance it travels across the horizon without an observer detecting any motion. Viewed anachronistically from our present understanding of the speed of light and relativistic effects, we would naturally side with Empedocles. The above dialogue is representative of some of the earliest efforts (in Western civilization) at studying and explaining natural processes by specific "sciences" rather than attributing natural phenomena to the whims of mythological "gods". But who were the characters that played out these earliest of scientific dramas? It is important to note that science was carried out exclusively by a small group of erudite thinkers without assistance from those outside the scientific/philosophical community.

Physics has come a long way since the time of Aristotle. It was Galileo Galilei (1564-1642) who insisted that the "Book of Nature" was written in mathematical characters, dethroning Aristotle's dialectical logical/verbal method of doing science after an 1800-year reign. This ushered in the modern era of scientific inquiry that was driven by the "experiment" rather than rhetorical arguments and syllogistic logic. This macrocosmic paradigmatic shift changed the course of science forever. But one thing remained largely unchanged. The modern scientist did most of the work of science himself. He devised theories and built the tools needed to do experiments, functioning as scientist, inventor, and technician. As the scope of scientific experiments became larger and more complicated, scientists began to call upon craftsmen, those outside the scientific community, to help them build the tools and develop the technologies they needed to do their research.

Craftsmen have played an important role in many other fields as well. Robert R. Wilson has compared building accelerators to building cathedrals because cathedral design pushed the architectural technology of the day to its limits. But behind each

architect stands a myriad of craftsmen who actually did the work, laying hundreds of seemingly unrelated stones in a beautifully choreographed effort that culminated in a unified structure.

In much the same way, modern-day high-energy physics experiments call upon a large support structure of craftsmen, technicians, and engineers to design, fabricate, and install the seemingly unrelated devices that compose an apparatus used at Fermilab. These people remain the "unsung" heroes behind physics publications. In a sense, watching shutdown activities at Fermilab is like peering into a small window of history, for it is during shutdown periods that we witness an important part of the history of science in progress; newly-designed beamlines are installed, civil construction is in full swing, beamline transport systems to monitor, energize, and cryogenically cool beamlines are fabricated, assembled, and tested with high precision. Behind all these accomplishments stands a legacy of craftsmen who are not scientists. This collection of pictures and captions attempts to focus attention on a few shutdown highlights in the Research Division, and on some of the people who are performing the tasks.

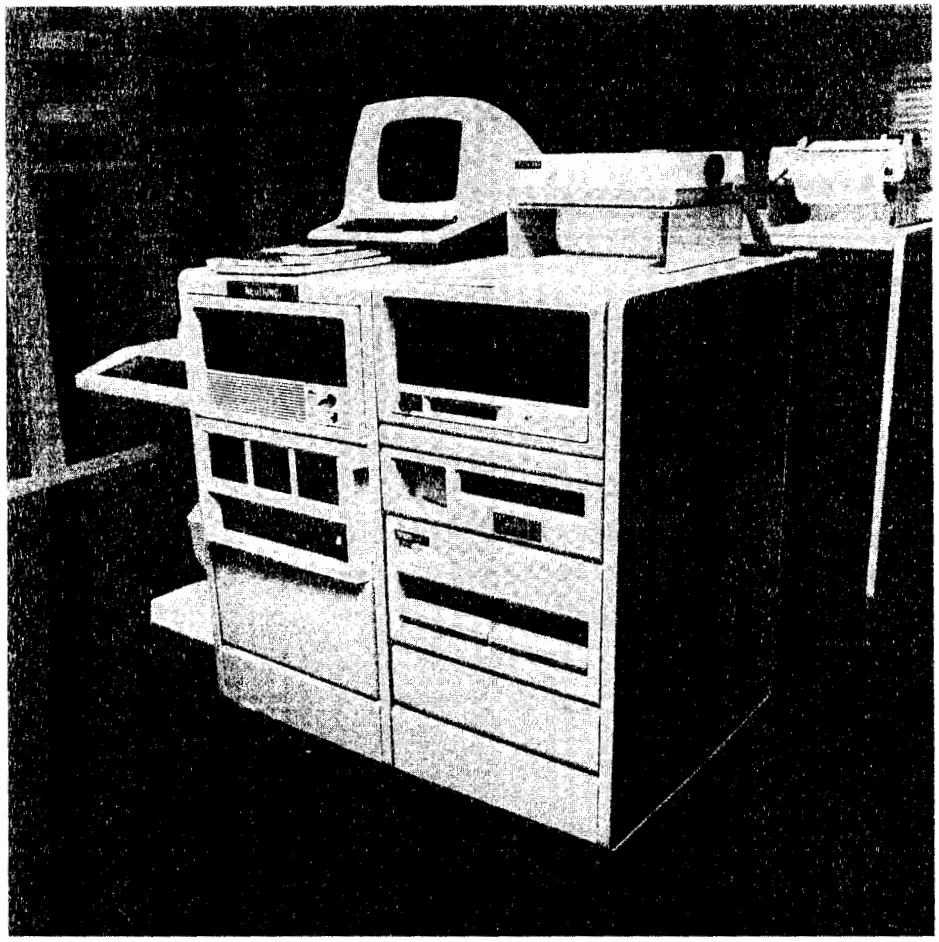

Under the direction of the Research Division (R/D) Operations Department, the Meson and Neutrino EPICS controls systems were recently moved from the 13th floor of Wilson Hall to the R/D Operations Center. The new location will allow direct terminal hook-up, faster response time on the CAMAC serial link in the Operations Center, and local access for trouble-shooting systems problems. (Fermilab photograph 86-141-6)

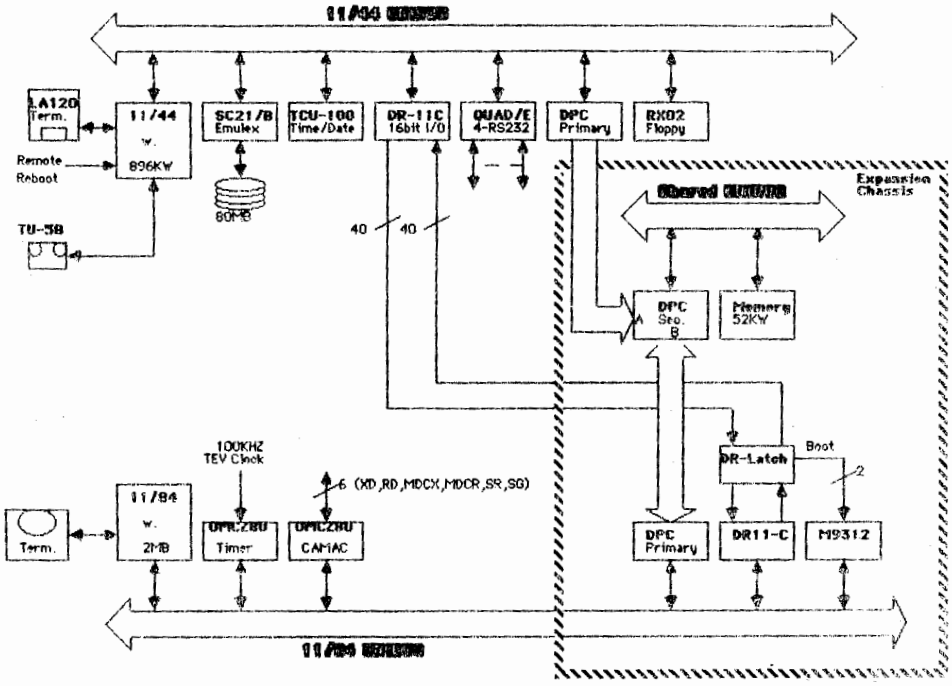

BCS-11/44/84 1/8/86
System Configuration Ron C.

A schematic drawing of the EPICS control system upgrade. The PDP11/84 pictured above with its 22-bit address and up to 4-Mbyte memory capacity replaces the smaller 18-bit address, 256-Kbyte PDP11/34. One of the advantages of the new 84 is its private memory bus. Formerly, when the UMCZ80 CAMAC controller addressed the PDP11/34 it became "bus master" tieing up the bus for the duration of the cycle. Now, when the CAMAC controller addresses the PDP11/84, it only ties up the 18-bit unibus, allowing the 22-bit private memory to continue executing operations. The new system processes CAMAC through-put at about twice the speed of the old system. The upgrade was a collective activity of the R/D Operations and Electronics/Electrical Departments.

Mike Masci[illegible] supervises the construction of the new M-Polarized (MP) target pile in the Meson Detector Building. The conception, design, and engineering of this type of target pile originated in the R/D Mechanical Department. This is the last in a series of target piles built as part of the Tevatron II project. It will service the new M-Polarized proton beam which is scheduled to run tests during the 1987 running period. (Fermilab photograph 86-142-2)

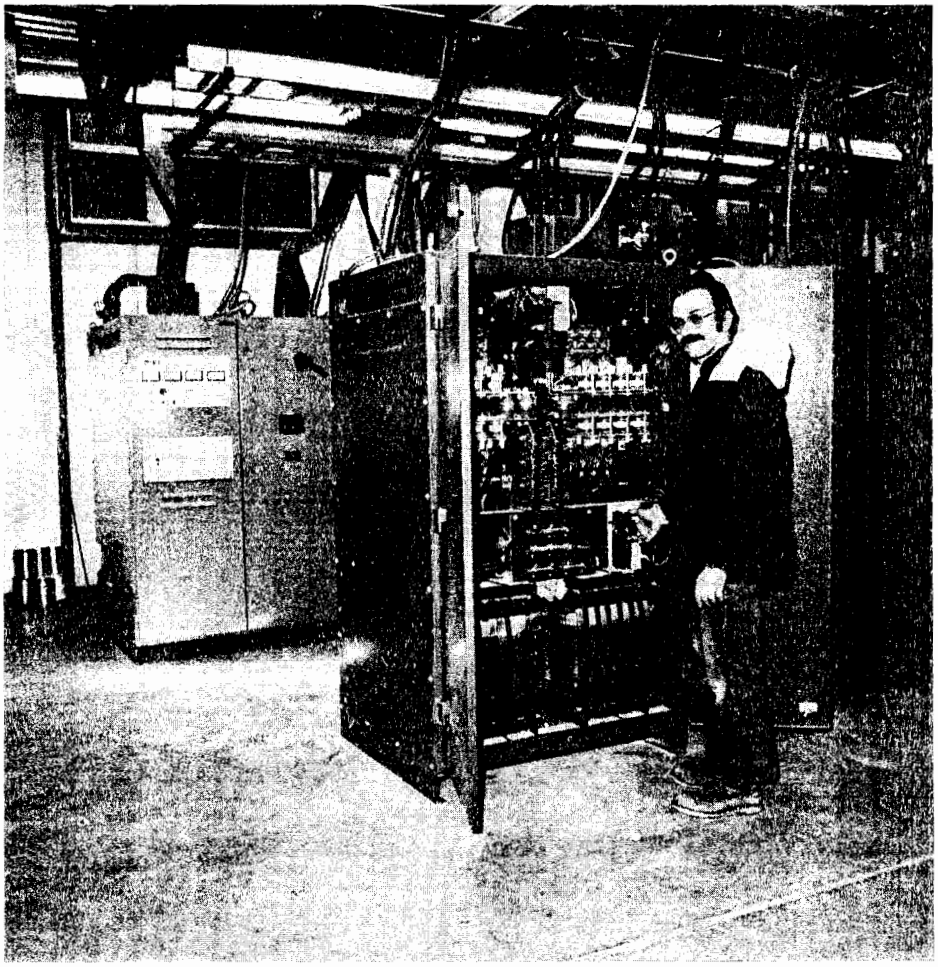

Walt Jaskierny (R/D Electronics/Electrical Department) opens the back of a Trans-Rex 240 KW power supply in the Proton Area. The power supply in the background is one of 32 new PEI 500 KW power supplies currently installed in the Experimental Areas. Along with magnet tests, a multitude of upgrades and component modifications, and routine maintenance, the Power Systems Group insures the reliable operation of over 400 magnet power supplies throughout the Experimental Areas. (Fermilab photograph 86-143-3)

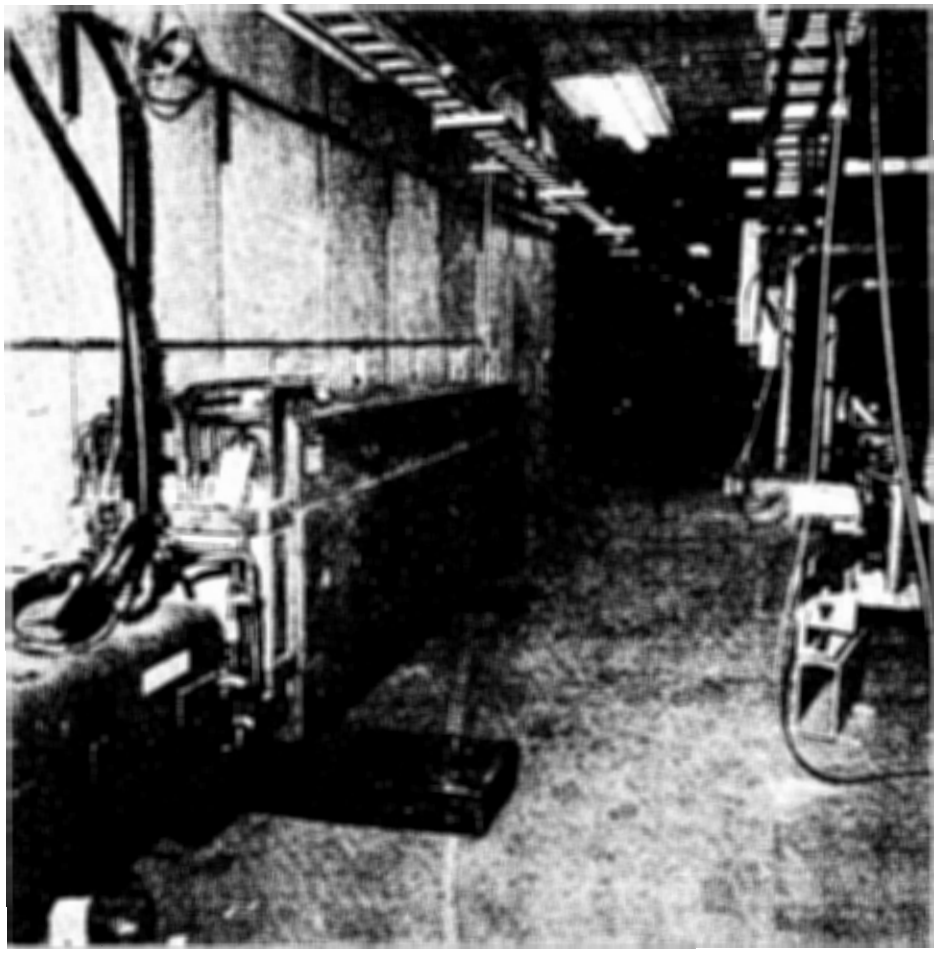

The picture above shows installation of the new N-East beamline transport system in the Neutrino Area. The installation of beamline components is progressing under the direction of the R/D Experimental Areas Support Department. Also, the R/D Mechanical Department is fabricating magnet stands needed to support the magnetic elements. This project will convert the N-East beam from a proton to a pion beam. The new beam will service experiments located in Lab D. (Fermilab photograph 86-143-10)

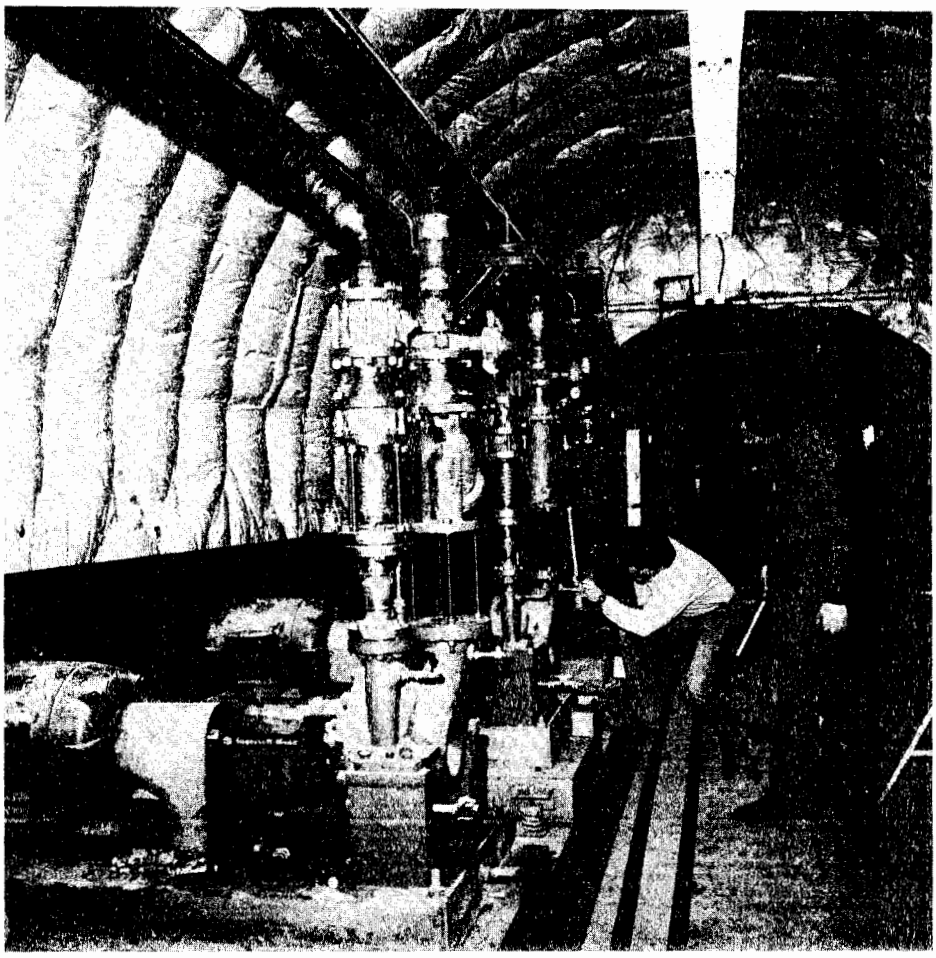

Under the direction of the R/D Experimental Areas Support Department, pipe fitters are at work on the new industrial chilled water (ICW) system in MS6 of the Meson Area. This system will service the new M-West and Polarized secondary beamline enclosures and the M-West and Polarized experimental halls. Similar systems will be installed at Lab D in the Neutrino Area and the High Intensity Lab in the Proton Area. The Neutrino and Proton Area installations are part of an energy management plan which will replace low conductivity water (LCW) cooling towers by pumping ICW from Casey's Pond. The conversion to ICW will save on power costs, having about a 4 year pay-back period.

(Fermilab photograph 86-143-11)

Ray Yarema (R/D Electronics/Electrical Department) examines the circuitry of a board which uses the new surface mount technology. Surface mount components are mounted using a special solder paste rather than using pins that penetrate the board. Because the components are smaller than standard components, thousands of them can be mounted on both sides of a board. Although surface mount technology has been used before both by other laboratories and the electronics industry, its use here at Fermilab represents the largest application of this technology anywhere in the United States. The board being examined contains 2200 components all of which are mounted on a single side of the board. Surface mount amplifier-shaper discriminator boards are currently being used for the Vertex Time Projection Chamber, the central tracking chambers, and the forward tracking chambers of CDF. (Fermilab photograph 86-141-1)

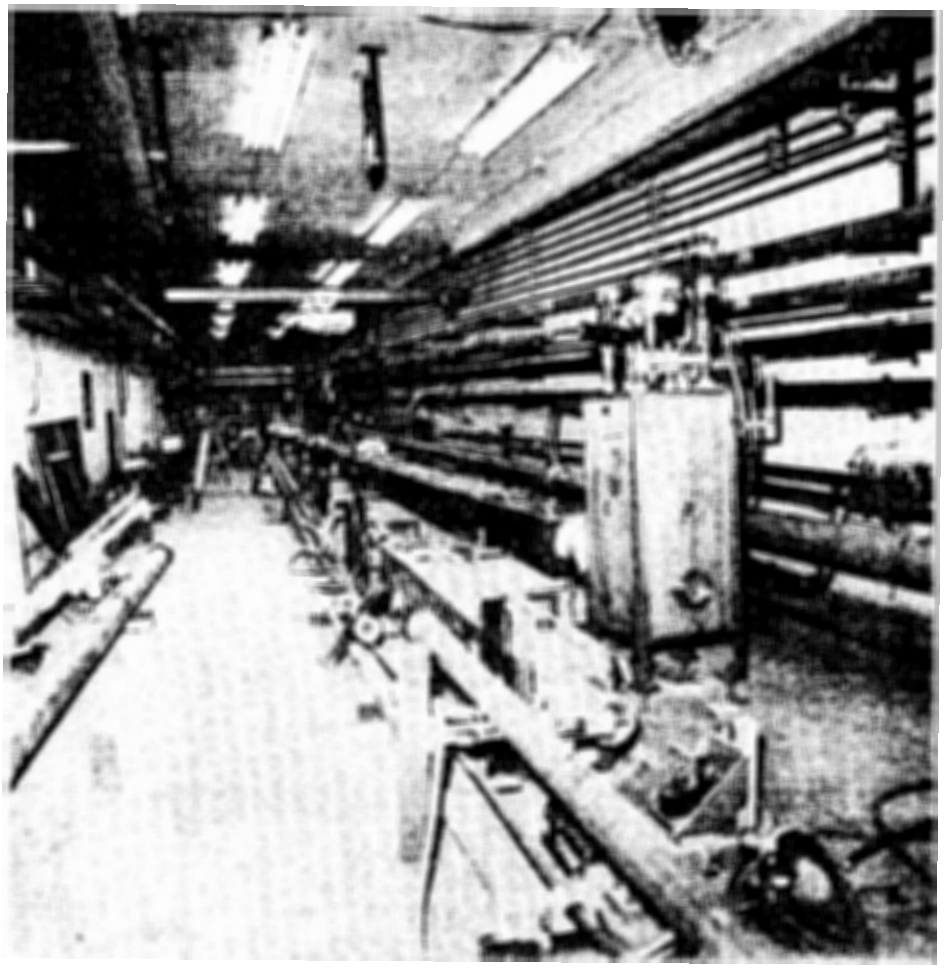

Pictured above is a new energy saver dipole (ESD) bend string which will service the new M-West beamline in the Meson Area. Downstream in MP2 a string of 4 ESD magnets is being installed for the new M-Polarized proton beamline. Both systems will be operational by mid-summer. Further downstream in the Polarized Beam, a second string of 4 ESD magnets has been completely installed and is currently under vacuum. All Meson cryogenics systems will be completed by mid-summer, at which time the Cryogenics Department will begin a shakedown run in preparation for the 1987 fixed-target physics run.

(Fermilab photograph 86-142-6)

Jerry Morris and Ed Justice (R/D Cryogenics Department) work on part of the cryogenics system of the new Wide Band beamline. Following last year's commissioning and operation of the Wide Band beamline, the Cryogenics Department installed and operated a second compressor which services this ESD bend string. The department is currently performing a diagnostic and measurement run, attempting to measure the capacity of the refrigerator and overall system, tune control loops, and detect and repair system leaks. (Fermilab photograph 86-141-10)

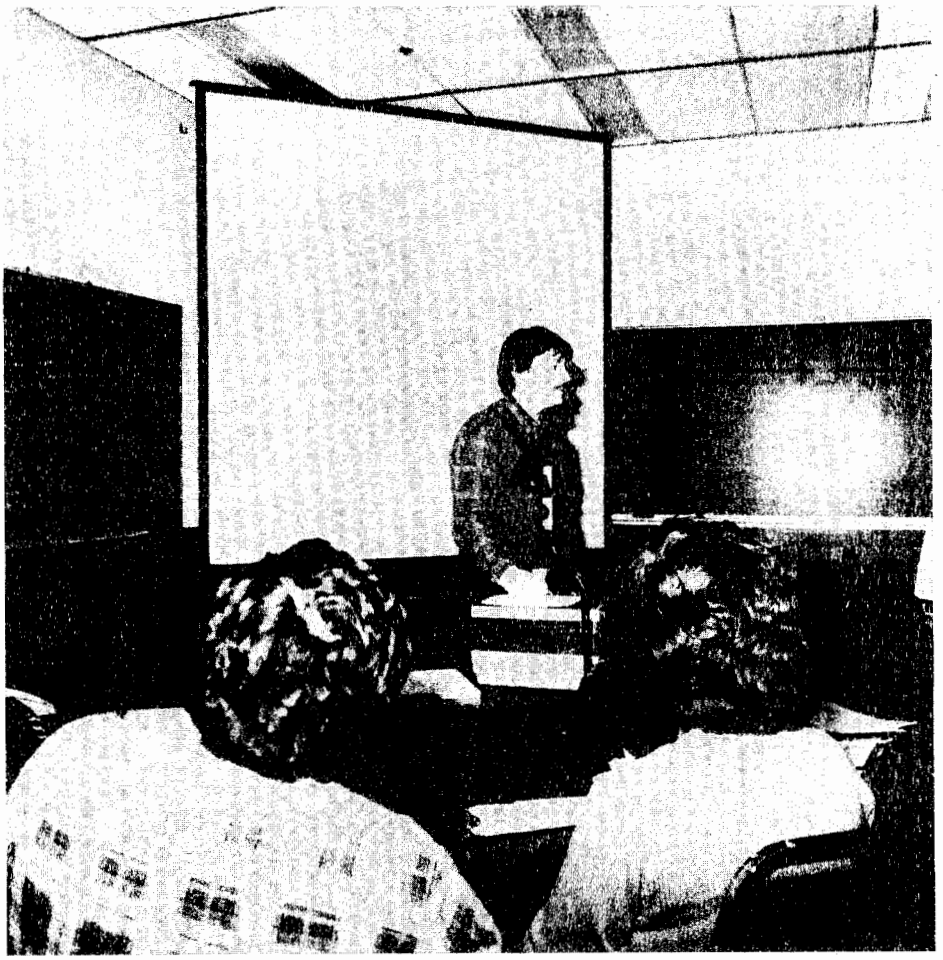

Rich Stanek (R/D Cryogenics Department) delivers a cryogenics lecture to the R/D Operations Group. All R/D operators are being trained to execute first level trouble-shooting of the Experimental Areas cryogenic systems. In addition, most cryogenic monitoring status' are being moved to a central location in the R/D Operations Center. Each cryogenics system is controlled by one or more modified Apple computers which display status' locally at each system location. The Apple computers will now be linked to the PDP11 EPICS control system and most status' brought to the Operations Center. This will enable operations personnel to monitor most cryogenics systems remotely, bringing decreased response time when a component fails.

(Fermilab photograph 86-125-2)

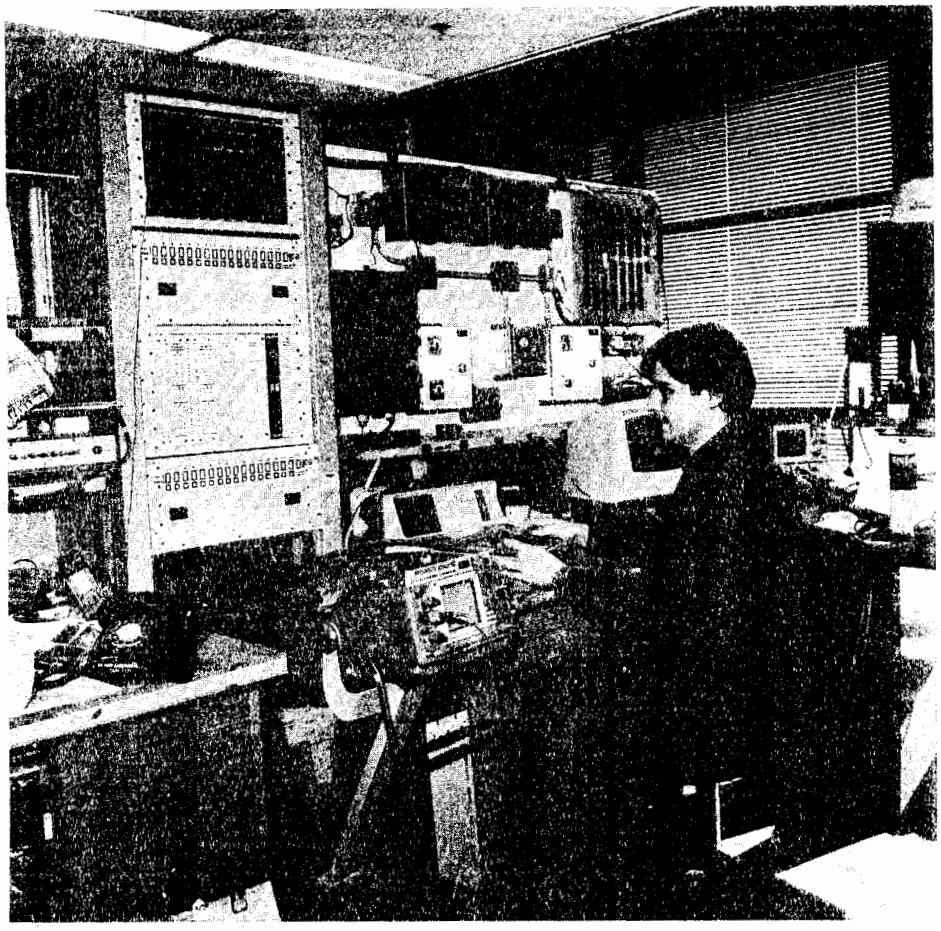

Mark Obrycki (R/D Electronics/Electrical Department) operates the test station for the new R/D radiation interlocks system. The Control and Interlocks Group is installing the new solid state system throughout the Experimental Areas. They have recently completed installation and testing in the primary enclosures of the Meson Area. The new system has several advantages over the older relay based system: (1) It's modular, allowing technicians to add or delete gates leading into enclosures from the system loop without major systems revisions, (2) The gate sensors use a modulated infrared signal, eliminating the old micro-switch sensors which could fail mechanically at any time after having tested the electronic components of the system, (3) The wiring to all three Experimental Areas enclosures is identical, enabling technicians to trouble-shoot systems problems

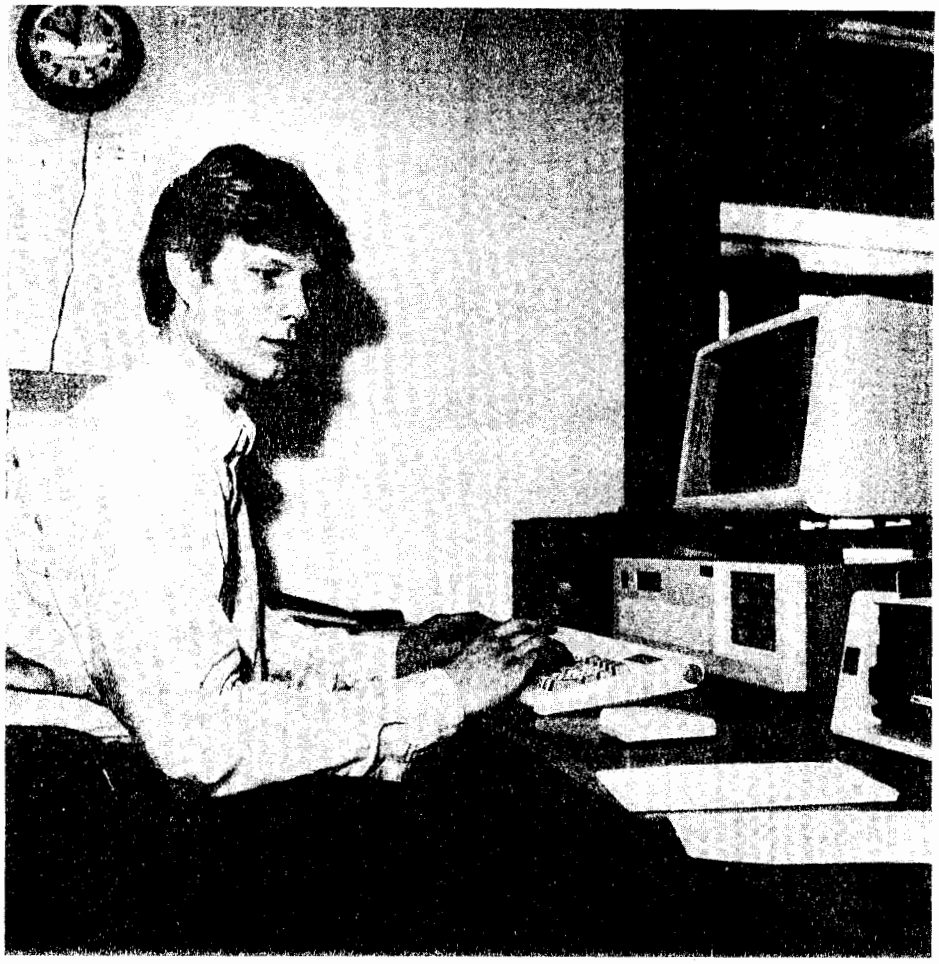

Dan Graupman (R/D Facilities Department) works on the R/D Electronics/Electrical Department's PCAD system, designing low voltage power supply controller boards used for remote operation of proportional chambers in the new Muon Beamline tagging system. The PCAD is a computer system based on an IBM PC used for design of circuits. The Facilities Department is also using this system for design and layout of trigger divider modules, general purpose NIM to TTL and TTL to NIM converters, and "mother-boards" for pre-amplifiers for the Muon Beamline tagging system.

(Fermilab photograph 86-140-6)

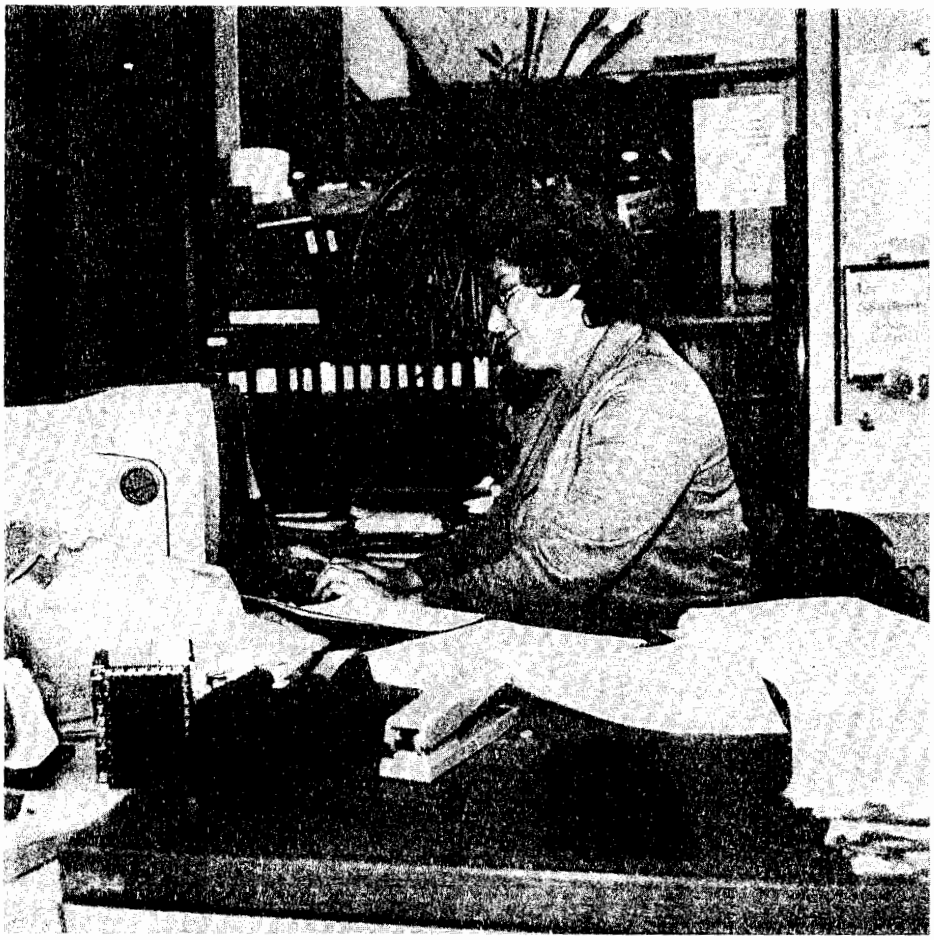

Shirley Jones (R/D Administrative Support Group) using the new MASS11 word processing system on the VAX. Word processing software packages change rapidly and user preference of various systems makes standardization a difficult task. The Research Division has been training Administrative Support personnel on the MASS11 system in an attempt to standardize word processing throughout the Division. This training will be completed this year. (Fermilab photograph 86-140-10)

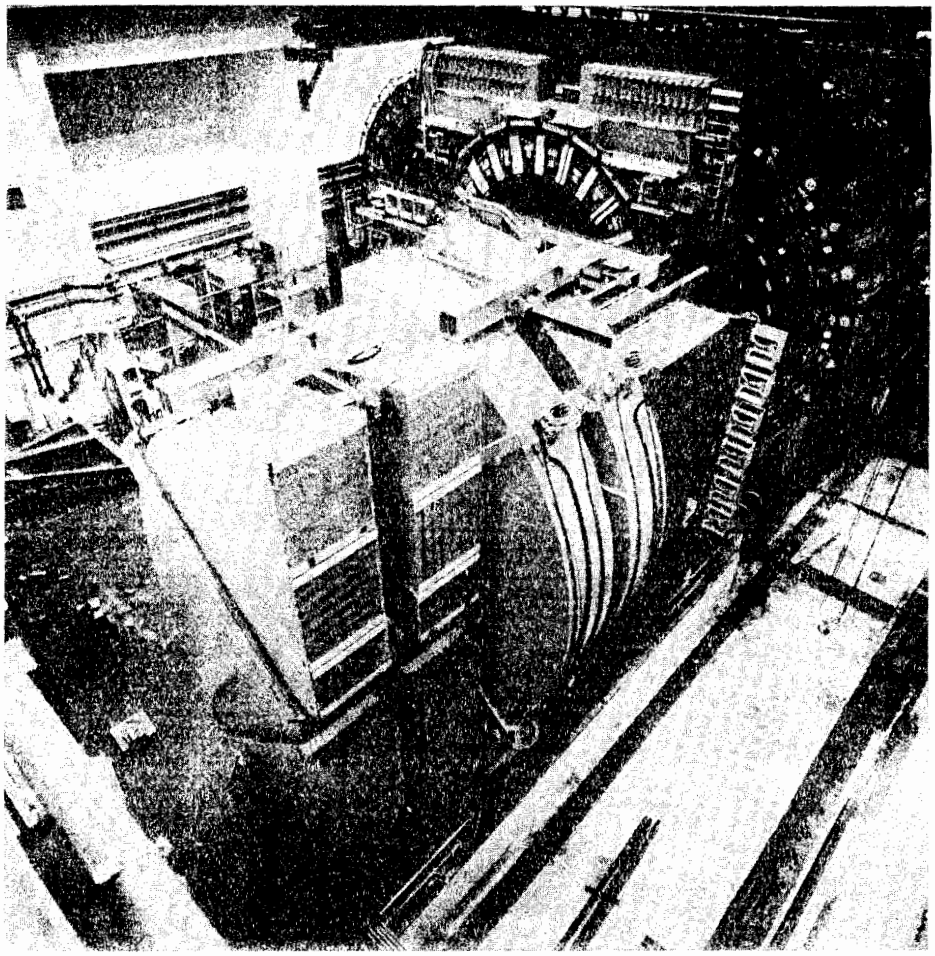

In the picture above, backward muon toroids, backward calorimeters and electromagnetic shower counters are ready to be moved into the CDF collision hall. These components should be in place in early March. The forward muon toroids, calorimeters, and electromagnetic shower counters will be installed in the collision hall in early June. After a brief period of Accelerator operation starting September 1, the Central Detector will be moved back into the collision hall in early November in preparation for the next CDF running period.

(Fermilab photograph 86-121-8)

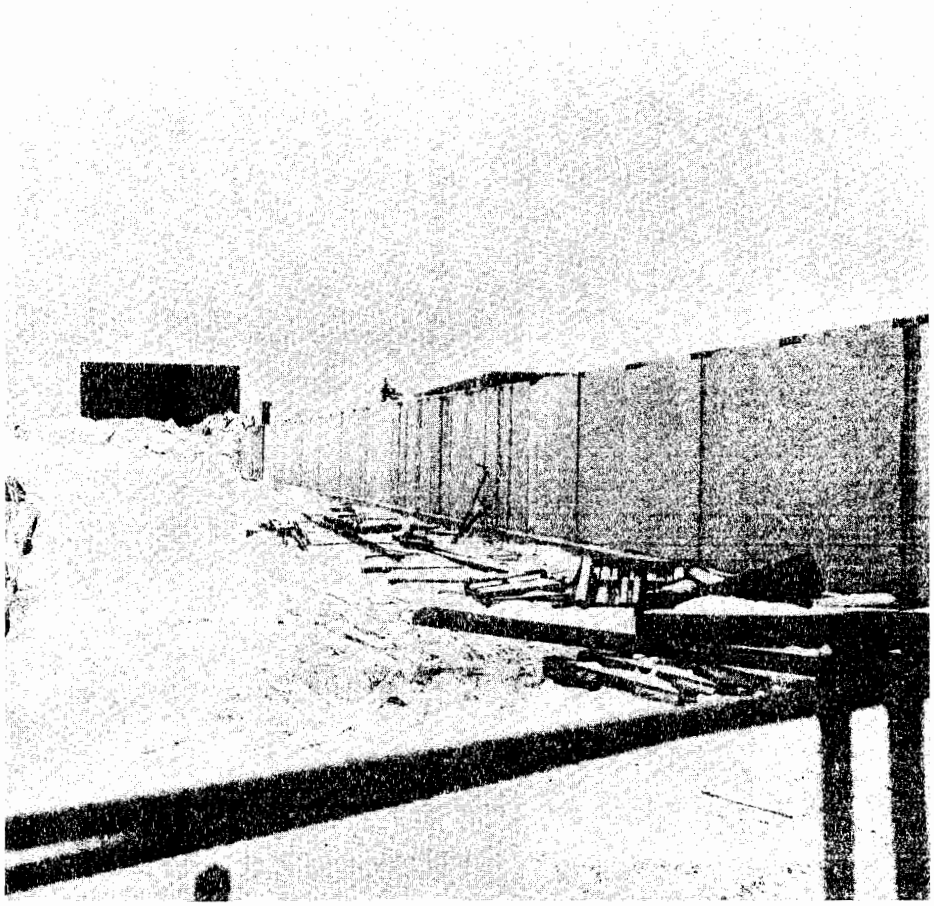

Construction of the new M-Polarized and M-West Experimental Halls and the secondary beamline enclosures leading to those halls are part of the final phase of the Tevatron II Project. Pictured above is the M-West secondary beamline enclosure which leads to the M-West Experimental Hall. The M-Polarized Experimental Hall is seen in the center of the picture, rising above the concrete casts of M-West. The Research Division will get beneficial occupancy of M-West by early March. In M-Polarized, beamline components are currently being installed upstream of the Detector Building, with downstream component installation beginning in late March. (Fermilab photograph 86-96-4)

August J. Mier
1892-1986

August J. Mier was as much a part of the rich tradition of Illinois' Fox River Valley as were the arrowheads and Indian artifacts he collected over much of a 93-year lifetime. Mr. Mier passed away on February 25th of this year, but the more than 500 arrowheads he collected on the Fermilab site and donated to the Lab in 1977 are on permanent display on the 15th floor of Wilson Hall.

An article published in the Aurora, Illinois, *Beacon-News* noted that "One of Augie's proudest moments was being honored by [Fermilab's then-Director] Robert R. Wilson for donating his huge collection of arrowheads...found on what became [the] Fermilab site. He took great pride in being a personal friend of Dr. Wilson's."

Margaret Pearson, Manager of Fermilab's Public Information Office, told the *Beacon-News* that Mr. Mier showed his collection of Indian artifacts to Lab officials when Fermilab first opened in 1970. "The artifacts, all found on Lab property, represented 60 years of collecting. He had every one marked as to the date and location found. The collection is invaluable to us. We were newcomers here, but this gave us some roots to the area . It helped put our genealogy in place. We continued a warm, friendly relationship with Mr. Mier since then, and we will miss him."

NOTES AND ANNOUNCEMENTS

Continuation of the Director's Special Colloquia on Topics in High-Energy Physics...

A series of colloquia designed for the non-specialist physicist will address areas of unusual interest in theoretical and experimental high-energy physics.

The following colloquia are to be presented in the Ramsey Auditorium in Fermilab's Wilson Hall.

"Linear Colliders," by Burton Richter (Stanford Linear Accelerator), on April 3, 1986, at 4:00 p.m.

(Title to be announced), by Israel Singer (Massachusetts Institute of Technology), on April 10, 1986, at 4:00 p.m.

"CP - Past, Present, and Future," by James Cronin (University of Chicago), on May 1, 1986, at 4:00 p.m.

Workshop on Antimatter Physics at Low Energy...

A three-day workshop on antimatter physics at low energy will be held at Fermilab from April 10 through April 12, 1986. The goal of this workshop is to gauge the interest in physics that would be accessible by adding a variable-energy antiproton storage and cooling ring to the existing Accumulator at Fermilab. The range of possibilities include provision for an internal gas jet, extracted beams, trapping and cooling antiprotons, and a $\bar{p}p$ collider-mode spanning center-of-mass energies through bottomonium.

This workshop will bring together the interested physics community, accelerator physicists, Fermilab staff and management, and representatives of the funding agencies for discussion of these physics possibilities. The anticipated result of the workshop is a clear view of the physics arguments for proceeding with a formal design study and, eventually, a proposal for an intermediate-energy antiproton ring at Fermilab.

For further information, please contact Phyllis Hale, Fermilab Users Office, P.O. Box 500, M.S. 103, Batavia, Illinois, 60510. Telephone: (312) 840-3111; FTS: 370-3111.

MANUSCRIPTS, NOTES, LECTURES, AND COLLOQUIA PREPARED
OR PRESENTED FROM FEBRUARY 24, 1986 TO MARCH 23, 1986

Copies of preprints with Fermilab publication numbers can be obtained from the Publications Office or Theoretical Physics Department, 3rd floor east, Wilson Hall. Copies of some articles listed are on the reference shelf in the Fermilab library.

Experimental Physics

R. G. Kennett et al. Experiment #516	A Comparison of Diffractive Λ and Ξ^- Photoproduction (Submitted to Nucl. Phys. B)

Theoretical Physics

J. Olienasis and C. H. Albright	Left-Right Symmetric Model with Ultralight Dirac Neutrinos (FERMILAB-Conf-85/85-T; presented at the 1985 International Symposium on Lepton and Photon Interactions at High Energies, Kyoto, Japan, Aug. 19-24, 1985.)
E. Eichten and J. Preskill	Chiral Gauge Theories on the Lattice (FERMILAB-Pub-85/146-T; submitted to Phys. Rev.)
E. Eichten et al.	Chiral Gauge Theories in the 1/N Expansion (FERMILAB-Pub-85/147-T; submitted to Phys. Rev.)
P. B. Mackenzie and H. B. Thacker	Evidence Against a Stable Dibaryon from Lattice QCD (FERMILAB-Pub-85/180-T; submitted to Phys. Rev. D)
R. K. Ellis et al.	Development of QCD Jets Emitted by Color-Singlet Sources (FERMILAB-Pub-85/181-T; submitted to Phys. Rev. D)
S. R. Das and M. A. Rubin	Worldsheet Reparametrizations and the Tomonaga-Schwinger-Dirac Formalism for String Theory (FERMILAB-Pub-85/182-T; submitted to Phys. Rev. D)

Astrophysics

D. Lindley et al.	Resource Letter: Cosmology and Particle Physics (FERMILAB-Pub-86/27-A; submitted to Am. J. Phys.)
D. Lindley	Hadronic Decays of Cosmological Gravitinos (FERMILAB-Pub-86/29-A; submitted to Phys. Lett. B)

General

M. Atac	Wire Chamber Aging (To be published in the proceedings of the Workshop on Radiation Damage to Wire Chambers, Lawrence Berkeley Laboratory, Berkeley, California, January 16 and 17, 1986.)
M. Atac et al.	Measurements of Drift Velocities and Lorentz Angles at 15 kG (Submitted to Nucl. Instrum. Methods A)
N. Giokaris et al.	Signal from the Natural Radioactivity of Depleted Uranium in Liquid Argon (FERMILAB-Pub-86/26; submitted to Nucl. Instrum. Methods A)
E. A. Treadwell	QUENCHD: An Analysis Code for Quench Events in Tevatron Magnets (FERMILAB-Pub-86/28; submitted to Particle Accelerators)

Colloquia, Lectures, and Seminars

D. Green	"Physics at the Fermi National Accelerator Laboratory Collider" (Fermilab, February 24 and 26, 1986)
S. Ohnuma	"Activities at Texas Accelerator Center" (Fermilab, February 25, 1986)
D. Peterson	"Temperature Compensation of Transmission Lines in the Stochastic Cooling Systems" (Fermilab, February 27, 1986)
M. Johnson	"Data Acquisition System for DØ, (Fermilab, February 27, 1986)

D. Bogert	"Proposals for Local Area Networks to Support Collider Experiments, Distributed Consoles, and Networked Data Collection Systems" (Fermilab, March 6, 1986)
M. Johnson	"Specific Shared Utilization of a Local Area Network for Accelerator-Wide Measurement" (Fermilab, March 6, 1986)
R. Ducar	"Optical Fiber Transmission Systems" (Fermilab, March 6, 1986)
H. Johnstad	"Data Structure and Memory Management in FORTRAN" (Fermilab, March 6, 1986)
J. Peoples	"The Antiproton-Proton Collider" (Fermilab, March 6, 1986)
D. Trbojevic	"Gas Desorption from the Cold Walls of the SSC Beam Tube Induced by Synchrotron Radiation" (Fermilab, March 11, 1986)
A. Hosoya	"Ginzburg-Landau Type Effective Theory for the Chiral and Deconfinement Transition" (Fermilab, March 18, 1986)
R. Orr	"Accelerator Division Information Meeting" (Fermilab, March 18, 1986)
F. Cilyo	"Retrofit of the TWT Power Supplies" (Fermilab, March 20, 1986)

DATES TO REMEMBER

April 10-11, 1986	Physics Advisory Committee Meeting
April 10-12, 1986	Workshop on Antimatter Physics at Low Energy, Fermilab; for more information, contact Phyllis Hale, Fermilab Users Office, MS #103, Fermilab, P.O. Box 500, Batavia, Illinois 60510; (312) 840-3111 or FTS 370-3111.
April 24-27, 1986	Conference on the Teaching of Modern Physics, Fermilab; for more information, contact the American Association of Physics Teachers, 5110 Roanoke Place, Suite 101, College Park, Maryland 20740.
May 2 and 3, 1986	Annual Users Meeting Fermilab, Batavia, Illinois 60510.
May 29 and 30, 1986	Sixth Annual Meeting of the Fermilab Industrial Affiliates
June 16-21, 1986	Extended Summer Meeting of the Physics Advisory Committee
June 23 - July 11, 1986	Summer Study on the Physics of the Superconducting Super Collider, Snowmass, Colorado; for information contact JoAnne Day, Argonne National Laboratory, 9700 South Cass Avenue, Argonne, Illinois 60439.
July 16-23, 1986	XXIII International Conference on High Energy Physics, Berkeley, California; for more information, please contact Susan Ovuka, Conference Secretariat, Building 80D, Lawrence Berkeley Laboratory, University of California, Berkeley, California 94720; (415) 486-6169.