Fermilab Library
0 1160 0038202 2

TEVATRON

LOW-BETA

QUADRUPOLES

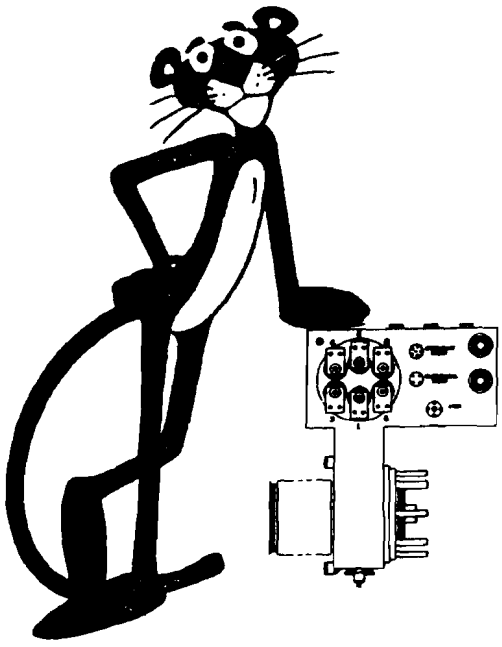

Requirements

and

Specifications

Current Issue - February 15, 1990

QC761.3
.T35
1990

ISSUE/REVISIONS

Low-Beta Quadrupole Requirements & Specifications

No.	Issue Date	Description/Notes
1	08/18/86	Initial Issue
2	11/25/86	First Lattice - New Coil Cross Section
3	01/13/87	New Design Data
4	01/27/87	Revised Performance and Geometrical Requirements
5	03/18/87	Revised Gradient Requirement - New Cross Section
6	06/10/87	Final Cross Section, Cryostat Concept, Etc.
7	12/14/87	Revised Collins Lattice Solution, No 1.8 K, New Correction Quads
8	07/25/88	General Update
9	1/23/89	General Update
10	2/15/90	General Update

AAv1336

Distribution:

L. Alsip
C. Ankenbrandt
D. Bogert
R. Brooker
B. Brown
J. Carson
H. Christ
D. Cobb
D. Darimont
H. Dick
G. Dugan
N. Engler
R. Ferry
D. Finley
H. E. Fisk
H. Fulton
T. Gardner
J. Garvey
N. Gelfand
S. Gourlay
R. Hanft
D. Harding
R. Hively
J. Huth
G. Jackson
R. Jensen
H. Jostlein
J. Kerby
G. Kobliska
K. Koepke
M. Kuchnir
S. Lackey
M. Lamm
E. Larson
R. Leverence
J. Lockwood
E. Malamud
P. Mantsch
P. Mazur
A. McInturff
A. Mokhtarani
T. Nicol
A. Oleck
J. R. Orr
G. Ott
J. Peoples
T. Peterson
H. Pfeffer
S. Reeves
D. Richardson
A. Riddiford
J. Ryk
J. Satti
T. Savord
D. Smith
J. Strait
J. Theilacker
D. Theriot
F. Turkot
R. Webber
D. Wolff
R. Yamada

Contents

	Responsible*
Introduction	Malamud
1.0 Requirements	
1.1 General Requirements	Malamud/Mantsch
1.2 Field Quality Requirements	Ankenbrandt/Gelfand
1.3 Electrical Requirements	
1.3.1 Quad Power System	Koepke
1.3.1.1 Controls	Bogert
1.3.1.2 Control & Status Interface	Lockwood
1.3.1.3 High-Current Circuits (7.5 kA)	Koepke/ Lockwood
1.3.1.4 Medium-Current Circuits (1 kA)	Koepke/ Lockwood
1.3.1.5 Low-Current Circuits	Koepke/Lockwood
1.3.1.6 Reversing Switches (QB_4,QB_5,TBA)	Brooker
1.3.1.7 Shunt Regulator (TB6)	Pfeffer
1.3.1.8 Buswork	Satti
1.3.1.9 LCW	Satti
1.3.1.10 AC Power Distribution	Ryk

*Person responsible for keeping the requirement or specification accurate, complete and current.

1.3.2 Quench Protection System — Koepke/Lackey

1.3.2.1 Quench Protection Monitor

1.3.2.1.1 Software

1.3.2.1.2 Hardware

1.3.2.2 Voltage/Frequency Converter

1.3.2.3 I Clock Generator

1.3.2.4 QPM-Fast Bypass Interface

1.3.2.5 Heater Firing Unit

1.3.2.6 Standby Power

1.4 Magnet Dimensional Requirements — (Niemann)

1.5 Tunnel Layout Requirements — Koepke

1.5.1 Mechanical/Electrical — Koepke

1.5.2 Cryogenic Layout — Theilacker

1.6 Alignment Precision Requirements — Koepke

1.7 Changeover Scenarios — Koepke

1.8 Correction Dipole Requirements — Brown

1.9 Beam Detector Requirements — Malamud/Koepke/Webber

1.10 Fixed Target Requirements — Koepke

2.0 Specifications

2.1 Quadrupole

2.1.1 Conductor — Gourlay/(McInturff)

2.1.2 Coil — (McInturff)/Riddiford

2.1.3 Coil Support Collar	Nicol/Carson
2.1.4 Yoke	Carson
2.1.5 Cold Mass Containment	Carson
2.1.6 Beam Tube	(Niemann)/Jostlein/Howell
2.1.7 Cold Mass Support	(Niemann)
2.1.8 Cryostat	(Niemann)
2.1.9 Alignment	
2.1.9.1 Q_0 Region	Sauer/(Niemann)
2.1.9.2 Q_1 Region	Sauer/(Niemann)
2.1.9.3 $Q_{2,3,4}$ Region	Sauer/(Niemann)
2.2 Quadrupole Correctors	
2.2.1 Conductor	Mantsch
2.2.2 Coil	Riddiford/Carson/Mantsch
2.2.3 Coil Support Collar	Nicol
2.2.4 Yoke/Support Skin	Carson
2.3 Refrigerator Specification	Peterson
3.0 Schedules	
3.1 Installation	
3.1.1 Mechanical	Sauer
3.1.2 Cryogenic	Theilacker
3.1.3 Electrical	Lockwood
3.2 Commissioning	

4.0 Measurement Results

4.1 Single-shell Quad Corrector

4.1.1 Conductor — Gourlay

4.1.2 Quench Behavior — Lamm/Gourlay

4.2 Two-shell Quad

4.2.1 Conductor — Gourlay

INTRODUCTION

The Tevatron Low-Beta Insertion

One measure of the efficiency of exploiting the Tevatron Collider for physics is the number of collisions that occur during a given running period. This number is proportional to the integrated luminosity at each major detector. As the luminosity is raised, the likelihood of detecting collisions of a quark and antiquark which contain large total energy is increased, creating opportunities for new physics discoveries.

The luminosity for head-on collisions is given by:

$$L = N_p \, N_{\bar{p}} \, B \, f_o / \, 4\pi\sigma^2,$$

where N_p and $N_{\bar{p}}$ are the per-bunch intensities, B is the number of bunches in each beam, f_o is the revolution frequency (47 kHz) and σ is the rms beam size of either beam. Round beams are assumed and this formula is uncorrected for the variation of beam size through the interaction region. Thus the luminosity is approximately inversely proportional to the area of the proton and antiproton beams at the collision point. For a given emittance beam, the transverse beam size can be obtained from the function, β. If β at the intersection point, called β^*, is reduced a factor of two in each plane, the beam size is reduced both horizontally and vertically by $\sqrt{2}$ and a factor of two increase in luminosity is obtained.

The currently installed and successful low-β insertion at BØ operates at a nominal β^* of 1 m. In fact, during the 1987 run β^* has been made as low as 70 cm by operating the existing insertion in a "mini-β" mode. There is no low-β insertion at DØ, and one must be constructed for the experimental program in the large detector being built there. At DØ the goal will be to build and install an insertion in time for the first run of the DØ detector that can reach values of $\beta^* < 50$ cm.

β^* can be made smaller by using stronger low-β quadrupoles or moving them closer to the interaction point. However, the latter approach is limited by the goal of making the detector as hermetic as possible and covering the small angle region where momenta are higher and require more room for particle measurements. As β^* is reduced, the maximum value of the amplitude function, β_{max} increases. It is important that β_{max} not become too large and make a beam admittance restriction that would reduce the lifetime.

A design for the DØ insertion has been made by T. Collins. This insertion is matched in betatron and momentum space. The matched insertion design can be replicated at other straight sections. The present plan is to do this at BØ, replacing the existing insertion, and thus increase the number of collisions per year that the powerful CDF detector can study.

The insertions being built for DØ and BØ use five pairs of high-current quadrupoles and four high-gradient correctors on either side of the intersection point. The longest quadrupole has a 232 inch magnetic length. The three pairs of quadrupoles bracketing the detector form asymmetric triplet lenses. The elements in the triplet operate at maximum gradients of 1.4 T/cm. This

is possible because of significant advances in the current carrying capability of NbTi superconducting cable over the past few years.

There are two types of high-gradient correctors: in one case a short two-shell cold-iron quadrupole is coupled to a spool correction package. In the other type a 7.5" O.D., one-shell quadrupole constructed with "5 in 1" conductor replaces half of the standard spool package.

The present low-β warm-iron quadrupoles at BØ perform at 1.12 Tesla/cm. A final design has been made for a cold-iron, two-shell quadrupole that at 4.9° provides the required gradient of 1.4 T/cm at a current of 5000 amps.

The inside coil diameter is 3" and there is a clear beam aperture of 2.7", equal to the horizontal and vertical Tevatron dipole aperture. The outside of the cold iron is 10.5" in diameter. Design and construction of 1 meter long prototype coils, coil curing fixtures, coil collars, and collar assembly tools is nearing completion. The schedule calls for the first prototype to be ready for tests in a vertical dewar in January and the first complete quadrupole to be ready in April, 1988.

The superconducting cable is woven from .021" strand containing 630 filaments, 13 microns in diameter and a copper to superconducting ratio of 1.5:1. It is expected that the NbTi can reach a current density of 3000 A/mm^2 at 4.2° K and 5 T. There are 47 turns per pole in the final two-shell design and 65 turns per pole in the one-shell correctors. The two-shell transfer function is 0.291 T/cm/kA; for the one-shell it is 0.562 T/cm/kA.

The DØ low-β insertion also requires considerable electrical, cryogenic, and mechanical design and engineering effort. Although the insertion at DØ will be built before the retrofit at BØ, an attempt is being made to keep them identical to reduce spares requirements. The innermost quadrupole of the triplet is cantilevered into the collision hall and inserts into the end caps of the major detectors. The CDF detector presents the more restrictive 20" square, whereas the constraint at DØ is a 22" square. A cryostat design satisfying this constraint has been made. Heat loads have been calculated and a decision made to operate the DØ low-β quadrupoles on the existing refrigerators in the C4 and D1 service buildings.

The DØ low-β insertion is mechanically more complex than either the present one at BØ or the retrofit planned for BØ. Since the electrostatic septa for extracting the proton beam from the Tevatron are located at DØ, this straight section must be reconfigured each time the physics program is switched between fixed target and collider mode. Mechanical designs have been made for mounting sets of components on movable girders to make these changeovers efficient and reproducible.

In summary the lattice uses Collins insertions, identical at both BØ and DØ. The Tevatron is tuned to $(\nu_x, \nu_y) = (20.58, 20.59)$ and the beam is squeezed with $\beta_x = \beta_y$ starting from injection values of $\beta = 170$ cm down to $\beta < 50$ cm.

Electrostatic Separators

The oppositely charged beams must be kept apart except at the BØ and DØ experiments in order to minimize beam-beam effects. This is accomplished with local electrostatic "three bumps" in each plane. One pair of bumps creates helical orbits from B11 to C49. The other pair of bumps keeps the beams apart from D11 to A49.

One particular choice of separator strengths results in almost round helices when $\beta^* \sim 50$ cm. For a specific assumption of beam properties, the total beam-beam separation in "σ's" can be calculated. For equal normalized transverse emittances, $\epsilon H = \epsilon V = 24\pi$, p = 1000 GeV/c, and $\Delta p/p = 0.12 \times 10^{-3}$, in most places the beams are 12 or more σ's apart. If the number of bunches, B = 53, there are 106 crossing points, spaced 59.3 meters apart and one collision point at BØ and one at DØ. A list of required separators can be developed for this scheme. If 5×10^6 volts/meter can be achieved (e.g. 200 kV on a 4 cm gap), then a "natural" separator module length of about 3 meters is convenient. Eighteen such modules are required.

References

1. Rol Johnson: Transparencies, July, 1985 (spiral beams).
2. Tom Collins: "On the Design of Low-Betas for BØ Plus DØ," April, 1987.
3. Karl Koepke: "BØ/DØ Low-Beta Lattice," July 1, 1987.
4. Karl Koepke: " 'Existence Proof' for Mixed Mode Operation," July 14, 1987.
5. Karl Koepke: " 'Existence Proof' for Mixed Mode Operation," July 21, 1987.
6. Karl Koepke: "Lattice Summary," August 27, 1987.
7. E. Malamud: "Electrical and Cryogenic Requirements for the Collins Low-Beta Insertion," July 22, 1987. (Collins "variant 1" and "variant 2")
8. E. Malamud: "Results of Some SYNCH Runs on the Collins Low-Beta Insertion," August 17, 1987.
9. E. Malamud: "Revised Electrical and Cryogenic Requirements for the Collins Low-Beta Insertion," August 18, 1987. (Collins "variant 3")
10. E. Malamud: "An Electrostatic Separator Scheme for the Tevatron," September 1, 1987.
11. Karl Koepke: "BØ/DØ Low-Beta Lattice," September 24, 1987.
12. Karl Koepke: "Possible 1989 Mixed BØ/DØ Low-Beta," October 15, 1987.
13. Karl Koepke: "BØ/DØ Low-Beta Tunnel Layout," October 27, 1987.

1.0) Requirements

1.1) General Requirements

The figure shows the layout of components for the complete project. The lattice functions and required magnet strengths are shown in the table below. These functions Q_1-Q_5,T_6-T_9,must be provided in each of four (4) locations for the complete project. Since the lattice locations are not otherwise identical, different elements provide these functions as shown in the tables below.

The maximum gradients are the maximum for each element going from Step 1 (β^* about 175 cm) to Step 17 (β^* about 25 cm). For the SPOOL/QUADRUPOLE CORRECTORS the upstream and downstream elements run at different gradients. The maximum for each pair is shown in the table. For these elements the gradients have been scaled from Koepke's numbers which are based on magnetic lengths of 30".

Currents at the maximum gradient are calculated using transfer functions:

"717" cross section	0.2913 T/cm/kA
"S5" cross section	0.5825 T/cm/kA

QUADRUPOLES

	Cross Section (note 1)	Magnetic Length (inches)	Complete Project Max Gradient (kg/m)	(note 2) Current (A)
Q_1	717	55.19	585.8	2011
Q_2	717	132.0	1401.3	4811
Q_3	717	232.0	1382.4	4746
Q_4	717	132.0	1401.3	4811
Q_5	717	55.19	821.7	2821

SPOOL/QUADRUPOLE CORRECTORS

T_6	717	23.875	1407.0	4832
T_7	S5	25.	632.8	1086
T_8	S5	25.	144.1	247
T_9	S5	25.	563.4	967

Notes:

1. "717" is the two-shell, high-current quadrupole and "S5" is the one-shell quadrupole using segmented 5-in-1 conductor.
2. K. Koepke. "BØ/DØ Low-Beta Lattice, Revision 1." September 24, 1987.

The lattice functions specified in the previous table are carried out with the following objects. In addition, correction coils are required at various locations. (See also Section 1.8.) The numbers required are specified.

Device	Upstream Cross Section (L eff)	Downstream Cross Section	Lattice Function	Power Lead	Number Req	Spare	Tot
N54xxF	717(54")	None	Q1,Q5	NO	8	2	10
N13xxF	717(132")	None	Q2	NO	4	1	5
B13xxF	717(132")	None	Q2,Q4	NO	4	1	5
N23xxF	717(232")	None	Q3	NO	4	1	5
TSJxxx	717(24")	DSQI	T6	5000,50	2	1	3
TSKxxx	717(24")	DSQII	T6	5000,50	2	1	3
TSLxxx	DD(30")	None	Q5 Spool	5000,50	4	1	5
TSMxxx	S5	DSQ I	T7,T8,T9	2000,50	6	2	8
TSNxxx	S5	DSQ II	T7,T8,T9	2000,50	6	2	8
TSPxxx	DDQ	None	Q1 Spool	5000,50	4	1	5

The TSL,TSP and B13xxF will also include beam position detector packages for both horizontal and vertical sensing (see Sec. 1.9).

Name Conventions

Names are defined by the following conventions. Names for all Tevatron magnets have used a maximum of six letters.

Quadrupole Names: (See Note 1)

The quadrupole names consist of six characters:

BKKNNP where
B gives the beam detector orientation
- V = measures vertical beam position
- H = measures horizontal beam position
- N = no beam position detector
- B = both horizontal and vertical detectors

KK specifies the type of special quadrupole

Previous List
- 14 = 144" magnetic length "BØ Low-beta"
- 18 = 180" magnetic length "BØ Low-beta"
- 25 = 25" magnetic length Tevatron Type
- 32 = 32" magnetic length Tevatron Type
- 66 = 66" magnetic length "BØ Low-beta"
- 82 = 82" magnetic length Tevatron Type
- 90 = 90" magnetic length Tevatron Type
- 99 = 99" magnetic length Tevatron Type

New Additions
- 54 = 54" magnetic length "Cold-iron Low-beta"
- 13 = 132" magnetic length "Cold-iron Low-beta"
- 23 = 232" magnetic length "Cold-iron Low-beta"

NN specifies the production serial number. It is odd if the coil is bused as an F quadrupole; it is even if it is bused as a D quadrupole. It is NEVER zero. The magnets for the cold-iron low-beta project will all be bused as F magnets and given odd serial numbers (see Note 2).

P is a (redundant) indicator of the horizontal focussing or defocusing nature of the quadrupole: it is either F or D.

Spool Names: (See also Note 3.)

Tevatron Spools contain typically two sets of concentric correction packages, one upstream and one downstream. These are packaged in a single cryostat which is tested as a single object. Names of Tevatron Spools are specified as TSxNNN where NNN is a serial number and x specifies the combination of correctors. The full complement of correction devices in the original Tevatron is specified in drawing 1620-MD-124910. Device labels for x= A,B,C,D,E,F,G,H are given where all except H type spools are fully specified by the type. H spools are special and several different types exist which share the characteristic that they contain main dipole power leads (Power Spools) and usually a DDQ Correction Package. Spool types A-G contain DSQ spool packages in the upstream location and OSQ spool packages in the downstream location. Spool type I was used for the BØ low-beta project and contains a 30" long DD corrector plus different lengths of bypass (which creates a section of warm beam pipe).

New types J and K will contain 24" two shell quadrupole packages in the upstream location and DSQ packages in the downstream location. New type L spools will contain DD (30") correction packages. New type M and N spools will contain 21.5" single shell (5-in-1) quadrupoles with DSQ packages downstream. New type P spools will contain DDQ correction packages.

Notes:

1. The quadrupole naming scheme follows that from a memo by Jay Schmidt (February 12, 1982). I have quoted from a MTF Operations Bulletin #83-05 by Ray Hanft of July 28, 1983. Another source of information is UPC No 163, September 1, 1982 by Sho Ohnuma.

2. The 66" low-beta quads for BØ also include a 40" DD correction dipole package which is not indicated by the name.

3. The spool naming scheme for correction coils and packages was specified for the original Tevatron in drawing 1620-MD-124910.

B0 STRAIGHT SECTION

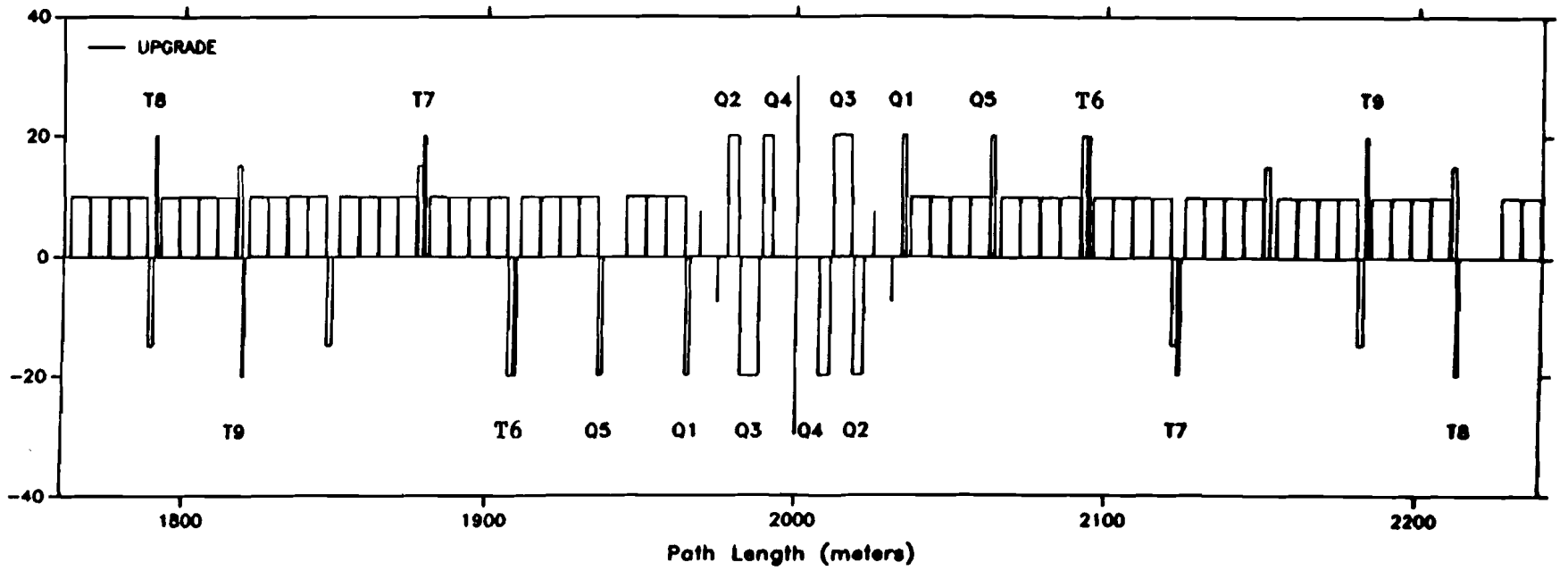

D0 STRAIGHT SECTION

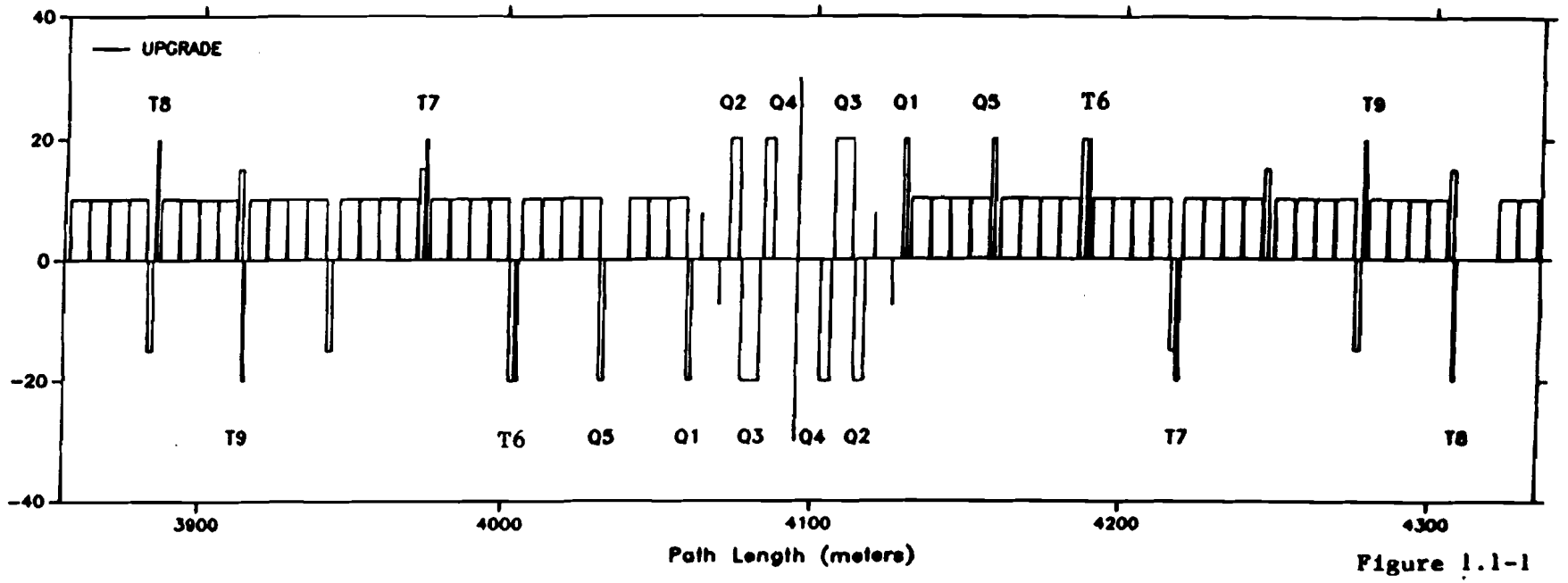

Figure 1.1-1

1.2) Field Quality Requirements

Field quality requirements are determined using the existing Low Beta magnets at B0 as a reference. Magnetic measurements have been performed in the Lab 2 dewar on 3 production magnets. The harmonic coefficients for these magnets are shown in Figures 1.2-1 and 1.2-2 with the data for the existing Low Beta system. Units are 10^{-4} of quadrupole field at 1 inch. a_n and b_n are the skew and normal coefficients of the 2 (n + 1) pole.

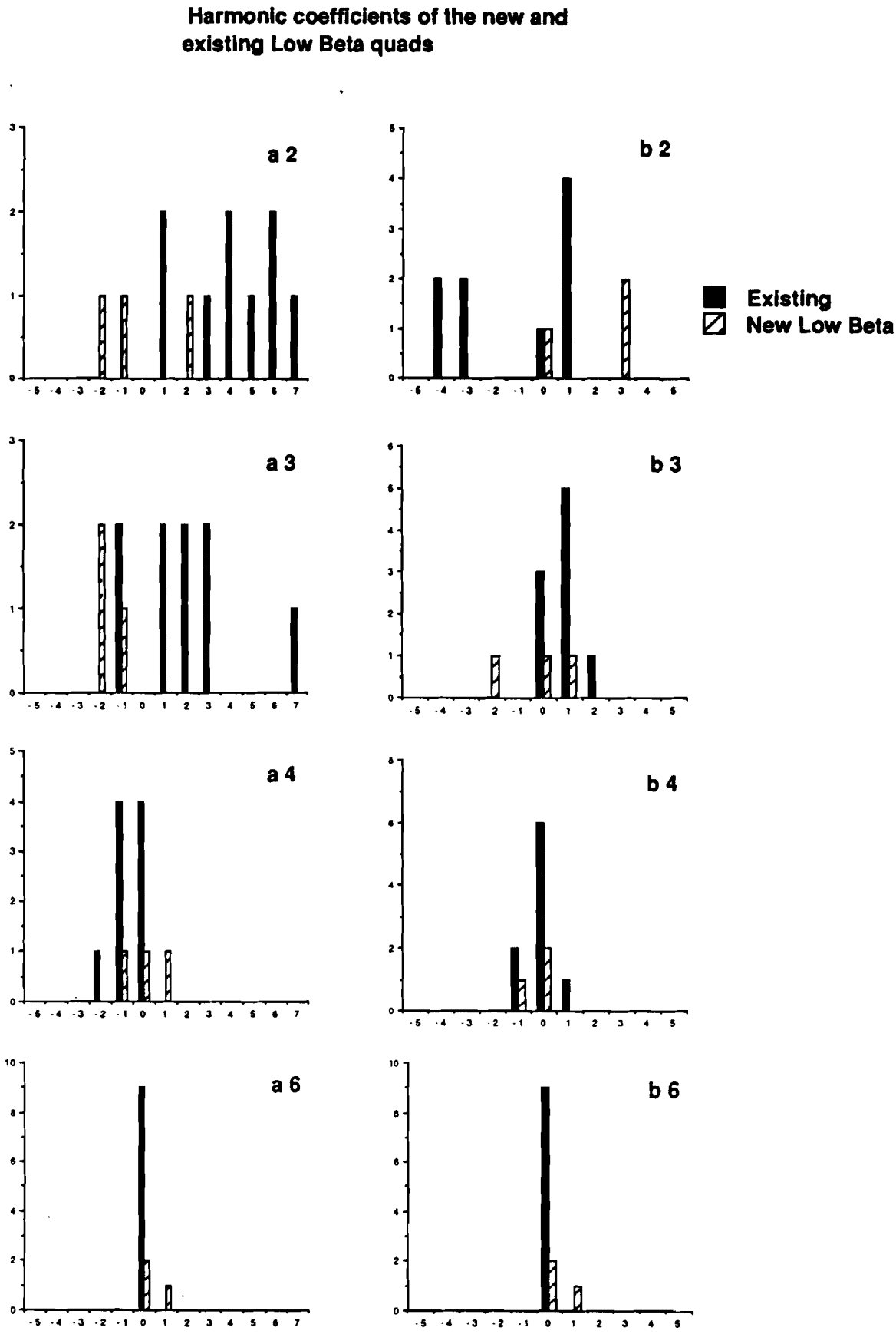
Harmonic coefficients of the new and existing Low Beta quads
a 2
b 2
a 3
b 3
a 4
b 4
a 6
b 6
Existing
New Low Beta

Figure 1.2-1

12-Pole normalized harmonic coefficient b5 for the existing Low Beta quads and results for 3 of the new Low Beta quads

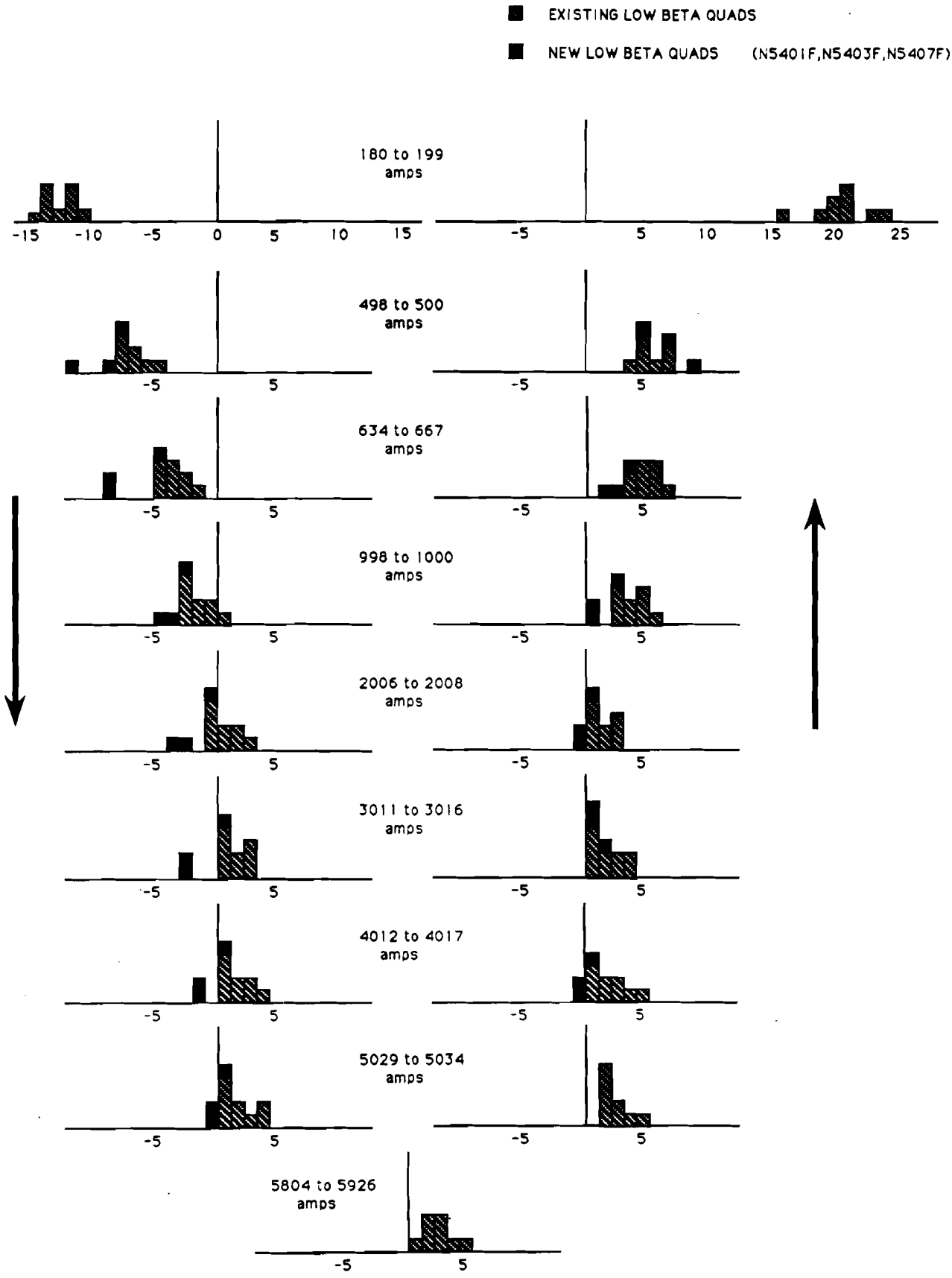

Figure 1.2-2

1.3) Electrical Requirements

Each low-beta insert will require five high-current quadrupole circuits, six medium-current quadrupole circuits and eight 50 A correction dipole circuits. The insertions at BØ and at DØ are optically identical. However, minor mechanical and electrical differences do exist because of the requirement that the accelerator be readily reconfigured for fixed-target operation.

1.3.1.3 High-Current Circuits (7.5 kA)

The high-current low-beta quadrupoles and a simplified high-current circuit are shown in figure 1.3.1.3-1. The high-current quadrupoles are symmetrically (T_6 is in a low-beta spool and is slightly asymmetric) located relative to the collision point in the straight section and are powered as focusing-defocusing pairs. The currents in the Q_2 and Q_4 magnets are equal throughout the low beta squeeze. These magnets are combined in a single series circuit to eliminate one power circuit. Water cooled 2"x 2" copper bus spans the straight section and connects the magnets and the power supplies.

All the high-current power supplies are centrally located in the 0-service buildings. At their nominal maximum gradient of 1400 kG/m, the quadrupoles operate at a 4807 A current. The power supplies have a capacity of 7500 A which is a comfortable safety margin even if the magnets are upgraded to 2000 KG/m.

Quenches are detected by comparing in a microprocessor the inductive coil segment voltages measured at the circuit voltage taps. Immediately after a quench is detected, the power supply is turned off (bypass), and all the quench heaters in the circuits' magnets are energized. The heaters increase the resistance of the circuit, thereby decreasing the L/R time constant of the current decay. Should the magnets prove capable of self-protection, the heaters will still be necessary to protect the cold-power-lead-to-coil connections unless a means is found to totally stabilize them.

The power circuit does not utilize an external dump. This means that during a quench, most of the magnetic energy is dumped into the refrigeration systems on both sides of the straight section. It may be possible to decouple the quenching magnet with a thryristor shunt. However, this places a greater burden on the quench detection system which now must monitor the remaining circuit magnet(s) for a quench while the circuit current is decaying.

Fabrication or alignment errors, asymmetric lattice locations or machine physics experiments may require that the paired quadrupoles of a circuit operate at nonequal currents. The required current difference is expected to be small except for the T_6 circuit which operates at an approximately 10% current imbalance due to its nonsymmetric lattice geometry. The current difference will be obtained with a variable shunt.

1.3.1.4 Medium-Current Circuits (1 kA)

The T_7, T_8 and T_9 quadrupoles are located in low-beta spool pieces at the A43, A44, A46, B14, B16 and B17 locations of the BØ low-beta insert and at the C43, C44, C46, D14, D16 and D17 locations of the DØ low-beta insert. Each magnet will be powered by its own 1.1 kA power supply. The supplies will be located in the nearest service building. Doubled 500 MCM cable with high temperature insulation will connect the magnets to the power supply. The cables can be mounted on the ceiling of the service building stairwells.

A completely passive quench protection system without heaters or microprocessor will be used.

1.3.1.5 Low-Current Circuits

The correction elements associated with the low β insertions are listed in section 1.8.

The DSQI (DSQII) elements which are located in the downstream locations of the low β trim quadrupoles (T_6, T_7, T_8 and T_9) and the DSQ elements of the 43S spools at the A48,C48 locations of the Tevatron are identical to the DSQ elements of the original spool pieces at these locations. The dipole and sextupole coils of these elements will use the existing power supplies and tunnel cables. The existing tune quadrupole cables at these locations will be spliced without connection to the quadrupole coils as the new low β lattice was calculated with these quadrupoles unenergized.

The upstream and downstream skew quadrupoles of the DDQ elements are powered in series. These circuits also use existing power supplies and tunnel cables. The BØ straight section skew quadrupoles are powered by a single 50 A regulator module of the dipole correction power supply rack located in the B1 service building. The DØ straight section skew quadrupoles are powered by one module of the correction dipole power supply rack in the D1 service building.

The correction dipole coils of the DD and DDQ elements are separately powered. The tunnel cables and correction power supply rack (BØ service building) for the BØ straight section correction dipoles are already installed. The DØ tunnel cables and the DØ service building power supply rack need to be installed. A correction power supply rack contains 16 slots for 50 A power supply regulators. If the correction dipoles of the DD and DDQ elements are able to run without quenching at currents higher than 50 A, then the regulators will be paralleled into 8 regulators capable of 100 A.

Notes

1. It is assumed that the low-beta insert will be a modified Tom Collins low-beta circuit similar to the one described in "BØ/DØ Low-Beta Lattice," Revision 1, Karl Koepke, September 24, 1987.
2. A connection diagram and tables describing the high and medium-power circuits are attached.
3. Details of power system are shown in figure 1.3.1.3-2.

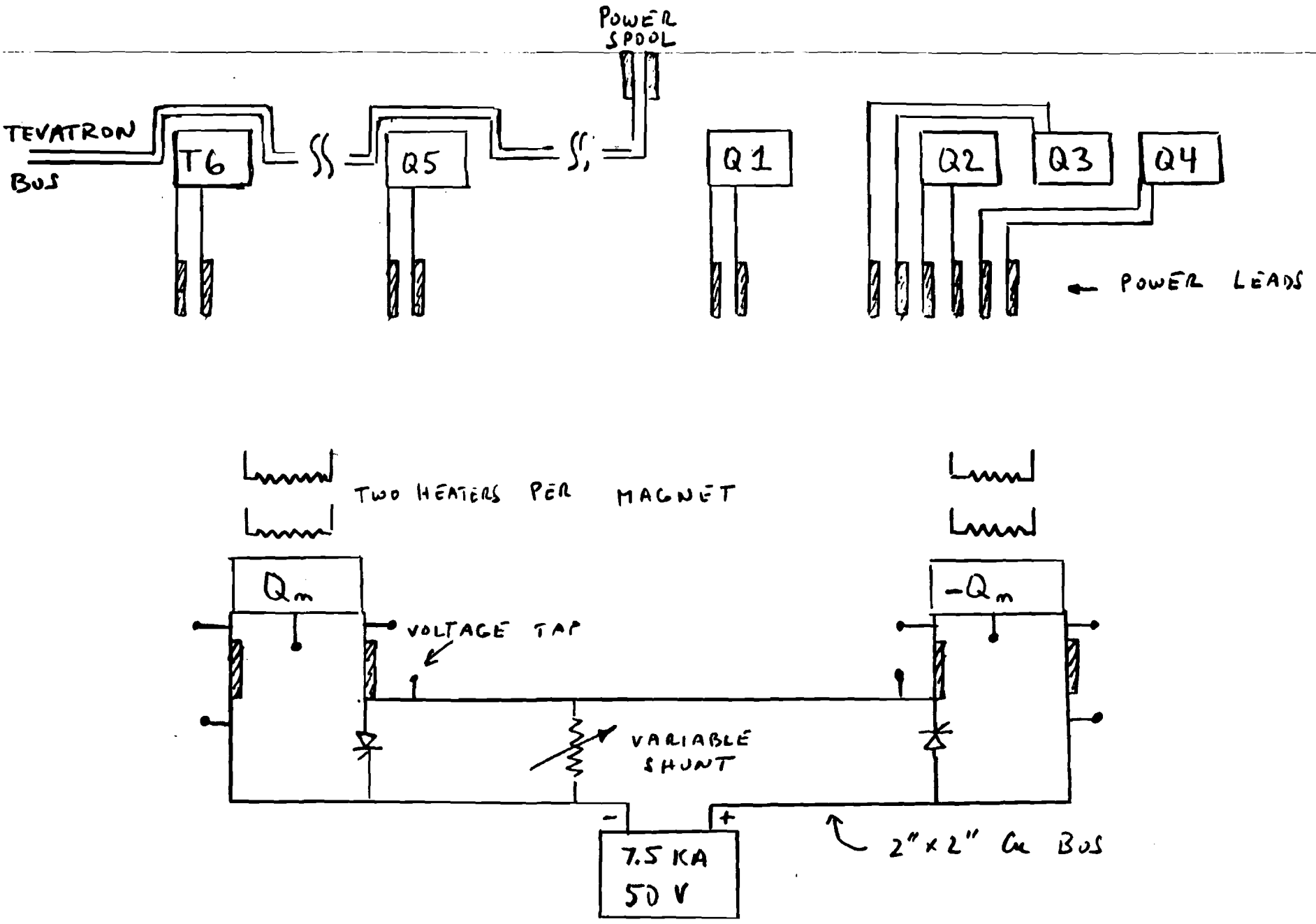

Figure 1.3.1.3-1

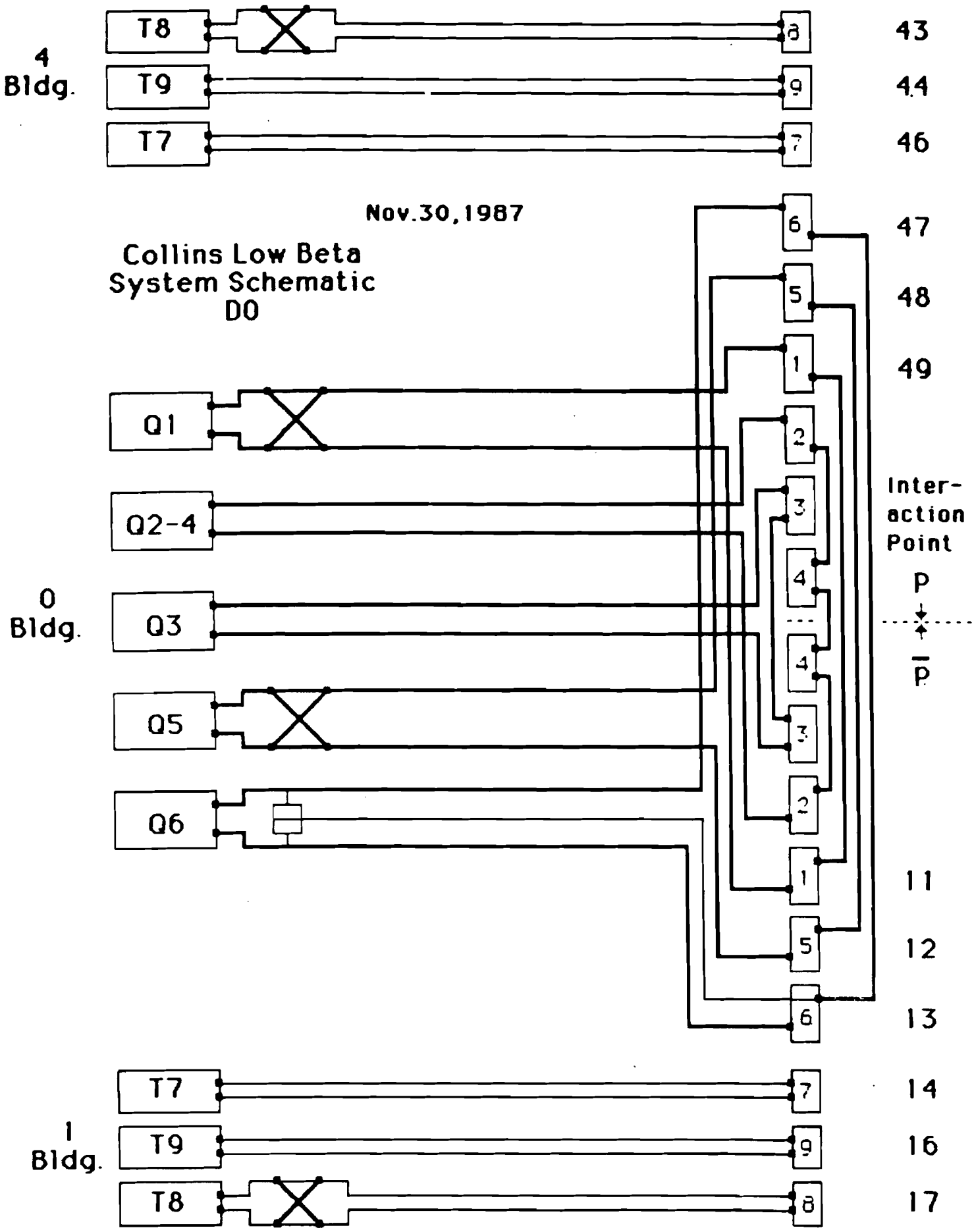

Figure 1.3.1.3-2

12/9/87

Q1	V	R μΩ	P kW (2,011A)	GPM	P kW (7,500A)	GPM
Bus		2,620	10.6	2.4	147.4	33.5
Diode	2.7	150	6.0	1.4	28.7	6.5
Filter		366	1.5	0.3	20.6	4.7
Rev.Sw.	3.0	254	7.1	1.6	36.8	8.4
Totals	5.7	3,390	25.2	5.8	233.5	53.1

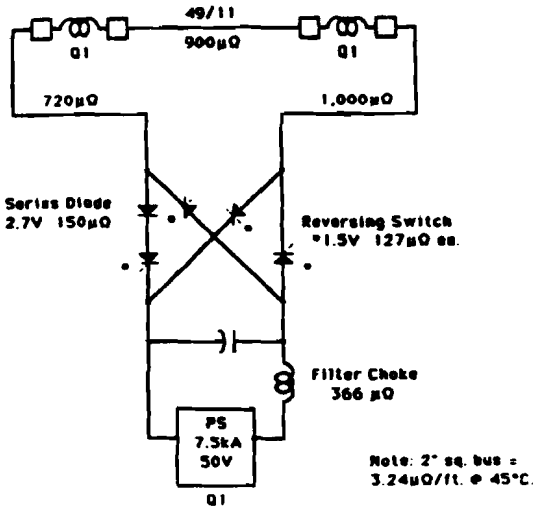

12/9/87

Q2-4	V	R μΩ	P kW (4,811A)	GPM	P kW (7,500A)	GPM
Bus		2,620	60.6	13.8	147.4	33.5
Diode						
Filter		366	8.5	1.9	20.6	4.7
Rev.Sw.						
Totals		2,986	69.1	15.7	168.0	38.2

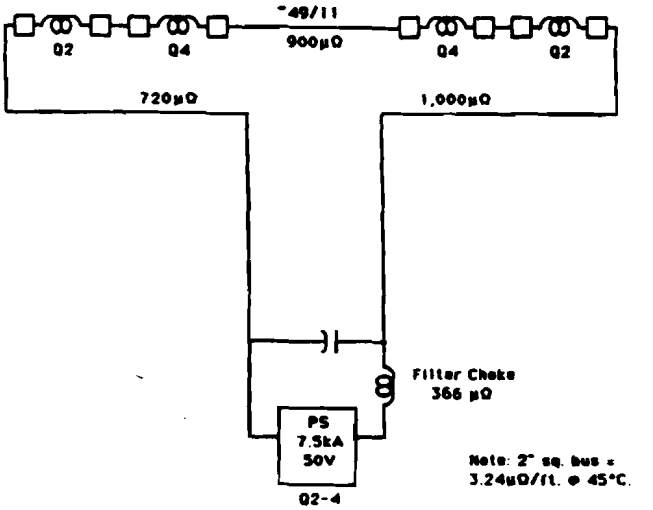

12/9/87

Q3	V	R μΩ	P kW (4,746A)	GPM	P kW (7,500A)	GPM
Bus		2,620	59.0	13.4	147.4	33.5
Diode						
Filter		366	8.5	1.9	20.6	4.7
Rev.Sw.						
Totals		2,986	67.5	15.3	168.0	38.2

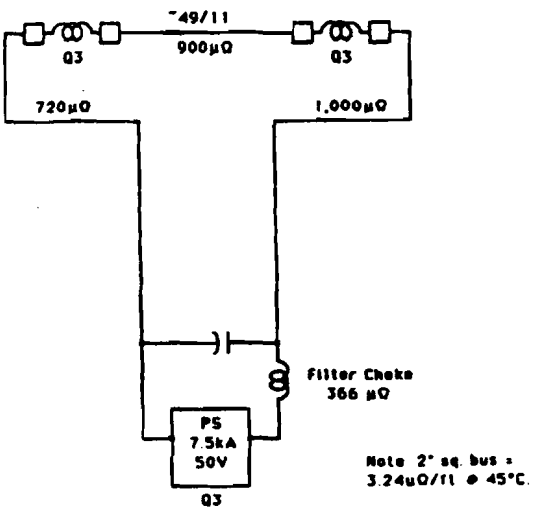

12/9/87

Q5	V	R μΩ	P kW (2,821A)	GPM	P kW (7,500A)	GPM
Bus		3,917	31.2	7.1	220.3	50.1
Diode	2.7	150	8.8	2.0	28.7	6.5
Filter		366	2.9	0.7	20.6	4.7
Rev.Sw.	3.0	254	10.5	2.4	36.8	8.4
Totals	5.7	4,687	53.4	12.2	306.4	69.7

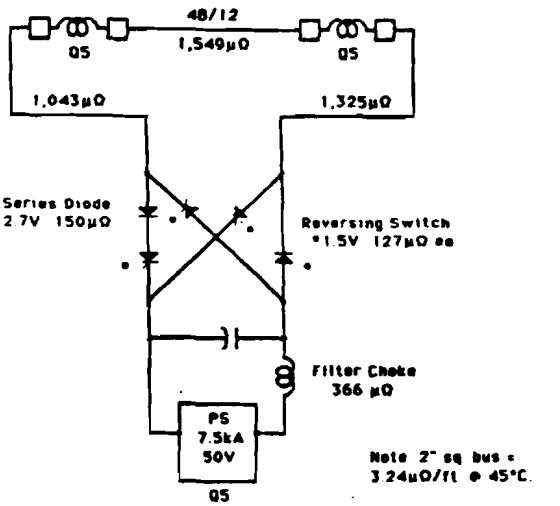

Power Supply and Cooling Water Design Worksheet Bus Work and Switches for Cold-Iron Low-Beta

Figure 1.3.1.3-3A

12/9/87

Q6	V	R μΩ	P kW (4,807A)	GPM	P kW (7,500A)	GPM
Bus		5,214	120.5	27.4	293.3	66.7
Diode						
Filter		366	8.5	1.9	20.6	4.7
Rev.Sw.						
Totals		5,580	129.0	29.3	313.9	71.4

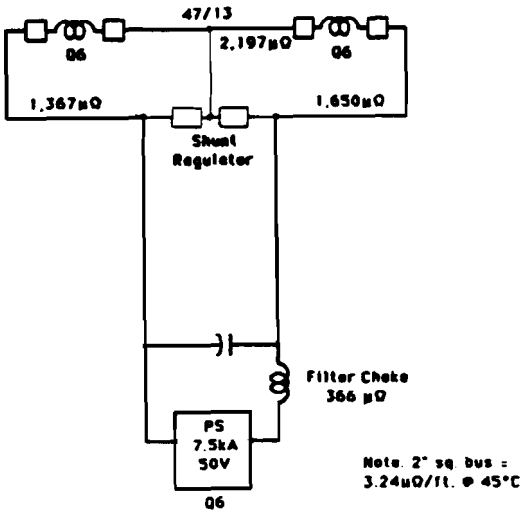

12/9/87

T7	V	R μΩ	P kW (769A)	GPM	P kW (1.0kA)	GPM
Cable		6,100	3.6		6.1	
Diode						
Rev.Sw.						
Totals		6,100	3.6		6.1	

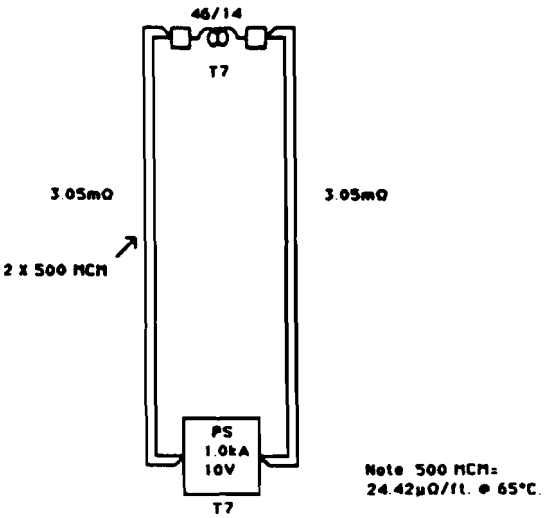

12/9/87

T8	V	R μΩ	P kW (175A)	GPM	P kW (1.0kA)	GPM
Cable		8,600	0.26		8.6	
Diode	2.7	150	0.48	0.1	2.85	0.6
Rev.Sw.	3.0	254	0.53	0.1	3.25	0.7
Totals	5.7		1.27	0.2	14.7	1.3

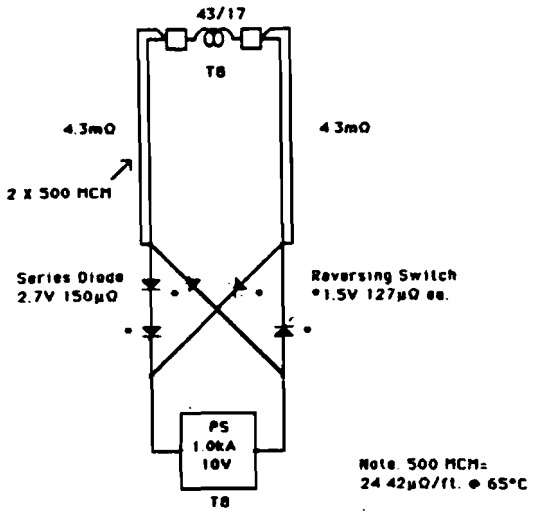

12/9/87

T9	V	R μΩ	P kW (685A)	GPM	P kW (1.0kA)	GPM
Cable		6,100	2.9		6.1	
Diode						
Rev.Sw.						
Totals		6,100	2.9		6.1	

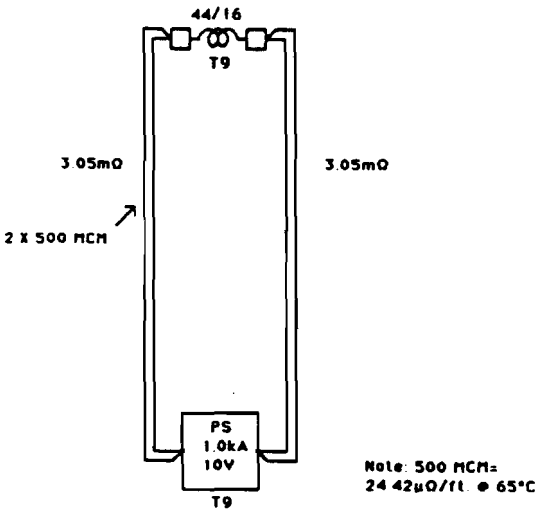

Figure 1.3.1.3-3B

1.3.2 Quench Protection System

The high-current quadrupoles will be protected actively with heaters and will use microprocessor-based quench protection monitors. The lower current trims will be protected by analog circuitry similar to the circuits used presently by the Tevatron correction elements. These circuits will be housed in the power supplies themselves.

1.3.2.1 Quench Protection Monitor

The quench protection system will be a completely new design. Rather than have a separate quench protection system for each circuit, the function of all the qpm's for all five circuits will be performed by one system at B0 and one at D0.

The software will be in a higher level language instead of assembly language. The link with the main control room will be made via the token ring instead of the camac serial link.

1.3.2.1.1 Software

The software for the quench protection monitor consists of several layers. There is the real-time quench protection application software which is interrupt driven at a 60 Hz rate and the heartbeat task which is interrupt driven at a 720 Hz rate.

These tasks run under the MTOS operating system at very high priority. The 60 Hz task does all the data collection and calculations necessary to determine if a quench has occurred. This task can only be interrupted by the 720 Hz task which sends a heartbeat signal to the power supply, hardwire loop and the heater firing units. A command to turn off (or fire in the case of the HFU'S) or the absence of a command will cause the power supply to turn off, heaters to fire and hardwire loop to go into bypass.

The communications software is composed of several parts. There is a Token Ring driver which packages information into the Token Ring format and unpackages information coming into the QPM from the main control room. The information is then in the ACNET format and is translated into OOC format.

OOC is an acronym for Object Oriented Communication. OOC is a collection of methods for extracting data from the QPM. The interface between OOC and the real-time software is another package of software which uses the correct OOC method to acquire the data structures which will be available to the main control room applications programs.

One big advantage to this approach is that the applications programs will use the database for all information instead of special commands.

REV.	DESCRIPTION	DRAWN & APPROVED
A	ADDED HEATER NOTES	S.W. 8/4/89 H.F.

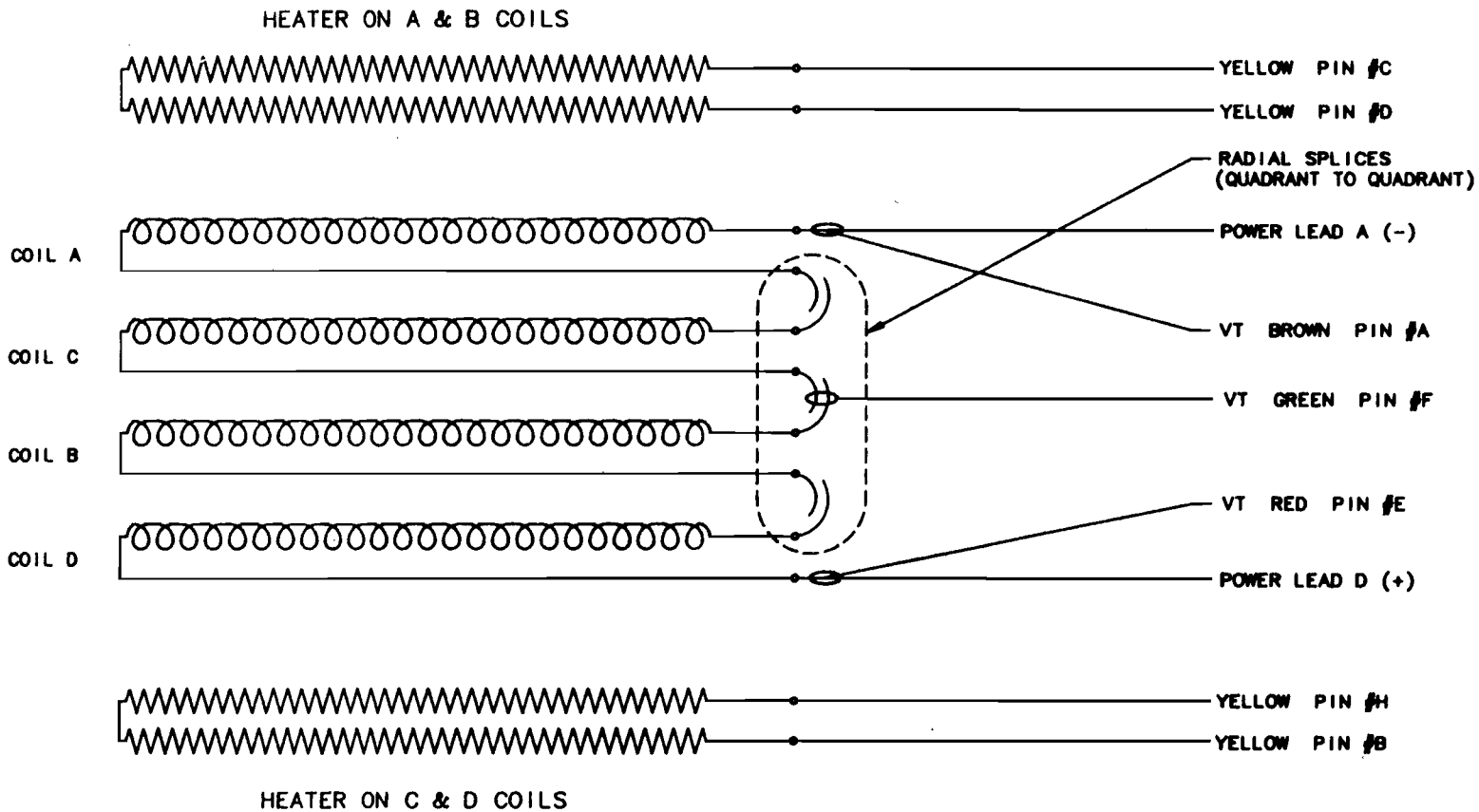

FNTS05::USR$ROOT5:[FULTON.LBQ2SHELL]217838.DWG

SDRC IDEAS GEODRAW LEVEL 4.1

TOLERANCES UNLESS OTHERWISE SPECIFIED	ORIGINATOR J. CARSON	FERMI NATIONAL ACCELERATOR LAB U.S. DEPARTMENT OF ENERGY
± 2 PLACES ± 3 PLACES ± ANGLES	DRAWN S. WALKER 7/14/89	TITLE LBQ716 COLDMASS Q1 & Q5 INSTRUMENT WIRE DIAGRAM
DIMENSIONS AND TOLERANCES PER ANSI Y14.5 STANDARDS. BREAK ALL SHARP EDGES .01in. SURFACE TEXTURE 125	CHECKED	
	APPROVED H.FULTON 15 JUL 89	
USED ON	MATERIAL	SCALE / DRAWING NUMBER 0102-MB-217838 / SHEET / REV. A

Figure 1.3.2-1

1.3.2.2 Voltage/Frequency Converters

The voltage to frequency converter chassis for the Low Beta Quench Protection Systems at B0 and D0 will look like this:

+/- 10 V. Chassis

```
                 spares                          I
/_____________________________\/_____________________\
|1 |2 |3 |4 |5 |6 |7 |8 |9 |10|11|12|13|14|15|
|  |  |  |  |  |  |  |  |  |  |  |  |  |  |  |
|--|--|--|--|--|--|--|--|--|--|--|--|--|--|--|
|16|17|18|19|20|21|22|23|24|25|26|27|28|29|30|
|__|__|__|__|__|__|__|__|__|__|__|__|__|__|__|
\              voltage to ground                /
```

200mV Power Leads Chassis #1

```
_____________________________________________
|1 |2 |3 |4 |5 |6 |7 |8 |9 |10|11|12|13|14|15|
|  |  |  |  |  |  |  |  |  |  |  |  |  |  |  |
|__|__|__|__|__|__|__|__|__|__|__|__|__|__|__|
        \   Q1     /\        Q2-4            /
```

200mV Power Leads Chassis #2

```
_____________________________________________
|1 |2 |3 |4 |5 |6 |7 |8 |9 |10|11|12|13|14|15|
|  |  |  |  |  |  |  |  |  |  |  |  |  |  |  |
|__|__|__|__|__|__|__|__|__|__|__|__|__|__|__|
        \   Q3     /\     Q5     /\    T6    /
```

100 V QDU CHASSIS #1

```
_____________________________________________
|1 |2 |3 |4 |5 |6 |7 |8 |9 |10|11|12|13|14|15|
|  |  |  |  |  |  |  |  |  |  |  |  |  |  |  |
|__|__|__|__|__|__|__|__|__|__|__|__|__|__|__|
   \    Q1     /\          Q2-4     /\    Q3    /
```

100 V QDU CHASSIS #2

```
 ____________________________________________________________
|1 |2 |3 |4 |5 |6 |7 |8 |9 |10|11|12|13|14|15|
|  |  |  |  |  |  |  |  |  |  |  |  |  |  |  |
|__|__|__|__|__|__|__|__|__|__|__|__|__|__|__|
          \   Q5    /\        T6            /
```

The non-isolated +/- 10 volt chassis will have 30 channels. The first 6 channel outputs are on a 15 pin 'D' connector. The remaining 24 channel outputs are on two 25 pin 'D' connectors.

The 200 mV and 100 V chassis will be identical except for the cards which are inserted. There are 15 channels per chassis. The first 3 channel outputs are on a 15 pin 'D' connector. The remaining 12 channel outputs are on a 25 pin 'D' connector.

The 30 channel scaler cards will map to these five chassis in the following way:

Scaler Card #1

```
 ____________________________________________________________________________________
|1|2|3|4|5|6|7|8|9|1|1|1|1|1|1|1|1|1|1|2|2|2|2|2|2|2|2|2|2|3|
| | | | | | | | | |0|1|2|3|4|5|6|7|8|9|0|1|2|3|4|5|6|7|8|9|0|
|_|_|_|_|_|_|_|_|_|_|_|_|_|_|_|_|_|_|_|_|_|_|_|_|_|_|_|_|_|
              \        +/-  10 v Chassis                    /
```

Scaler Card #2

```
 ____________________________________________________________________________________
|1|2|3|4|5|6|7|8|9|1|1|1|1|1|1|1|1|1|1|2|2|2|2|2|2|2|2|2|2|3|
| | | | | | | | | |0|1|2|3|4|5|6|7|8|9|0|1|2|3|4|5|6|7|8|9|0|
|_|_|_|_|_|_|_|_|_|_|_|_|_|_|_|_|_|_|_|_|_|_|_|_|_|_|_|_|_|
\  spare    /\   200mV #1            /\  200 mV #2          /
```

Scaler Card #3

```
 ____________________________________________________________________________________
|1|2|3|4|5|6|7|8|9|1|1|1|1|1|1|1|1|1|1|2|2|2|2|2|2|2|2|2|2|3|
| | | | | | | | | |0|1|2|3|4|5|6|7|8|9|0|1|2|3|4|5|6|7|8|9|0|
|_|_|_|_|_|_|_|_|_|_|_|_|_|_|_|_|_|_|_|_|_|_|_|_|_|_|_|_|_|
\spare/\          100 V #1          /\   100 V #2          /
```

1.3.2.1.2 Hardware

The Quench Protection Monitor Hardware for Q_1, Q_{2-4}, Q_3, Q_5 and Q_6 will all be housed in a single VME crate. (See figure 1.3.2.1.2-1.) In this crate is a single CPU card with 1 M byte of memory on board, a 4 M byte memory card, a control card, three scaler cards, a global functions card, a system services card and a token ring card.

The CPU, memory and token ring cards are all purchased from outside vendors.

The system services, scaler, control and global functions cards have been designed in-house.

1.3.2.3 I Clock Generator

There will be no di/dt inputs from I clock modules as there have been in past systems. This function will be done in software. Since the sources for the di/dt calculations have always come from the transductors anyway and the software can calculate the di/dt with as much accuracy as the hardware circuitry, there is no safety compromise.

1.3.2.4 QPM-Fast Bypass Interface

The fast bypass interface circuitry will be the same as in the past. The QPM will send a 720 Hz heartbeat signal to the hardwire loop interface and stop sending the signal if any one of the five circuits wants to pull the loop.

1.3.2.5 Heater Firing Units

The heater firing units will be identical to the existing ones in the Tevatron. There will be one HFU for each circuit (two for the Q_{2-4} circuit) for a total of six at BØ and six at DØ.

1.3.2.6 Standby Power

Standby power will be provided by uninterrupted power supplies at both buildings. These will be the same units that are presently used at BØ.

figure 1.3.2.1.2-1

9/29/88
gst

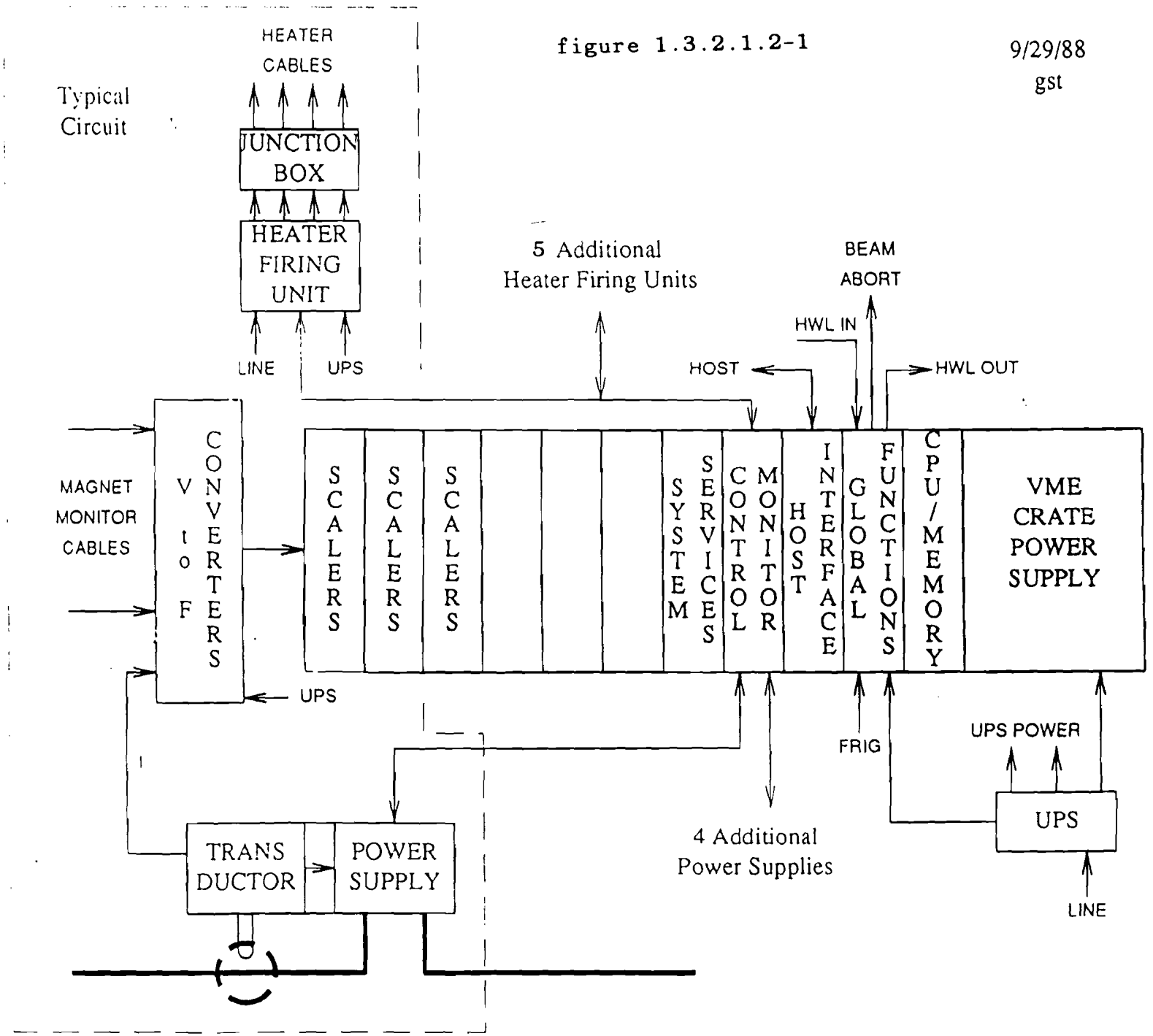

LOW BETA HIGH CURRENT QUAD QUENCH PROTECTION BLOCK DIAGRAM

1.4) Magnet Dimensional Requirements

Cross Section

Q_1 see figure 1.4-1A, 1.4-1B

Q_4 see figure 1.4-2 (note 1)

Longitudinal

Q_1 - Q_4 see figure 1.4-3

see table 1.4-1

Magnet Dimension Summary

See table 1.4-2 and figure 1.4-4

Notes:

1. DØ note 398 (5/29/86).

Figure 1.4-1A

Q4 Position Relative to Main Ring at DØ

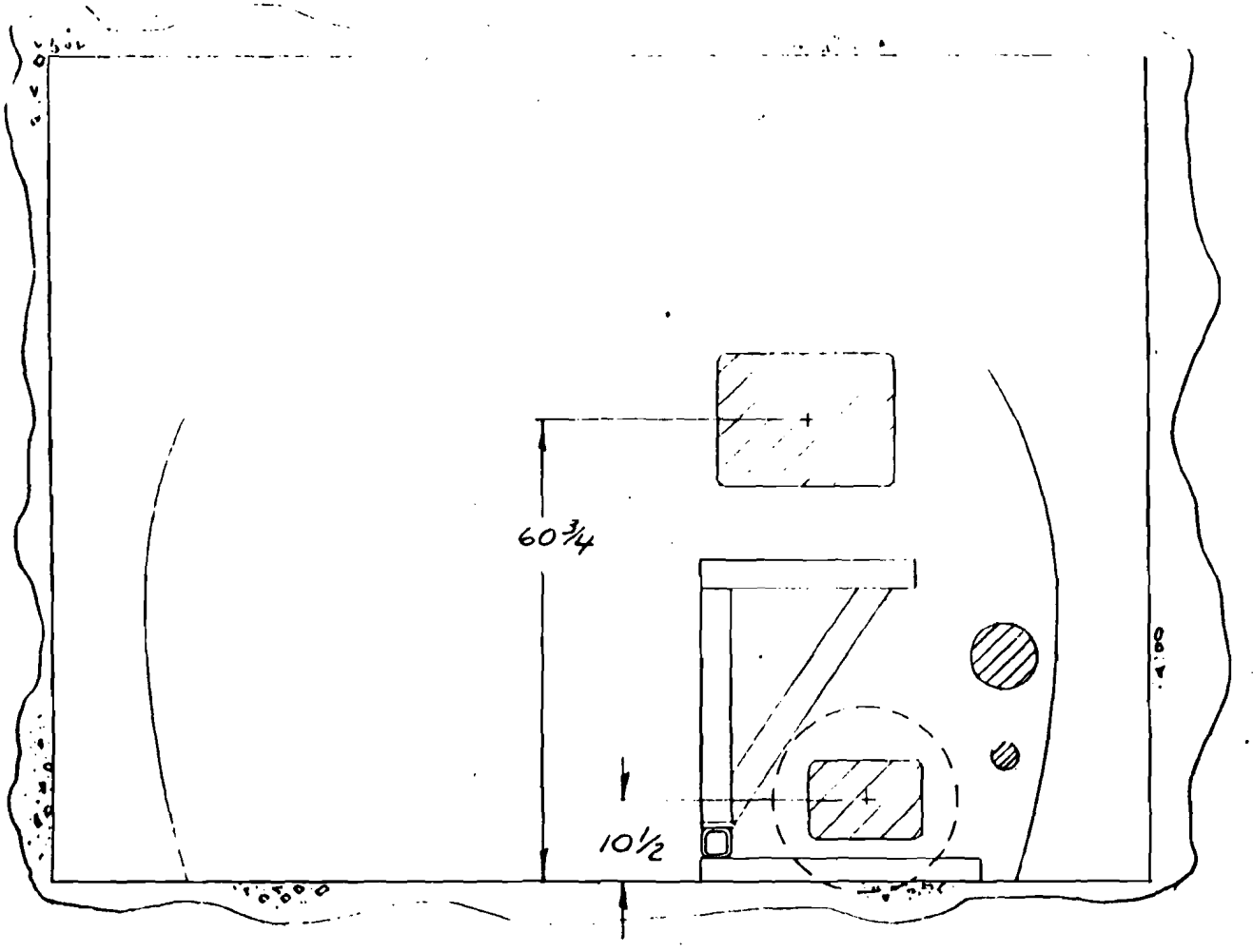

CROSS-SECTION @ MOST CONGESTED AREA
(END OF SMALL TUNNEL)

REV.	DESCRIPTION	DRAWN	DATE
		APPD.	DATE

ITEM NO.	PART NO.	DESCRIPTION OR SIZE	QTY. REQ.
		PARTS LIST	

UNLESS OTHERWISE SPECIFIED
FRACTIONS ± DECIMALS ± ANGLES ±
1. BREAK ALL SHARP EDGES 1/64 MAX.
2. DO NOT SCALE DWG.
3. DIMENSIONING IN ACCORD WITH ANSI Y14.5 STD'S.
MAX. ALL MACHINED SURFACES

ORIGINATOR
DRAWN
CHECKED
APPROVED
USED ON
MATERIAL-

FERMI NATIONAL ACCELERATOR LABORATORY
UNITED STATES DEPARTMENT OF ENERGY

1/2" = 12"

SCALE | FILMED | DRAWING NUMBER | REV.

Figure 1.4-1B

Q4 Position Relative to Main Ring at BØ

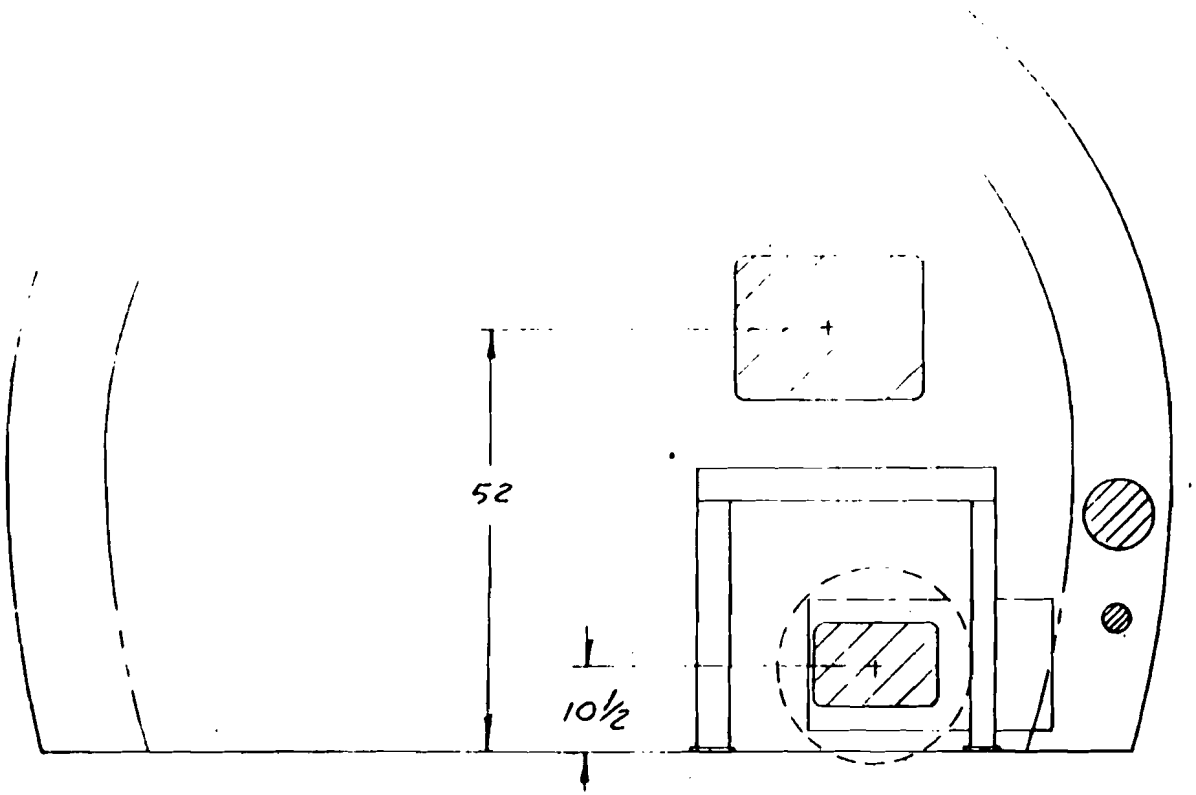

D-12

CROSS-SECTION @ MOST CONGESTED AREA
(BEGINING OF LARGE TUNNEL)

REV.	DESCRIPTION	DRAWN	DATE
		APPD.	DATE

ITEM NO.	PART NO.	DESCRIPTION OR SIZE	QTY. REQ.
PARTS LIST			

UNLESS OTHERWISE SPECIFIED			ORIGINATOR	
FRACTIONS	DECIMALS	ANGLES	DRAWN	
±	±	±	CHECKED	
1. BREAK ALL SHARP EDGES 1/64 MAX.			APPROVED	
2. DO NOT SCALE DWG.			USED ON	
3. DIMENSIONING IN ACCORD WITH ANSI Y14.5 STD'S.				
√ MAX. ALL MACHINED SURFACES			MATERIAL-	

FERMI NATIONAL ACCELERATOR LABORATORY
UNITED STATES DEPARTMENT OF ENERGY

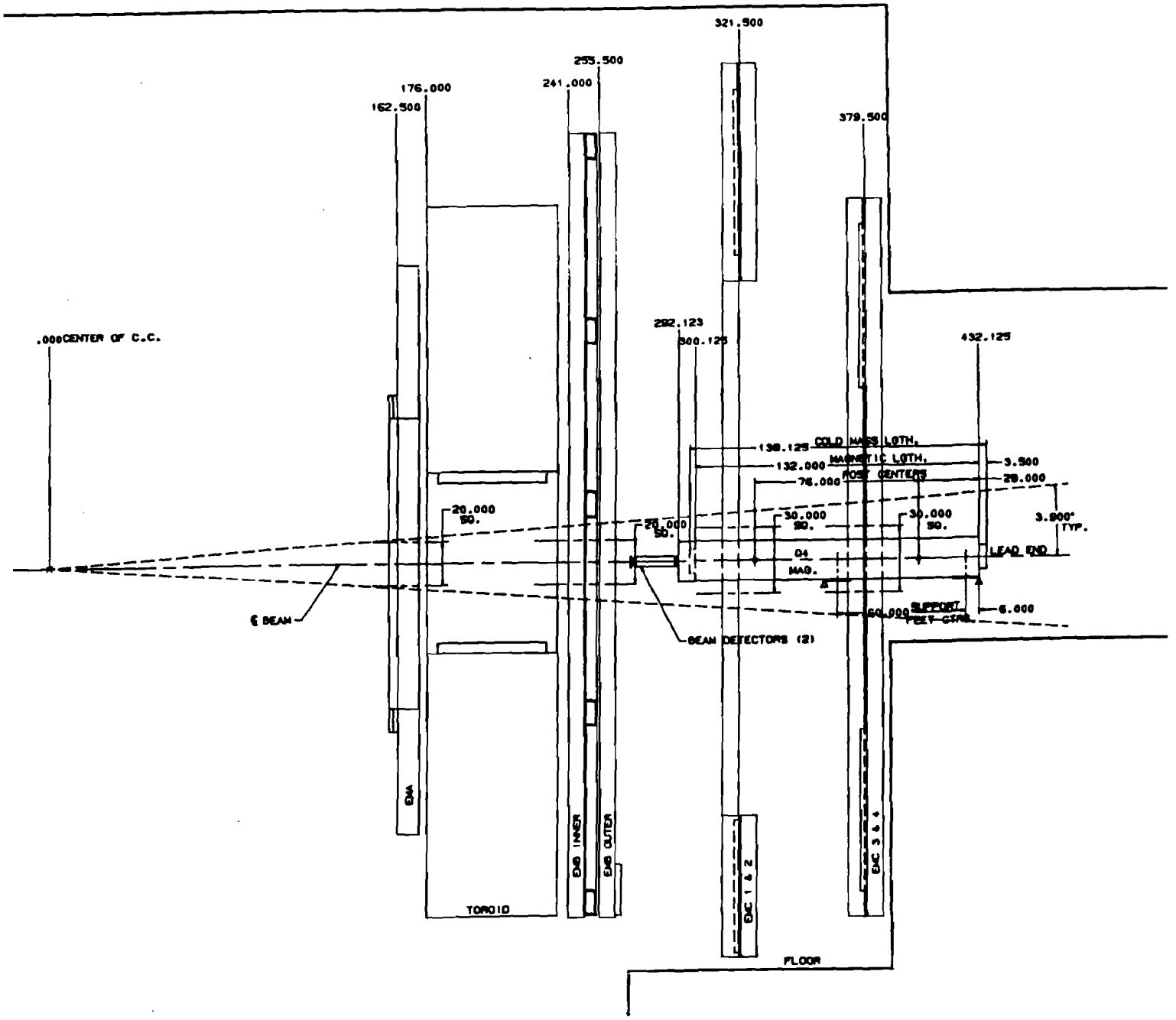

ELEV. @ Q4 IN D-Ø COLLISION HALL

Figure 1.4-2

SCALE 1/16" = 1"

AM/08/09 11.18.10 94147

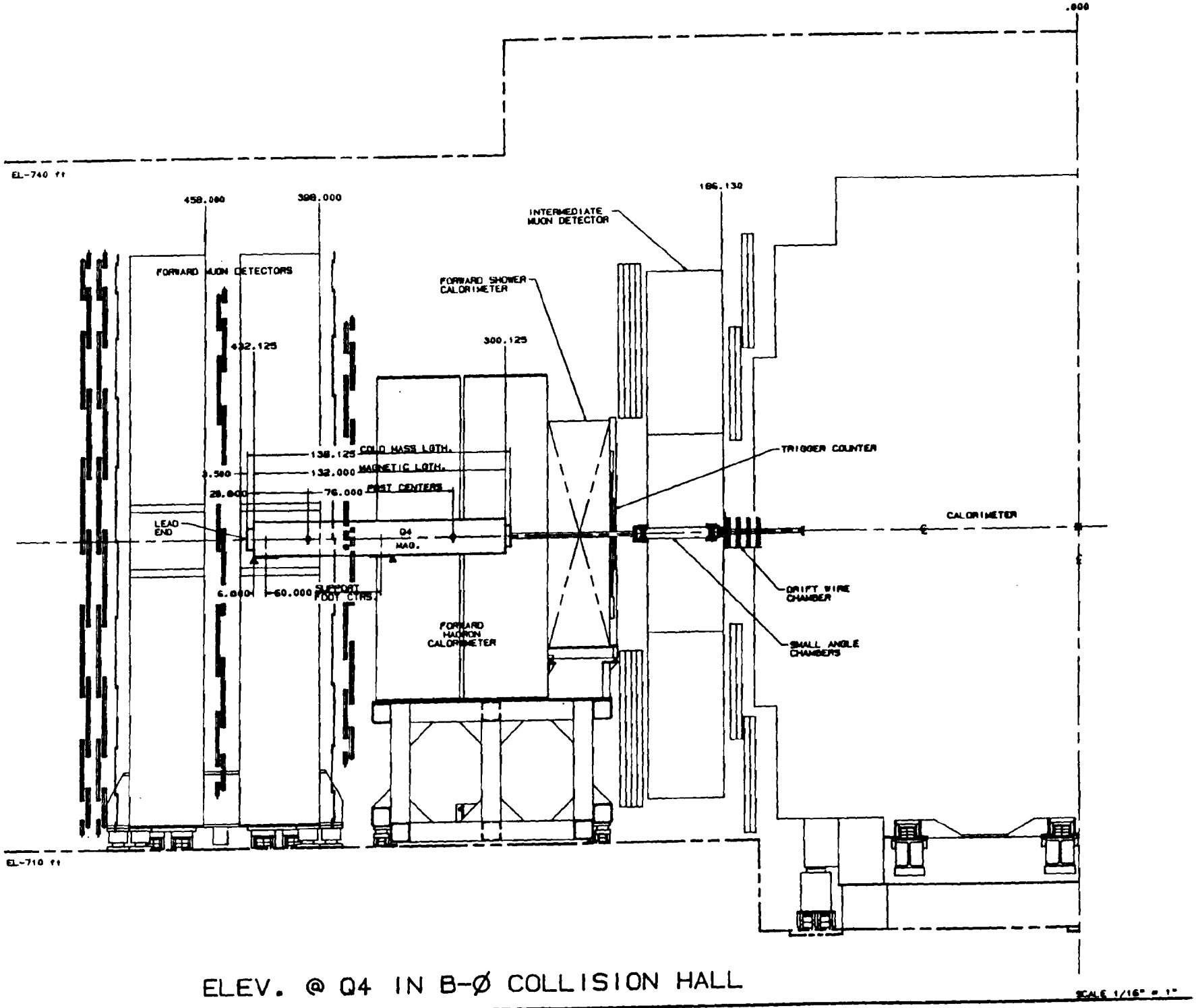
EL-740 ft
458.000
398.000
186.130
INTERMEDIATE MUON DETECTOR
FORWARD MUON DETECTORS
FORWARD SHOWER CALORIMETER
432.125
300.125
138.125 COLD MASS LGTH.
132.000 MAGNETIC LGTH.
76.000 POST CENTERS
TRIGGER COUNTER
CALORIMETER
LEAD END
Q4 MAG.
6.000
60.000 SUPPORT FOOT CTRS.
DRIFT WIRE CHAMBER
FORWARD HADRON CALORIMETER
SMALL ANGLE CHAMBERS
EL-710 ft
ELEV. @ Q4 IN B-Ø COLLISION HALL
SCALE 1/16" = 1"

Figure 1.4-3

Table 1.4-2

Magnet Length Requirements

(Refer to Figure 1.4-4)

Low-Beta Quads	Slot Length A	Bore Tube B	Cryostat Overall C	Yoke D
Q_1	72.823" 128.972" Quad & Spool	70.562 ≃152.5	≃62.938	≃60.57
Q_2	156.381	≃157.875	≃138.0	≃138.5
Q_3	266.5"	≃247.25	≃243.875	≃238.5
Q_4	166.500"	≃152.5	≃138.0	≃138.5
Q_5	72.823" 128.972" Quad & Spool	70.562 ≃152.5	≃62.938	≃60.57

Figure 1.4-4

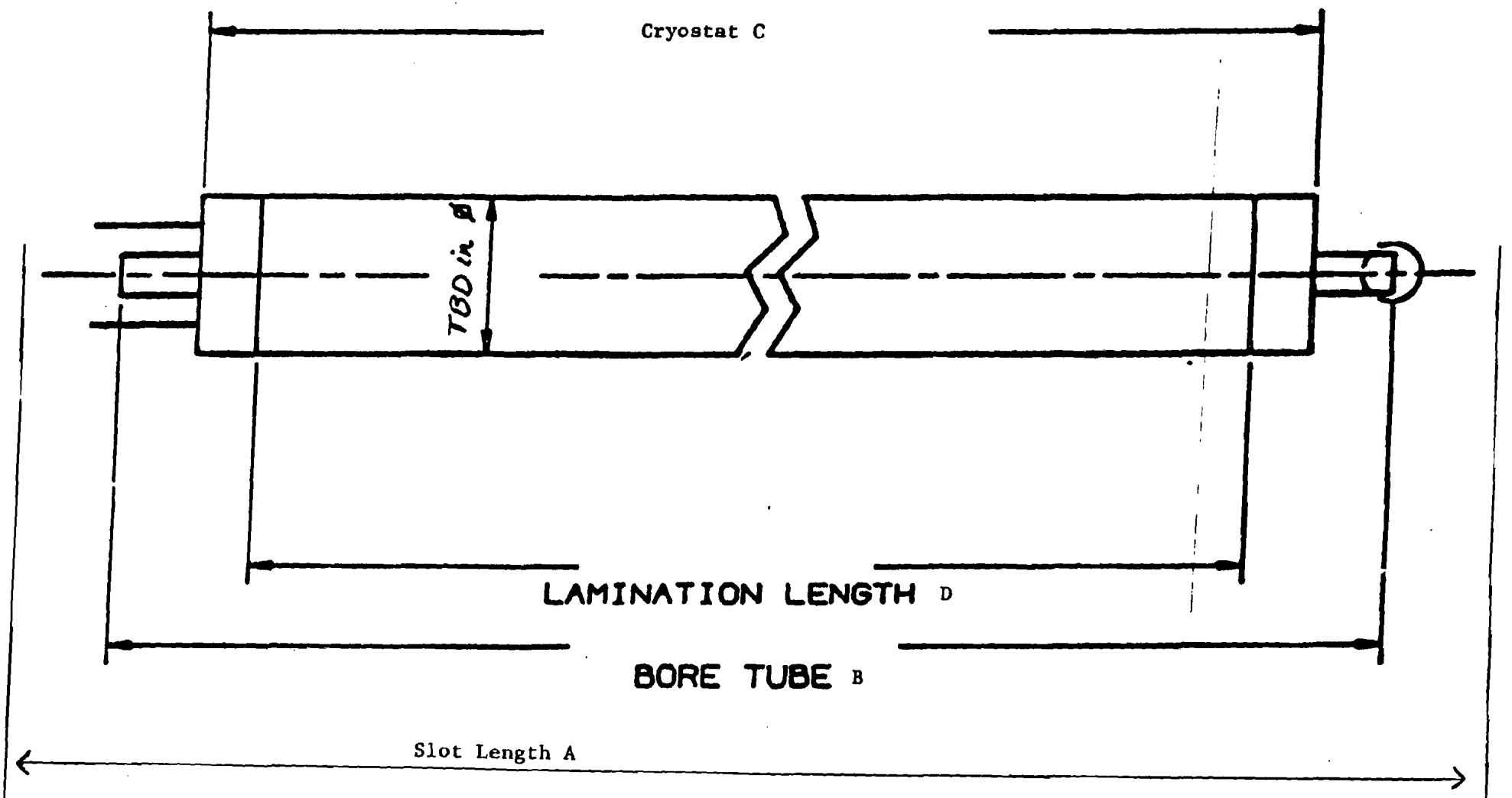

NOTES:

1. HEATER AND INSTRUMENTION LEADS SHALL EXTEND AT LEAST TBC cms FROM THE LAST COLLAR LAMINATION.

1.5) Tunnel Layout Requirements

1.5.1) Mechanical/Electrical

Karl Koepke - June 10, 1987

<u>BØ/DØ Low-Beta Tunnel Layout</u>

Revision 2

The insertions at BØ and DØ are optically identical and are based on the revised Tom Collins lattice (ATC1). The common magnetic lattice is shown in Figure 1.5.1-1 with all dimensions shown in inches. The insertion dipole geometry is identical to the dipole configuration presently installed at BØ. The dipoles in the half-cell adjacent to the DØ straight section will have to be moved.

Low-beta and matching to the accelerator arcs are achieved with nine new quadrupole pairs. The inner five quadrupole pairs (Q_1 through Q_5) are separate magnets which are placed symmetrically relative to the center of the straight section. The remaining quadrupole pairs (T_6 through T_9) are mounted as part of new low-beta spool pieces which replace standard spool pieces located at the 43, 44, 46, 47, 13, 14, 16 and 17 tunnel locations adjacent to the low-beta straight section. The arc matching quadrupoles (Collins quadrupoles) normally located at the 49 and 11 tunnel locations are removed.

Figure 1.5.1-2 and Figure 1.5.1-3 show the Q_1 through Q_5 lattice region with interface locations added. All dimensions are in inches except where otherwise indicated. The numbers within the rectangles represent the magnetic lengths of the magnets. The dashed lines show the locations of slot lengths; or space allocated for end attachments; or in the case of the cold bypasses, the available warm bore tube length. The available warm Q_1 to Q_2 gap for electrostatic separators is 8.73 m.

The large folded drawings show the actual components of the low-beta insertion and the modifications required at DØ to enable fixed target extraction. The component interfaces are labelled relative to the main ring DUSAF coordinate system. The 128.972 in. Q_1 and Q_2 slot lengths are identical and are split into two components; a separate quadrupole with a magnetic length of 54.07 in. and a new spool. The spool contains a 30 in. vertical-horizontal dipole correction package; vertical and horizontal beam detectors; a vacuum barrier; cryogenic reliefs; two 5 kA power leads; a 50 A power lead stack; and possibly, quench stoppers and safety leads.

The triplet Q_2, Q_3 and Q_4 have an interface geometry similar to the SSC design. Except as detailed below, the remaining elements have Tevatron style interfaces. The triplet feedcan has an SSC interface and a Tevatron interface. The 11-location barrier box needs a special mirror image "upstream" Tevatron interface as the elements bracketed by the Q_1 magnets are rotationally symmetric around the center of the straight section. The H82D Collins quadrupole that mates to this barrier box at DØ during fixed target operation also requires a special interface.

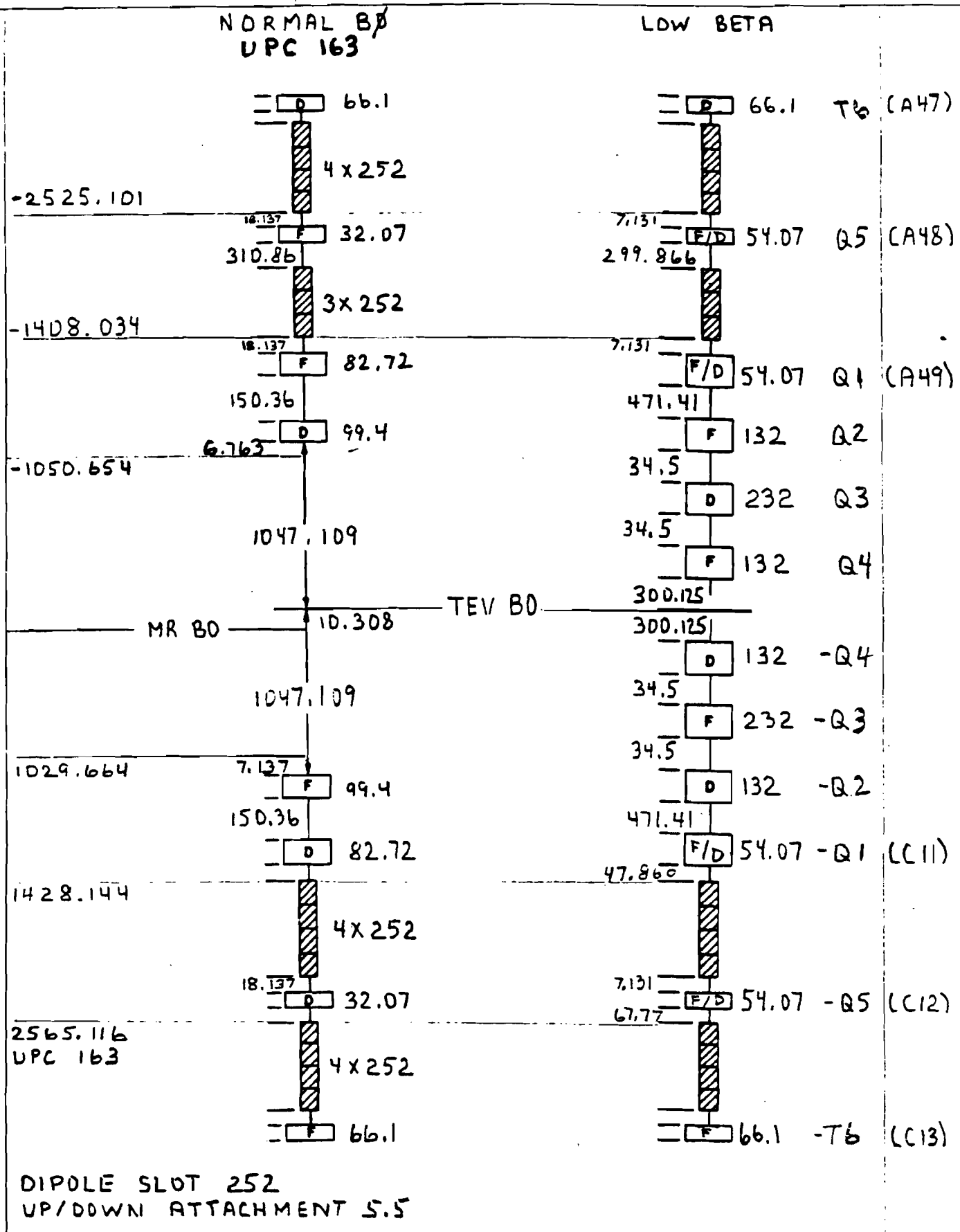

Figure 1.5.1-1 Collins Low-Beta Lattice

Figure 1.5.1-2 Upstream T. Collins Low Beta Layout

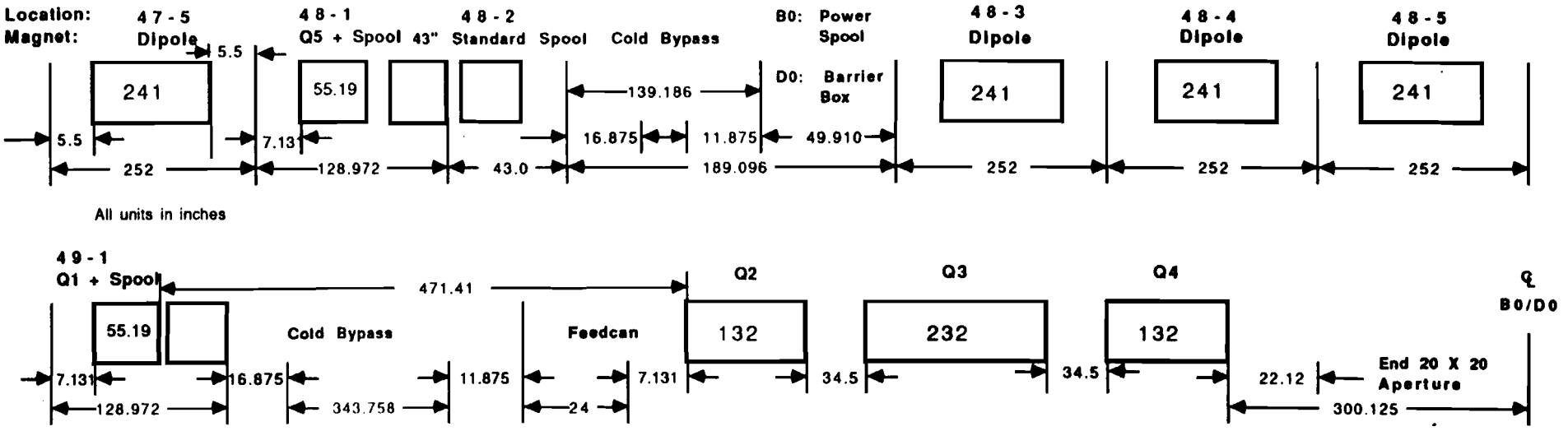

Figure 1.5.1-3 Downstream T. Collins Low Beta Layout

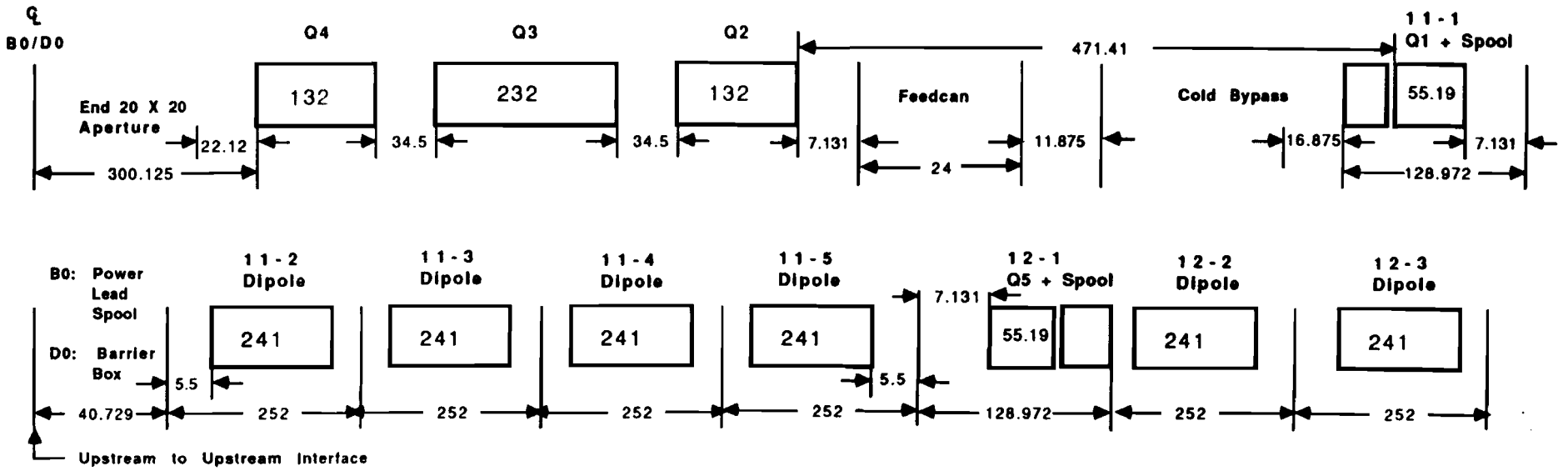

DØ Low-Beta Component List

J. C. Theilacker
6/9/88

Component	#	Leads	Reliefs	Slot	Comments
<u>Quads</u>					
Q_1/Q_5	4	one-phase		72.823	reversible
Q_2	2	none	one-phase	156.381	reversible
Q_3	2	none	one-phase	266.500	reversible
Q_4	2	none	none	166.500	reversible
82" Collins Quad	1	none	none	118.991	crossed pipes
82" Collins Quad	1	none	none	118.991	large one-phase bellow
99" Collins Quad	2	none	none	109.810	normal
<u>Spools</u>					
Q_1/Q_5 Spool	4	2-5000, 6-50 amp	one/two-phase, N2	56.149	reversible
T_6	2	2-5000, 6-50 amp	one/two-phase, N2	72.000	
T_7, T_8, T_9	6	2-2000, 6-50 amp	one/two-phase, N2	72.000	
<u>Interface Components</u>					
US Barrier Box	1	2-5000 amp	two-phase (DS)	49.910	
DS Barrier Box	1	2-5000 amp	two-phase (DS)	40.729	
US Bypass	1	none	none	139.186	110.463" F-F warm
US Collider Bypass	1	none	none	372.508	343.758" F-F warm
DS Collider Bypass	1	none	none	372.508	343.758" F-F warm
US Fixed Target Bypass	1	none	none	78.121	343.758" F-F warm
DS Fixed Target Bypass	1	none	none	69.311	40.561" F-F warm
Six Power Lead Can	2	6-5000 amp	one-phase supply, one-phase return, two-phase supply	24.000	reversible
<u>Test Components</u>					
MTF Feedcan Adapter	1	none	2 one-phase	?	TeV interface adapt.
MTF Turnaround	1	none	none	?	
Lab 2 Lead Test Can	1	2000 amp	one-phase	NA	
Lab 2 Lead Test Can	1	5000 amp	one-phase	NA	

BØ Low-Beta Component List

J. C. Theilacker
6/9/88

Component	#	Leads	Reliefs	Slot	Comments
<u>Quads</u>					
Q_1/Q_5	4	none		72.823	reversible
Q_2	2	none	one-phase	156.381	reversible
Q_3	2	none	one-phase	266.500	reversible
Q_4	2	none	none	166.500	reversible
<u>Spools</u>					
Q_1/Q_5 Spool	4	2-5000, 6-50 amp	one/two-phase, N2	56.149	reversible
T_6	2	2-5000, 6-50 amp	one/two-phase, N2	72.000	
T_7, T_8, T_9	6	2-2000, 6-50 amp	one/two-phase, N2	72.000	
DS Short Special Spool	1	2-5000 amp	two-phase (DS)?	40.729	crossed pipes
<u>Interface Components</u>					
US Bypass	1	none	none	139.186	110.463" F-F warm
US Collider Bypass	1	none	none	372.508	343.758" F-F warm
DS Collider Bypass	1	none	none	372.508	343.758" F-F warm
Six Power Lead Can	2	6-5000 amp	one-phase supply, one-phase return, two-phase supply	24.000	reversible

DØ/BØ Low-Beta Spare Component List

J. C. Theilacker

6/9/88

Component	#	Leads	Reliefs	Slot	Comments
<u>Quads</u>					
Q_1/Q_5	2	none	one-phase	72.823	
Q_2	1	none	one-phase	156.381	
Q_3	1	none	one-phase	266.500	
Q_4	1	none	none	166.500	
82" Collins Quad	1	none	none	118.991	normal w/mod. kit
82" Collins Quad	1	none	none	118.991	normal w/mod. kit
99" Collins Quad	2	none	none	109.810	normal
<u>Spools</u>					
Q_1/Q_5 Spool	2	2-5000, 6-50 amp	one/two-phase, N2	56.149	reversible
T_6	2	2-5000, 6-50 amp	one/two-phase, N2	72.000	
T_7, T_8, T_9	4	2-2000, 6-50 amp	one/two-phase, N2	72.000	
DS Short Special Spool	1	2-5000 amp	two-phase?	40.729	crossed pipes
<u>Interface Components</u>					
US Barrier Box	1	2-5000 amp	two-phase (DS)	49.910	
DS Barrier Box	1	2-5000 amp	two-phase (DS)	40.729	
US Bypass	1	none	none	139.186	110.463" F-F warm
US Collider Bypass	1	none	none	372.508	343.758" F-F warm
DS Collider Bypass	1	none	none	372.508	343.758" F-F warm
US Fixed Target Bypass	1	none	none	78.121	343.758" F-F warm
DS Fixed Target Bypass	1	none	none	69.311	40.561" F-F warm
Six Power Lead Can	1	6-5000 amp	one-phase supply, one-phase return	24.000	reversible

1.5.2) Cryogenic Layout

Low-Beta Lead Box

J. C. Theilacker

11-25-87

Effect on Q_2

- Anchors at lead box end of Q_2
  - * single-phase
  - * shield
  - * thru pipes
- Non-standard interface at lead box end of Q_2
- Lead box must wrap around backside of Q_2
- Vacuum and single-phase "bellows" must store on Q_2

Effect on low-beta support beam

- Outriggers required to support lead box
- Bottom of box may be required to be lower than bottom of low-beta quads

Effect on existing enclosures

- Tunnel floor must be lowered at lead box each side of BØ

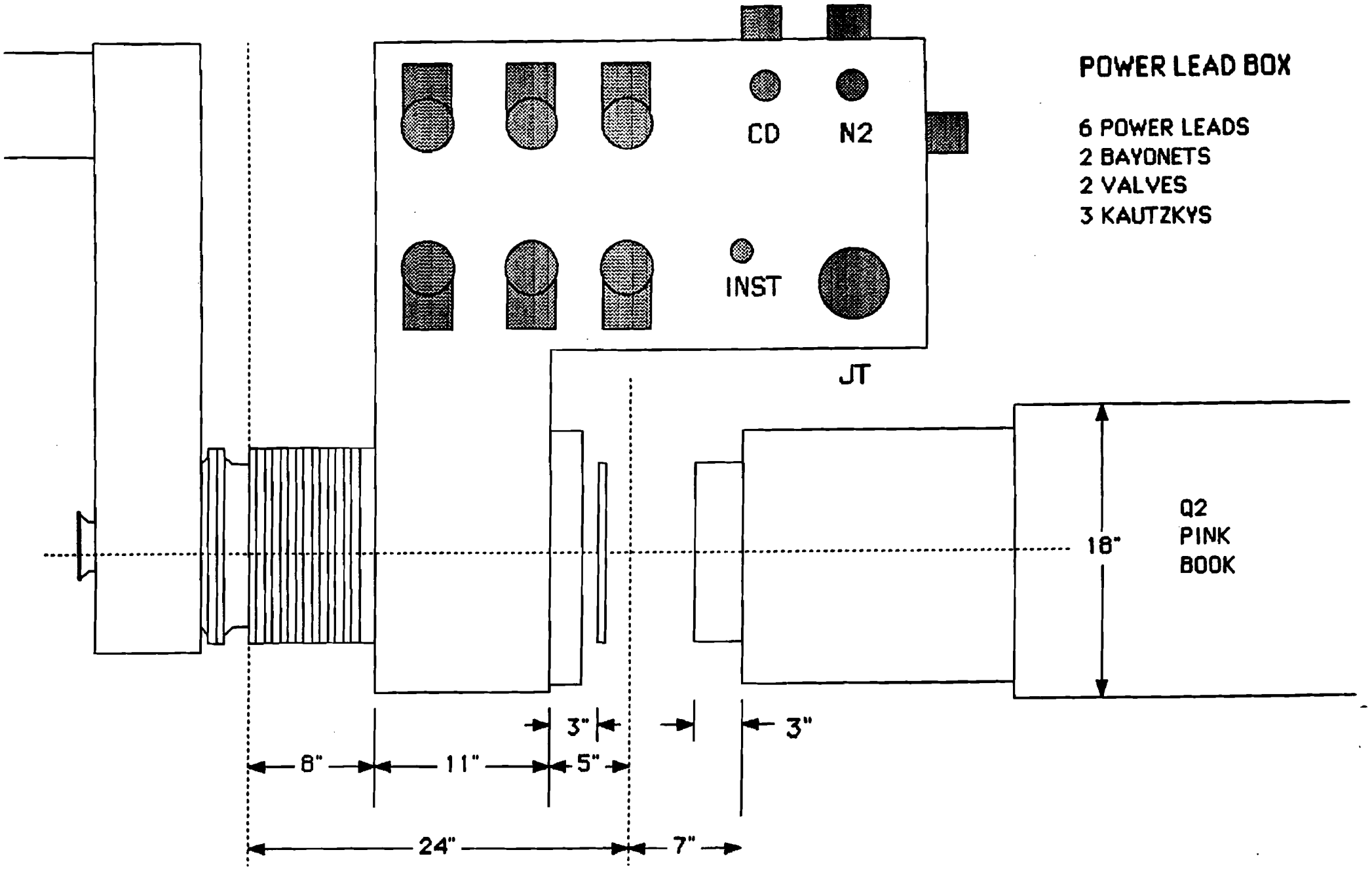
POWER LEAD BOX
6 POWER LEADS
2 BAYONETS
2 VALVES
3 KAUTZKYS
CD
N2
INST
JT
Q2
PINK
BOOK
18"
3"
3"
8"
11"
5"
24"
7"

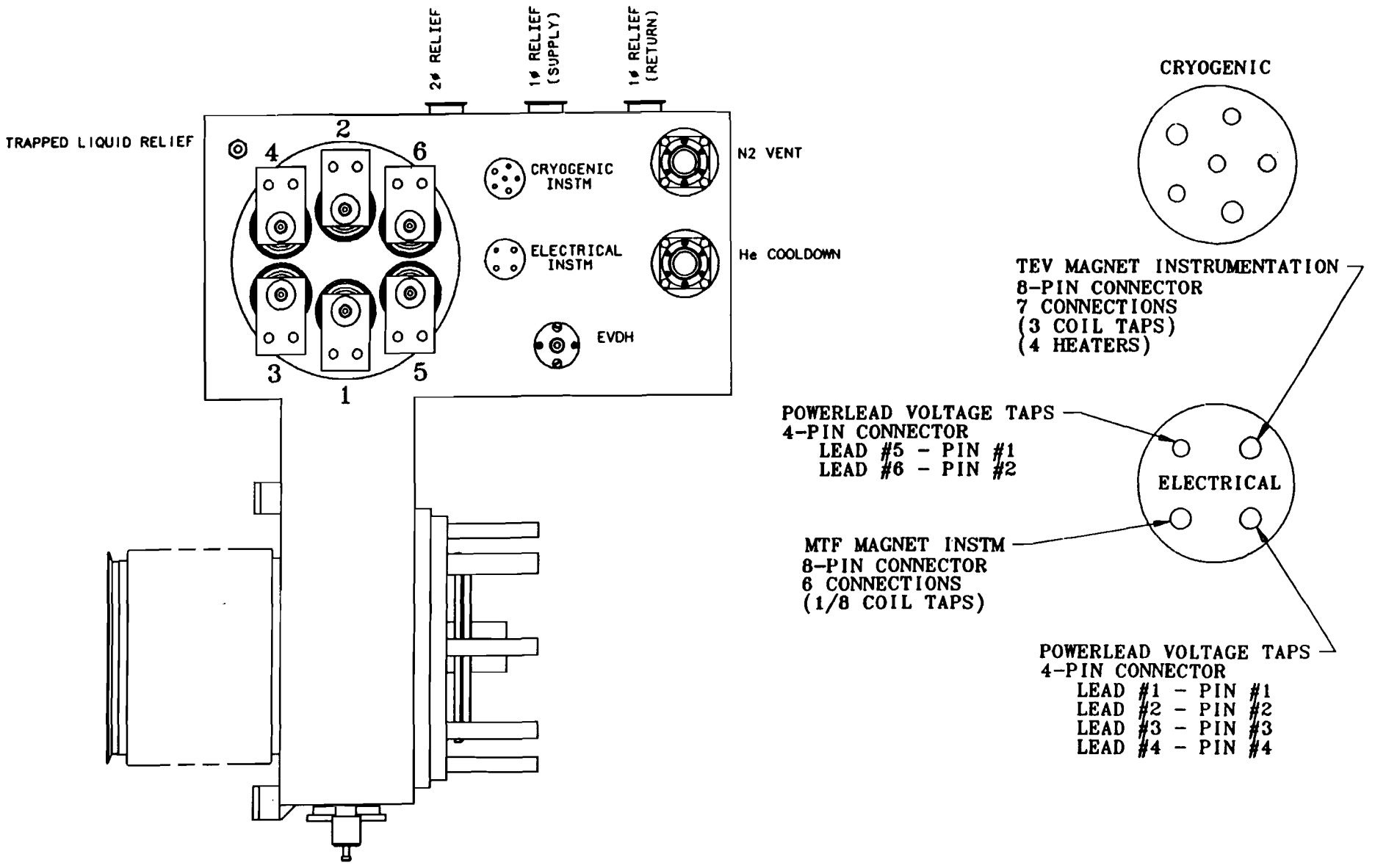

LOW BETA TRIPLET POWERLEAD FEED CAN INSTRUMENTATION

11-10-89

1.6) Alignment Precision Requirements

Alignment Limitations

* MTF alignment lug tolerance for Tevatron (Low-Beta) quads	-	7 mils
* Wire measurements of typical error of field center to beam detector center	-	10 mils
* Tunnel survey reproducibility of quad position	-	10 mils
* Beam detector electronics offset variation (software has compensation capability)	-	20 mils
RMS sum of errors	-	16 mils

The correction range of the system now at BØ is approximately 20 mils. The new system, operating at a β^* of 0.5 will have a correction range of about 17.5 mils.

LOW BETA ALIGNMENT SPECIFICATIONS

All coil alignment is done cold with the exception of the TSL spool (contains DD correction coil package). The Beam Position Detector offsets are given with respect to the magnetic centerline of the quad element of a device again with the exception being the TSL spool where the alignment is with respect to the beam tube centerline. The BPM alignment is done at room temperature and corrections are obtained by observing the change in beam tube position from warm to cold and are used to adjust the offsets of the detectors if necessary in order to obtain the required alignment precision.

The operation requirements combined with the inherent measurement limitations lead to the following guidelines for alignment tolerances of the Low Beta devices:

Quads

	$\Delta x, \Delta y$	roll	Reference
717 coil	7 mils	0.5 mrad	Absolute
Beam Detector offset	10 mils	17 mrad	Magnetic cl of B13XXF (Q4)

Spools

717 quad correctors	7 mils	0.5 mrad	Absolute
S5 quad correctors	20 mils	0.5 mrad	Absolute
DD correction pkg	30 mils	60 mrad	spool cl
DDQ correction pkg	20 mils	17 mrad	trim quad/spool cl
DSQ correction pkg	20 mils	17 mrad	trim quad/spool cl
Beam Detector offset	10 mils	17 mrad	spool cl
S5/DSQ	20 mils	10 mrad	Relative
717/DSQ	20 mils	10 mrad	Relative
DD,DDQ/BPM	30 mils	17 mrad	Relative

In order to achieve the required alignment precision the Alignment Group requested that tooling balls be substituted for the lugs which are commonly used for Tevatron devices. Figure 1.6-1 shows the tooling ball locations for the Low Beta magnets and spools.

1.7) Changeover Scenarios

FIXED TARGET-COLLIDER FIXED TARGET CHANGEOVER

Revision 2

Karl Koepke, Tom Peterson,
Larry Sauer, Jay Theilacker

A first estimate changeover schedule from fixed target operation to colliding beam operation and back again is attached. The schedule assumes that the changeover operation has stabilized to a routine operation, i.e., all systematic problems have been solved during previous changeovers. The schedule details the work to be performed by the accelerator group. The DØ wall and detector moving estimates are by Dave Eartly.

The first low-beta operation at DØ and the upgrade of BØ to the DØ configuration will each take an additional four to six weeks installation time depending on the extent of prior installation and preparation.

The routine changeover assumes the following system geometry:

Colliding Beam

The Tom Collins low-beta lattice is installed (BØ/DØ Low Beta Lattice, revision 1, Karl Koepke, September 24, 1987). This lattice contains five high-current, independently powered quadrupole doublets (Q_4 and Q_2, Q_3, Q_1, Q_5, T_6) and six medium-current trim quadrupoles (plus and minus T_7, T_8, T_9) at BØ and DØ. The arc matching quadrupoles (Collins quads) at BØ and DØ are removed and presumably will eventually have electrostatic beam separators installed in their place.

Fixed Target

At BØ, the low-beta spool magnets, Q_1 and Q_4 are turned off. The remaining low-beta magnets are reprogrammed to approximate the old fixed target lattice.

At DØ, the low-beta spool magnets are turned off; the Q_5 magnets are reprogrammed to approximate the fixed target lattice; the Q_1, Q_2, Q_3, Q_4 magnets are removed from the lattice and stored in the alcove; the Collins' quadrupoles (BØ dimensions) are reinstalled; and the extraction girders are reset in the straight section.

The present plan assumes warm storage of the DØ low beta magnets and Collins' quadrupoles. Cold storage is no longer possible with the existing interface component designs.

DØ FIXED TARGET TO COLLIDING BEAM CHANGEOVER

Rev. June 8, 1988

	DAYS 1	2	3	4	5	6	7	8	9	10	11	12	13	14	15	16	17	18	19	20
1. Open shell wall	xxxxxxxxx																			
2. Install detector			xxxxxxxxxxxxxxxxxxxxxxxxxxxxxx																	
3. Close shield wall											xxxxxxxxx									
4. Electrical, water, and vacuum connections of extraction girder	xxx																			
5. Warm up Collins' quads	xxx																			
6. Disconnect girder support post - retract girder into alcove	xxxxxxxxx																			
7. Remove support posts from pit			x																	
8. Install low beta girders				xxxxxx																
9. Remove Collins' quads				xxxxxx																
10. Leak check, decontaminate, electrical and vacuum connections						xxx														
11. Survey and safety certification							xxx													
12. Cooldown of low beta magnets								xxx												
13. Reconfigure global trim quads	xxxxxx																			
13. Full power system checks													xxx							

DØ COLLIDING BEAM TO FIXED TARGET CHANGEOVER

Rev. June 8, 1988

	DAYS	1	2	3	4	5	6	7	8	9	10	11	12	13	14	15	16	17	18	19	20
1.	Open shell wall	xxxxxxxxx																			
2.	Install detector				xxxxxxxxxxxx																
3.	Close shield wall								xxxxxxxxx												
4.	Electrical, water, and vacuum connections of extraction girder							x													
5.	Warm up Collins' quads	xxx																			
6.	Disconnect girder support post - retract girder into alcove	xxxxxx																			
7.	Remove support posts from pit		xxxxxx																		
8.	Install low beta girders			xxxxxx																	
9.	Remove Collins' quads					xxxxxx															
10.	Leak check, decontaminate, electrical and vacuum connections								xxxxxx												
11.	Survey and safety certification										xxx										
12.	Cooldown of low beta magnets											xxxxxx									
13.	Reconfigure global trim quads	xxxxxx																			
13.	Full power tests													xxx							

REV.	DESCRIPTION	DRAWN	DATE
		APPD	DATE

PLAN

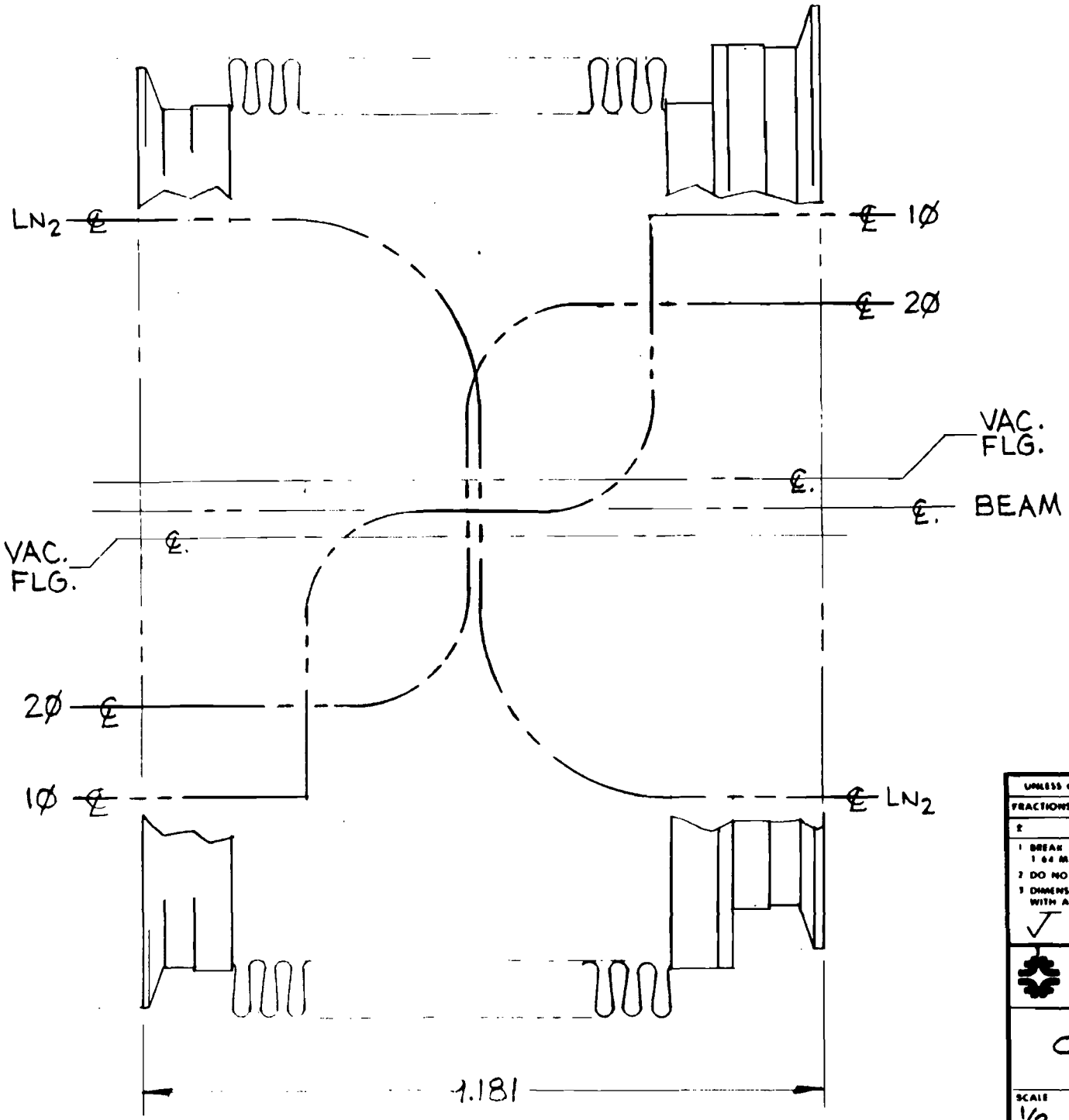

UNLESS OTHERWISE SPECIFIED			ORIGINATOR		
FRACTIONS	DECIMALS	ANGLES	DRAWN		
±	.	±	CHECKED		
1 BREAK ALL SHARP EDGES 1/64 MAX			APPROVED		
2 DO NOT SCALE DWG			USED ON		
3 DIMENSIONING IN ACCORD WITH ANSI Y14.5 STD.			MATERIAL		
√ MAX ALL MACHINED SURFACES					

FERMI NATIONAL ACCELERATOR LABORATORY
U.S. DEPARTMENT OF ENERGY

COLLINS QUAD ADAPTER FIXED TARGET

SCALE	FILMED	DRAWING NUMBER	REV
1/2			

1.8 Trim Dipole Requirements

The trim dipole requirements are listed in summary in Section 1.1, however the detailed location information is provided here.

Loc	Trim Orient	Lattice Spec	Device Type	Corr Element
A43	V	T_8	TSN	DSQ II
A44	H	T_9	TSM	DSQ I
A46	H	T_7	TSM	DSQ I
A47	V	T_6	TSK	DSQ II
A48	H,V	Q_5	TSL	DD(30")
A49	H,V	Q_1	TSP	DDQ
B11	H,V	Q_1	TSP	DDQ
B12	H,V	Q_5	TSL	DD(30")
B13	H	T_6	TSJ	DSQ I
B14	V	T_7	TSN	DSQ II
B16	V	T_9	TSN	DSQ II
B17	H	T_8	TSM	DSQ I
C43	V	T_8	TSN	DSQ II
C44	H	T_9	TSM	DSQ I
C46	H	T_7	TSM	DSQ I
C47	V	T_6	TSK	DSQ II
C48	H,V	Q_5	TSL	DD(30")
C49	H,V	Q_1	TSP	DDQ
D11	H,V	Q_1	TSP	DDQ
D12	H,V	Q_5	TSL	DD(30")
D13	H	T_6	TSJ	DSQ I
D14	H,V	T_7	TSN	DSQ II
D16	H,V	T_9	TSN	DSQ II
D17	V,H	T_8	TSM	DSQ I

In addition to the new low-beta spools listed above, the A48 and C48 locations will contain the original (43S) spools. These spool pieces contain a 30" DSQ1 coil package. The nominal strengths for the correction coil packages when operated at a peak current of 50 A are:

30" DD Spool	Hor	275 kG-in	210 μr @ 1TeV
	Ver	275 kG-in	210 μr @ 1Tev
30" DSQ1	Hor	170 kG-in	130 μr @ 1TeV
30" DDQ	Hor	170 kG-in	130 μr @ 1TeV
	Ver	170 kG-in	130 μr @ 1TeV

The total dipole correction strength during low-beta operation is therefore:

Low-Beta Correction Dipoles

All dipole strengths in μr at 1TeV
Skew quadrupole is in DDQ coil

Location	48	49	11	12
Coil	30" DD 30" DSQ	30"DDQ	30"DDQ	30" DD
Bend @ 50 A	340 Hor 210 Ver	130 Hor 130 Ver	130 Hor 130 Ver	210 Hor 210 Ver
Present BØ running	-41 -73	106 52	65 50	-50 177

The present operating strengths of the BØ correction dipoles reflect the accuracy of the alignment lugs on the installed low-beta quadrupoles and the care taken by the alignment crew during installation. The new low-beta insertions operating at a β^* of 50 cm are expected to require dipole correction settings which are 30% stronger than the present BØ running conditions. At a β^* of 25 cm, the dipole strengths need to be increased an additional 40%. To reduce the probability of having to realign the low-beta magnets, the DD and DDQ dipoles will be tested for 75 A operation and depending on the test results, will be powered with 75 A power supplies.

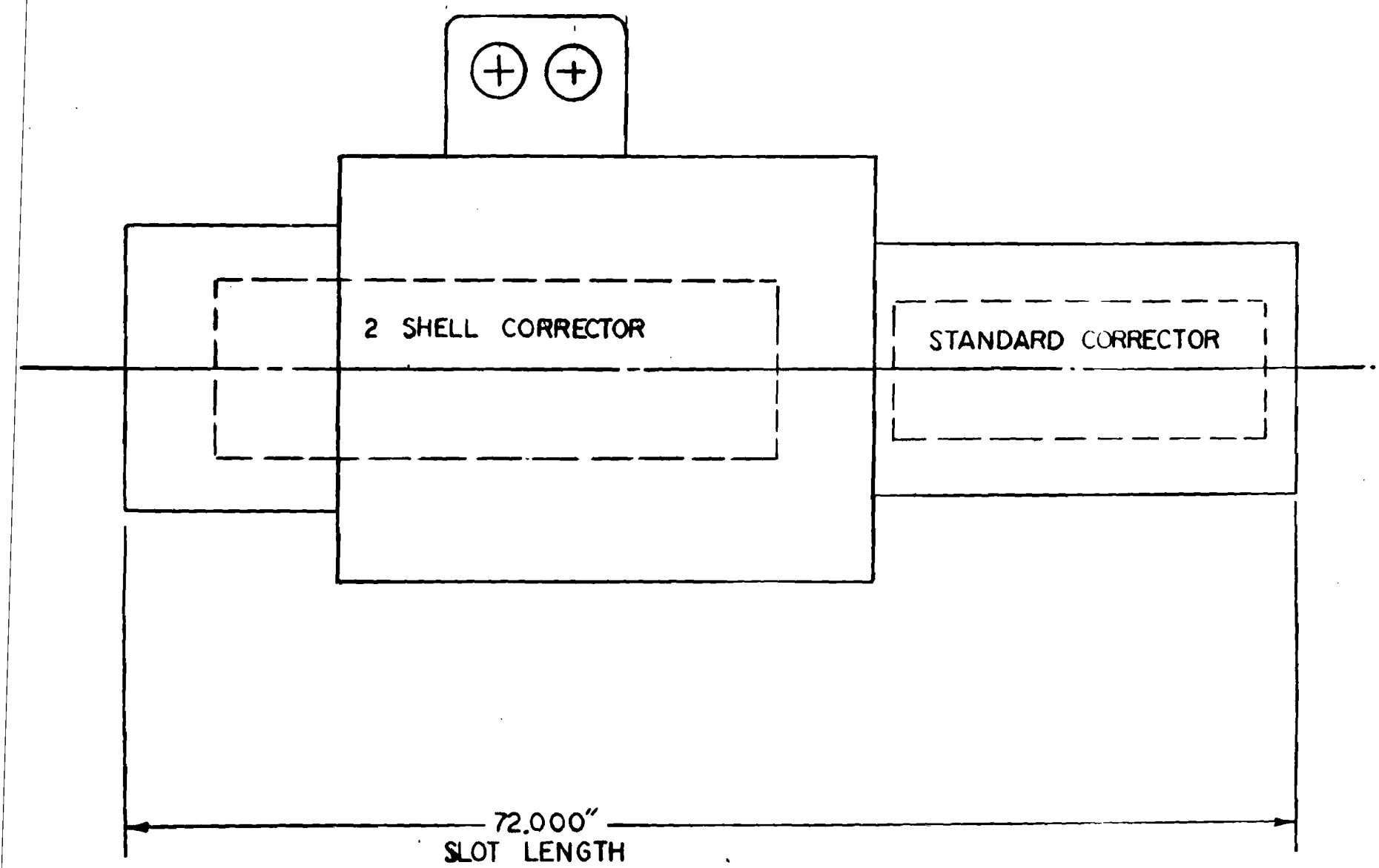

TSJ/TSK (T6) SPOOL

Figure 1.8.1

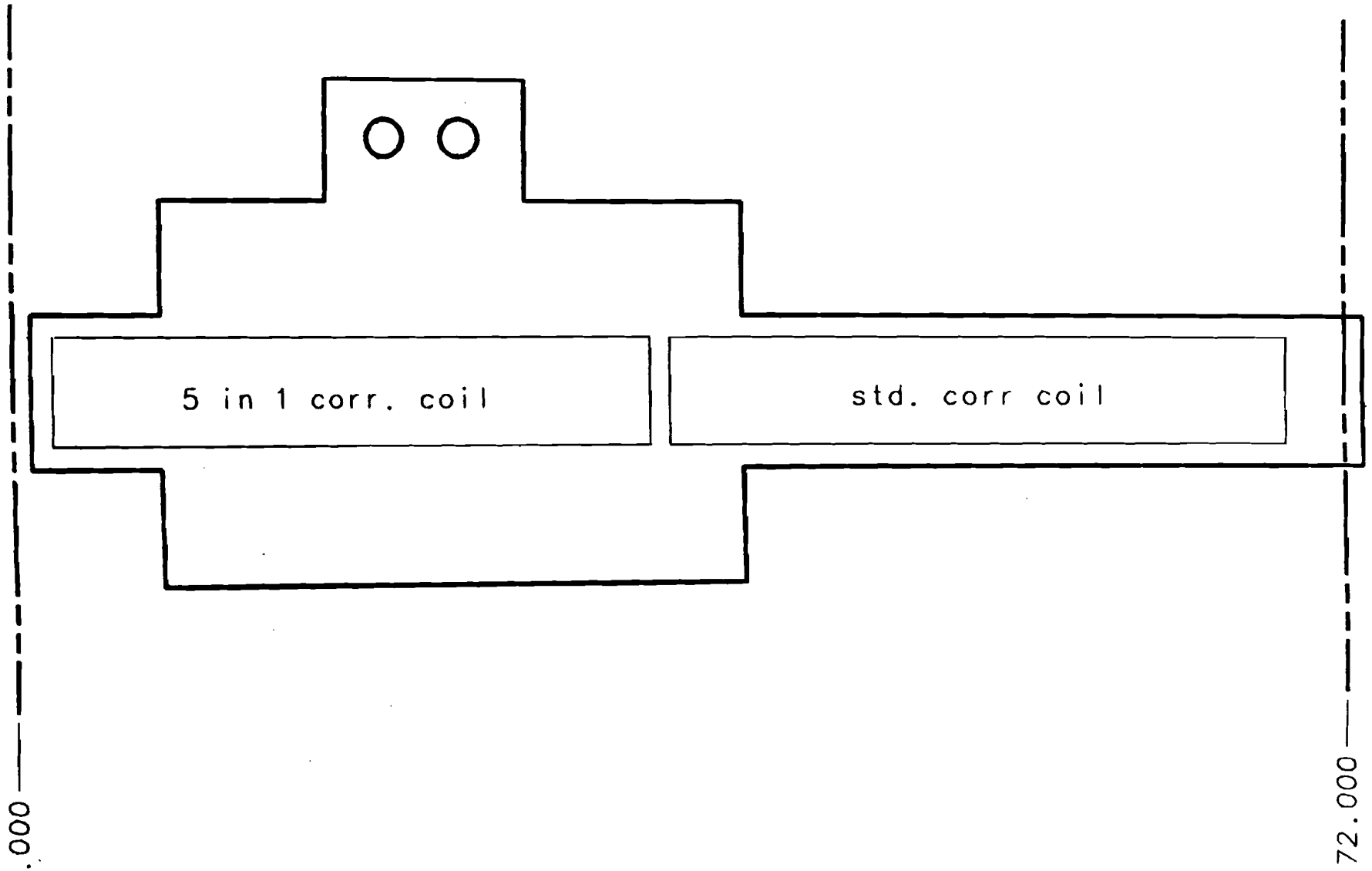

TSM/TSN (T7,T8,&T9) SPOOLS

SCALE 1:8

Figure 1.8.2

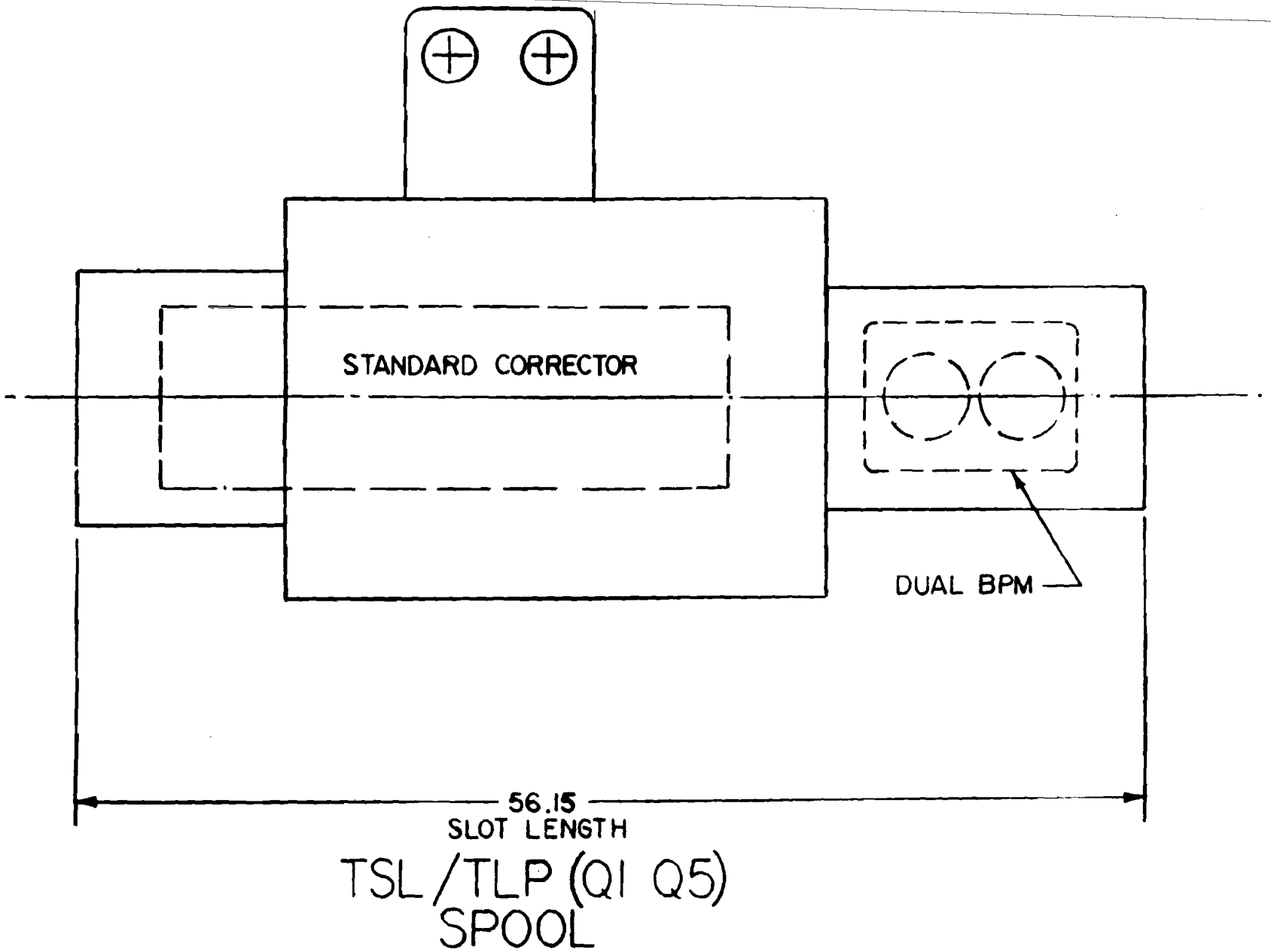
STANDARD CORRECTOR
DUAL BPM
56.15
SLOT LENGTH
TSL/TLP (Q1 Q5)
SPOOL

Figure 1.8.3

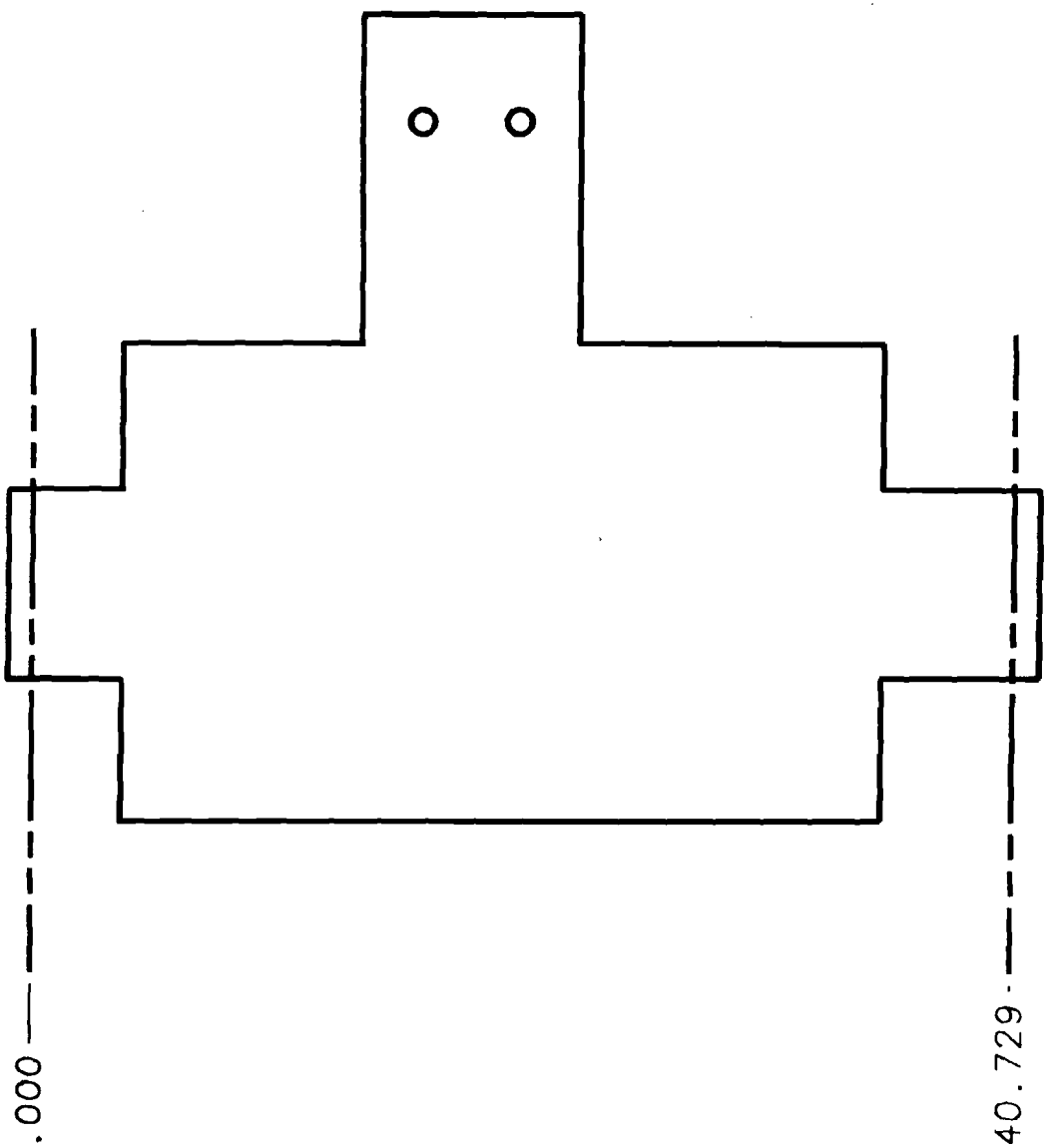

SPECIAL SPOOL

Figure 1.8.4

SCALE 1:8

1.9) Beam Detector Requirements

Ring Location	Pickup Polarity	Comments
48	H,V	Two standard Tevatron dipole detectors mounted in the Q5 spool piece @ 4.6 K
49	H,V	Two standard Tevatron dipole detectors mounted in the Q_1 spool piece @ 4.6 K
Upstream of Detector	H,V	Two shortened Tevatron dipole detectors mounted in the collision hall end of Q_4 @ 4.6 K
Downstream of Detector	H,V	Two shortened Tevatron dipole detectors mounted in the collision hall end of Q_4 @ 4.6 K
11	H,V	Two standard Tevatron dipole detectors mounted in the Q_1 spool piece @ 4.6 K
12	H,V	Two standard Tevatron dipole detectors mounted in the Q5 spool piece @ 4.6 K

The standard and shortened detectors are shown in the diagram. The third detector shown is a 10" long unit with four plates. The quaded detector will not be used as it requires more mechanical and electrical development.

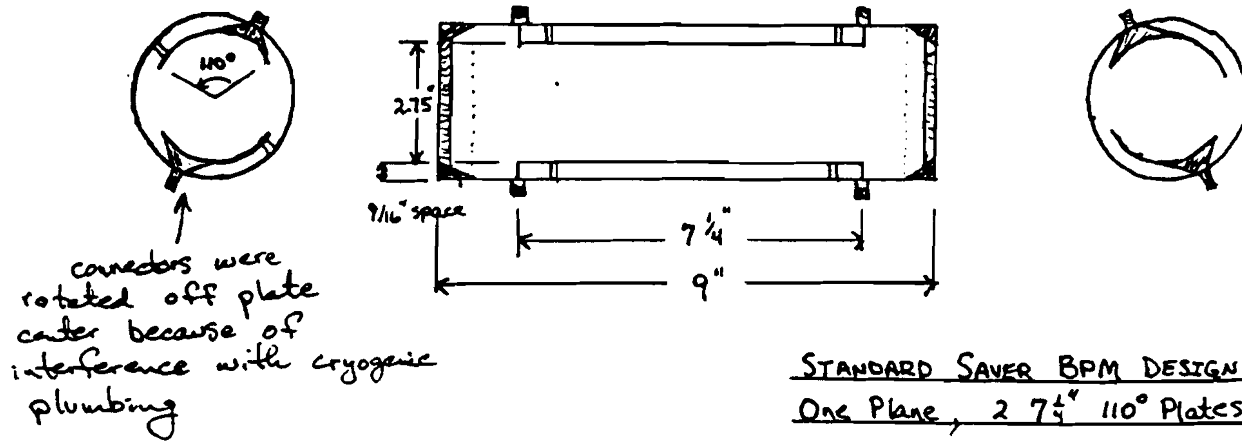

STANDARD SAVER BPM DESIGN
One Plane, 2 7 1/4" 110° Plates

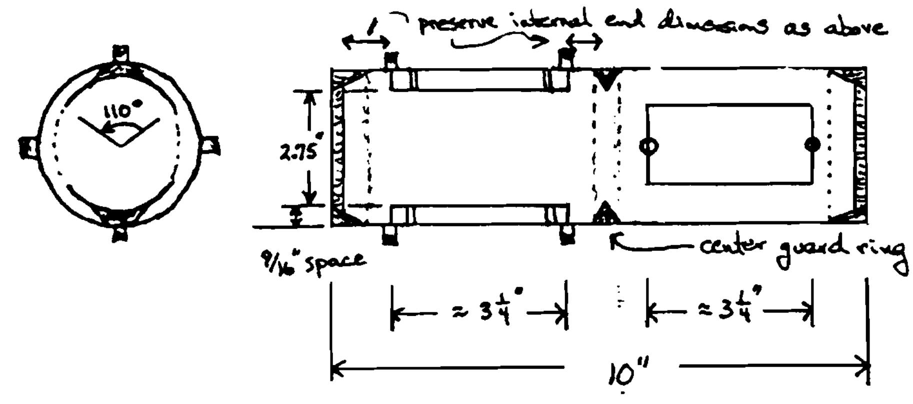

SHORT SAVER END-TO-END BPM DESIGN
Two Shortened Standard Pick-ups
Connected End to End for 2 Planes

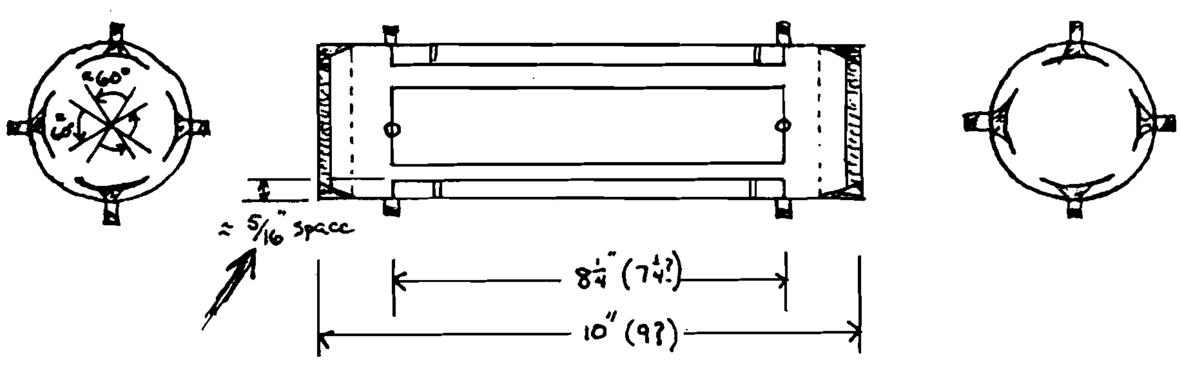

QUAD PLATE BPM DESIGN
Two Planes, 4 Full length
60° Plates

1.10) Fixed Target Requirements

The low β insertions need to be modified prior to Fixed Target operation of the accelerator.

DØ Modifications: Low β quadrupoles Q_1, Q_2, Q_3 and Q_4 and if present, the electrostatic separators are physically removed; trim quadrupoles T_6, T_7, T_8 and T_9 remain in place but are not energized; low β quadrupole Q_5 remains in place and operates at reduced current; a set of "82" and "99" arc matching quadrupoles - optically identical to the normal long straight sections C0, E0 and F0 but with the Tevatron bus currents reversed - are installed; and the Fixed Target extraction girder with its extraction components are installed. These modifications approximate the original DØ configuration of the Tevatron Fixed Target lattice.

BØ Modifications: Low β quadrupoles Q_1, Q_4 and trim quadrupoles T6, T_7, T_8, and T_9 remain and place but are not energized; low β quadrupoles Q_2, Q_3 and Q_5 are operated at reduced peak current and current rate. None of the low β components at this location need to be physically moved. The bus connection of the Q_2, Q_4 circuit needs to be separated at the feedcan to allow the independent operation of Q_2.

This changeover returns the Fixed Target extraction components to the DØ straight section and retains the original accelerator ramp rate by not using or operating the low β magnets at reduced fields. The required gradients for the low β quadrupoles powered during Fixed Target operation and the lattice functions of the original Fixed Target and modified lattice at the A0, BØ, DØ and E0 long straight sections are given in the Table 1.10.1. The maximum expected current rates are given below.

Fixed Target Parameters
150-1000 GeV in 20 sec
291.3 kG/m/kA
7.85 mH/meter

		Magnet (mH)	Circuit (mH)	Maximum Grad(kG/m)	Maximum Cur (A)	Ramp Rate (A/s)	Ramp Ind Volt (rV)
BØ	Q_2	26.32	52.64	482	1655	70.3	3.7
	Q_3	46.26	92.52	361	1239	52.7	4.9
	Q_5	10.78	21.56	423	1452	61.7	1.3
DØ	Q_5	10.78	21.56	218	748	31.8	0.7

Table 1.10.1 Fixed Target Low-Beta Gradients and Lattice Functions

****

FILE FT1 EXTRACTION LATTICE PRESENTLY IN USE

****

A48-1 GRADIENT Q1=368.89773 KG/M

POS		S(M)	NUX	NUY	BETAX(M)	BETAY(M)	XEQ(M)	YEQ(M)	ZEQ (M)	ALPHAX	ALPHAY	DXEQ	DYEQ
135	.A0	953.1750	2.89476	3.05461	105.21621	107.50143	2.41123	0.00000	2.8856	1.96228	-1.99286	-0.03084	0.00000
296	.B0	2000.2200	6.18013	6.23488	73.22077	72.46386	2.41789	0.00000	5.8672	-0.47395	0.47224	0.02061	0.00000
611	.D0	4094.7675	12.59581	12.75416	106.51418	105.51320	2.41703	0.00000	11.8256	1.97151	-1.95511	-0.03089	0.00000
766	.E0	5141.9650	15.88007	15.93568	72.14751	72.86369	2.42200	0.00000	14.8074	-0.46606	0.46240	0.02059	0.00000

MAXIMA --- BETX(609) = 244.81563 BETY(136) = 245.24295 XEQ(58) = 5.96543 YEQ(942) = 0.00000

****

File TCFT2B NEW LOW BETA LATTICE AT BØ
EXTRACTION LATTICE AT DØ CONTAINS BØ COLLINS' QUADS WITH REVERSED CURRENTS

****

BØ LOCATION			DØ LOCATION			GRADIENTS IN KG/M
Q_4	=	0.	Q_4	=	REMOVED	
Q_3	=	-360.874	Q_3	=	REMOVED	
Q_2	=	481.694	Q_2	=	REMOVED	
Q_1	=	0.	Q_1	=	REMOVED	
Q_5	=	423.028	Q_5	=	217.93	
T_6	=	0.	T_6	=	0.	
T_7	=	0.	T_7	=	0.	
T_8	=	0.	T_8	=	0.	
T_9	=	0.	T_9	=	0.	

POS		S(M)	NUX	NUY	BETAX(M)	BETAY(M)	XEQ(M)	YEQ(M)	ZEQ (M)	ALPHAX	ALPHAY	DXEQ	DYEQ
135	.A0	953.1750	2.90083	3.06054	105.90026	106.53481	2.68612	0.00000	2.8689	1.96470	-1.97053	-0.03243	0.00000
301	.B0	2000.2200	6.15829	6.24404	115.43804	115.10410	3.31993	0.00000	5.8552	-1.43313	1.42712	0.04887	0.00000
628	.D0	4094.7676	12.57013	12.75593	127.86570	129.32129	2.72396	0.00000	11.8187	2.60346	-2.62127	-0.04307	0.00000
789	.E0	5141.9652	15.87462	15.93099	73.07905	72.28702	2.17870	0.00000	14.7799	-0.47234	0.46452	0.01685	0.00000

MAXIMA --- BETX(626) = 310.67276 BETY(629) = 310.52157 XEQ(867) = 6.10802 YEQ(965) = 0.00000

****

2.0) Specifications

2.1) Quadrupole

The low-beta quadrupoles have two-shell cos theta geometry. They utilize a cold-iron flux return. The cryostat is based on that of the design of the SSC dipole and maintaining the coil at the nominal Tevatron ring temperature (~4.8 K).

2.1.1) Conductor

Alloy	NbTi[2]	NbTiTa[1]
Strand diameter (inches)	.0208 $^{+.0002}_{-.0000}$	.0208 $^{+.0002}_{-.0000}$
Number of strands	36	36
Strand twist pitch (twists/in.)	2	2
Strand twist is to be	left hand	left hand
Copper to superconductor ratio	1.5:1	1.5:1[3]
Number of filaments	612	612
Filament (spacing/diameter)	<.2	<.2
Filament diameter (μm)	13	13
Minimum filament spacing (μm)	>1.5	>1.5
J_c at 4.2K (4.6) & 5T - (A/mm^2)	3000 (2600)	3000 (2575)[5]
J_c at 4.2K and 8T - (A/mm^2)	1350	1350
J_c at 1.8K and 8T - (A/mm^2)	2560	3000
I_c at 4.2K and 6T - (A)	193	

Cross section:

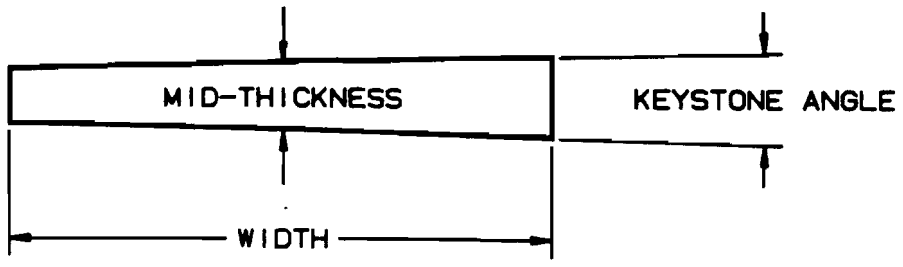

The cable specifications are as follows:

Cable Twist	
Length per twist (in.)	2.85 ± 3.2[4]
Cable average mid-thickness (in.)*	0.0353 ± .0006
Cable average width (in.)*	0.3850 ± .0005
Cable keystone (degrees)* "α"	1.06 ± .03
Cable twist is to be	right hand
Cable insulation scheme	1 single .001" thick, 3/8" wide Kapton film. 6.3 right-hand wraps/in. with 0.0001" 'β' stage (~ .003" buildup of insulation)

*RMS value as measured on the inline measuring machine at 5000 PSI.

Notes:

1. Reference Specification for NbTiTa Alloy Tevatron Specification HF-2 (7/15/86). Future upgrade of the quads.

2. Reference specification for Nb-46.5 w/o Ti Alloy Tevatron Specification ES 125781 (formerly referred to as HF-3).

3. Expect 1.47/1 ± .04.

4. Corresponds to 14.4 degrees.

5. 4.2 are our cable specs - 4.6 are operating specs.

Conductor Requirements

RAL 5/23/88

SAG 1/5/89 (Revised)

Thirty-one magnets (five each of Q_1, Q_2, Q_3, Q_4, Q_5 and six each of T_6) will require 104,907 ft of cable

---

a 5% allowance for ends, etc.
a 10% allowance for wasted coils
a 3.5% allowance for (cos 15^0) effect

gives a requirement of 4.51×10^6 ft of strand (36 strand cable)

12" billets of 27-13/16" length - IGC expects 6×10^5 ft/billet. If this is true then 8 billets are needed.

$$\frac{27\text{-}1/2}{24} \times \frac{12^2}{10^2} \times 220{,}000 \times \frac{268}{208}^{2} \rightarrow 602 \times 10^{3} \text{ ft}$$

scaling from Energy Saver to Low β

Alloy Needed to Fill Eight Billets

Billet #	Type	Use	Alloy Needed
1	binary	initial cabling + production	285
2	ternary	undertermined	300
3	binary	1/2 quad strand, 1/2 5-1 conductor	285
4	binary		285
5	binary		285
6	binary	production use	285
7	binary		285
8	binary		285
9	binary		285
10	binary		285
11	binary		285
12	binary	Contingency diameter to be	285
13	binary	held at 0.92" pending decision on final size	285
			3420# NbTi / 300 NbTiTa

Ordered to date:

Req of	4/28/88	941#	NbTi	not at TWCA yet
	1/13/88	580#	NbTi(?)	TWCA
		880	NbTi	shipped
		171	NbTi	TWCA
		2572		

Strand and Cable

IGC stranding

4 billets placed
4 more + 1 (5-1) requested
1 more billet needed - change order

Conductor Status Summary

Alloy (Cu clad Nb Rod)	Specifications	Quantity	Vendor	PO#	Scheduled Delivery	Quantity Arrived
	ES 126794	1,210 lbs.	Teledyne Wah Chang	934350	Delivered	310 lbs.
	ES 126794	1,185 lbs.	Teledyne Wah Chang	945020	Delivered	1,303 lbs.
	ES 126794	1,710 lbs.	Teledyne Wah Chang	950620	Delivered	1,711 lbs.
	HF-3	731 lbs.	Teledyne Wah Chang	922310	Delivered	731 lbs.
	HF-3	837 lbs.	Teledyne Wah Chang	922360	Delivered	837 lbs.
	ES 125786 Rev. C	1650 lbs.	Teledyne Wah Chang	962330	Delivered	1670 lbs.
	FS 125786 Rev. C	200 lbs.	Teledyne Wah Chang	975040	Delivered	212 lbs.
Strand Billet Number						
#88LBQ001/S.O.#5263(B-0001)	ES 261628 Rev. C	Min. yield 620,000 ft	IGC	934480	Complete 546,361 ft	
#88TER001	ES 261628 Rev. C	Min. yield 620,000 ft	IGC	934480	Processing to 919Dia	
#88LBQ002(5-1 mat.)(B-0075)	ES 261628 Rev. C	Expect qty. 36,500 ft	IGC	934480	Complete 34,819 Ft.	
(LBQ strand) (B-0075)	ES 261628 Rev. C	Min. yield 230,000 ft	IGC	934480	Complete 308,288 Ft.	
#88LBQ003 (B-0076)	ES 261628 Rev. C	Min. yield 620,000 ft	IGC	934480	Complete 631,880 Ft.	
#88LBQ004 so.#5369(B0344)	ES 261628 Rev. C	Min. Yield 620,000 ft	IGC	958220	Sch. 12/15 606,236 ft	
#88LBQ005 (B0345)	ES 261628 Rev. C	Min. Yield 620,000 ft	IGC	958220	Sch. 12/15 485,980 ft	
#88LBQ006 (B0349)	ES 261628 Rev. C	Min. Yield 620,000 ft	IGC	958220	Sch. 12/15 449,019 ft	
#88LBQ007 (B0350)	ES 261628 Rev. C	Min. Yield 620,000 ft	IGC	958220	Complete 631,953 ft	
#88LBQ008 (B0351)	ES 261628 Rev. C	Min. Yield 620,000 ft	IGC	958220	Sch. 12/15 575,738 ft	
#88LBQ009 (B0352)	ES 261628 Rev. C	Min. Yield 620,000 ft	IGC	958220	Complete 632,467 ft	
#88LBQ010	ES 261628 Rev. C	Min. Yield 620,000 ft	IGC	958220	Anticipated 3/05/90	
#88LBQ011	ES 261628 Rev. C	Min. Yield 620,000 ft	IGC	958220	Anticipated 4/27/89	
#88LBQ012	ES 261628 Rev. C	Min. Yield 620,000 ft	IGC	958220	Anticipated 4/27/89	

2.1.2) Coil

Inner layer Figure 2.1.2-1 (Note 1) (Coil Detail)

Number of turns per pole	19
Number of wedges	1
Inner diameter w/o cable insulation (inches)	3.008
Outer diameter w/o cable insulation (inches)	3.778
Cable length/mass	

Outer layer

Number of turns per pole	28
Number of wedges	1
Inner diameter w/o cable insulation	3.814
Outer diameter w/o cable insulation	4.584
Cable length/mass	

Insulation

Coil insulation material	Kapton
Coil insulation thickness	.001" x 2 layers butt lap + .001" x 1 layer butt lap
Parting plane insulation material	Kapton
Parting plane insulation thickness	2 layers of .005" thick
Ground insulation material	Kapton
Ground insulation thickness	

See figure 2.1.2-1 (Coil Insulation Detail)

Stored energy (4.85 kA)	Q_1, Q_5	127 kJ
	Q_2, Q_4	309 kJ
	Q_3	544 kJ
	T_6	56 kJ
Inductance (calculated)	Q_1, Q_5	10.76 mH
$\frac{L}{l} \cong 7.85 \times 10^{-3} \frac{\text{henries}}{\text{meter}}$	Q_2, Q_4	26.32 mH
	Q_3	46.26 mH
	T_6	4.78 mH

Hipot requirements <5μA @ 5kV (Note 2)

Quench protection

Notes:

1. Correct cross section OPTI 714 coil performance figure 2.1.2-2, radial fringe field figure 2.1.2-3, performance table 2.1.2-1, coil end design figure 2.1.2-4.

2. Same as Energy Saver.

Table 2.1.2-1*

Magnetic Field Harmonics

as Predicted by POISSON Calculations

Low 'ρ' Quadrupole Design #715

As Computed With CAROLP (Wedge) Units $1/IN^{N-1}$

2	6	10	14	18	22	26	30	34
10^4	0.46	-0.15	1.20	-0.53	0.0014	0.012	-0.0007	-0.0002

As Computed With MAGFLD (Rect.) Units $1/IN^{N-1}$

10^4	+0.16	-0.24	1.22	-0.56	0.0020	0.013	-0.0008	-0.0002

As Computed with ALAN's POISSON Calculations

Amp Fac. = 0.9949 Amps Fe Thickness 2.650"

17 cm ID - 30.48 OD

* Preliminary - harmonics with final geometry have not yet been calculated. See A. Riddiford.

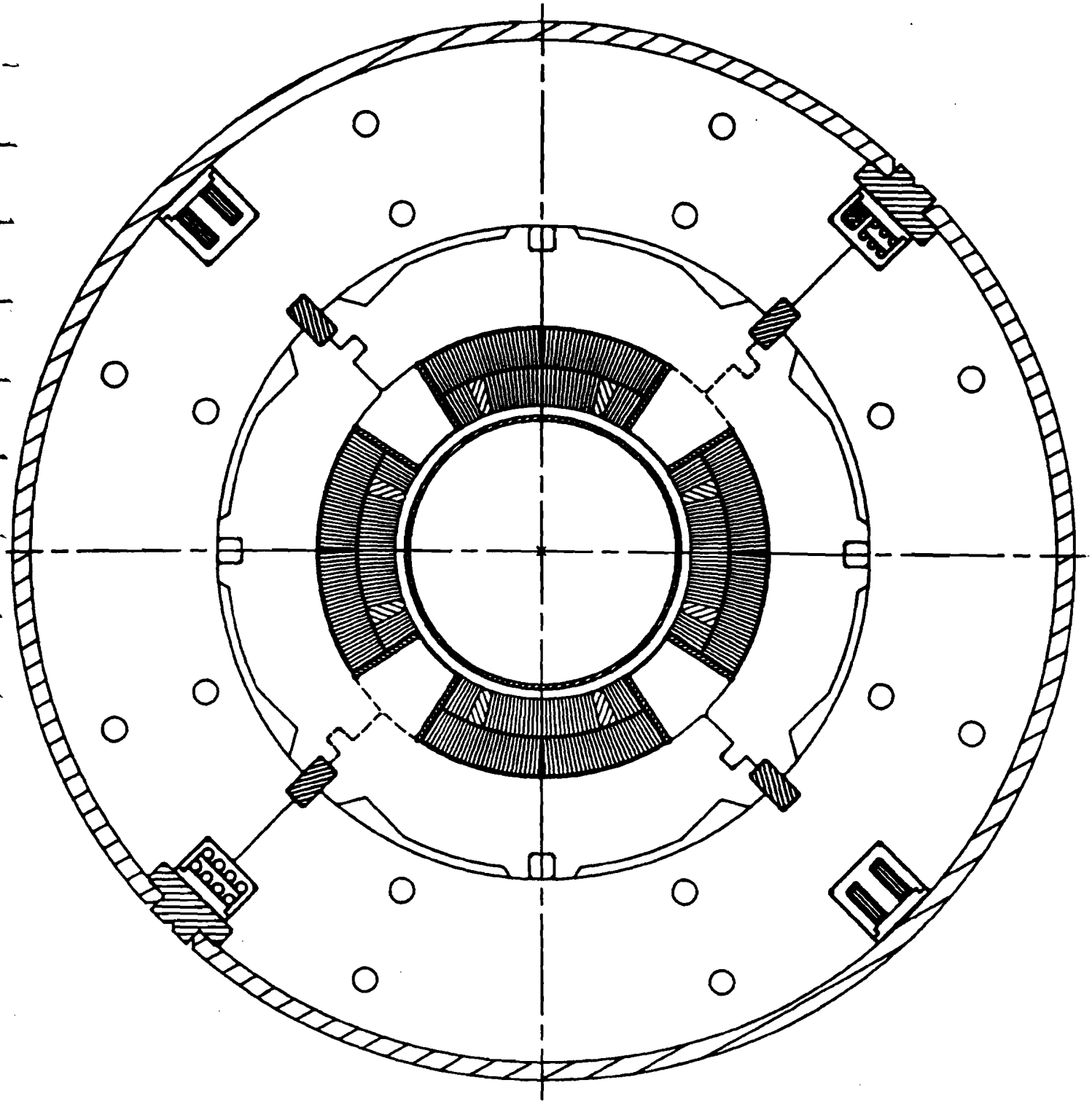

Figure 2.1.2-1

Cold Iron 7.6 cm Quad

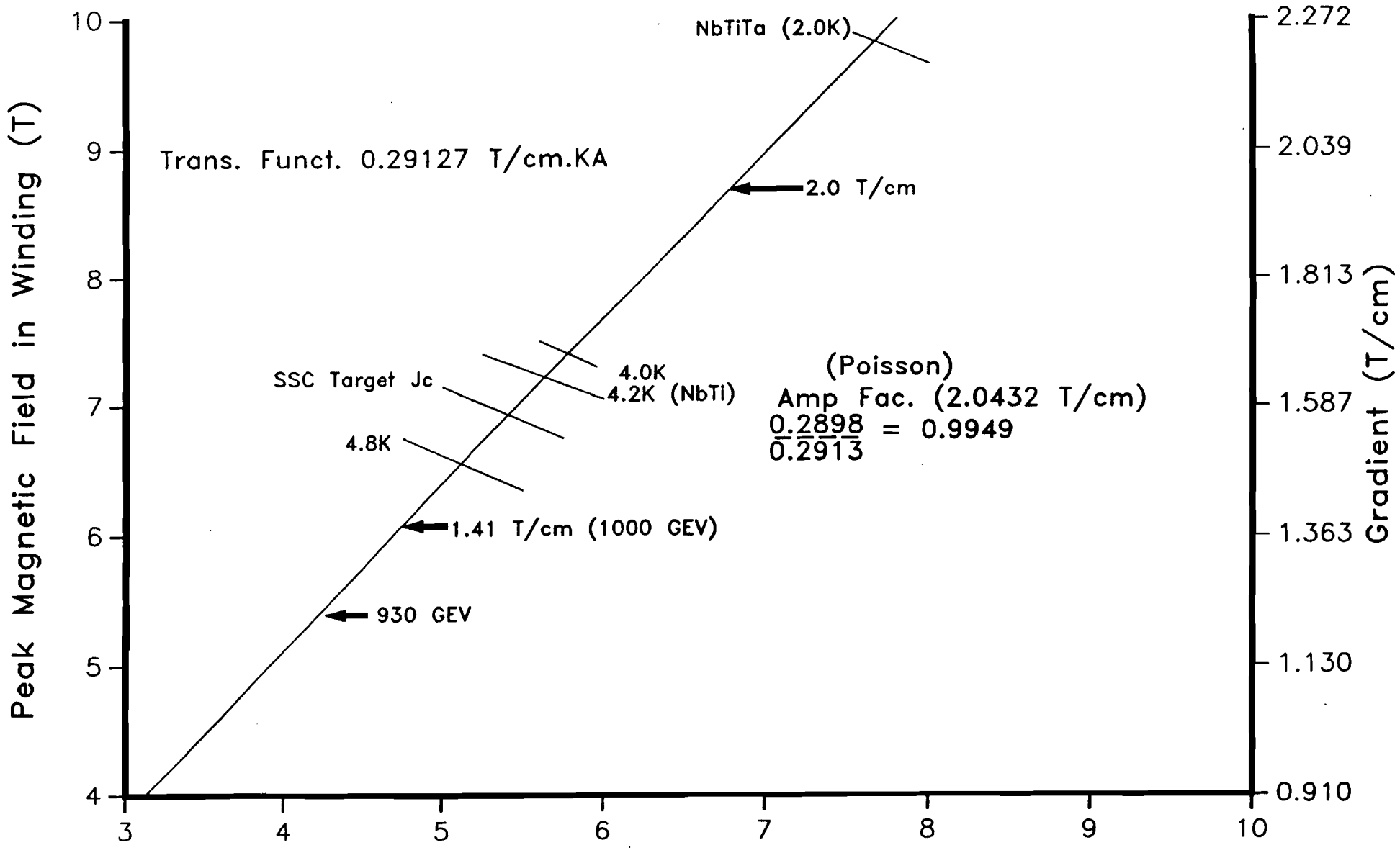

Figure 2.1.2–2

Figure 2.1.2-3

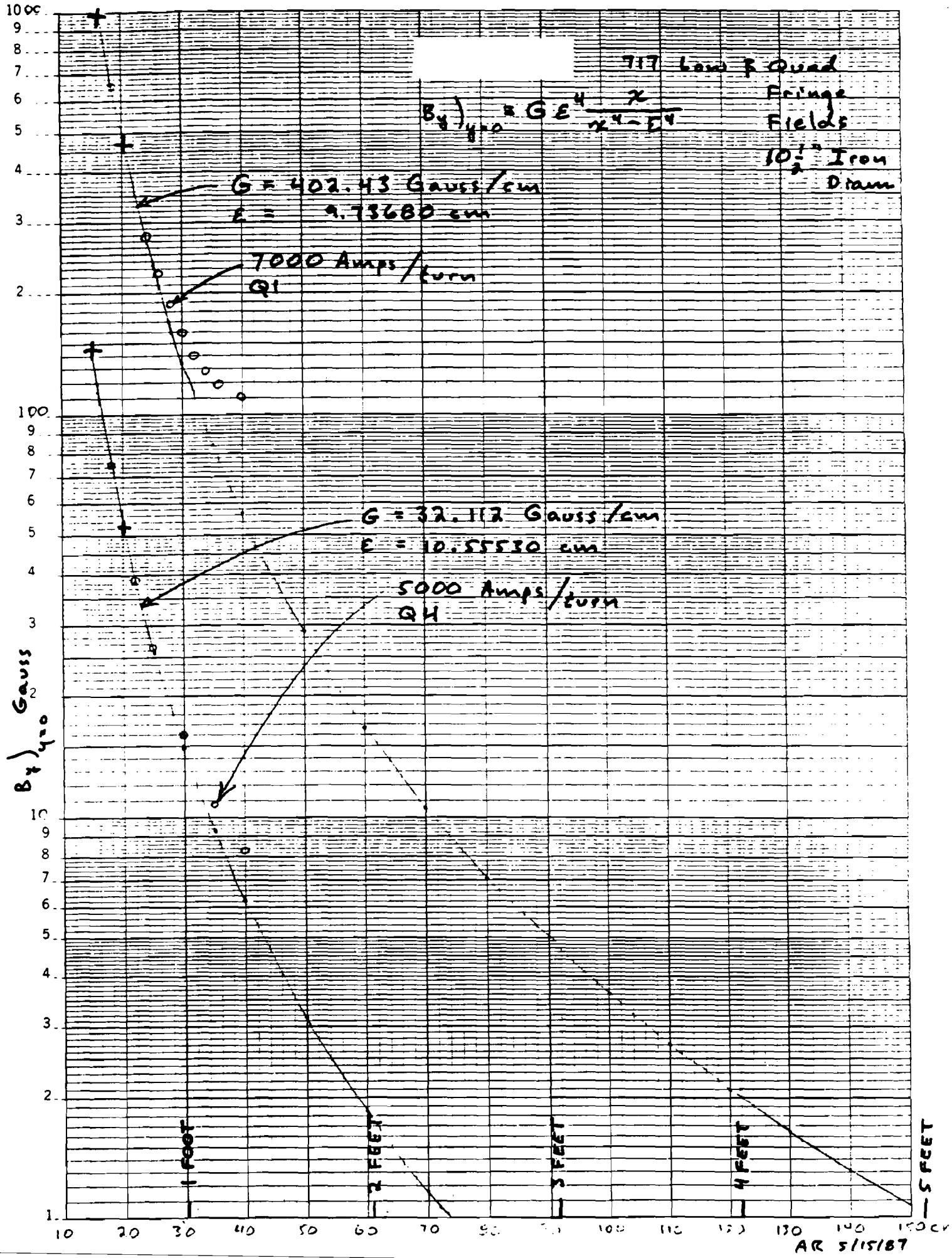
717 Long Quad
Fringe
Fields
10½" Iron
Diam
$B_y)_{y=0} = G\varepsilon^4 \frac{x}{x^4-\varepsilon^4}$
G = 402.43 Gauss/cm
ε = 9.73680 cm
7000 Amps/turn
Q1
G = 32.112 Gauss/cm
ε = 10.55530 cm
5000 Amps/turn
QH
$B_y)_{y=0}$ Gauss
1 FOOT
2 FEET
3 FEET
4 FEET
5 FEET
AR 5/15/87

REV.	DESCRIPTION	DRAWN & APPROVED
C	ADDED COLLARED COIL LENGTH Q	H. FULTON 3 NOV 89

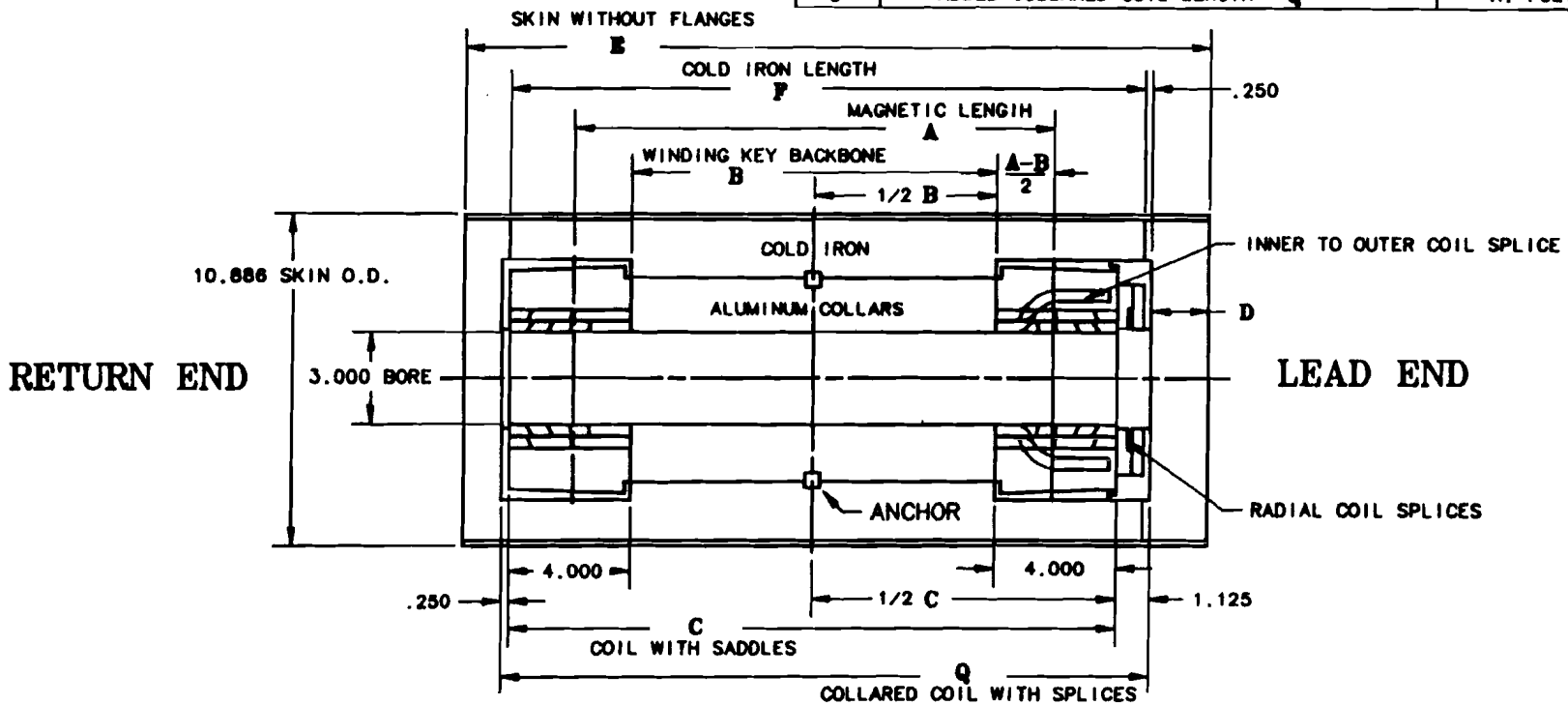

QUAD	TYPE	A MAGNETIC LENGTH	B COLLAR LENGTH	C COIL LENGTH	D SKIN LOCATION	E SKIN LENGTH	F COLD IRON LENGTH	Q COLLARED COIL LENGTH
N54XXF	Q1 & Q5	55.19"	50.312"	58.312"	1.923"	62.938"	59.19"	59.687"
N13XXF	Q2	132.00"	127.122"	135.122"	2.582"	142.536"	136.00"	136.497"
N23XXF	Q3	232.00"	227.122"	235.122"	2.582"	242.536"	236.00"	236.497"
N13XXF	Q4	132.00"	127.122'	135.122"	2.582"	140.268"	136.00"	136.497"
SPECIAL	T6	23.88"	19.000"	27.000"	0.000"	28.375"	27.88"	28.375"

FNTS05::USR$ROOT5:[FULTON.LBQ2SHELL]217812C.DWG

SDRC IDEAS GEODRAW LEVEL 4.1

TOLERANCES UNLESS OTHERWISE SPECIFIED: 2 PLACES ± ; 3 PLACES ± ; ANGLES ±

DIMENSIONS AND TOLERANCES PER ANSI Y14.5 STANDARDS. BREAK ALL SHARP EDGES .015. SURFACE TEXTURE 125

ORIGINATOR: J. CARSON

DRAWN: H.FULTON 15 MAY 89

CHECKED

APPROVED

USED ON

MATERIAL

FERMI NATIONAL ACCELERATOR LAB
U.S. DEPARTMENT OF ENERGY

TITLE: LBQ 716 COLDMASS (2 SHELL COIL) DESIGN LENGTHS

SCALE: DONOT

DRAWING NUMBER: 0102-MB-217812

SHEET

REV. C

Figure 2.1.2-4

REV.	DESCRIPTION	DRAWN & APPROVED
A	WINDING KEY LENGTH OF Q3 OUTER COIL ONLY INCREASED BY .052 EACH END (.104 TOTAL)	H. FULTON 31 OCT 89

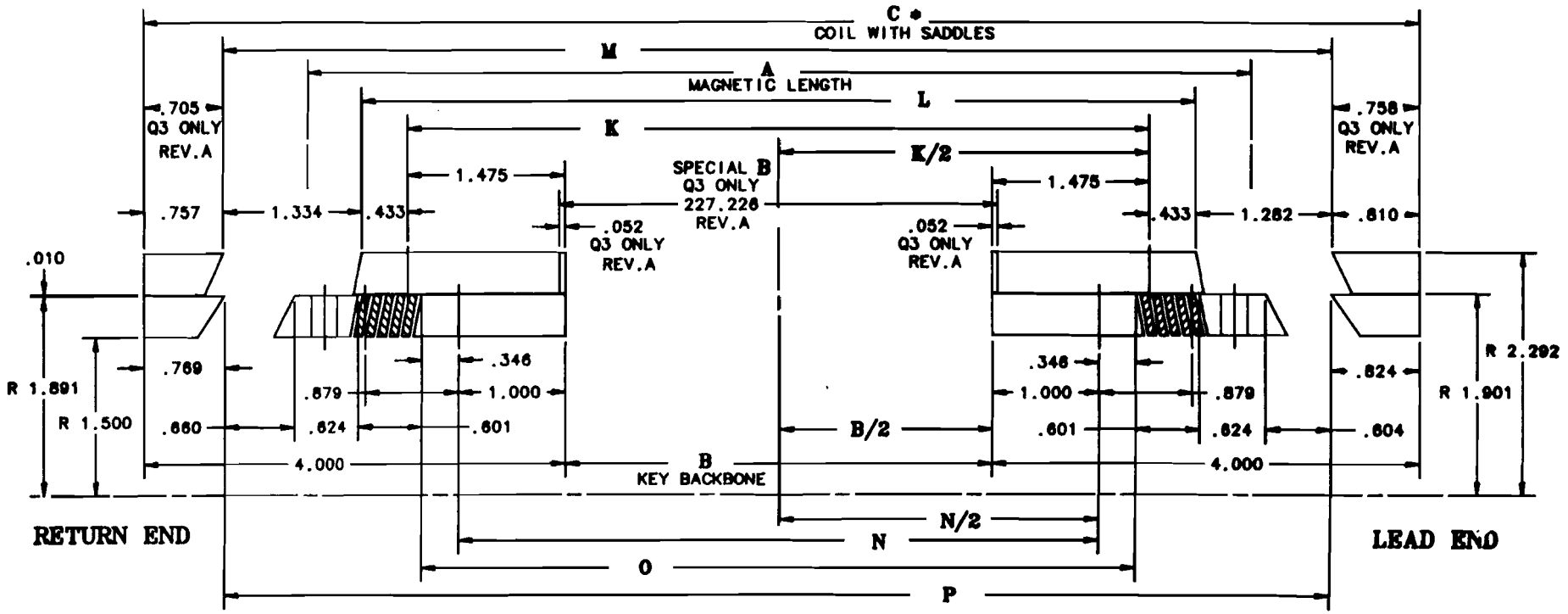

QUAD	TYPE	A MAGNETIC LENGTH	B KEY BACKBONE	C * COIL LENGTH	K OUTER STRAIGHT LENGTH	L OUTER KEY WIRE TO WIRE	M OUTER SADDLE WIRE TO WIRE	N INNER STRAIGHT LENGTH	O INNER KEY WIRE TO WIRE	P INNER SADDLE WIRE TO WIRE
N84300F	Q1&Q5	55.19"	50.312"	58.312"	53.262"	54.128"	56.744"	52.312"	53.004"	56.719"
N13300F	Q2	132.00"	127.122"	135.122"	130.072"	130.938"	133.554"	129.122"	129.814"	133.529"
N23300F	Q3	232.00"	227.122"	235.122"	230.176" REV.A	231.042" REV.A	233.658" REV.A	229.122"	229.814"	233.529"
N13300F	Q4	132.00"	127.122"	135.122"	130.072"	130.938"	133.554"	129.122"	129.814"	133.529"
SPECIAL	T6	23.88"	19.000"	27.000"	21.950"	22.816"	25.432"	21.000"	21.692"	25.407"

* OVER ALL LENGTH (C) FOR INNER AND OUTER COILS MUST BE HELD WITHIN ±.020.

FNTS05::USR$ROOT:[FULTON.LBQ2SHELL]217868A.DWG

SDRC IDEAS GEODRAW LEVEL 4.1

TOLERANCES UNLESS OTHERWISE SPECIFIED: ±2 PLACES, ±3 PLACES ±.010, ANGLES ±
DIMENSIONS AND TOLERANCES PER ANSI Y14.5 STANDARDS. BREAK ALL SHARP EDGES .015.
SURFACE TEXTURE 125

DRAWN J. CARSON
CHECKED S. WALKER 7/29/89
APPROVED H.FULTON 14 AUG 89
USED ON
MATERIAL

FERMI NATIONAL ACCELERATOR LAB
U.S. DEPARTMENT OF ENERGY

TITLE
LBQ 716 2 SHELL
COIL DESIGN LENGTHS

SCALE
DRAWING NUMBER 0102-MB-217868
SHEET
REV. A

Figure 2.1.2-5

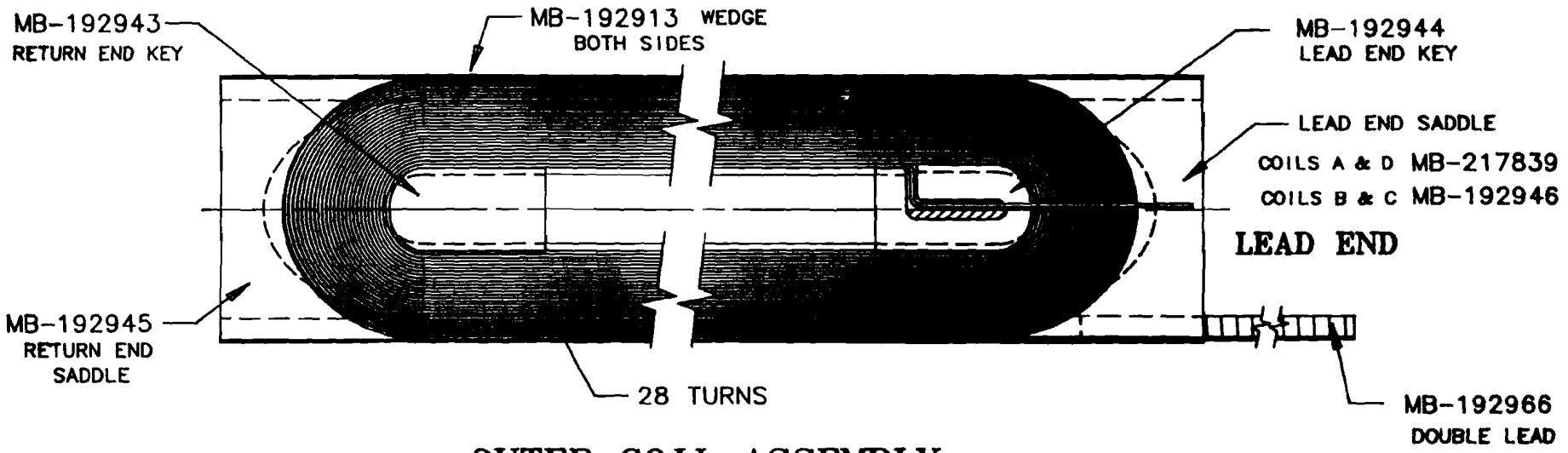

OUTER COIL ASSEMBLY

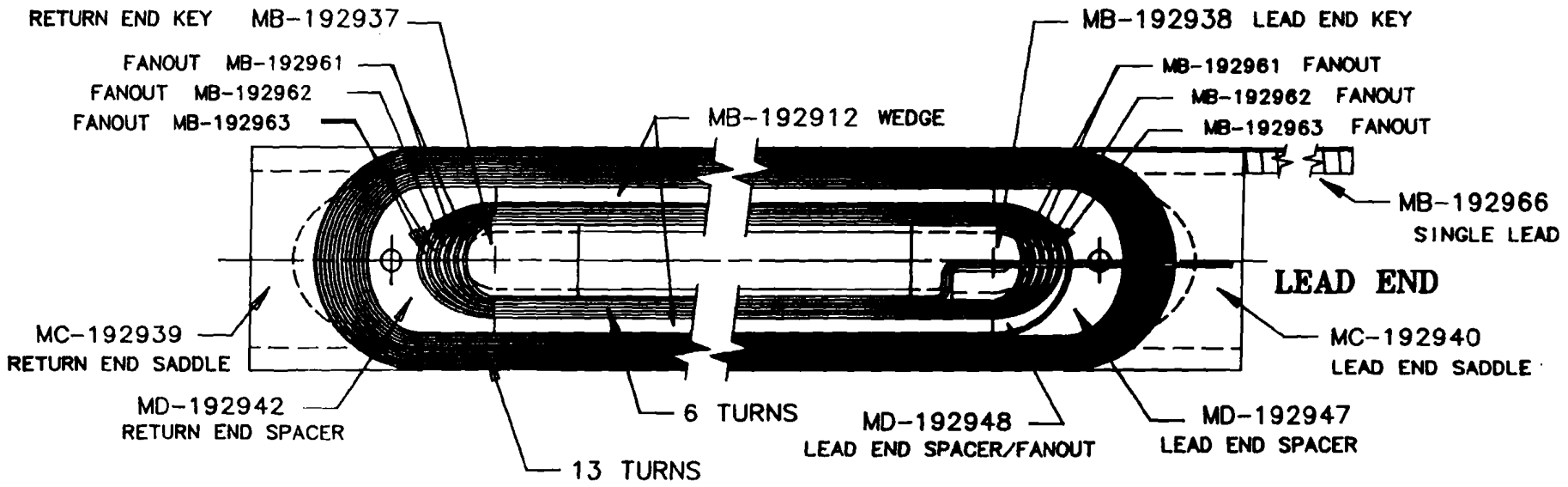

INNER COIL ASSEMBLY

Figure 2.1.2-6

2.1.3) Coil Support Collar

Material: Aluminum Alloy
Lamination Thickness: 2024 - T3
(16 gauge) .0598

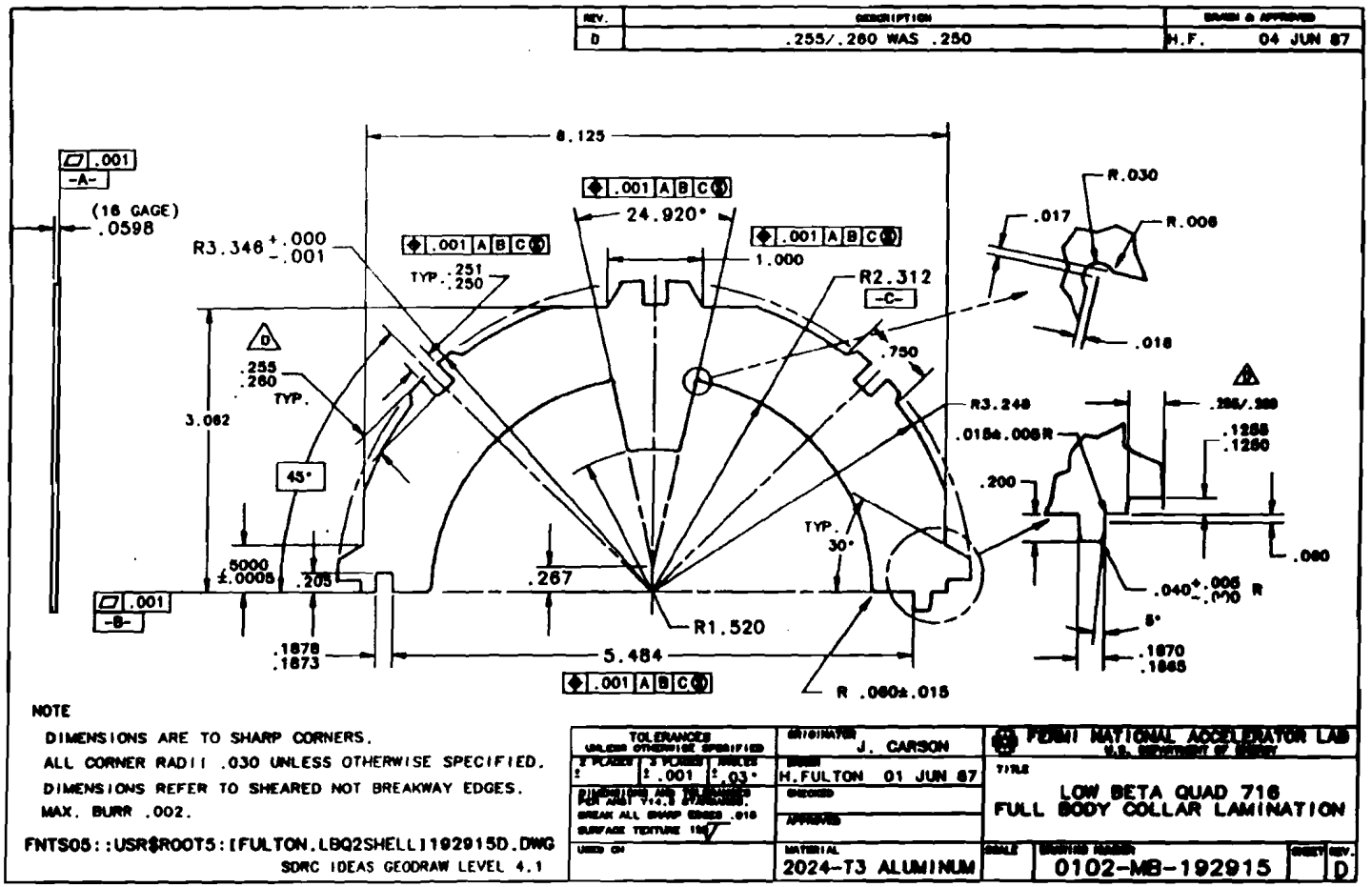

2.1.4) Yoke (Figures 2.1.2-1 and 2.1.4-1)

Material	Very low carbon high quality magnetic steel
Inner diameter	17.0 cm (6.692")
Outer diameter	26.7 cm (10.5 inches) Note 1
Lamination thickness	(16 gauge) .0598"
Weight of iron	
Q_1	798 lb
Q_2	1,936 lb
Q_3	3,309 lb
Q_4	1,936 lb
Q_5	798 lb
T_6	376 lb

Lamination density requirements
.284#/in^3

<u>End Iron Cross Section</u>

5" outer radius x 3.940" inner radius
Area = 78.540-48.769 = 29.771 in^2
Ends volume = 29.771 x 10.25 (ends length) = 305.153 in^3
Wt. = 305.153 x .284 = 86.663 lb

<u>Magnet Iron Cross Section</u>

5.25" outer radius x 3.346" inner radius
Area = 86.590-35.172 = 51.418 in^2

Main iron volume cu area

Magnetic Length	Main Iron Length		Cross Section Area		Volume in^3
55.19"	50.31"	x	51.418	=	2,587
132.0"	127.12"	x	51.418	=	6,536
232.0"	227.12"	x	51.418	=	11,678
23.88"	19.00"	x	51.418	=	977

			Main Length Wt.		End Wt.		Total Wt.
55.19"	2,587 x .284	=	735#	+	87#	=	822#
132.0"	6,536 x .284	=	1,856#	+	87#	=	1,943#
232.0"	11,678 x .284	=	3,317#	+	87#	=	3,404#
23.88"	977 x .284	=	277	+	87#	=	364#

Note:

1. Same as SSC dipole.

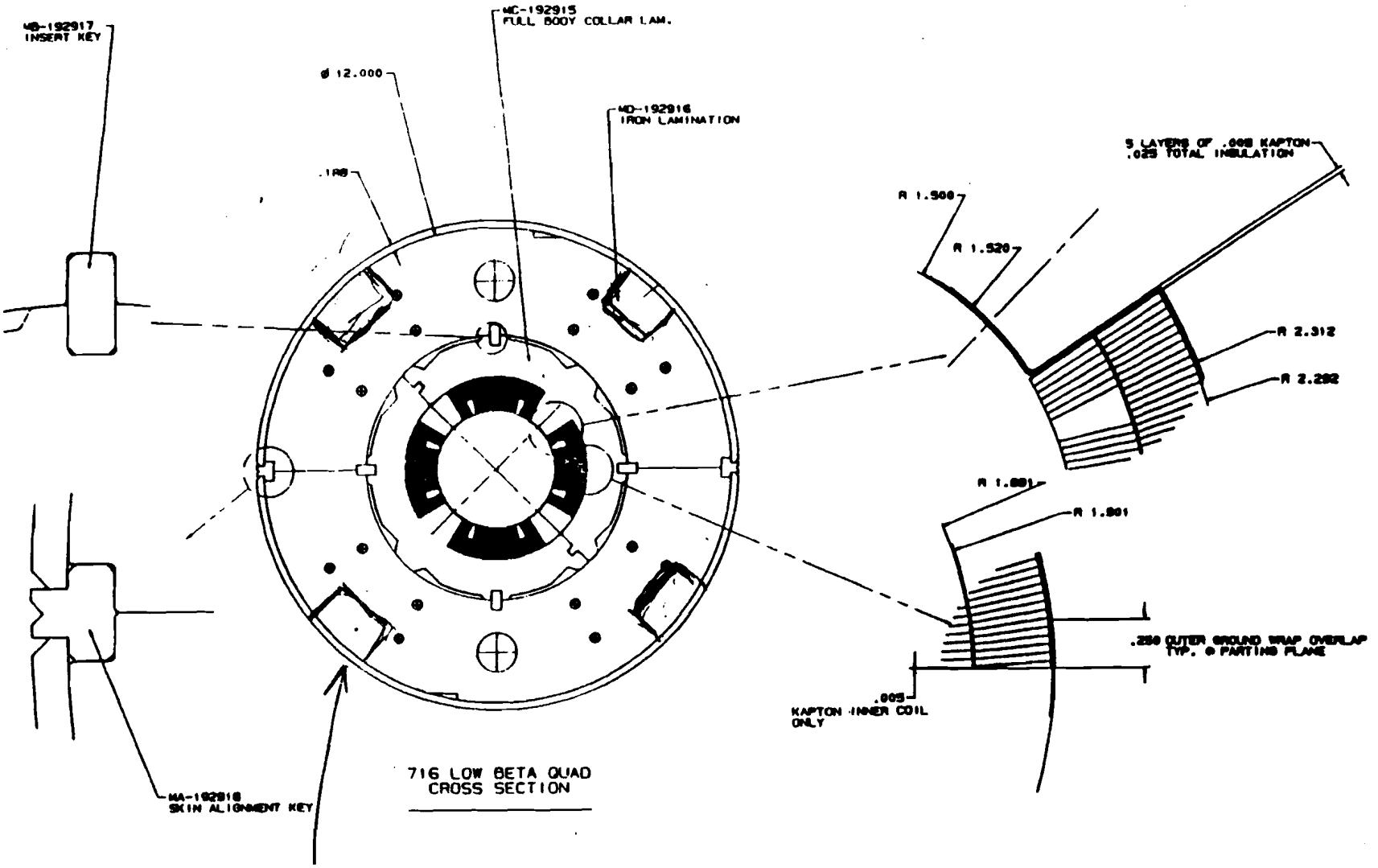

minimum channel 1/2" x 1/2"

Figure 2.1.4-1

Yoke Lamination Detail

2.1.5) Cold Mass Containment

Material	304 Stainless Steel
Thickness of 1Ø skin	.188 ± .001"
Weight of cold mass	
Q_1	1200 lb.
Q_2	2760 lb.
Q_3	4760 lb.
Q_4	2760 lb.
Q_5	1200 lb.
T_6	500 lb.

Parameter	Flow Environment Circuit	Circuit
Mass flow rate	2.5 g/s minimum	30 g/s
Allowable Δp across magnet		
Limiting Criterion	2psid @ 10 g/s Flow, 300K, 1 ATA	.005 psid at 30 g/s, 4.7K
Pressure		
Cooldown	4 ATA	3 ATA
Steady State	3 ATA	2 ATA
Quench	20 ATA	20 ATA
Inventory of Magnet	$\leq$ 10 liters/magnet	Not Important

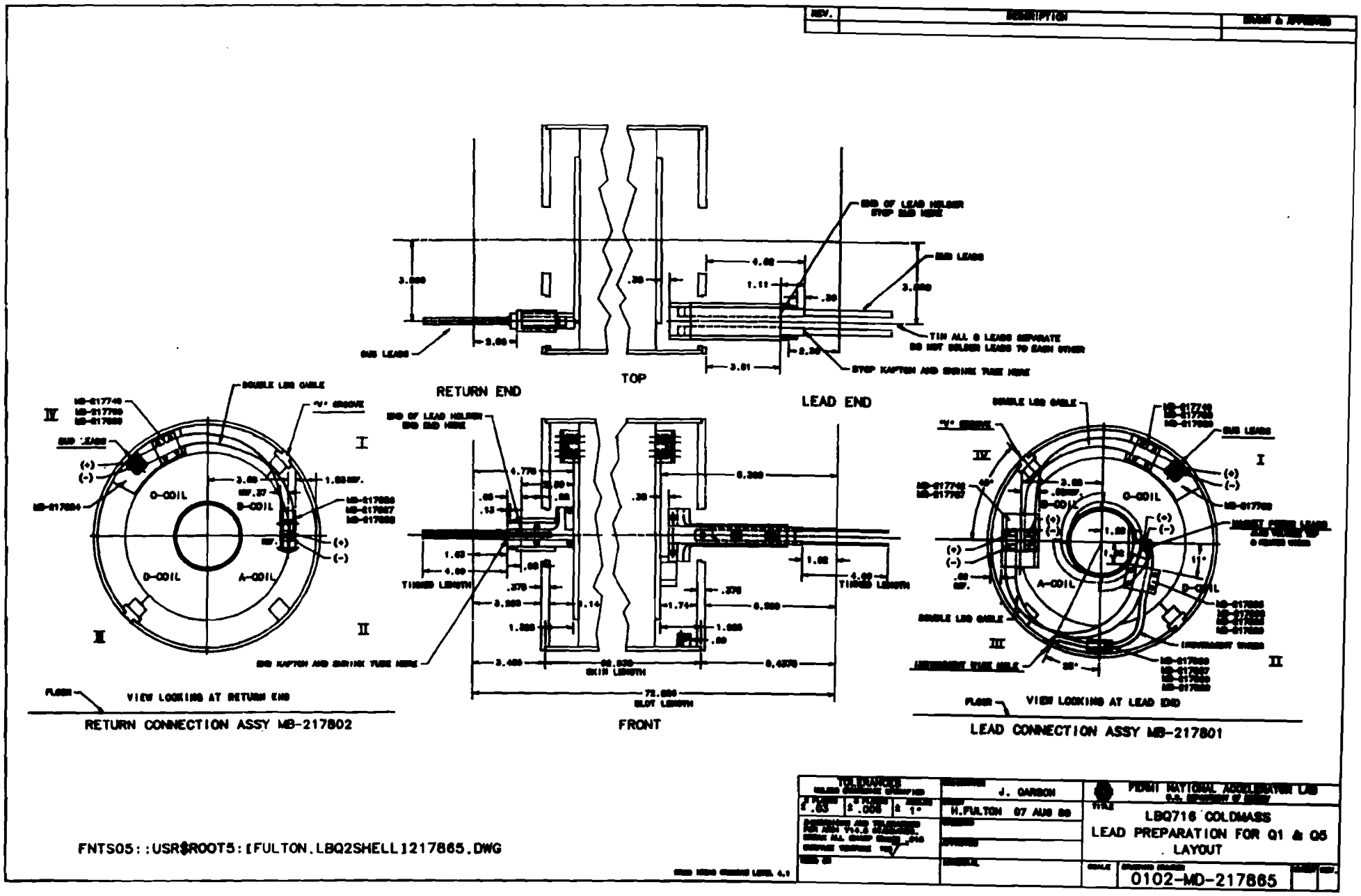
TOP
RETURN END
LEAD END
FRONT
RETURN CONNECTION ASSY MB-217802
LEAD CONNECTION ASSY MB-217801
VIEW LOOKING AT RETURN END
VIEW LOOKING AT LEAD END
LBQ716 COLDMASS
LEAD PREPARATION FOR Q1 & Q5
LAYOUT
0102-MD-217865
J. GARSON
H.FULTON 07 AUG 89
FNTS05::USR$ROOT5:[FULTON.LBQ2SHELL]217865.DWG

Figure 2.1.5-1

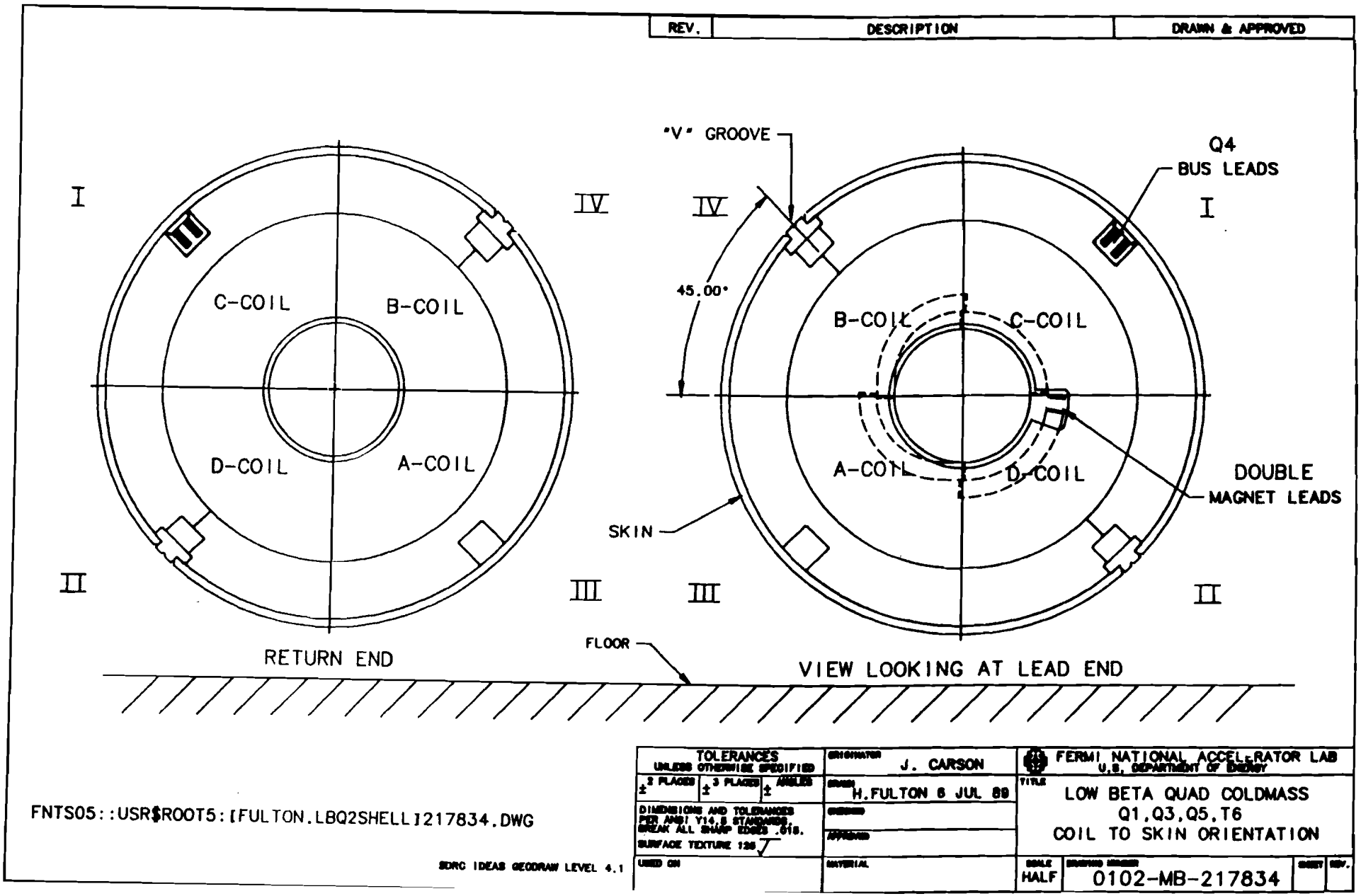
REV.
DESCRIPTION
DRAWN & APPROVED
I
IV
II
III
C-COIL
B-COIL
D-COIL
A-COIL
RETURN END
"V" GROOVE
45.00°
Q4
BUS LEADS
B-COIL
C-COIL
A-COIL
D-COIL
DOUBLE
MAGNET LEADS
SKIN
FLOOR
VIEW LOOKING AT LEAD END
FNTS05::USR$ROOT5:[FULTON.LBQ2SHELL]217834.DWG
SDRC IDEAS GEODRAW LEVEL 4.1
TOLERANCES
UNLESS OTHERWISE SPECIFIED
± 2 PLACES
± 3 PLACES
± ANGLES
DIMENSIONS AND TOLERANCES PER ANSI Y14.5 STANDARDS.
BREAK ALL SHARP EDGES .015.
SURFACE TEXTURE 125
USED ON
ORIGINATOR
J. CARSON
DRAWN
H.FULTON 6 JUL 89
CHECKED
APPROVED
MATERIAL
FERMI NATIONAL ACCELERATOR LAB
U.S. DEPARTMENT OF ENERGY
TITLE
LOW BETA QUAD COLDMASS
Q1,Q3,Q5,T6
COIL TO SKIN ORIENTATION
SCALE
HALF
DRAWING NUMBER
0102-MB-217834
SHEET
REV.

Figure 2.1.5-2

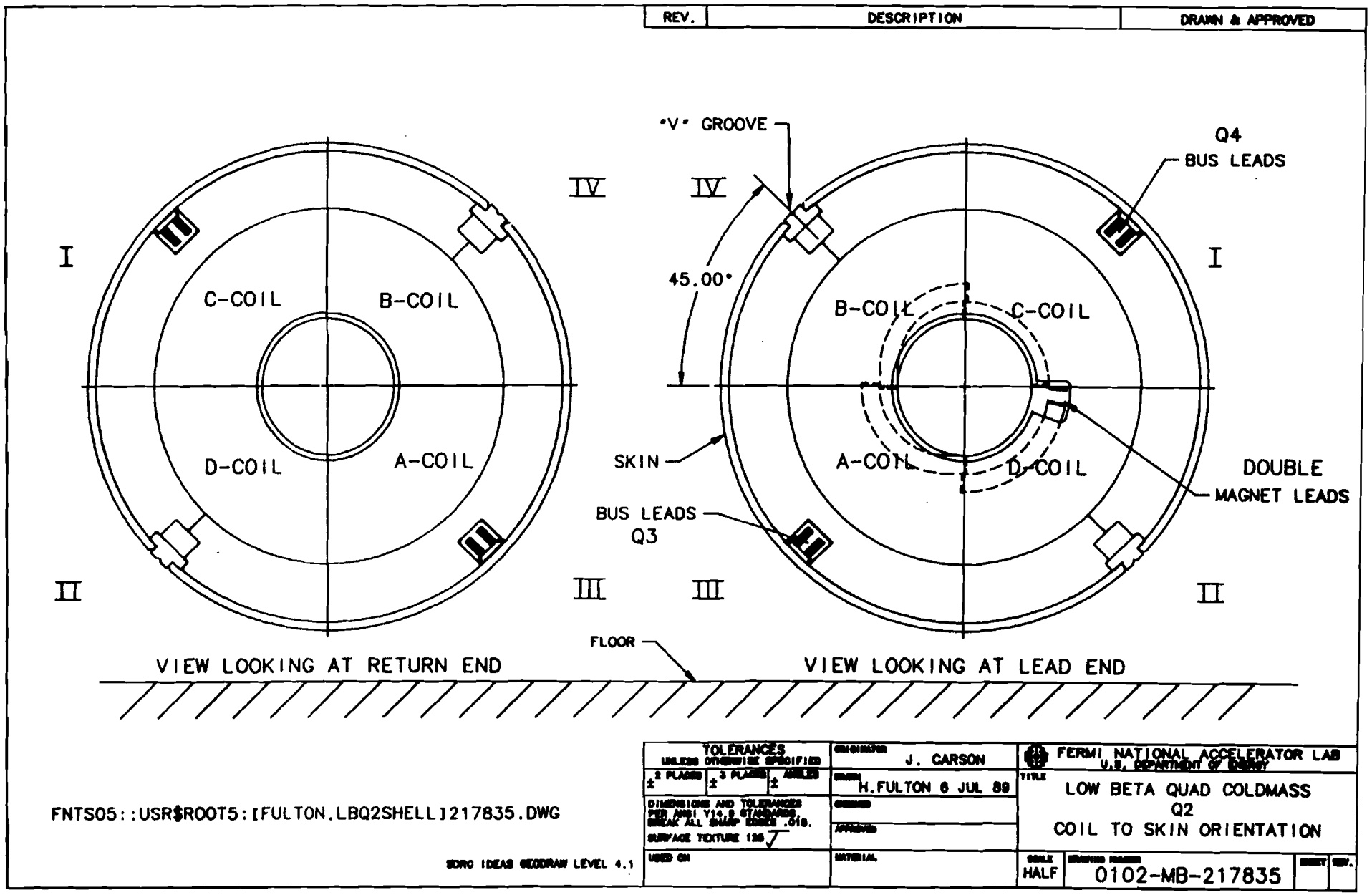
REV.
DESCRIPTION
DRAWN & APPROVED
"V" GROOVE
Q4
BUS LEADS
IV
IV
I
I
45.00°
C-COIL
B-COIL
B-COIL
C-COIL
D-COIL
A-COIL
A-COIL
D-COIL
SKIN
DOUBLE
MAGNET LEADS
BUS LEADS
Q3
II
III
III
II
FLOOR
VIEW LOOKING AT RETURN END
VIEW LOOKING AT LEAD END
FNTS05::USR$ROOT5:[FULTON.LBQ2SHELL]217835.DWG
SDRC IDEAS GEODRAW LEVEL 4.1
TOLERANCES
UNLESS OTHERWISE SPECIFIED
J. CARSON
H.FULTON 6 JUL 89
FERMI NATIONAL ACCELERATOR LAB
U.S. DEPARTMENT OF ENERGY
LOW BETA QUAD COLDMASS
Q2
COIL TO SKIN ORIENTATION
HALF
0102-MB-217835

Figure 2.1.5-3

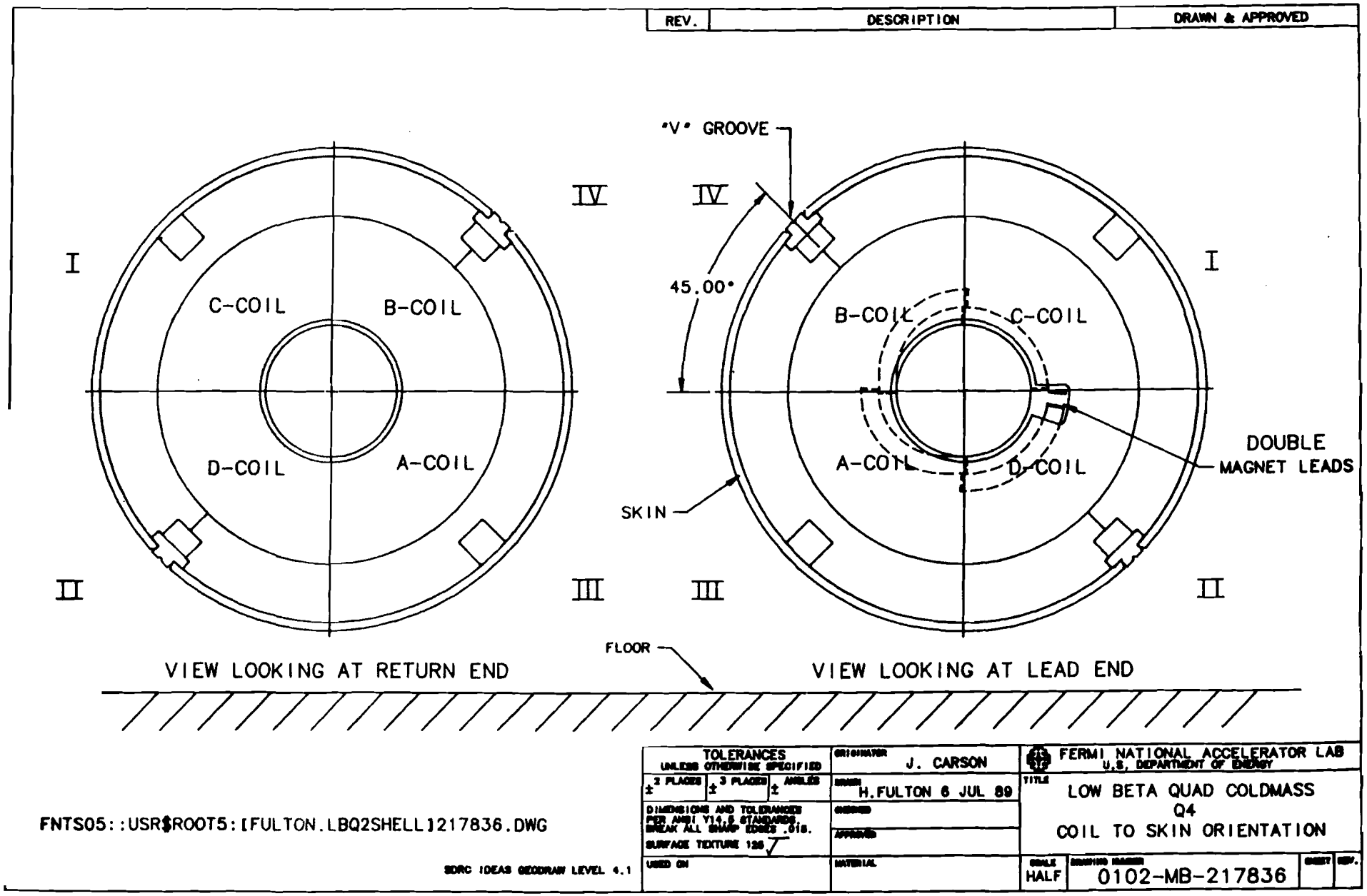
REV.
DESCRIPTION
DRAWN & APPROVED
"V" GROOVE
45.00°
I
II
III
IV
C-COIL
B-COIL
D-COIL
A-COIL
SKIN
DOUBLE
MAGNET LEADS
FLOOR
VIEW LOOKING AT RETURN END
VIEW LOOKING AT LEAD END
TOLERANCES
UNLESS OTHERWISE SPECIFIED
± 2 PLACES
± 3 PLACES
± ANGLES
DIMENSIONS AND TOLERANCES PER ANSI Y14.5 STANDARDS
BREAK ALL SHARP EDGES .015.
SURFACE TEXTURE 125
USED ON
ORIGINATOR
J. CARSON
DRAWN
H.FULTON 6 JUL 89
CHECKED
APPROVED
MATERIAL
FERMI NATIONAL ACCELERATOR LAB
U.S. DEPARTMENT OF ENERGY
TITLE
LOW BETA QUAD COLDMASS
Q4
COIL TO SKIN ORIENTATION
SCALE
HALF
DRAWING NUMBER
0102-MB-217836
SHEET
REV.
FNTS05::USR$ROOT5:[FULTON.LBQ2SHELL]217836.DWG
SDRC IDEAS GEODRAW LEVEL 4.1

Figure 2.1.5-4

2.1.6) Beam Tube

The Tevatron Beam Pipe

Extracted from "DØ Beam Pipe" DØ Note 462,
Hans Jostlein, October 15, 1986

The Tevatron beam pipe passes through the plug iron, the central hole EC and the inner tracking chambers. Fig. 2.1.6-1 shows an overview of the arrangement at DØ. Fig 2.1.6-2 shows more details of the component layout near Q_4.

Like the main ring beam pipe, the Tevatron pipe has a pair of vacuum gate valves at each end, near the low-beta quadrupoles. This allows the Tevatron vacuum and the experiment's beam pipe vacuum to be maintained when the experiment is disconnected and rolls out, so that good beam vacuum in the interaction area can be maintained with little or no baking of the pipe.

The lengths of pipe from the low-beta quads to the inner ends of the forward drift chambers (FDT's) are made from stainless steel, and contain a number of devices. Starting from the low-beta quads, there will be on each side an all-metal beam valve, a bellows section (to be removed when the experiment is disconnected) and second all metal beam valve.

The valves must fit into a 20" x 20" square aperture, centered on the beam line. This aperture should be respected with a half-inch "no-man's-land" on either side, meaning the low-beta quad systems should stay within an 18" square. This is necessary to allow the plug iron to slip over the low-beta quads when EF is retracted.

The inner beam valves are followed on each side by a pair of beam position detectors for x and y, which are approximately 12" long and 4" diameter each, followed in turn by ion pumps.

The mechanical support for these device uses two THK rails fastened to the vertical inside walls of the plug iron (PF) at beam elevation, and extending outward about 1 m from PF to support the inner all-metal valve. Trolleys on these rails hold up the inner all-metal valve, beam position monitors and ion pumps while EF and PF might be moving around them. Adjustment devices are necessary for accurate placement of the beam position detectors. An alternate configuration, under consideration, would reorder the components in this region so the beam position detectors are rigidly attached to Q_4.

The length of pipe up to the inner surface of EC must be sufficiently slim to fit through the EC hole as it moves. It is a 2" diameter x 0.025" wall stainless steel pipe. The outside of the pipe carries a very thin heater jacket, such as Kapton foil with printed circuit or wire heating elements. The total thickness of the heater should not exceed 0.040" radially. The heater serves two purposes: Whenever EC moves, one needs to be sure that there is no ice "welding" EC to the beam

pipe and stressing the pipe. The heater melts the ice. Secondly, after initial installation, it will be beneficial to heat this pipe section to remove water vapor for an improved vacuum.

The innermost pipe section is an 80" long beryllium pipe with brazed joints to stainless steel on each side. Just inside the braze joint there is a pipe support "spider" which locates the center section relative to the aluminum support cylinder. The braze joint is followed toward the outside by a thin welded bellows, a 12" long getter pump section, another bellows and a split conflat flange, which mates with a flange on the 2" x 0.025" stainless pipe penetrating EC. The bellows are welded and must be thin radially (approximately 0.150" or less). The getter pump consists of 0.025" wall stainless pipe, coated on the inside with a getter alloy made by SAES. The alloy is activated by heating the pipe from the outside, using a temporary heating jacket, to about 350^0 for two hours. When at room temperature, this section continues to pump many gases. It can be let up to air (or nitrogen) and re-activated 20 to 30 times before replacement is necessary.

The split conflat flange consists of an inner knife edge ring, similar to that of a rotatable conflat flange, and which is welded to the steel pipe. When assembled it is surrounded by a gasket containment ring with bolt holes, backed up by a split ring, also with bolt holes. The inner part has been slightly reduced in radius to 1.150" from the dimensions of a commercial rotatable 3-3/8" conflat flange to fit through the 1.200" radius clear opening of the inner vertex chamber. The outer rings can be made from aluminum (if slightly increased in size) to reduce scattering.

The beryllium pipe is similar to the one used by CDF at BØ. It is made from cross-rolled Be sheet, and brazed into a pipe using a Be seam strip and aluminum braze material. Beryllium sheet is available in a maximum size of 24" by 84" (R. Hardesty, Electrofusion Co.). The ends usually have to be trimmed by up to 2" total, for a maximum manufactured Be length of about 80", discounting the length under the Be-S.S. transitions. This is adequate for the DØ beam pipe, and all ring joints can be avoided. Just like in the CDF case, one would have the manufacturer provide, and take responsibility for, the complete assembly from flange to flange.

Pipe Size and Tolerances

The diameter of the Tevatron beam pipe must accommodate the beam size at injection into Tevatron, before low-beta optics are established. At 300" from the intersection point this size (1-sisma) is roughly 3 mm horizontally x 1 mm vertically.

In the region of the Be pipe the beam will be smaller. Various factors affecting beam pipe diameter are listed below:

Be pipe tolerances and walls	δR = 0.185 inches (may be squeezed to 0.145 inches)
Be pipe off-center tolerance	δR = 0.020 inches (edge seam ovality)
Initial positioning/survey off aluminum support cylinder	δR = 0.020 inches
Initial positioning of platform/CC	δx = 0.080 inches δy = 0.030 inches (D. Eartly)
Ground motion between resets	δy = 0.030 inches (guess)
Thermal expansion ($\delta T=10^0C$)	δy = 0.025 inches

It will be advantageous to orient the pipe such as to place the edge seam in the vertical plane. The Be pipe will be constructed to fit into a cylinder of radius 1.150". After the transition to stainless steel, it will flare down to an outer radius of 1.00 inches. The stainless pipe is round and has no seams.

The following table lists what the antiproton beam "sees" as it travels from the interaction point at DØ upstream to C43. For the area near the experiment more detailed information can be found in "DØ Beam Pipe," DØ Note 462 by Hans Jostlein, October 15, 1986. Pending results of background calculations currently in progress by Mokhov and by VanGinneken, it is expected that the layout of components in the region near the detector will change.

	Distance Upstream From IP (meters)	Length (inches)		Type (see notes) Material	i.d. (inches)	o.d. (inches)	RF shield
DØ	0.						
(in CC)							
Beampipe	1.02	40.		Ber	2.26	2.30	no
(in EC)							
Beampipe	1.44	17.		SS	2.075	2.125	no
Beampipe	4.00	100.		SS SS	2.075 2.277	2.125 2.375	no (sleeve)
(in PF)							
Beampipe	5.65	65.		SS	2.075	2.125	no
COUPLING		19.5		SS	?		
Bellows		( )		SS	?		
ION PUMP(s)	16.75			SS	?		
Beampipe	7.28	64.		SS	2.700	2.796	no
BEAM DET-H		12.		SS	?		
BEAM DET-V	(6.74)	14.5		SS	?		
GATE VALVE		3.38+	G	SS	3.5 (may not be centered)		
bellows?							
PUMP OUT		16.0		SS	?		
bellows?							
GATE VALVE		3.38+	G	SS	3.5 (may not be centered)		
bellows				SS			no
REENTRANT ASSEMBLY		(1.4)		SS	4.1		yes
bellows	(7.62)	(2.0)	E	SS	3.1	3.6	yes
Q_4	11.85	166.5	D	304L	2.700	2.800	no
bellows		(7.0)	F	SS	3.0		yes
Q_3	18.62	266.5	D	304L	2.700	2.800	no
bellows		(7.0)	F	SS	3.0		yes
Q_2	22.85	166.5	D	304L	2.700	2.800	no

bellows		( )	?	SS				
LEADCAN	(22.16 ds) (22.76 us)	24.0	C	304	2.834	3.000	no	
bellows		( )	?	SS				
BYPASS	(32.23)	372.508	C	304	2.834	3.000	no	
bellows		(2.5)	E	SS	3.1	3.6	yes	
DD spool		56.149	D	304L	2.700	2.800	no	
bellows								
Q_1 (C49)	36.19	72.823	D	304L	2.700	2.800	no	
bellows		(2.5)	E	SS	3.1	3.6	yes	
3 DIPOLES	55.40	756.	A	SS				
bellows		(2.5)	E	SS	3.1	3.6	yes	
BARRIERBOX	(54.70 ds) (55.97 us)	49.91	C	304	2.834	3.000	no	
bellows								
BYPASS	60.20	139.186	C	304	2.834	3.000	no	
bellows		(2.5)	E	SS	3.1	3.6	yes	
DD SPOOL	(59.51 ds) (60.60 us)	56.149	D	304L	2.700	2.800	no	
bellows		(2.5)	E	SS	3.1	3.6	yes	
Q_5 (C48)	64.57	72.823	D	304L	2.700	2.800	no	
bellows		(2.5)	E	SS	3.1	3.6	yes	
4 DIPOLES	90.17	1008.0	A	SS				
bellows		(2.5)	E	SS	3.1	3.6	yes	
T<FO=20$_6$ SPOOL		92.00	72.0	D	304L	2.700	2.800	no
bellows		(2.5)	E	SS	3.1	3.6	yes	
STANDARD QUAD (C47)		91.0	B	SS			no	
bellows		(2.5)	E	SS	3.1	3.6	yes	
4 DIPOLES	119.91	1008.0	A	SS				
bellows		(2.5)	E	SS	3.1	3.6	yes	
T_7 SPOOL	121.74	72.0	D	304L	2.700	2.800	no	
bellows		(2.5)	E	SS	3.1	3.6	yes	
STANDARD QUAD (C46)		91.0	B	SS			no	
bellows		(2.5)	E	SS	3.1	3.6	yes	
4 DIPOLES	149.66	1008.0	A	SS				
bellows		(2.5)	E	SS	3.1	3.6	yes	
FEEDCAN	151.49	29.0	C	304	2.834	3.000	no	
bellows		(2.5)	E	SS	3.1	3.6	yes	
STANDARD QUAD (C45)		91.0	B	SS			no	
bellows		(2.5)	E	SS	3.1	3.6	yes	
4 DIPOLES	179.40	1008.0	A	SS				
bellows		(2.5)	E	SS	3.1	3.6	yes	
T_9 SPOOL	181.23	72.0	D	304L	2.700	2.800	no	
bellows		(2.5)	E	SS	3.1	3.6	yes	
STANDARD QUAD (C44)		91.0	B	SS			no	

bellows		(2.5)	E	SS	3.1	3.6	yes
4 DIPOLES	209.14	1008.0	A	SS			
bellows		(2.5)	E	SS	3.1	3.6	yes
T_s SPOOL	210.97	72.0	D	304L	2.700	2.800	no
bellows		(2.5)	E	SS	3.1	3.6	yes
STANDARD QUAD (C43)		91.0	B	SS			no
bellows		(2.5)	E	SS	3.1	3.6	yes
4 DIPOLES	238.89	1008.0	A	SS			

Types:

A. Standard Tevatron dipole beam tube. 3.0" o.d. at end. Square in the center. The transitions between dipoles are not detailed in the above table.

B. Standard Tevatron quadrupole beam tube.

C. Standard Tevatron non-magnetic cryogenic component. 304 Stainless Steel. Nominal 3" o.d. 2.834" i.d., 0.083" thick.

D. Low-beta quadrupole beam pipe. 304L Stainless Steel. Nominal 2.8" o.d. 2.700" $\pm$ 0.004" i.d., 0.0480" $\pm$ 0.0025" thickness.

E. Standard Tevatron beam tube welded bellows. 3.1" i.d., 3.6" o.d. nominal length 2.5".

F. Convoluted (formed) bellows. 3" min. i.d., 4" o.d., 0.065" wall.

G. VAT DN 88 is assumed. Other valves are under consideration.

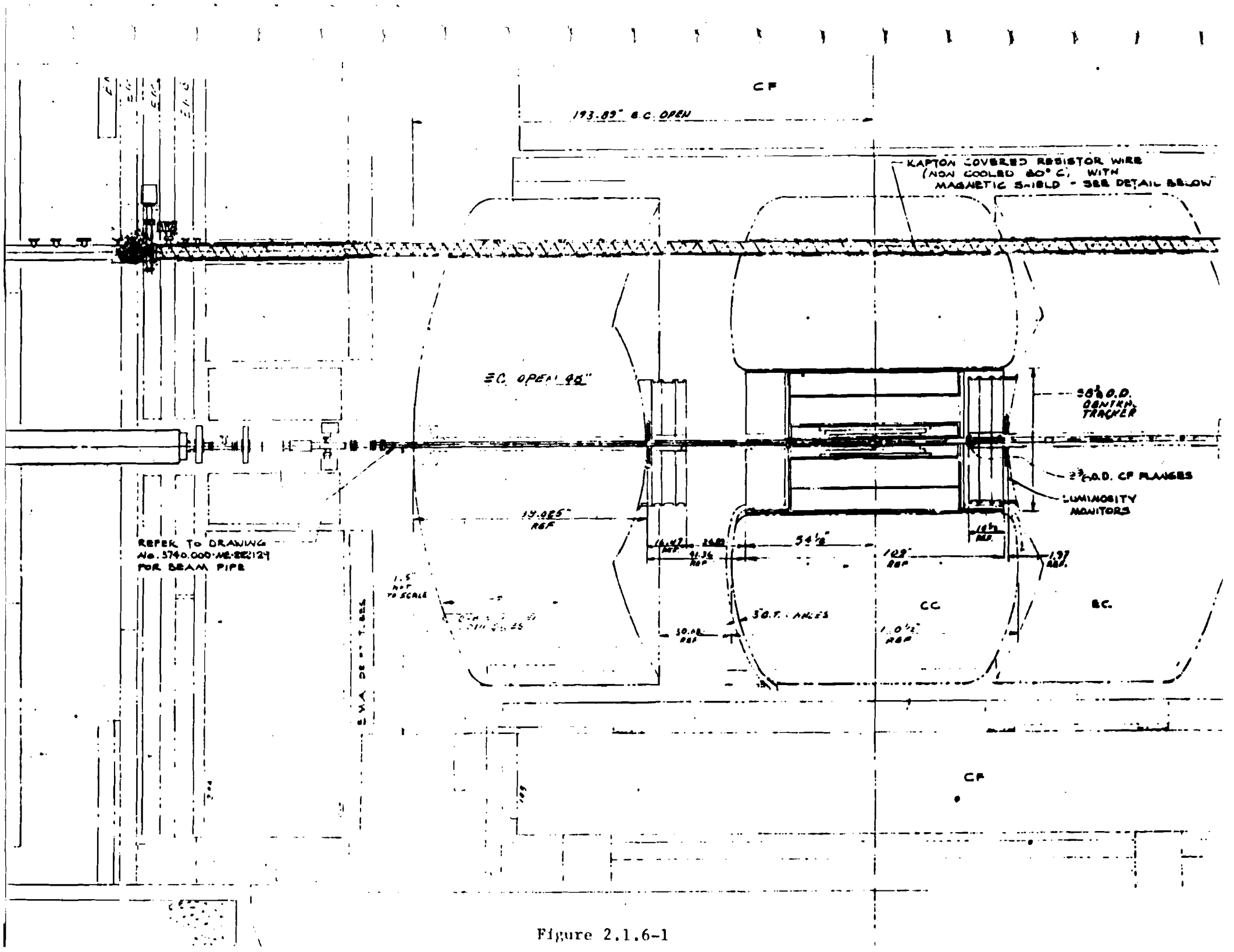
CF
193.89" B.C. OPEN
KAPTON COVERED RESISTOR WIRE
(NOW COOLED 80° C, WITH
MAGNETIC SHIELD - SEE DETAIL BELOW
EC. OPEN 48"
O.D.
CENTRAL
TRACKER
O.D. CF FLANGES
LUMINOSITY
MONITORS
19.025"
REF
54 1/8"
109"
REF
REFER TO DRAWING
No. 3740.000-ME-EE-129
FOR BEAM PIPE
1.5"
NOT
TO SCALE
CC
BC.
CF

Figure 2.1.6-1

2.1.7) Cold Mass Support

Number of support posts	Q_1 2
	Q_2 2
	Q_3 3
	Q_4 2
	Q_5 2
Anchor	HYBAS Type
Total mass supported	Q_1 1200 lb.
	Q_2 2760 lb.
	Q_3 4760 lb.
	Q_4 2760 lb.
	Q_5 1200 lb.
Dynamic load requirements - see 2.1.8)	
Deviation from horizontal	

Predicted Cold Mass Centerline Deflection

	Q_1/Q_5	Q_2	Q_3	Q_4
Outer Span	0.00030" (↓)	0.00090" (↓)	0.00027" (↓)	0.00236" (↓)
Inner Span	-0.00006" (↑)	0.00070" (↓)	0.00188" (↓)	0.00156" (↓)

2.1.8) Cryostat

(Concept Figure 2.1.6-3)

Structural Requirements

•Dynamic Loading
The magnet assembly shall be capable of withstanding, in addition to operational loads, transportation, handling and installation loads and in-place seismic and quench loads as follows:

*Transportation

Vertical	± 2.0 g
Lateral	± 1.0 g
Axial	± 1.5 g

*Handling and installation are not to exceed transportation loads.

*Seismic - Horizontal and vertical design spectra of NRC Regulatory Guide 1.61 scaled to 0.3g earthquake should be used as the interim design seismic criteria.

*Asymmetric quench 18,000 lb. axially

•Cryogenic pipe sizes (See Table 2.1.8-1)

•Cryostat support feet

	Q_1	Q_2	Q_3	Q_4	Q_5
Number	2	2	3	2	2
Dimensional constraints[1]	(See figures 2.1.8-2,3,4)				

Heat Leak Prediction
See Fig. 2.1.8-5

Notes:

1. Q_4 is cantilevered into detector end cap.

Table 2.1.8-1
Q_1, Q_2, Q_3, Q_4, Q_5 Cryogenic Piping Details

Function	Fluid [1]	Pressure [psig]	Temperature [K]	Flow Rate [g/s]	Pressure Drop 1 [psid]	Pipe ID [in]	Pipe Wall [in]
Steady State							
1ø Supply[2] (coil)	Helium	16	4.7	30	.005	10.875	.1875
1ø Return (pipe)	Helium	16	4.7	30	.005	1.245	.065
2ø Supply[3,4]	Helium	5		30	.030		
2ø Return[3]	Helium	5	4.7	30	.030	.870	.065
80K Supply	Nitrogen		80			.745	.065
80K Return	Nitrogen		80			.754	.065
Cooldown/Warmup[5]							
1ø Supply[2]	Helium						
1ø Return	Helium						
2ø Supply[4]	Helium						
2ø Return	Helium						
80K Supply	Nitrogen	5	300	10	0.5		
80K Return	Nitrogen	5	300	10	0.5		
Upset[5,6]							
1ø Supply[2]	Helium						
1ø Return	Helium						
2ø Supply	Helium						
2ø Return[4]	Helium						
80K Supply	Nitrogen						
80K Return	Nitrogen						

Notes

1. Pressure drop per magnet.
2. Flow in yoke passages.
3. Homogeneous with 60% liquid.
4. Flow in shell outside of cold mass skin.
5. Worst conditions.
6. Quench, loss of vacuum, etc.

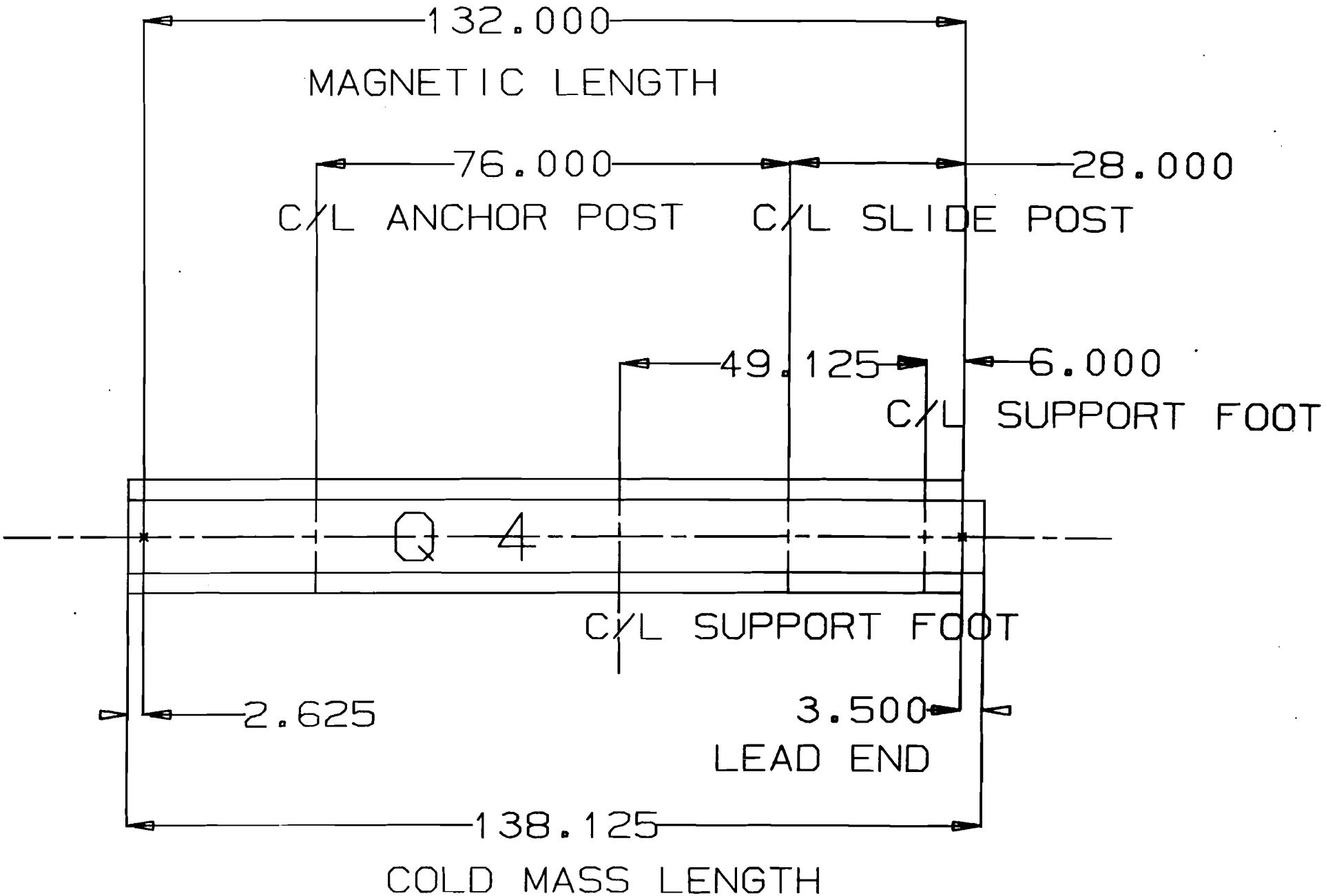
132.000
MAGNETIC LENGTH
76.000
28.000
C/L ANCHOR POST
C/L SLIDE POST
49.125
6.000
C/L SUPPORT FOOT
Q 4
C/L SUPPORT FOOT
2.625
3.500
LEAD END
138.125
COLD MASS LENGTH

Figure 2.1.8-2

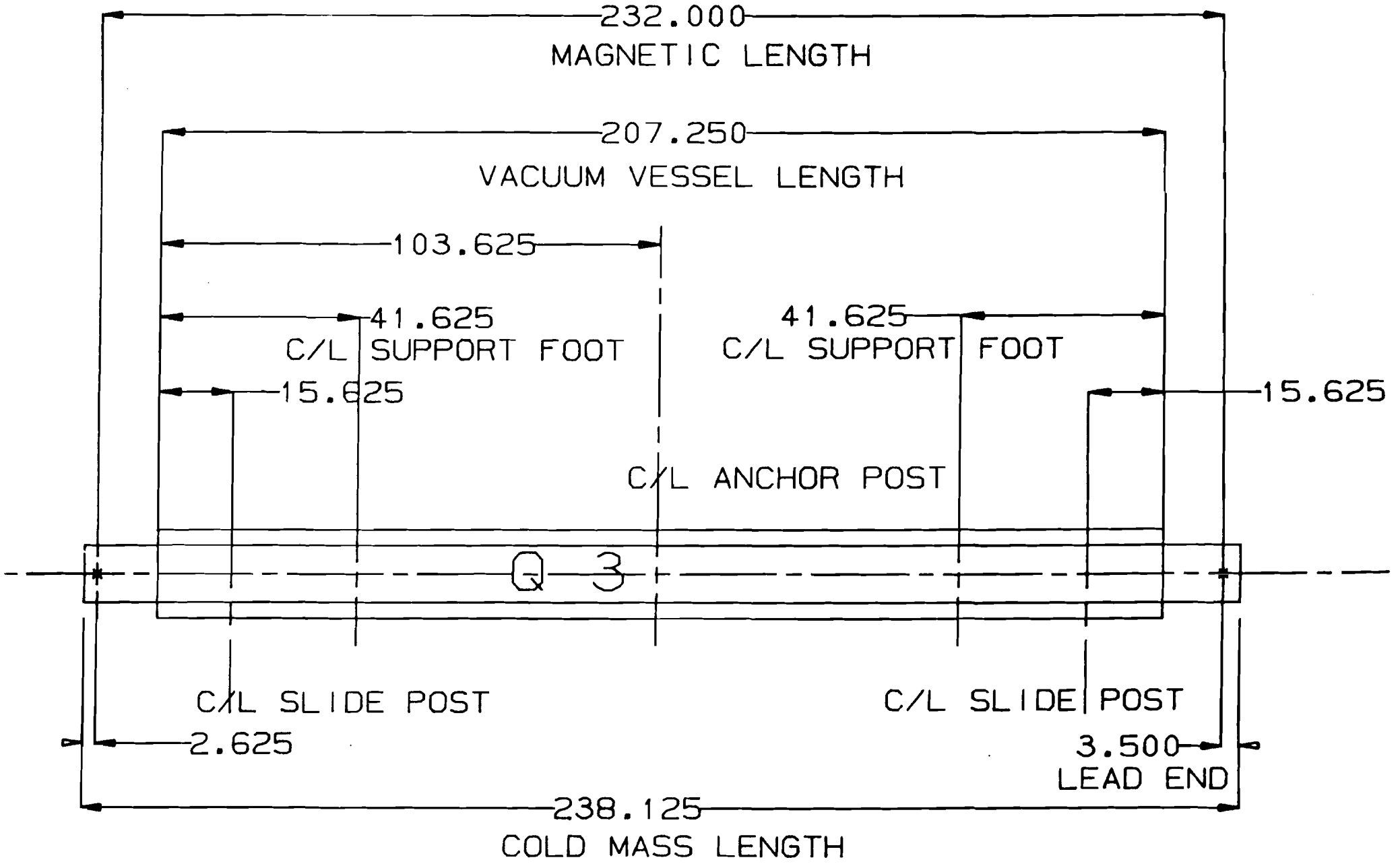
232.000
MAGNETIC LENGTH
207.250
VACUUM VESSEL LENGTH
103.625
41.625
C/L SUPPORT FOOT
41.625
C/L SUPPORT FOOT
15.625
15.625
C/L ANCHOR POST
Q 3
C/L SLIDE POST
C/L SLIDE POST
2.625
3.500
LEAD END
238.125
COLD MASS LENGTH

Figure 2.1.8-3

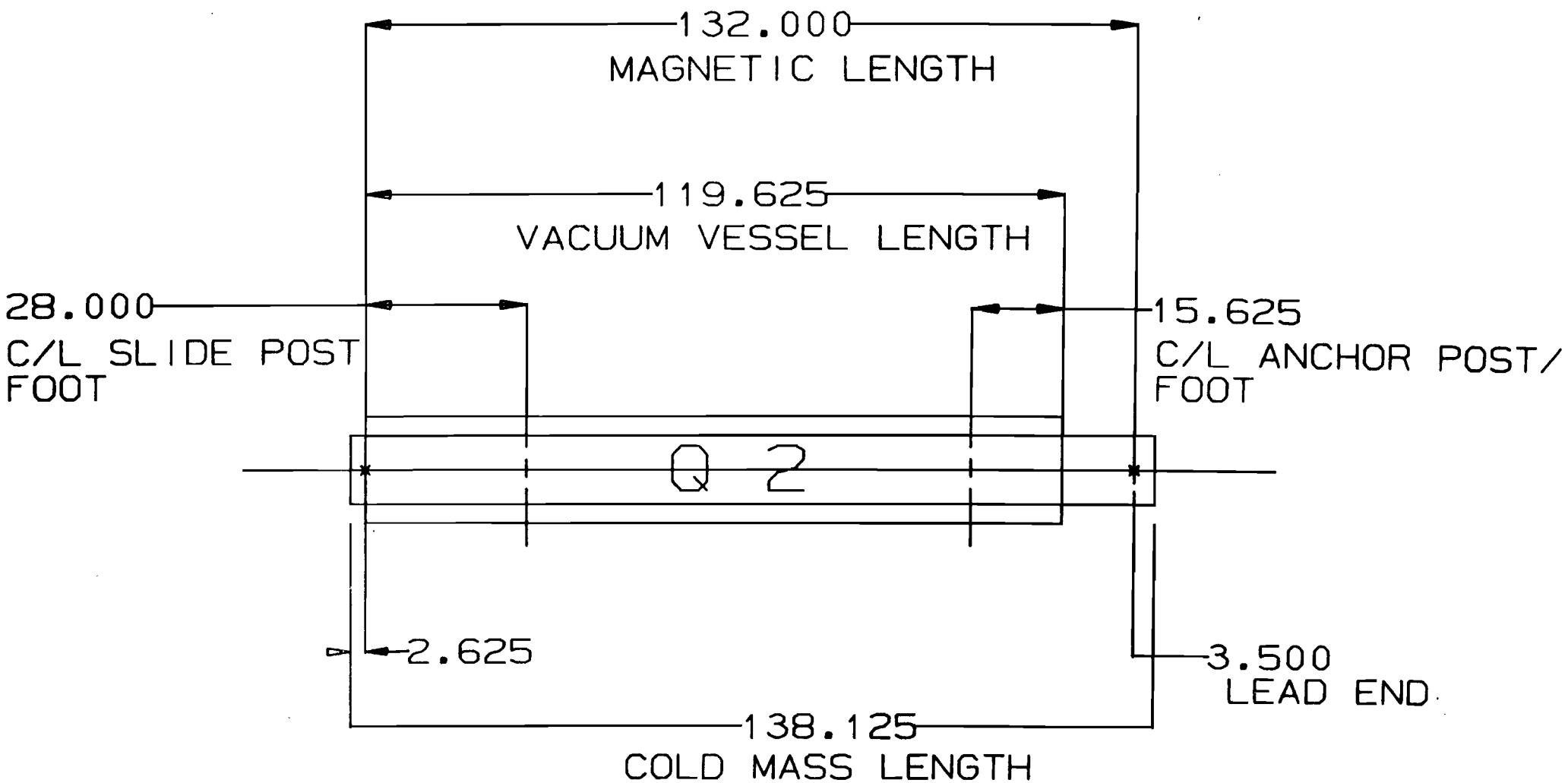
132.000
MAGNETIC LENGTH
119.625
VACUUM VESSEL LENGTH
28.000
C/L SLIDE POST
FOOT
15.625
C/L ANCHOR POST/
FOOT
Q 2
2.625
3.500
LEAD END
138.125
COLD MASS LENGTH

Figure 2.1.8-4

LBQ Cryostat
Heat Leak Predictions

	to LN_2 [W]			to LHe [W]		
	Q_1/Q_5	Q_2/Q_4[1]	Q_3	Q_1/Q_5	Q_2/Q_4[2]	Q_3
• Budget[3]	10.0	10.0	10.0	3.0	3.0	3.0
• Predicted						
- Supports[4]	7.46	7.46	11.19	0.918	0.918	1.377
- Thermal radiation	1.27	2.92	5.03	0.021	0.047	0.081
- Gas conduction	0.03	0.07	0.12	0.015	0.035	0.060
Total	8.76	10.45	16.34	0.954	1.000	1.518

Notes

1. Q_4 does not include end shine ($\Delta HL=5W$)
2. Q_4 does not include end shine ($\Delta HL=9W$)
3. Pink Book
4. As measured without cold mass connection-slide in HLTF

Figure 2.1.8-5

2.1.9) Alignment

2.1.9.1 Q_0 Region

2.1.9.2 Q_1 Region

a. requires motorized stands, vertical and horizontal
b. requires interface bellows which allow ±1/8 inch orthogonal motion between magnets

2.1.9.3 $Q_{2,3,4}$ Region

a. requires motorized stands, vertical and horizontal
b. requires interface bellows which allow ±1/8 inch orthogonal motion between magnets
c. Q_4 requires a bellows between the all-metal valve and beam tube of the magnet

2.2) Quadrupole Correctors

The quadrupole corrector requires a gradient of 0.724 tesla/cm over 21.5 inches. Since each quad must be powered separately low current and associated low heat leak is highly desirable.

Although the required gradient is the same as that of the Tevatron lattice quad, recent increases in current density have made possible a one-layer coil geometry. The conductor geometry is similar to that proposed for the one-shell quadrupole for the RHIC collider at Brookhaven.[1]

Low current is achieved by the use of a cable made up of five insulated rectangular monolithic conductors. This segmented cable is similar in shape and size to the Rutherford type cables used in the low-beta quads and accelerator magnets. The segmented cable can be wound and cured on the same tooling used to wind the inner shell of the low-beta quadrupole. The five conductors are then connected in series at the end of the magnets to make a magnet that operates at about one-fifth of the current of a magnet wound with normal cable. The segmented cable scheme was successfully demonstrated in an early development model made at Fermilab for the final focus of the Stanford Linear Collider.[2]

Notes:

1. P. Thompson, "RHIC Arc Quadrupole," BNL 202-16 (RHIC-MD-49).

2. R. A. Lundy et al., "High Gradient Superconducting Quadrupoles."

2.2.1) Conductor Specification

Strand (rectangular monolith)	Practice Wind Material (Note 1)	Final Material (Note 2)
Alloy	NbTi	NbTi
Copper to superconductor ratio	1.8:1	1.5:1
Number of filaments	2120	612
Filament spacing to diameter	0.3 (?)	<0.2
Twist pitch (twists/in.)	2	2
Filament diameter	20μ	44μ
J_c at 4.2K and 5T (A/mm^2)		2200
I_c at 4.2K and 5T (A)		~1700
Conductor dimensions	0.0430 in. x 0.0694 in.	0.0430 in. x 0.0694 in.
Insulation:	2/3 lap, 0.001 Kapton	2/3 lap, 0.001 Kapton

Cable (see figure 2.2.1-1)

Number of strands	5 identical parallel strands separately insulated
Cable dimensions (insulated):	0.391 in. x 0.059 compressed
Keystone	None

Notes:

1. This is essentially Tevatron conductor. To be used only for qualification of tooling.
2. This is the same conductor that is used in the low-beta quadrupole. The performance is not expected to be as high because of the larger final conductor area.

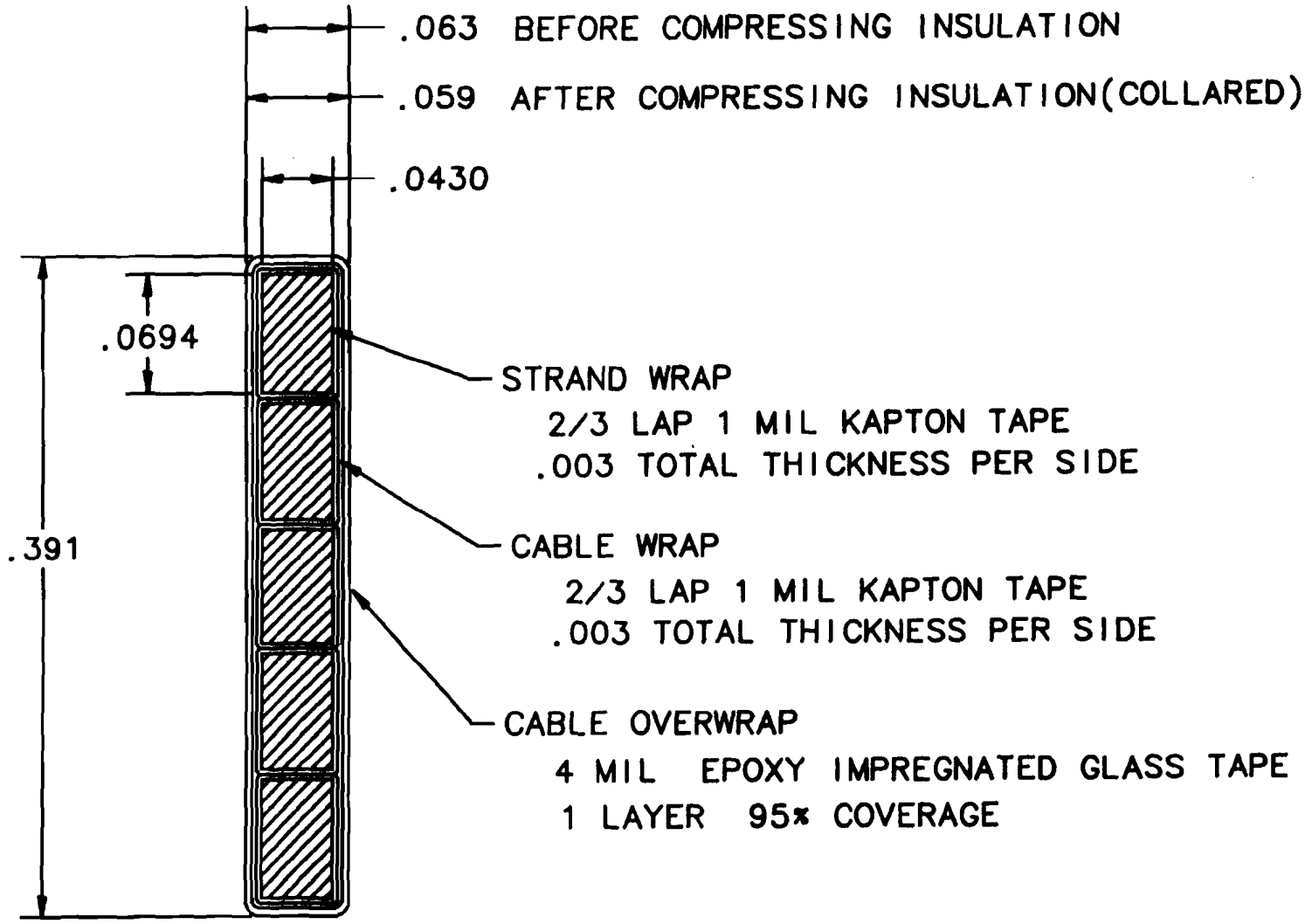
.063 BEFORE COMPRESSING INSULATION
.059 AFTER COMPRESSING INSULATION(COLLARED)
.0430
.0694
.391
STRAND WRAP
2/3 LAP 1 MIL KAPTON TAPE
.003 TOTAL THICKNESS PER SIDE
CABLE WRAP
2/3 LAP 1 MIL KAPTON TAPE
.003 TOTAL THICKNESS PER SIDE
CABLE OVERWRAP
4 MIL EPOXY IMPREGNATED GLASS TAPE
1 LAYER 95% COVERAGE

Figure 2.2.1-1

2.2.2) Quad Corrector Coil Specification

Coil Windings (see Figures 2.2.2-1, 2.2.2-2, 2.2.2-3)	
Number of turns per pole	13
Number of wedges	2
Inner diameter w/o insulation (Note 1)	3.008
Outer diameter w/o insulation	3.778
Cable length	168 ft per coil

Coil Insulation:
Parting plane insulation (2).005 layers .010 Kapton Total
Ground insulation thickness (4).005 layers Kapton Total

Stored energy	12,040 J/m at 1.1 kA
Inductance	19.9 mH/m

Notes:

1. The inner and outer diameters are the same as those for the low-beta quad inner. The same tooling is used.

Coil physical dimensions

Available slot length	30.0 in. (Note 3)
Coil length:	22.875 in. 27.5 in.
Magnetic length (Note 4)	21.5 in. 25 in.

Calculated harmonics

Pole	Body	Integrated (Note 5)
4	10^4	10^4
12	0.000	0.000
20	0.000	0.000
28	0.899	0.800
36	-0.156	-0.142
44	0.119	0.108
52	-0.004	-0.004

Notes:

1. Contains strand splices.
2. Calculation by A. Riddiford 11/18/87.
3. Ends designed to be harmonically neutral (A. Riddiford note 11/18/87).

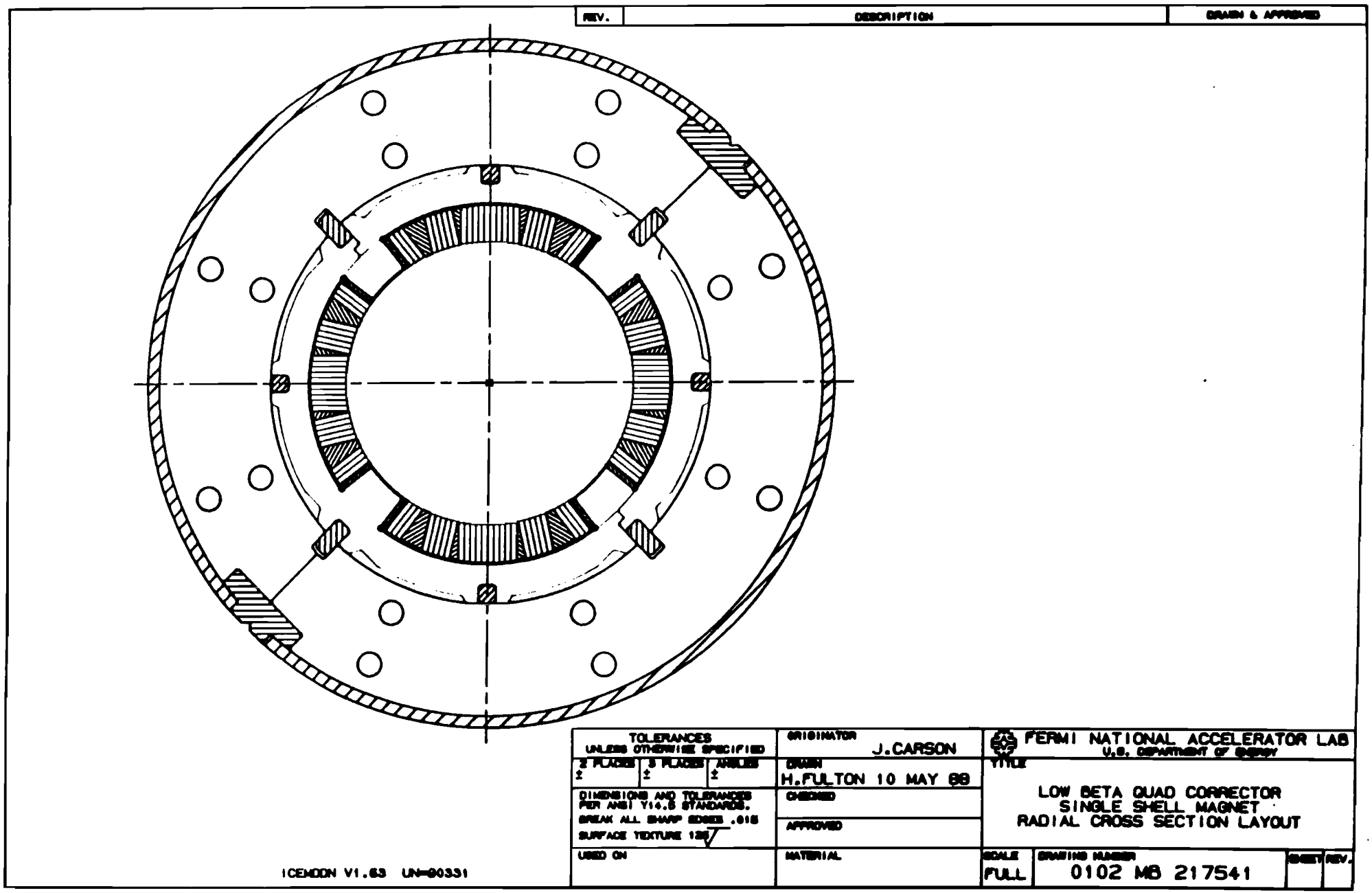
REV.
DESCRIPTION
DRAWN & APPROVED
TOLERANCES
UNLESS OTHERWISE SPECIFIED
2 PLACES ±
3 PLACES ±
ANGLES ±
DIMENSIONS AND TOLERANCES PER ANSI Y14.5 STANDARDS.
BREAK ALL SHARP EDGES .015
SURFACE TEXTURE 125
ORIGINATOR
J.CARSON
DRAWN
H.FULTON 10 MAY 89
CHECKED
APPROVED
USED ON
MATERIAL
FERMI NATIONAL ACCELERATOR LAB
U.S. DEPARTMENT OF ENERGY
TITLE
LOW BETA QUAD CORRECTOR
SINGLE SHELL MAGNET
RADIAL CROSS SECTION LAYOUT
SCALE
FULL
DRAWING NUMBER
0102 MB 217541
SHEET
REV.
ICEMODN V1.63 UN=00331

Figure 2.2.2-1

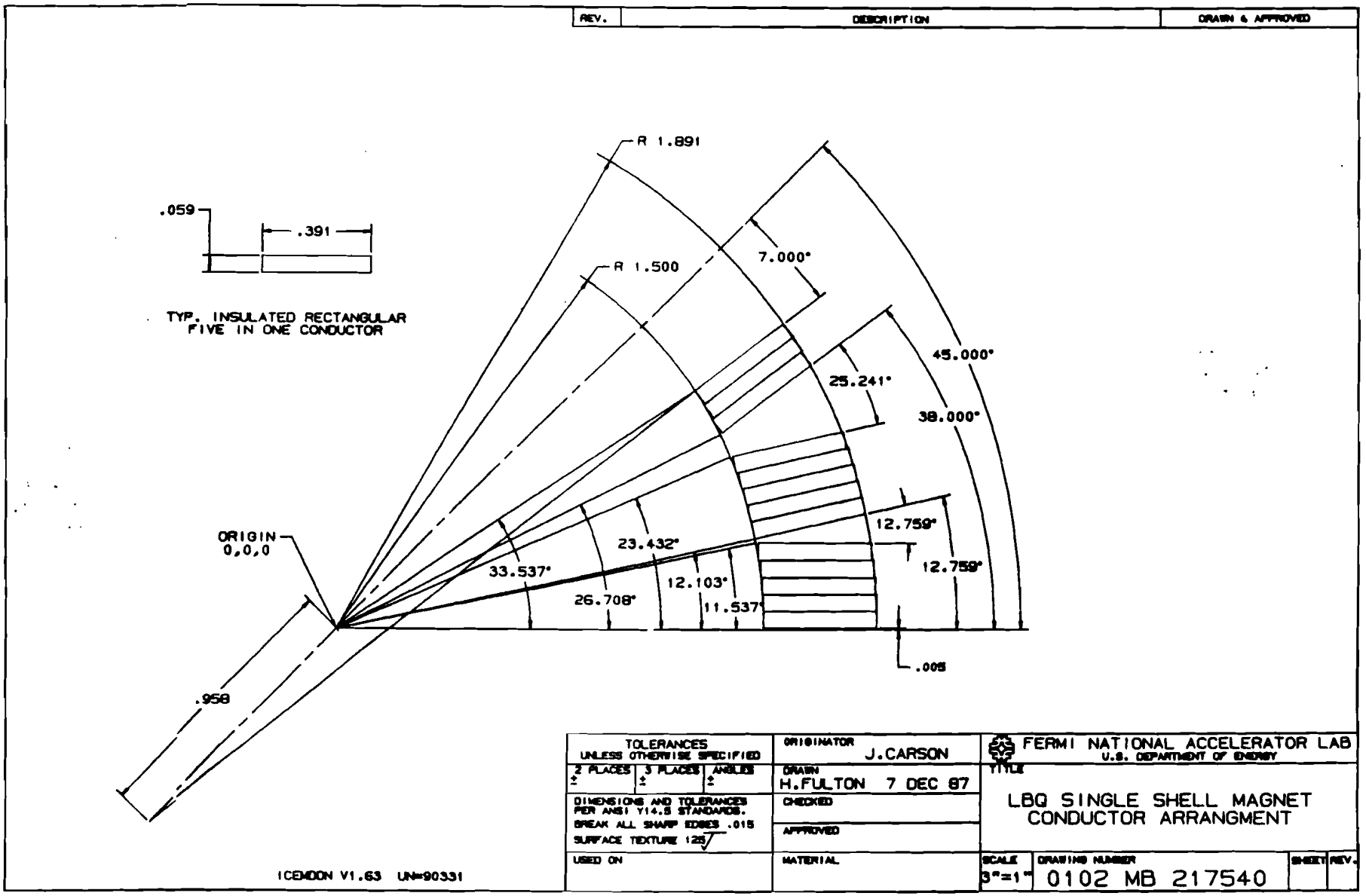
REV.
DESCRIPTION
DRAWN & APPROVED
R 1.891
R 1.500
.059
.391
TYP. INSULATED RECTANGULAR
FIVE IN ONE CONDUCTOR
7.000°
45.000°
25.241°
38.000°
12.759°
12.759°
23.432°
33.537°
26.708°
12.103°
11.537°
ORIGIN
0,0,0
.958
.005
TOLERANCES
UNLESS OTHERWISE SPECIFIED
2 PLACES ±
3 PLACES ±
ANGLES ±
DIMENSIONS AND TOLERANCES
PER ANSI Y14.5 STANDARDS.
BREAK ALL SHARP EDGES .015
SURFACE TEXTURE 125
USED ON
ORIGINATOR
J.CARSON
DRAWN
H.FULTON 7 DEC 87
CHECKED
APPROVED
MATERIAL
FERMI NATIONAL ACCELERATOR LAB
U.S. DEPARTMENT OF ENERGY
TITLE
LBQ SINGLE SHELL MAGNET
CONDUCTOR ARRANGMENT
SCALE
3"=1"
DRAWING NUMBER
0102 MB 217540
SHEET
REV.
ICEMOON V1.63 UN=90331

Figure 2.2.2-2

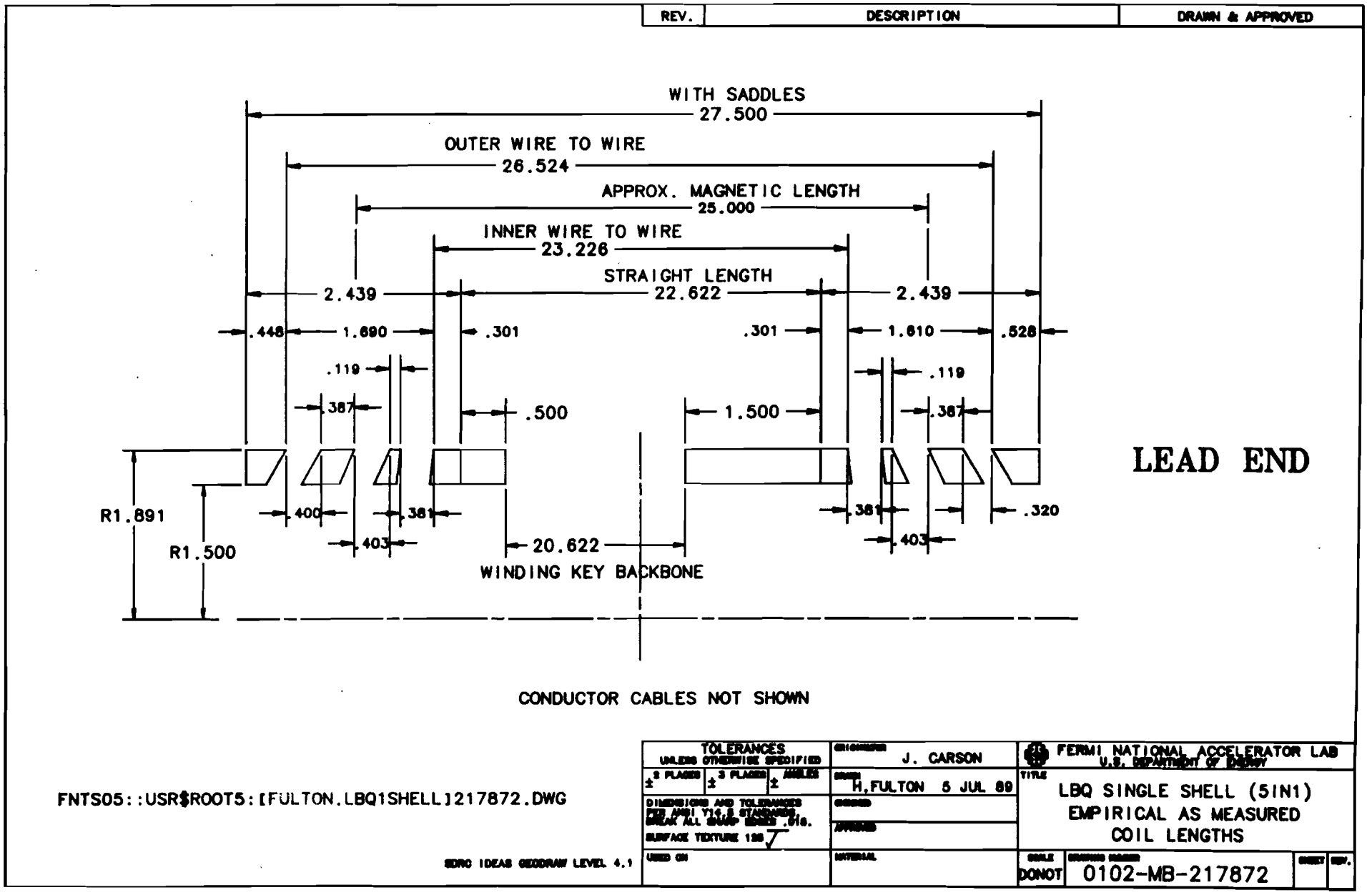
REV.
DESCRIPTION
DRAWN & APPROVED
WITH SADDLES
27.500
OUTER WIRE TO WIRE
26.524
APPROX. MAGNETIC LENGTH
25.000
INNER WIRE TO WIRE
23.226
STRAIGHT LENGTH
22.622
2.439
2.439
.448
1.690
.301
.301
1.610
.528
.119
.119
.387
.387
.500
1.500
LEAD END
R1.891
R1.500
.400
.381
.381
.320
.403
.403
20.622
WINDING KEY BACKBONE
CONDUCTOR CABLES NOT SHOWN
FNTS05::USR$ROOT5:[FULTON.LBQ1SHELL]217872.DWG
SDRC IDEAS GEODRAW LEVEL 4.1
TOLERANCES
UNLESS OTHERWISE SPECIFIED
J. CARSON
H.FULTON 5 JUL 89
FERMI NATIONAL ACCELERATOR LAB
U.S. DEPARTMENT OF ENERGY
LBQ SINGLE SHELL (5IN1)
EMPIRICAL AS MEASURED
COIL LENGTHS
DONOT
0102-MB-217872

Figure 2.2.2-3

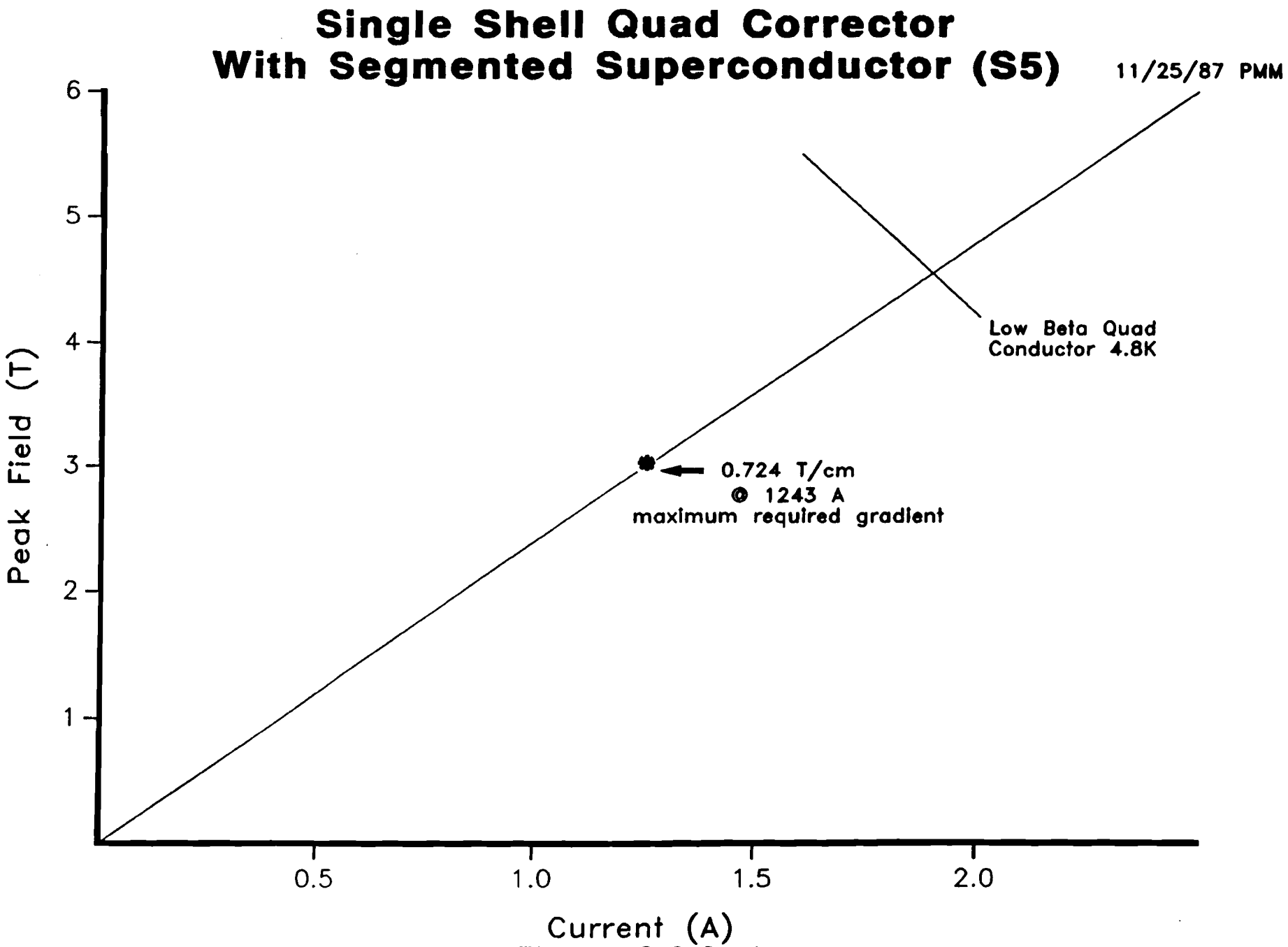
Single Shell Quad Corrector
With Segmented Superconductor (S5)
11/25/87 PMM
Low Beta Quad
Conductor 4.8K
0.724 T/cm
@ 1243 A
maximum required gradient
Peak Field (T)
6
5
4
3
2
1
0.5
1.0
1.5
2.0
Current (A)

Figure 2.2.2–4

2.3) Refrigerator Specification

INTRODUCTION

The design for low-β cryogenics has changed significantly (June through August, 1987). All magnets will be at 4.7 K, with 1.8 K in some location(s) as a future option.

USE OF THE EXISTING SATELLITE REFRIGERATORS AND CHL

The facts that most of the magnets will be at 4.7 K and that they will be cold-iron, low heat leak magnets allow them to be added to the existing C4 and D1 satellite refrigerators. Our presently operating BØ low-beta system was added to the existing satellite refrigerators on each side of BØ. If the new DØ low-beta magnets and associated components can be designed to add less heat to the helium system than the BØ low-beta magnets (about 100 watts at 4.7 K per satellite refrigerator), then additional helium refrigeration capacity for DØ low-beta will not be necessary. The use of cold-iron magnets and SSC-style support posts should result in such a low heat load.

As a future upgrade option, about 5% of the "single-phase" (4.7 K, 2 atm) helium could be tapped off and further cooled to 1.8 K to cool a 1.8 K quadrupole. Such a low temperature will require continuously pumping a bath of liquid helium to a pressure of about 0.016 atmospheres. Other methods (such as magnetic refrigeration) could be developed for cooling helium to such low temperatures, with the advantage of eliminating the low pressure helium pumping and its danger of air leaking in, but considerable R & D might be required. Even the more conventional vacuum pumping technique will require a significant design effort. As a fall-back position any 1.8 K quadrupole should be operable at 4.7 K, providing a higher but still acceptable β^*.

A SUPERFLUID MAGNET TEST STAND

For testing a magnet at 1.8 K (helium becomes superfluid below 2.17 K) a special test stand has been designed and constructed. It incorporates a warm vacuum pumping system and other special components for making and handling superfluid which will also be required in any 1.8 K magnet cooling system. Thus, the test stand both serves to test prototype superfluid components and the low-beta magnets. Other proposals for 1.8 K accelerator magnet systems, such as "Preliminary Study of a Superfluid Helium Cryogenic System for the Large Hadron Collider," by G. Claudet, et al., and the possibility of avoiding "training" quenches in SSC magnets by conditioning them in superfluid helium make this superfluid test stand and the operation of a magnet in superfluid significant developments for the accelerator community.

IMPACT ON CHL

Although the heat leaking in via the magnets and other components is being designed to be small enough to add to the existing satellite refrigerators, the additional liquid required by the power leads and any superfluid magnet will significantly add to the demand on CHL. DØ

low beta requires nine separately powered quadrupoles on each side of the interaction region. This results in a total of thirty-two vapor-cooled current leads. These leads will consume an additional 360 liters per hour of liquid helium from CHL via our liquid helium transfer line, an increase of about 12%. The increased CHL capacity provided by operating the second coldbox with its higher capacity (35%) Rotoflow turbines will satisfy this increased demand for liquid helium.

SUMMARY

The DØ low-beta cryogenic system as presently planned includes both cold-iron, low heat leak 4.7 K quadrupole magnets cooled by the existing satellite refrigerators and eventually magnets cooled with superfluid helium which is produced by locally cooling some of the 4.7 K satellite refrigerator flow to 1.8 K in special subcoolers. The additional liquid demanded for power leads and the production of superfluid can be provided by the second, higher capacity, CHL coldbox. A 1.8 K test stand will provide both a test facility for the low-temperature magnets and information regarding the design and performance of the special components required for producing and handling superfluid. Worldwide interest in the operation of accelerator magnets in superfluid give this project special significance.

DØ Low-Beta Cryogenic Requirements

Component	# Leads	Lead Size amps	Existing Load watts	New Load watts	Lead Flow 1/hr
Q_4			0	12	
Q_3			0	3	
Q_2			0	3	
Six Power Lead Can	6	5000	0	15	82.5
Bypass			0	1	
New Spool	2	5000	10	15	27.5
Q_1			5	3	
Barrier Box	2	5000	15	20	27.5
New Spool	2	5000	10	15	27.5
Q_5			5	3	
T_6 Spool	2	5000	10	15	27.5
T_7 Spool	2	2000	10	13	11
T_8 Spool	2	2000	10	13	11
T_9 Spool	2	2000	10	13	11
Collins Quads			10	0	
	Total Additional Head Load			49	198
	Increase per Refrigerator			6.4%	5.8%
Total Increase in CHL Consumption (BØ & DØ)					14.7%

Notes:

1. Only loads for Q_5 through T_9 were considered as additional loads for BØ.

2. Power lead flow requirements were based on 2.75 1/hr/kA/lead.

3. The total CHL increase shown will require either the new higher capacity CHL or a considerable retuning of the satellite refrigerators.

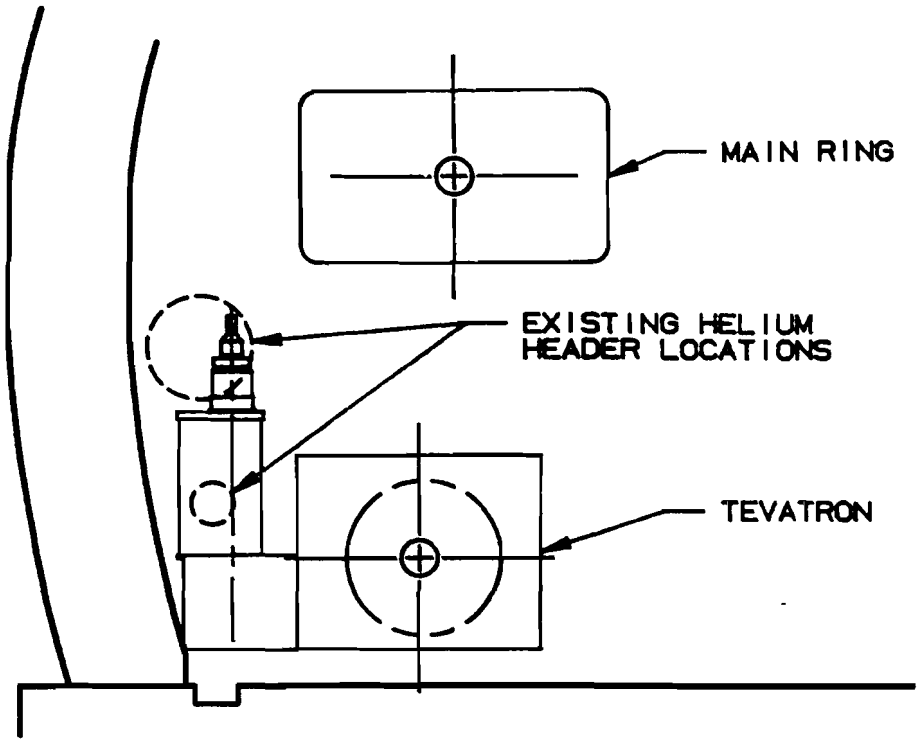

WORST CASE INTERFERENCE AT D-17-1 LOW BETA POWER SPOOL

Known Problems	Potential Solutions
Helium and Nitrogen headers interfere with new spool	Relocate headers up ~20" from C43 to D17
Header Relocation	
- may interfere with wall bus in some locations	Relocate bus as required
- may interfere with MR magnet bus working some locations	May need to turn MR magnet 180 degrees to have bus in aisle or further relocate headers
- may interfere with MR stands in some locations	Investigate
Bus routing to new power spools	May be able to wedge bus between 8" header and MR magnets. This will require careful insulation but will not capture MR magnet.
New power spool hits tunnel wall	Chip out outer wall as necessary

D-0 LOW BETA MECHANICAL INSTALLATION

REVISION 0, PRINTED 10/20/87

Figure 3.1.1-1

ASSUMPTIONS

1. LOW BETA GIRDERS ARE PREFABRICATED AND IN THE ALCOVES PRIOR TO SHUTDOWN, MOTORIZED STANDS INCLUDED
2. MAJOR 2*2 BUSS RUNS INSTALLED AND LEAK CHECKED PRIOR TO SHUTDOWN
3. SCHEDULE REFLECTS NO DETECTOR INTERFERENCE

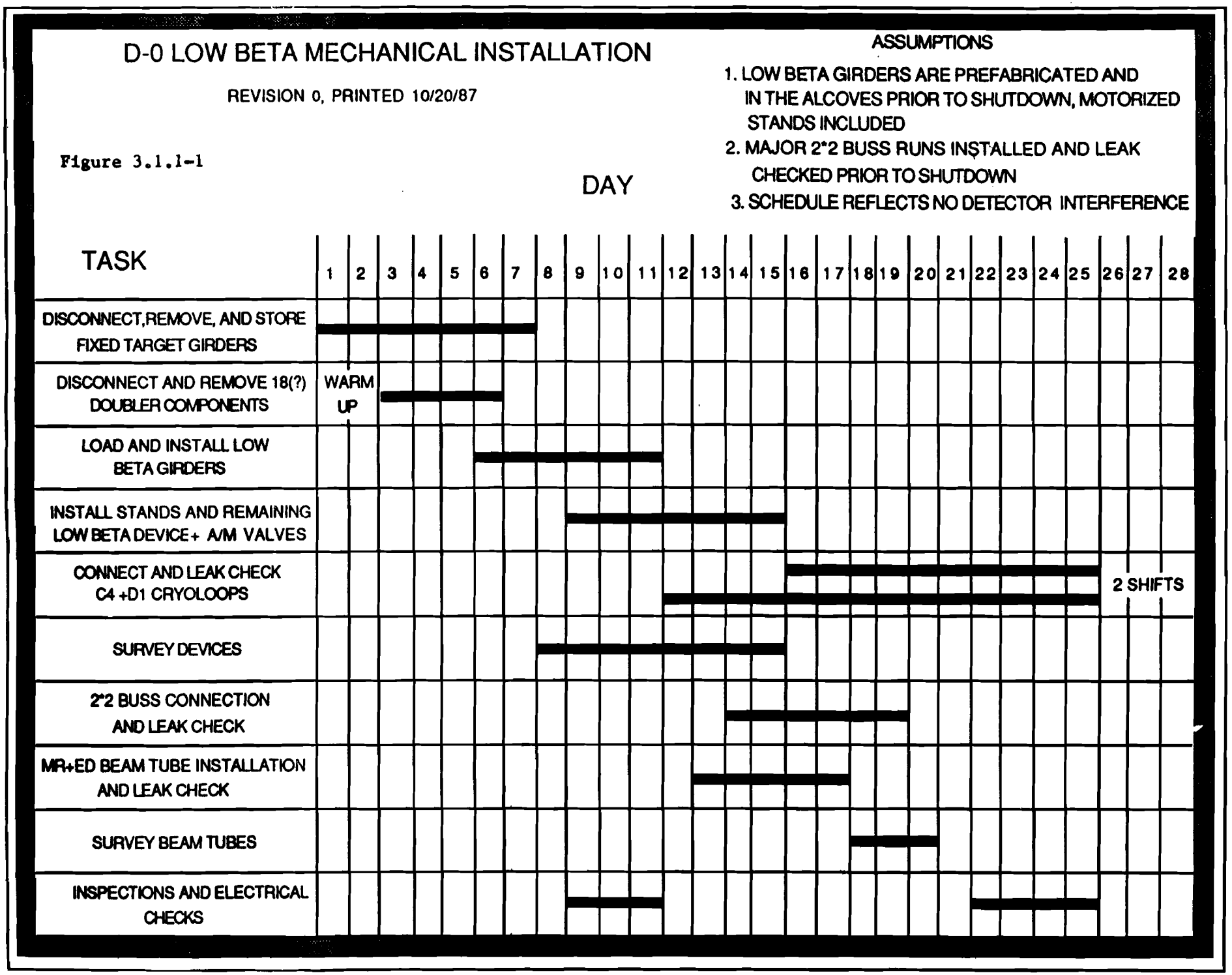

DO LOW BETA CRYOGENICS SCHEDULE

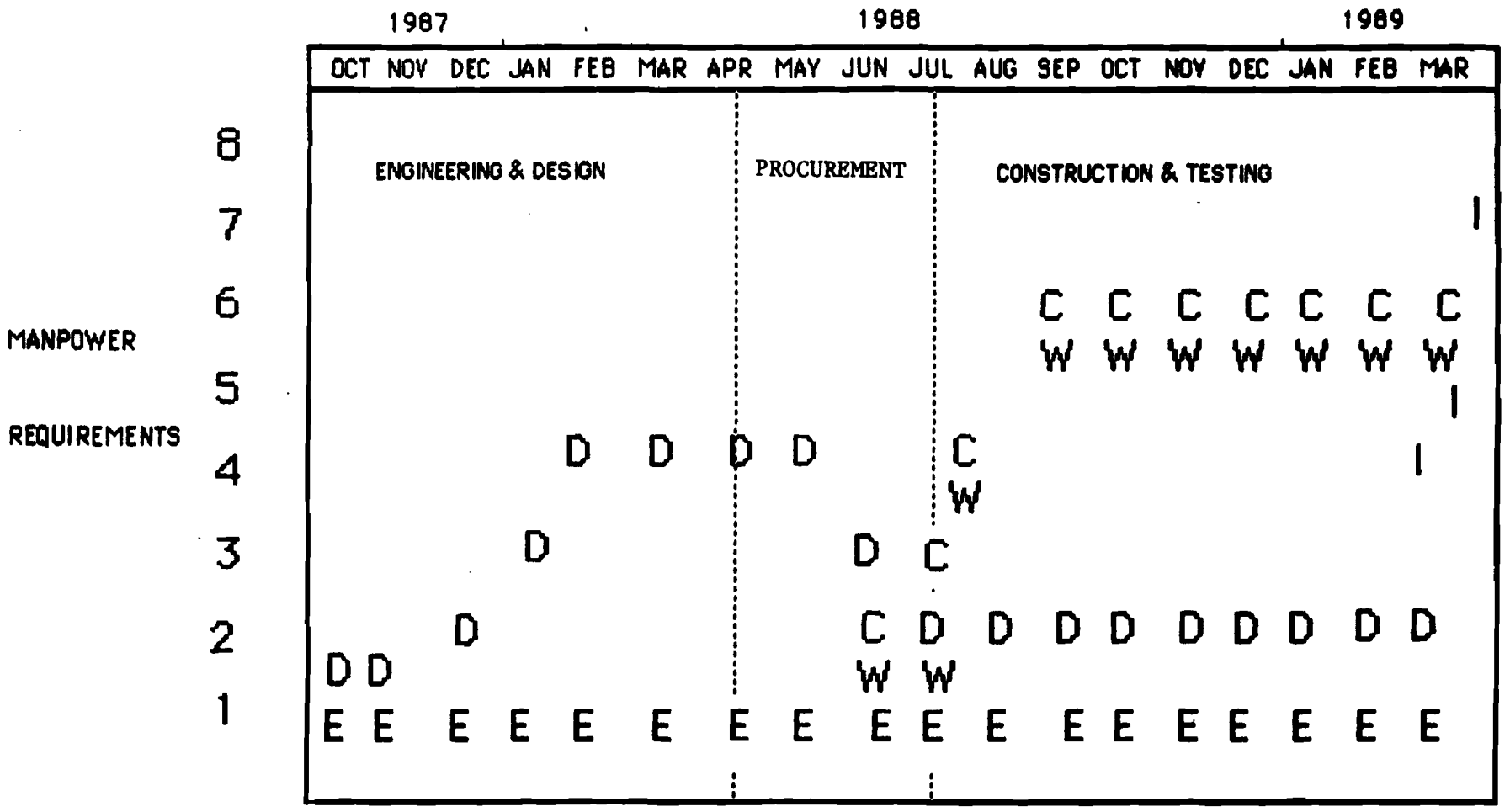

Engineering
Design
Construction
Welding
INSTALLATION

Figure 3.1.2-1

4.0) Measurement Results

4.1 Single-shell quad corrector

4.1.1 Conductor

Strand Short Sample *

4.1.2 Quench Behavior

The load line for the S5 quad corrector is 2.66 T/kA. A performance prediction based on short sample is in the range of 1.8 - 1.9 kA @ 4.2 K. The maximum operating point is 1 kA @ 4.8 K. Figures 4.1.1-1 a and b show examples of the training behavior and ramp rate dependence.

Figure 4.1.1-1 (a) S5 Training Quenches

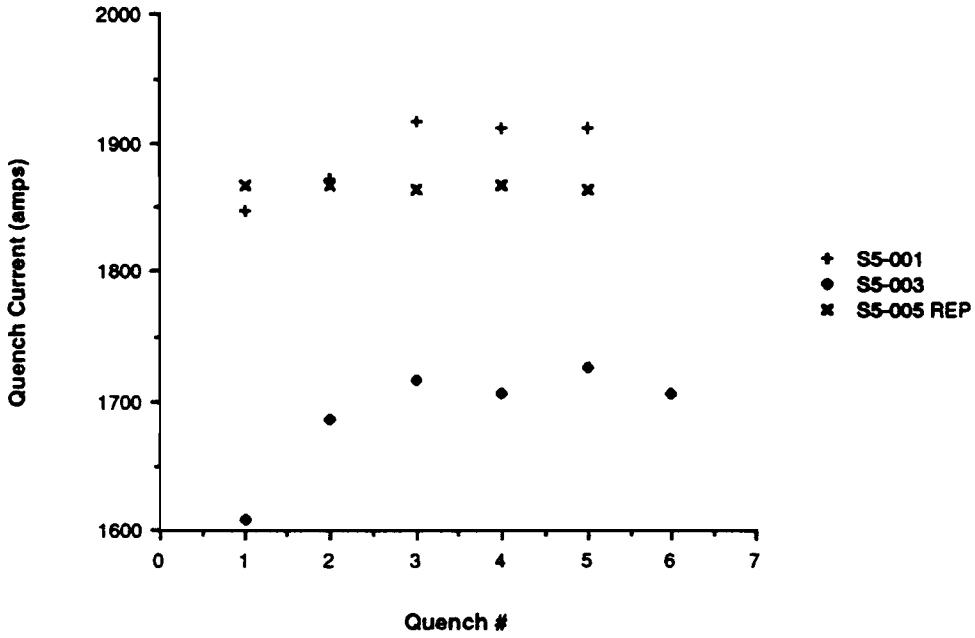

Figure 4.1.1-1 (b) S5 Ramp Rate Dependence

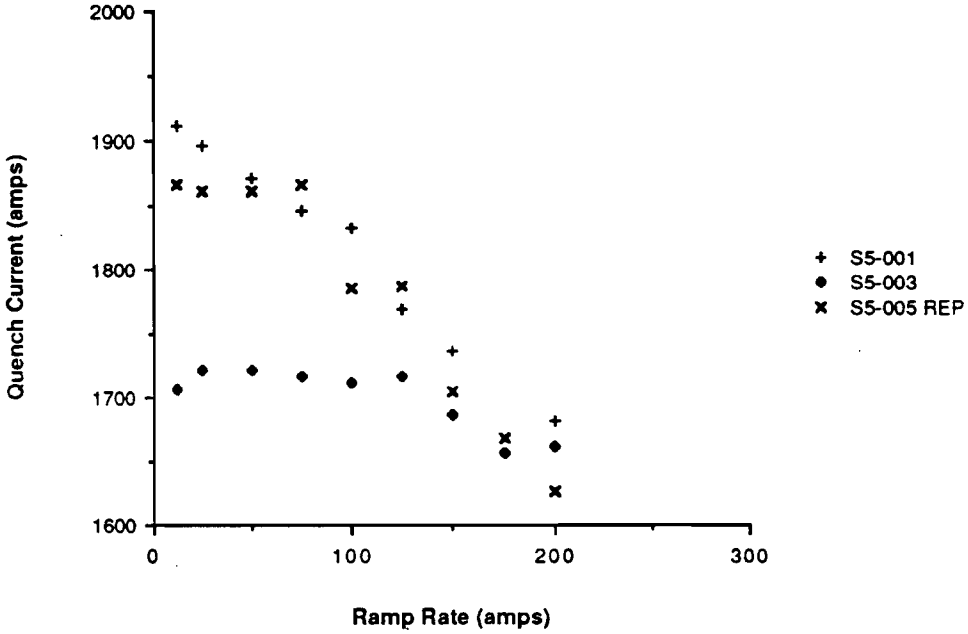

4.2) Two-shell quad

4.2.1 Conductor

Strand and cable short sample *

Figure 4.1.2-1 shows the distribution for critical current of strand sampler taken from the first nine billets.

Table 4.1.2-1 is a summary of strand and cable data and predicted magnet performance based on a load line of 1.29 T/kA.

Table 4.1.2-1 Low-Beta Quad Conductor Performance

Reel #	Ic @ 6T (kA)	Avg. Strand Ic	Pred. Magnet Degradation	Performance (kA) 4.2K	4.8K
41-387A	6.56	208.5	12.6%	5.29	4.80
41-387B	6.73	208.5	10.4%	5.33	4.84
41-388	6.72	208.5	10.5%	5.33	4.84
41-403*	6.42	201.5	11.4%	5.25	4.76
41-411A	7.10	212.0	6.9%	5.43	4.93
41-411B	7.03	212.0	7.9%	5.41	4.91
41-411C	6.94	212.0	9.0%	5.39	4.89
41-412A	6.95	212.0	8.9%	5.39	4.89
41-412C	7.03	212.0	7.9%	5.41	4.91
41-413B	6.95	210.5	8.3%	5.39	4.89
41-414	7.04	212.0	7.7%	5.41	4.92
41-416B	7.40	214.5	4.2%	5.50	5.00
41-419	7.21	214.0	6.4%	5.45	4.95

*Redrawn to nominal .0208" diameter

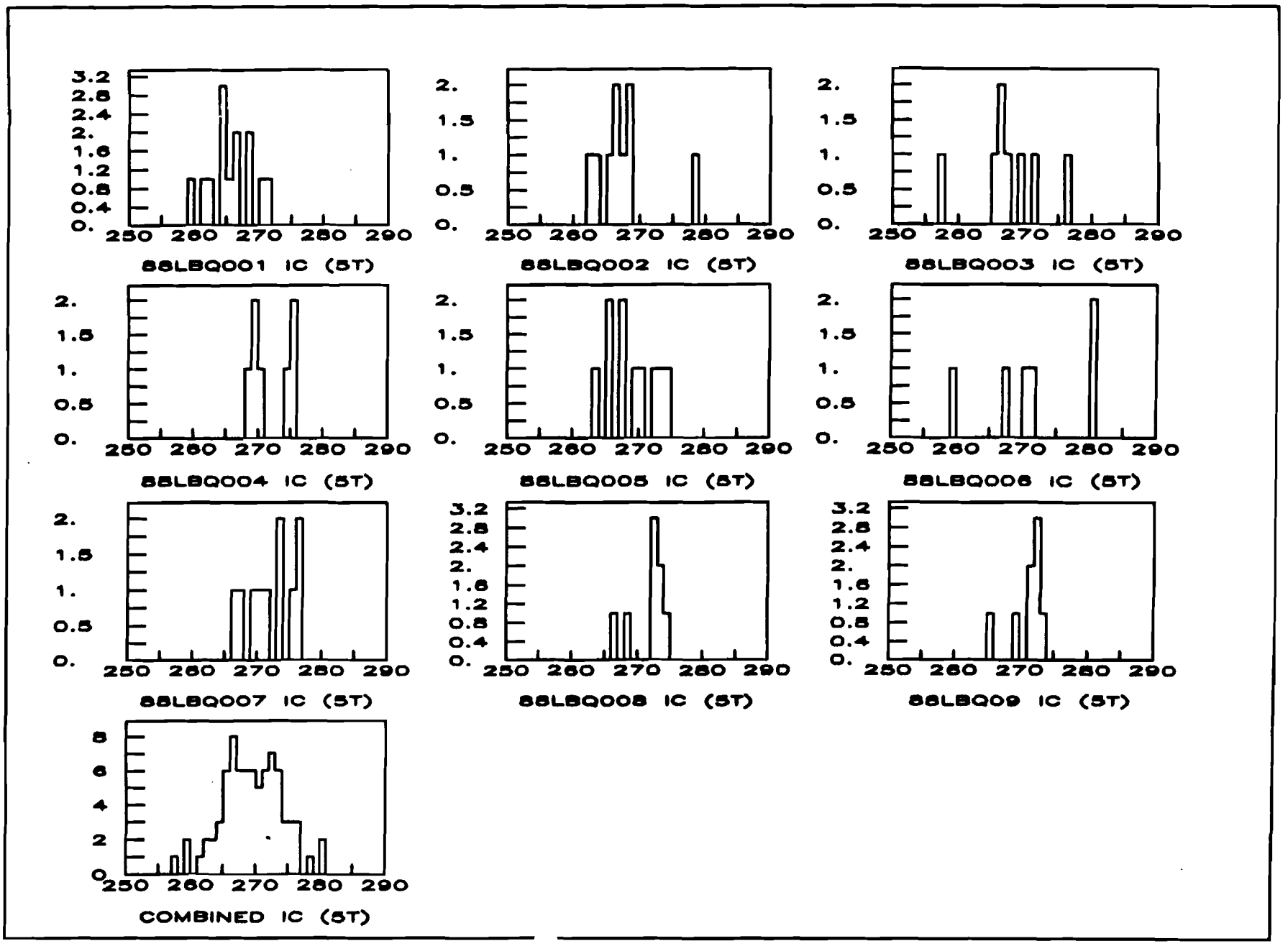

Figure 4.1.2-1 Quad Strand Critical Current Distributions

4.2.2 Quench Behavior

Several of the first 54" production magnets have had their quench properties measured in the Lab 2 dewar. The training data are shown in Figure 4.1.2-2. All three magnets reached a quench current plateau within 2% of the predicted performance based on cable short sample. Ramp rate dependence for these magnets and the required fixed target operation point are shown in Fig. 4.1.2-3. The data were extrapolated from 4.2 K to the expected operating temperature of 4.8 K.

* All strand and cable short sample data have been provided by Brookhaven National Laboratory.

Figure 4.1.2-2 2-Shell Quad Training Quenches

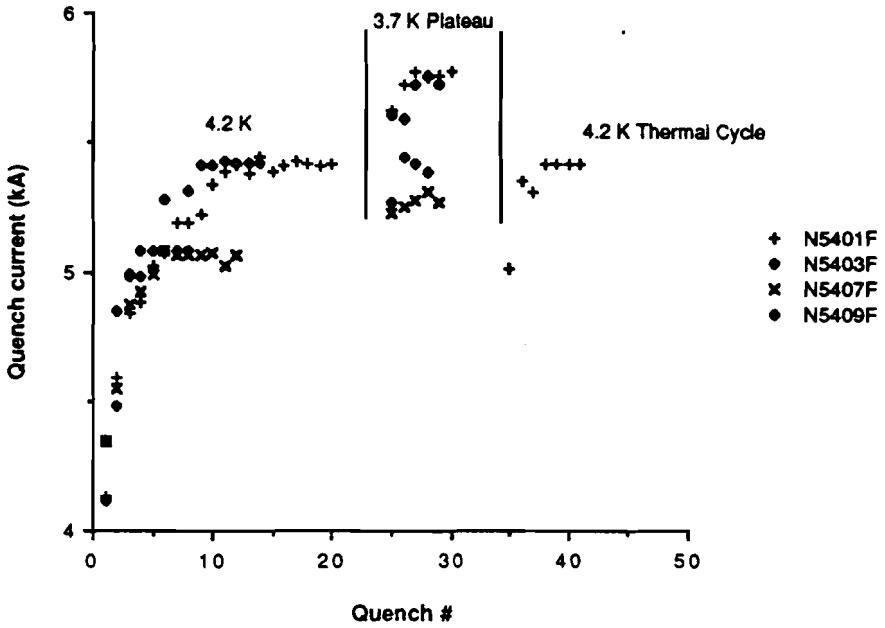

Figure 4.1.2-3 2-Shell Quad Ramp Rate Dependence

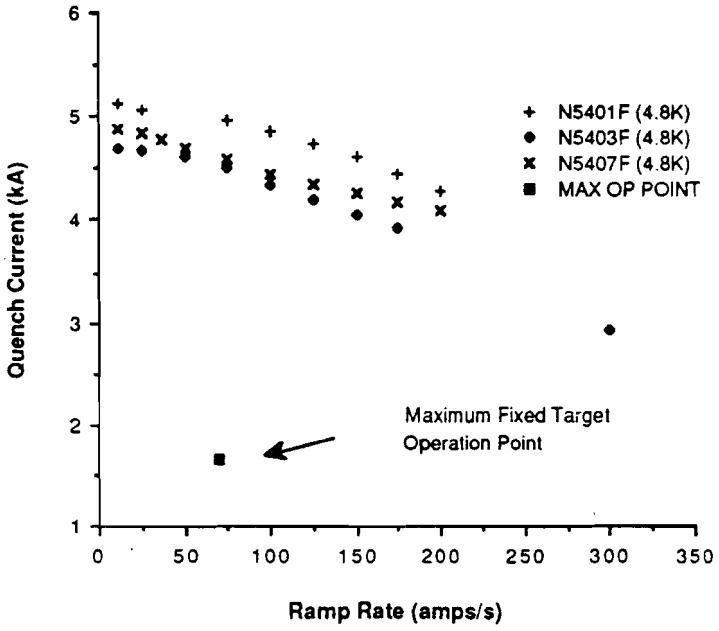

Appendix I

Low-Beta Mechanical and Cryogenic

Layout Diagrams Available on Request.

Please contact Steve Gourlay.