Fermilab FY 87

Direct Neutral Lepton Facility

Project Validation Review

March 1985

Rev. I

Cover Figure: A simulation of a tau-neutrino interaction in a bubble chamber photographed with holographic optics. The tau neutrino enters from the bottom (invisible) and produces many tracks, among them a tau meson (red) which decays into three charged particles (orange). Courtesy of Prof. William Bugg, University of Tennessee, and the Tohoku University Bubble Chamber Group.

TABLE OF CONTENTS

		Page
I.	Statement of Need	4
II.	Description and Philosophy	
	A. Introduction	8
	B. History of the Project	10
	C. Proton Beam Transport	12
	D. Primary Target and Experimental Hall	13
	E. Muon Spoiler System	15
III.	Utilities and Special Facilities	
	A. Beamline Magnets and Power Supplies	18
	B. Spoiler System Magnets	18
	C. Vacuum Systems	19
	D. Controls and Beeam Diagnostics	19
	E. LCW System	20
	F. Shielding and Radiation Safety	20
IV.	Civil Construction	
	A. Pre-target Enclosures	22
	B. Target Hall	23
	C. Shield Enclosure	23
Acknowledgements		25
References		26
Tables		28
Figure Captions		32
Figures		34
Schedule		53

Appendix I. Design of the Magnetized Muon Shield (TM-1155)

Appendix II. Justification for 900 GeV Redesign of Direct Neutral Lepton Facility (June, 1984)

Appendix III. General Recommendations of the Physics Advisory Committee (June, 1984).

Appendix IV. Schedule 44 for the Direct Neutral Lepton Facility (February, 1985).

Appendix V. Summary of the Direct Neutral Lepton Workshop (October, 1984).

Appendix VI. Radioactive Target Handling

Appendix VII. Cost Estimate

I. Statement of Need

The purpose of this project is to build a facility capable of doing a unique series of high energy physics experiments that cannot be carried out at any other high energy physics laboratory anywhere in the world. The energy parameters of the Tevatron, and the existence of several functional detector facilities in the Neutrino Area, make this project entirely feasible. The standard model predicts the existence of six quarks and six leptons. Five of the six quarks have been observed in the laboratory and preliminary evidence for the sixth quark (top) has recently been announced by the UA1 experimenters at CERN. Of the leptons, five have been observed in various experiments and the sixth one (tau-neutrino) remains unobserved. Recent advances in the standard model have predicted that at Tevatron energies it is possible to produce enough of these tau-neutrinos to be able to observe them interacting in bubble chambers equipped with holographic optics.

This facility will produce a beam of tau-neutrinos and direct them at several existing detector facilities enabling Fermilab experimenters to observe this missing component of the standard model. But it is impossible to detect this new particle in existing neutrino beams despite the high energy now available because the number produced is negligibly small compared to the number of ordinary neutrinos. This facility will increase the ratio of tau-neutrinos to ordinary neutrinos and increase the absolute number of tau-neutrinos entering the detector.

Presently, neutrinos are produced as tertiary beams (see Figure 1A). The primary proton beam is extracted from the Tevatron and directed toward a target. As the protons interact in the target many types of secondary particles are produced such as pions and kaons. The pions and kaons drift

through a large pipe which is nearly 1,500 feet long. As they move along, they decay into muons and mu-neutrinos. Because only neutrinos must enter the experimental detectors, the muons must be stopped by passing them through more than 2,000 feet of dirt and steel (see Figure 1A). The neutrinos pass through this obstruction easily and proceed toward the detectors. Tau-neutrinos are produced in the existing configuration, but the angles at which they are produced are so large, and the detectors are so far downstream, that nearly all of them miss the apparatus.

In the proposed facility, leptons will be produced "promptly" by the interaction of an intense beam of protons in the target, instead of the decays of pions and kaons. The ratio of tau-neutrinos to other neutrinos is increased by absorbing the source of ordinary neutrinos (long-lived mesons) immediately in a long, dense target. But the muons which result from the decays are not absorbed in the target, so an additional absorber must be added (see Figure 1B). If a passive beam absorber composed of earth and steel is used, it would have to be 2,000 feet long in order to absorb all the muons. Because of the large angle at which the "prompt" neutrinos are produced, and the distance of the detectors from the target, most of them would miss the detectors.

The only way to increase significantly the number of tau-neutrinos entering the detectors is to put the target close to the experimental apparatus (see Figure 1C). Following this scheme, five very large iron electromagnets will be installed to bend the unwanted charged muons away from the detectors, leaving only tau-neutrinos at the apparatus. As opposed to the <u>passive</u> beam dump of earth and steel, the <u>active</u> (magnetic) dump sweeps away unwanted particles and allows the detectors to be placed close enough to the

target so that the absolute number of tau-neutrinos reaching the apparatus is greatly increased.

The criterion which determines how much bending is necessary is the width of the existing detectors and the desired distance from the target. The bending power of the magnets must be strong enough to eliminate unwanted charged particle background yielding useful tau-neutrino event rates at the apparatus.

The timing of this project is contingent on the scheduled runs of the existing neutrino beams being completed in 1987. Operating this facility is not compatible with the scheduled runs of the existing neutrino beams. The detectors used with this facility will be operating in the already scheduled runs, and therefore will still be active and maintained in 1988.

This facility may also provide physics opportunities beyond the

would create a gap in the Fermilab neutrino physics program, and make it very difficult to reactivate the detectors and reassemble the scientific manpower necessary to perform the experiments.

II. Description and Philosophy

A. Introduction

The Direct Neutral Lepton Facility has been designed to provide a neutrino beam enriched in electron and τ (tau) type neutrinos ($\nu_e(\bar{\nu}_e)$ and $\nu_\tau(\bar{\nu}_\tau)$, compared to conventional neutrino beams which are predominantly composed of muon-type neutrinos ($\nu_\mu(\bar{\nu}_\mu)$). A neutrino beam with a significant flux of ν_e and ν_τ allows one to perform several important experiments including measurements of ν_e - electron scattering and the explicit observation of the ν_τ. A series of experiments have already been designed to exploit the beam. E-646[1] involves equipping the 15' bubble chamber with a high resolution holographic optical system; E-656[2] uses the fine grained neutrino calorimeter in Enclosure NCH (LAB C) and E-636[3] has built a new freon bubble chamber also equipped with a holographic optical system. E-635[4] uses a new detector to look for heavy neutrinos and axions.

The enrichment of the neutrino beam is achieved by forcing a primary proton beam, at the full energy of the Tevatron, to interact completely in a target block of tungsten or copper. The target is several feet long. Charmed particles, D's and F's, produced in the primary interactions have short life times and decay before re-interacting in the target; their decays produce neutrinos of all types. The neutrinos resulting from charmed particle decay are often called "prompt neutrinos". The pions and kaons produced, which are a source only of muon neutrinos, tend to re-interact in the target block before they have a chance to decay. The net effect is to produce a beam which is predicted to be 48% $\nu_e(\bar{\nu}_e)$, 51% $\nu_\mu(\bar{\nu}_\mu)$ and 1% $\nu_\tau(\bar{\nu}_\tau)$ at 100 GeV. This can be compared to a conventional broad-band neutrino beam which consists of 98% ν_μ, 2% ν_e, and 0.01% ν_τ. Figure 2 shows the flux of ν_e, ν_μ, and ν_τ expected at

the 15' Bubble Chamber[5], for the Direct Neutral Lepton Facility.

In order to exploit the prompt neutrino beam, the intense flux of muons inevitably associated with the beam must not be allowed to strike the experimental detectors. This problem is particularly acute since, to take full advantage of the flux of electron and tau neutrinos, the production target should be as close to the detectors as possible. To permit satisfactory operating conditions for the Bubble Chamber experiments, E-636 and E-646, the criterion has been set that fewer than 10 background muons pass through either Bubble Chamber per 10^{13} protons on the tungsten target.

The closeness of the target to the neutrino detectors precludes the usual technique of ranging out the muons produced in the target with a long steel absorber, and so a massive system of spoiler magnets has been designed to bend muons produced in the target away from the detectors. The primary proton transport has been designed to produce a minimum of losses either from scraping on magnet apertures or by interactions with residual gas in the beam pipe, because such losses can also produce a substantial flux of muons at the detectors.

The target for the prompt neutrino beam has been designed to accept 2.5 x 10^{13} protons at 1 TeV. The final section of the proton transport is designed for targeting at angles between 0 and 40 mRadians. The prompt neutrino beam will be available to the detectors presently in Enclosure NCF, NCG and NCH (Labs E, B, and C) and to detectors mounted in a new building upstream of Lab E, known as Enclosure NCE(Lab F). NCE houses a 1 meter bubble chamber which was constructed by the Japanese part of the E-636 collaboration and arrived at Fermilab in December, 1983.

B. History of the Project

This facility was first imagined around 1980. Based on a very preliminary design of solid iron spoiler magnets, the first two experiments, E-636 and E-646, were approved by the Physics Advisory Committee in 1980 and 1981. During 1981 and 1982, a lengthy and detailed analysis was carried out to determine the exact size and shape of the spoiler magnet system needed to sweep away all the muons produced by 1000 GeV protons. Three universities and Fermilab participated in the study. The design report resulting from this study is attached as Appendix I.[6]

The analysis demonstrated the need for air-core sweeping magnets following two small solid iron magnets, in order to prevent the creation of harmful backgrounds from the interactions of the muons in the iron. At that time, it appeared to be slightly more cost-effective to make the air-core magnets as a single, superconducting magnet as opposed to four conventional (warm copper coils) magnets.

During 1983 and 1984, the superconducting magnet coil was designed and the cost estimate for the entire project was refined by input from mechanical, electrical, and civil engineers. In May, 1984, an ad-hoc review panel, appointed by the Head of the Research Division, reviewed the engineering design of the superconducting coil, approved the design, but requested that the cost comparison between the superconducting and conventional versions be reexamined. Operating experience with the Tevatron was already indicating a considerably lower duty factor than was assumed in 1982, which would reduce the power costs for a conventional system. The panel also requested that the large load for cryogenic engineers to design, fabricate, conduct safety-reviews, and commission a large superconducting magnet be more

realistically taken into account.

At the same time, a suggestion was made that the cost saving resulting from reducing the design energy from 1000 GeV to 900 GeV be examined. This suggestion was prompted by the observation that the Tevatron might never be able to extract high-intensity beams above 900 GeV, as detailed in Appendix II. The ensuing redesign of the spoiler system and reanalysis of the muon sweeping power resulted in a 17% reduction of the cost estimate for the facility arising from the 10% energy reduction. Of even more importance was the fact that the new cost estimate, based on 1984 experience, indicated that the construction costs for the whole facility would be 5% lower for the conventional magnet option, that the annual operating costs for the competing options were approximately equal, and that the lead time was much shorter for the conventional magnet option. These facts, plus the overburden of the cryogenic engineering staff of Fermialb, led to a firm decision to proceed with the 900 GeV conventional magnet option. This report presents only that option.

In June, 1984, the Physics Advisory Committee reaffirmed its opinion that the physics priority of the prompt neutrino beam experiments was comparable with the best of other Tevatron experiments (see Appendix III). However, the committee recommended another year's delay if the equipment funding to Fermilab did not increase.

In September, 1984, a Schedule 44 was written for the project and submitted to the DOE in February, 1985 (see Appendix IV). In October, 1984, a one-day workshop on the facility was held at Fermilab attended by 100 experimental and theoretical physicists[7]. The conclusion of the workshop was that there is even more interest in the physics potential of this facility

than there was in 1982, as summarized in a letter to the Director of Fermilab (see Appendix V).

C. Proton Beam Transport

Figure 3 shows a layout of the primary proton transport system from extraction to the prompt neutrino target. The beam uses existing enclosures and pipe as far as enclosure NE8. From that point downstream, it is all new construction. Calculations of the muon flux at the two bubble chambers from interactions of the primary proton beam along its transport system indicate that losses of up to 0.01% can be tolerated upstream of NE8[6]. However, in NE8 and downstream, beam losses must be restricted to one part in 10^7. These loss rates determine the beam size and the vacuum requirements.

A cost comparison between building the beam transport with conventional magnets, as opposed to superconducting magnets, showed that a conventional system is considerably cheaper both to build and to operate[8]. The capital cost is lower because some of the conventional magnets are available; the operating costs are lower partly because the beamline will transport fast spill beam (~ 1 millisecond resonant extraction) and will therefore operate at full power for only a few seconds each Tevatron cycle (even with several pings). Another costly feature of a cryogenic option which has been eliminated is the need to install several thousand feet of transfer line.

As the proton beam passes through the Switchyard, its size is increased(1) by travsersing 8 vacuum windows made of 0.003 inches of titanium, and (2) by interaction of 1% of the beam on the extraction septa. Of this 1%, some 20% scatters elastically with essentially the same energy as the primary beam. These elastically scattered protons dominate the tails of the angular distribution of the beam. This tail contains about 1 part in 10^4 of the beam

and would produce unacceptably high losses if allowed to propagate as far downstream as enclosure NE8. To prevent this, primary collimators set at ~ 0.1 mRadians are positioned in enclosure G2 and NW1 where the beam is still 1.5 km from the detectors.

Beyond this point, the transport has been designed to meet two constraints: 1) the beam does not aim directly at the detectors (except just upstream of the target), 2) beam passes through all magnet apertures with a total beam size at least twice as small as the aperture. The beam has a large spot size at the target to reduce the effects of rapid heating in the target material.

To prevent the beam from pointing directly at the detectors as it is bent in Enclosure NE8, the dipoles are arranged to bend the beam up and then down as the beam is bent west. This half 'cork-screw' keeps the beam at an angle of at least 5 mRadians from the 15 ft Bubble Chamber.

The design of enclosure NPA (Prompt Target Hall) allows the proton beam to be targetted at angles of 0, 20, or 40 mRadians. A change in the targeting angle involves switching the beam into a different beam pipe connecting NE8 and NPA (see Figure 3) and moving the magnets in NPA laterally a distance of up to 9 feet (see Figure 4). Changing target angles will not be done frequently.

D. Primary Target and Experimental Hall

The Prompt neutrino target is designed to accept proton intensities of up to 2.5×10^{13} in a millisecond spill. Successful operation of such a target involves solving two major problems. The first is the problem of dumping ~ 2 Megajoules of energy, (50% of the beam energy) in the target material without local cracking or melting. The second is the handling of the highly

radioactive target material in case it needs to be repaired or removed from Prompt Hall. These problems will be treated in turn.

Figure 5 shows the peak energy deposited per gram in tungsten by 1 TeV protons as predicted by the monte-carlo program CASIM[9] for beams of various sizes. The two solid curves refer to the scale on the right and show the maximum number of 1 TeV protons that can be targetted while keeping the energy deposition below 200 Joules/gram (upper curve) and 100 Joules/gram (lower curve). It is generally considered[10] that metallic materials can absorb 100 Joules/gram without suffering internal damage. In tungsten, such an energy deposition produces a temperature rise of ~ 750^0c, keeping the material well below its melting point.

To keep the energy deposition below 100 Joules/gram requires a full-width beam-size[11] (at the target) of at least 4.3 inches. The beam has been designed to be capable of producing a spot size of 7 inches, which easily satisfies the above criterion. The problem of energy deposition in copper is much less severe than in tungsten.

In order to allow experiments to separate the effects of prompt neutrinos and neutrinos from the π and K decays, targets are planned at full and 1/3 density. A list of targets and their sizes is given in Table 1. Changing between full and 1/3 density can be accomplished with the tungsten or copper target in a matter of minutes; the changeover between full and 1/3 density beryllium would be a complex procedure requiring several days. For the initial installation, only the copper and tungsten target will be bought.

Based on measurements made on the E-612 target[12], the radiation level at the upstream face of the Prompt target will be 25000 Rads/hour after an exposure of 10^{16} 1 TeV protons. A one week cool down will reduce this to 5000

Rads/hr. which still presents a formidable handling problem. The target will be placed in a 'coffin' of steel with 12" thick walls for all handling. Figure 6 shows a cross-section of the target housing and Appendix VI describes the remote handling procedures used to remove the target and place it in its 'coffin'. Radiation levels outside the coffin will be lower than 100 mrem/hour.

The Prompt Hall serves two functions; it contains the final string of magnets which transport the proton beam to the target, and it contains the target. To allow the proton beam to be targetted at both 0 mRadians and 40 mRadians requires the upstream section to be at least 12 ft. wide (see Figure 4). The downstream section of the hall contains the target system and the rails used for target installation and removal. Figure 7 shows a plan view of Enclosure NPA (Prompt Hall) and the railway which is used to service the prompt target.

E. Muon Spoiler System (Active Shield)

The muon spoiler system is designed to sweep the intense flux of muons associated with the prompt neutrino beam away from the neutrino detectors. It is the subject of a lengthy and detailed report (Appendix I), of which only a summary and update are given here.

The spoiler system must reduce the muon flux at the 15' Bubble Chamber to less than 10 muons per 10^{13} protons on the target. To calculate this flux, monte-carlo programs have been written which consider muons from direct production (charm decay), muon production by π and k decay, and from muon-trident production. Muons are propagated through the spoiler system using detailed field maps of the proposed spoiler magnets, and including the effects of energy loss, multiple, plural and single Coulomb scattering, and

deep inelastic muon scattering. Three completely independent programs, each with its own treatment of these physical processes and its own monte-carlo techniques, have been written by the proponents of E-636[3], E-646[1] and E656[2]. Their predictions for the muon flux at the 15' Bubble Chamber agree to better than a factor of 2, which is quite satisfactory considering that the overall rejection being calculated is about 10^9. The programs have also been tested using data on muon backgrounds measured by E-613. The predicted and measured fluxes agree well, typically to better than 50%. More details on all of the above can be found in Appendix I.

In the design study of 1982 (see Appendix I), an acceptable solution was found for 1000 GeV protons consisting of two solid-iron electromagnets and four air-core C-magnets. In the redesign for 900 GeV incident protons during the summer of 1984, it was found that simply omitting the fourth air-core C-magnet gave an acceptable 900 GeV solution, that is, less than 10 muons at the 15' Bubble Chamber per 10^{13} protons on the target. This solution was analyzed by one of the three monte-carlo programs (E-636), and the results were presented at the Direct Neutral Lepton Workshop in October, 1984[13]. This constitutes a solution. However, the spoiler system should be reoptimized for 900 GeV in order to minimize the magnet costs. The proposed spoiler system is shown in Figures 8 through 13. The system has a total field integral ($\int Bdl$) of 54 Tesla-Meters, giving a P_T kick of 16 GeV/c. The magnetic field is horizontal and the muons are swept vertically into the ground and into the sky (see Section IIF). The first two magnets are conventional iron magnets with a central field of 2 Tesla and an overall $\int Bdl$ of 18 Tesla-Meters. Apart from their function as magnets, they also serve to shield the experiments and

personnel from strongly interacting particles produced in the target, most especially neutrons (see Section III.F).

The C-magnets each have a central field of 2 Tesla and total 18 meters in length. The gaps between the pole tips gradually increase in order to match the width of the muon cone. As stated previously, these magnets must be air-gap magnets in order to prevent trident production and deep inelastic scattering by the muons. An important feature of the design is that the iron yoke which carries the major part of the return field and which would tend to bend particles back towards the detector is withdrawn several meters from the gap.

III. Utilities and Special Facilities

A. Beamline Magnets and Power Supplies

Conventional magnets for the primary beam transport in Enclosure NPA are listed in Table 2. Table 3 describes magnet positions and the location of the associated power supplies. The magnets and power supplies used in enclosures upstream of (and including) NE8 are either in place in the NE line or are temporarily in use in the NT line. Costs are included for relocating some of these magnets.

B. Spoiler System Magnets

These five magnets are shown in Figures 8-13. Relevant magnet parameters are shown in Table 4. If all these magnets are operated DC, the power consumption totals 3.7 Mwatts. Therefore, the three air-core C-magnets will be ramped from low current to full current once per minute. Using this scheme, the average pulsed power is reduced to about 1.25 Mwatts. In addition, the ramp up from low current will be automatically inhibited whenever there is no beam injected into the Tevatron, which will probably reduce the power consumption another 30%.

In 1982 (see Appendix I), it was planned to supply this power with existing, over-hauled power supplies. Since this plan may no longer be feasible, the cost estimate includes new power supplies.

In order to target the beam at angles between 0 and 40 mRadians, the air-core magnets must be mounted on Hillman rollers and pivot about the target point (see Figure 14). This motion will not be done very often (perhaps once in two years). The first two magnets are wide enough to accommodate both 0 and 40 mRadian targeting angles. Because of shielding constraints, magnet M2 is permanently buried under the berm. If problems should arise with the coil,

a procedure for removing it for repair already exists. This removal procedure has been created for use in the new Muon Beam quadrupole enclosures. The coil design will be very conservative to reduce the possibility of such repairs.

C. Vacuum System

The vacuum requirements for the primary proton transport were determined by considering the muon flux which results from beam interactions with the residual gas in the beam pipe at the 15' and 1 meter Bubble Chambers. Upstream of enclosure NE8, the vacuum must be 0.1 micron; downstream of NE8, where the beam points more closely at the detectors, a vacuum of 0.03 microns has been specified. A distributed system of roughing and turbo-molecular pumps has been designed to provide the vacuum. The vacuum system through Enclosure NW4 is being completed as an ongoing effort to improve the NE beamline. The remainder of the system is shown in Figure 15. The beamline has no vacuum windows between G-2 and the target. It is equipped with gate valves to allow sections of the line to be isolated and repaired without disturbing the vacuum in the rest of the line.

D. Controls and Beam Diagnostics

The most critical feature of the primary proton transport to the target is that the beam be delivered as cleanly as possible to the target. A set of segmented wire ion chambers will be distributed along the beamline to determine the beam position and profiles. These chambers will be used to establish the initial beam tune, but will be removed from the beam during data taking because muon background is produced when the beam interacts in the chamber. To monitor the beam during data taking, a set of the Doubler/Saver Beam Position Monitors[14] will be used. These devices are non-obtrusive devices placed out of the beam path and can monitor the position of the beam

centroid with a precision of better than 0.5 mm which is quite adequate. "Paint-Can" loss monitors (tubes of liquid scintillator viewed by a low gain photo-multiplier tube) will be used to monitor beam losses. These devices have good linearity and can detect beam losses of a few x 10^5 particles. They will be read with standard charge digitizers[15]. The total beam intensity will be measured with an R.F. cavity. Table 5 gives a list of the new beam monitors required and their locations along the beamline. Monitors which already exist in the test beam have been omitted.

E. LCW System

The LCW requirements for the entire proton transport target system and spoiler magnets are satisfied by the present pumping station at NS4.

F. Shielding and Radiation Safety

The transport of primary proton beams at intensities of 10^{13} protons per pulse requires earth shielding 14 ft thick to meet the standard Fermilab radiation levels for fenced areas. The beamline has been covered with earth to this thickness as far as Enclosure NE8.

The neutron flux produced at the target has been considered from three aspects:

1. Personnel protection on and at the side of the berm adjacent to the dump and downstream of the magnets following the dump.

2. Radioactivation of the ground water in the soil surrounding the dump.

3. Excessive bubble formation in both the 1 meter and 15 ft bubble chamber downstream of the dump.

The neutron flux from the dump, with various designs of shielding, has been evaluated using CASIM. A typical result is given in the elevation view of the

dump shown in Figure 16. Contour plots of equal star density are shown in the shielding around the dump. The earth shield is designed to match the contour of 10^{-16} stars/ cm^3 /proton. This produces 0.0015 mRem/hour for personnel on the berm, which is acceptably low.

To control soil activation, around the target, adequate iron shielding is placed below and around the concrete enclosure of the dump.

At the 15 ft Bubble Chamber the neutron flux will be about 20 per meter which is an acceptably low bubble background. The corresponding neutron flux in the 1 meter chamber at 58 meters from the dump will be 300 per $meter^2$. Given the small size of the chamber this flux will also produce a tolerably low bubble rate.

The radiation levels expected from muons in enclosure NCE (Lab F) in the region of the 1 meter Bubble chamber are shown in Figure 17. The platform above the chamber will be inaccesible when the beam is on; the radiation levels in the rooms on the west will be low enough to allow continuous occupancy.

IV. Civil Construction

The primary beamline uses existing enclosures through Enclosure NE8. What remains to be constructed is 1) stainless steel beam pipes and an earth berm connecting NE8 and the pretarget hall; 2) a pretarget hall to house the final beamline magnets; 3) a target hall housing the target and the first two spoiler magnets; 4) a shield enclosure to house the three air-gap C-magnets with an attached service building.

A. Pretarget Construction

Stainless steel beam pipes must connect the end of Enclosure NE8 and the beginning of Enclosure NPA, a distance of 880 feet. These pipes are shown as one solid line and two dotted lines on Figure 3. The first 300 feet of pipe is a single 14" diameter pipe, followed by 580 feet of three separate 6" diameter pipes. These three pipes are used alternately for the 0,20, and 40 mRadian targeting angles, as mentioned in Section IIC. From the junction of the 24" and 6" pipes, a vacuum tee goes 25 feet to a pumping station in Enclosure NWA.

About 620 feet of earth berm, 20' deep, must be removed to place these pipes, and the full 880 feet must be reburied to the same height.

A pretarget beamline enclosure, of dimensions 290' x 11' x 8' will be built to house the pretarget beamline elements (see Figure 7). Its width of 11 feet is determined by the need to move the beamline elements up to 9 feet laterally to switch from the 0 mRadian to the 40 mRadian configuration, as shown in Figure 4. The enclosure has an upstream emergency-exit labyrinth which connects to a small instrumentation annex. The enclosure joins the target hall at the downstream end. Power and water connections join it to Enclosure NEB about 30 feet to the East. The entire enclosure must be covered

with 14 feet of earth berm for radiation shielding (see Figure 18).

At the downstream end, the pretarget enclosure is joined by a rail system tunnel and dock for the handling of radioactive targets and bedplates, as described in Appendix VI.

B. Target Hall

The target hall is 100 feet long by 23 feet wide and consists of three sections, each of which goes slightly deeper into the ground than the previous section (see Figure 14). The first part (section DD, Figure 6) is used for target handling from the transporter on the rail system to the target box itself. The second part (sections CC, BB, and AA, Figure 6) contains the targets and the first muon spoiler magnet, M1. These first two parts of the hall are both covered by a 5-ton crane for use in target handling and for possible extraction of the M1 magnet coils, should they fail. The targets are surrounded by a steel pile for radioactive shielding.

The third section of the target hall contains the second spoiler magnet, M2. Both magnets and the target pile will be initially installed with an outside crane before the roof and walls are poured. The target hall must be covered with a 22 foot earth berm for additional radioactive shielding (see Figure 19). This berm gradually tapers down to a thickness of about 6 feet at a retaining wall at the end of the target hall, as shown in Figure 14.

Because the weight per square foot of each of the spoiler magnets exceeds the expected strength of the glacial til, foundation supports with caissons to bedrock have been planned for each of the magnets. These foundation supports constitute a large fraction of the civil construction costs.

C. Shield Enclosure

The shield enclosure, so named because it houses the "active muon shield", is 76 feet long, 29 feet wide, and has three sections of gradually increasing depth below grade (see Figure 14). The last section is 24 feet below grade. A service building annex of the same above-ground height and same length has been sized with a width of 15 feet so as to contain all the power supplies and controls for the five spoiler magnets and two of the quadrupole strings in the pretarget enclosure. This building will also house target box monitoring instrumentation. Two new 1500 KVA power substations will be placed near this annex to power the magnets.

No crane is planned for this building, as these magnets will also be built with an outside crane before the roof and walls are built. If later removal of any of the coils is necessary, roof sections will be removed. There is no earth berm required above this building.

Acknowledgements

This document draws on the work of many people spread over several years. However, special thanks for extra effort in preparing this specific document are extended to Mark Bodnarczuk, Fred Browning, Lou Kula, Pat Mascione, and Ray Stefanski. Overall responsibility for the accuracy of the document is taken by Thornton Murphy.

References

1. Experiment E-646, Spokesperson C. Baltay: Search for the ν_e and $\bar{\nu}_e$ Interactions.
2. Proposal P-656, Spokesperson S. Whitaker: Study of Neutrio Interactions from a Beam Dump.
3. Experiment E-656, Spokesperson I. Pless: Neutrino Interaction Studies at Tevatron Energies.
4. Experiment E-635, Spokesperson L. Mo: Search for Axion-like Particles.
5. A. Malensek and J. Morfin, Prompt Lepton Production from High-Energy Beam Dumps, Fermilab TM-1275 (1985).
6. C. Baltay et al., The Design of the Magnetized Muon Shield for the Prompt Neutrino Facility, Fermilab TM-1155 (1982).
7. Copies of Transparencies of the Direct Neutral Lepton Facility Workshop, October 12, 1984, Fermilab Users Office (1984).
8. Internal memo to prompt neutrino file, September 23, 1981.
9. A. Van Ginneken and M. Awschalom, High Energy Particle Interactions in Large Targets, Fermilab (1975). We are indebted to C. Hojvat for producing this curve.
10. C. Hojvat, private communication.
11. The "full width" used here and in Figure 5 is 4.72 times the value of the parameter σ in the Gaussian model used for beam shapes. In our experience, this definition of "full width" includes all of the beam except the long, rather flat, tails (which are to be removed by collimators very early in the beam line).

12. Memo to Meson Department Head from the Meson Radiation Safety Officer, March 24, 1981.

13. S. Oh, ref. 7, p. 12-1.

14. R. E. Shafer *et al.*, RF Position Detector, *IEEE Trans. Nuc. Sci. 28*, 2290 (1980).

15. A. E. Donaldson, A Charge Digitizer, Fermilab TM-274 (1970).

Table 1

Proposed Targets for the Direct Neutral Lepton Facility

Material	Full Density Length ft.	1/3 Density Length ft.	Diameter Inches
Copper	3' 4"	10' 0"	11"
Tungsten	2' 4"	7' 0"	8"
Beryllium	6' 0"	18' 0"	22"

Table 2

Magnets for Primary Beamline Transport System in Enclosure NPA

Magnet Type	Total # Required	New
5-1.5-240 (B1)	4	4
4-2-240 (B2)	4	0
3Q120	2	0
3Q84	6	4
6-3-120	1	1

Table 3

Magnets and Power Supplies by Location

Magnets	Power Supply	P.S. Location	Number of New Supplies
4 x 4-2-240	2 x 500-5	NEB	0
4 x 5-1.5-240	2 x 500-5	NEB	0
2 x 3Q120	1 x 55-0.1	Shield Annex	1
6 x 3Q84	2 x 500-5	Shield Annex	1
1 x 6-3-120	1 x 240-1.2	NEB	0

Power Supplies are defined by their power in kilowatts and current in kiloamps eg (10-0.25) is a 10 kilowatt supply with a maximum current of 250 Amps.

Table 4

Magnet and Coil Parameters,

Spoiler Magnets

$.1 \times \frac{10,000}{20}$ 50

Magnet	M1	M2	M3	M4	M5
kNI per half	25	25	348	445	488
Coil size (cm - horizontal x cm - vertical)	25 x 15	25 x 15	45 x 20	40 x 30	37 x 40
N per half	15	15	36	46	52
I (A)	1667	1667	9667	9667	9375
L (H)	0.091	0.179	0.067	0.133	0.134
R (Ω)	0.0027	0.0036	0.0125	0.0152	0.0121
τ = L/R (S)	33.7	50.0	5.36	8.75	11.07
J_{cond} (A/cm^2)	93	93	515	492	440
PDC (kW)	7.5	10.0	1170	1419	1065
Pulsed power (kW)			396	480	360
Stored energy (MJ)			3.1	6.2	5.8
Conductor weight (short tons)	5.5	7.3	23.0	30.7	34.0
Iron weight (short tons)	430	750	1010	1823	1933

Table 5

List of Monitoring Devices for Proton Beam Transport

more loss mons

Location	Device
NW1	
	2 Beam Position Monitors
	2 Loss Monitors
NW4	
	1 Beam Position Monitor
	1 Loss Monitor
NE8	
	2 Beam Position Monitors
	2 Loss Monitors
NPA	2 1 mm Vacuum Swics
	1 2 mm Vacuum Swics
	2 Beam Position Monitors
	1 R.F. Cavity
	3 Loss Monitors
	2 Large Beam Position Monitors

Figure Captions

1. Thumbnail sketch of three kinds of neutrino beams.
2. Expected neutrino fluxes at the 15' Bubble Chamber from a seven-interaction-length copper beam dump, from ref. 5.
3. A schematic drawing of the primary proton beamline. The lateral scale is greatly magnified.
4. Schematic drawing of the beamline elements in Enclosure NPA, showing them in two configurations: (a) for 0 mRadian production angle (upper positions): (b) 40 mRadian production angle (lower positions).
5. Energy deposition for 1000 GeV protons in tungsten as a function of beam size. The "data points" are from the Monte Carlo program CASIM. The solid curves give the maximum number of protons allowed if one takes the maximum allowed energy density to be: (a) 200 J/gm; (b) 100 J/gm. For 900 GeV protons, these solid curves can be multiplied by 1.08.
6. A plan view of the target box and the first muon spoiler magnet, with four cross sections.
7. Plan view of the pre-target beamline enclosure and the target hall. The magnets are shown in the position for 20 mRadian production angle.
8. Plan and elevation views of the entire muon spoiler magnet system.

9.-13. Cross sections of each of the five muon spoiler magnets.

14. Plan and elevation view of the target hall and shield enclosure.
15. Schematic of the vacuum system.
16. Isodose curves for the beam-on radiation levels in the earth berm above the target hall. The curves are the result of the Monte Carlo program CASIM (ref. 9).

17. Radiation levels arising from muons in Lab F at the 1-meter bubble chamber. These curves are the result of the E-636 Monte Carlo program used to study the muon spoiler magnet system.
18. Cross section of the earth berm and the pre-target hall at the middle of the pretarget hall.
19. Cross section of the earth berm and the target hall at the target.

LEPTON PRODUCTION

EXISTING NEUTRINO

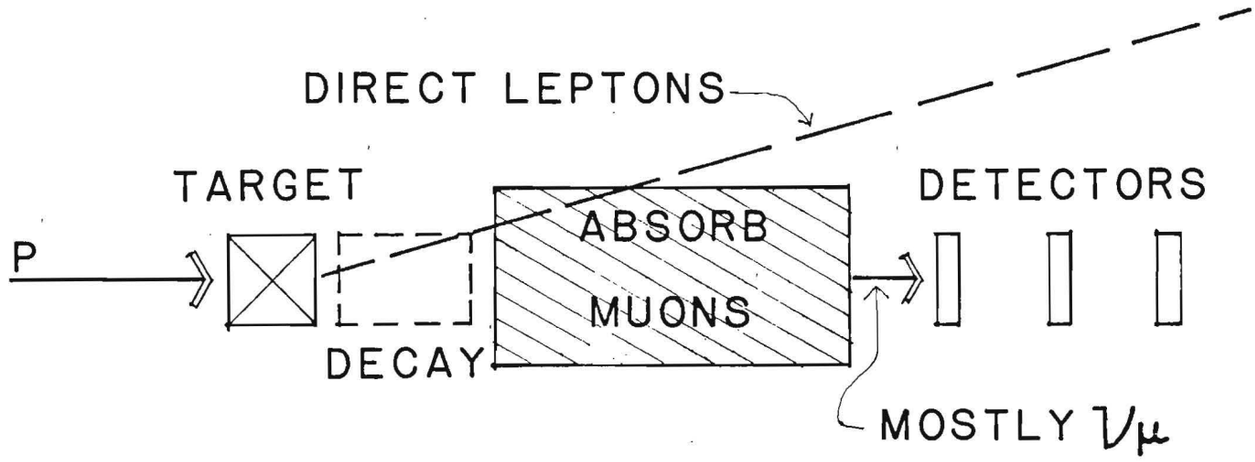

PASSIVE BEAM DUMP

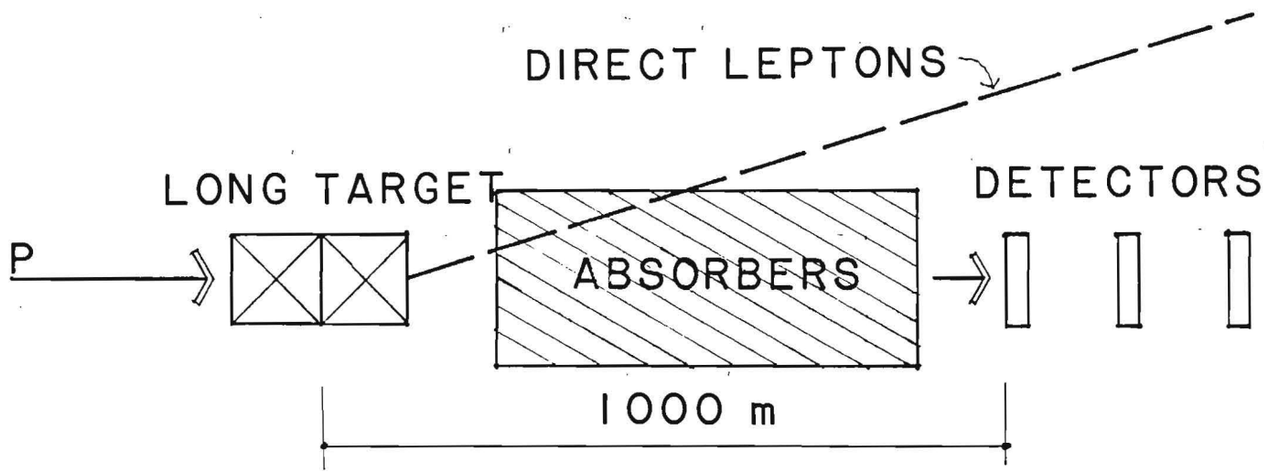

ACTIVE BEAM DUMP

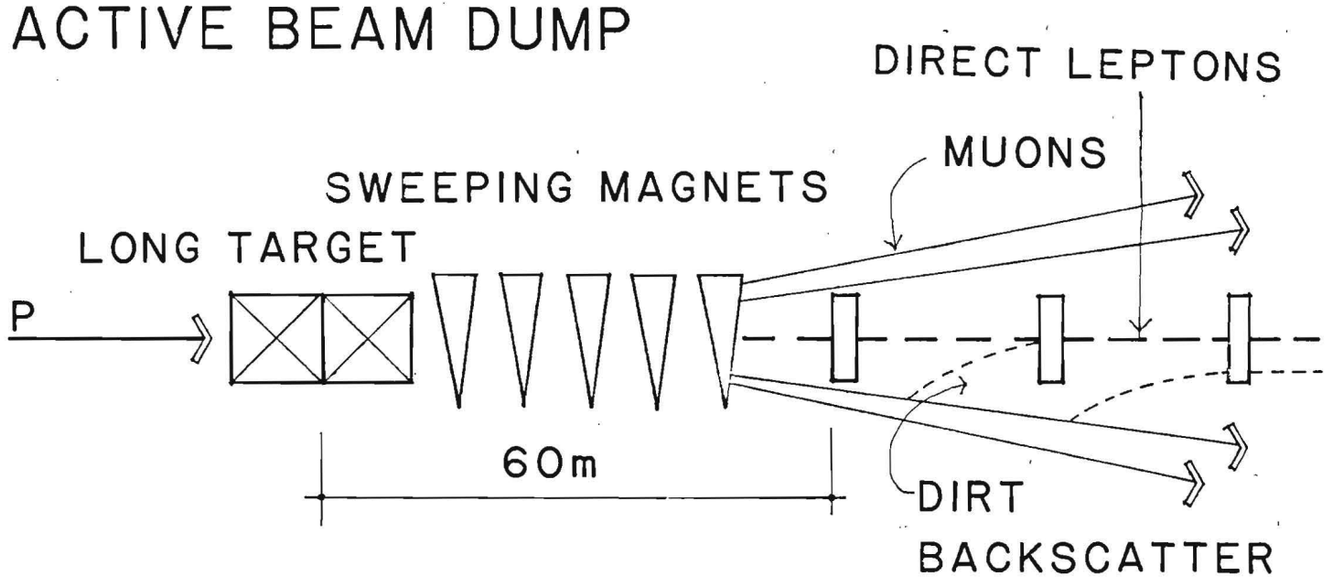

Figure 1

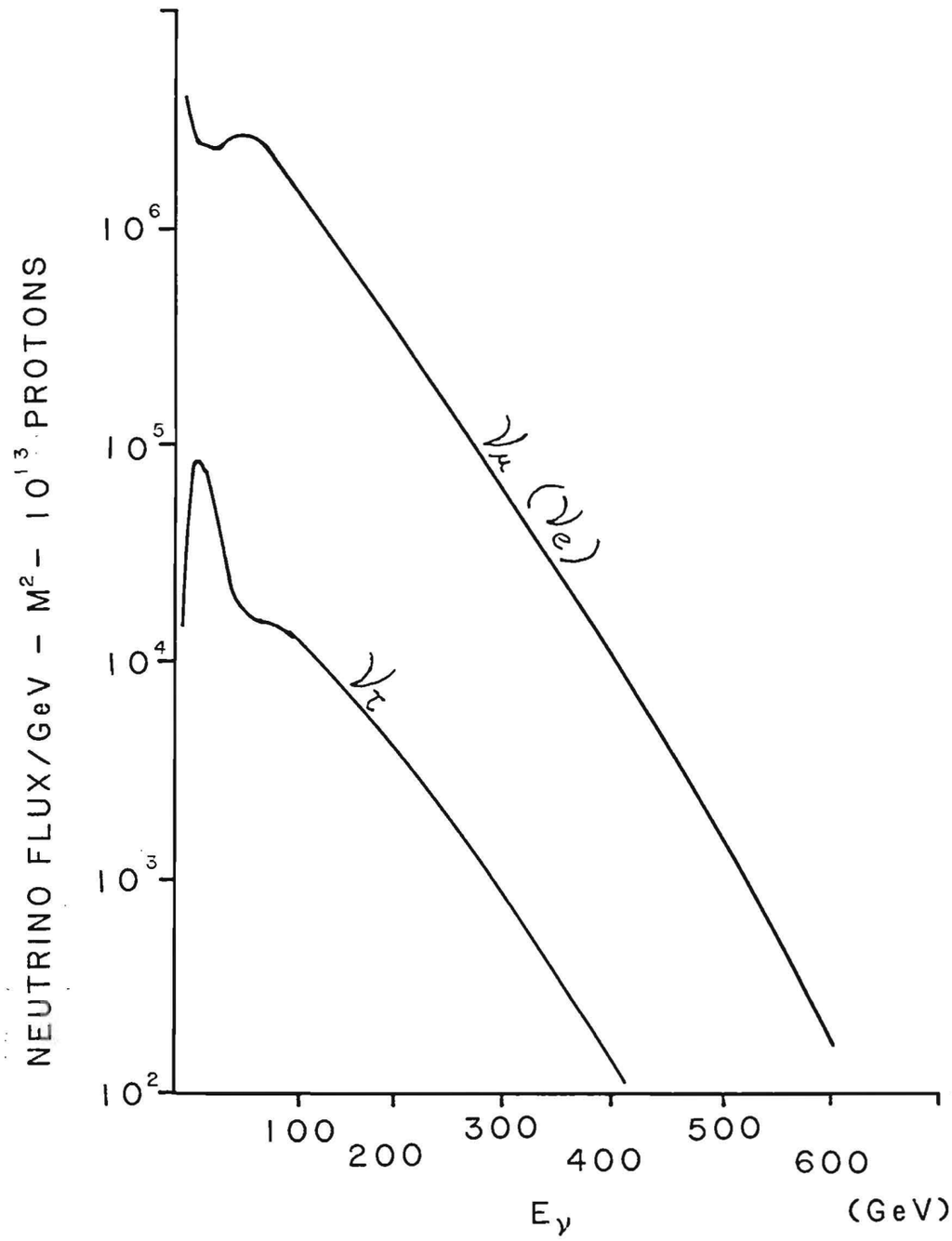
NEUTRINO FLUX/GeV - M² - 10¹³ PROTONS
10⁶
10⁵
10⁴
10³
10²
100
200
300
400
500
600
Eν
(GeV)
νμ (νe)
ντ

Figure 2

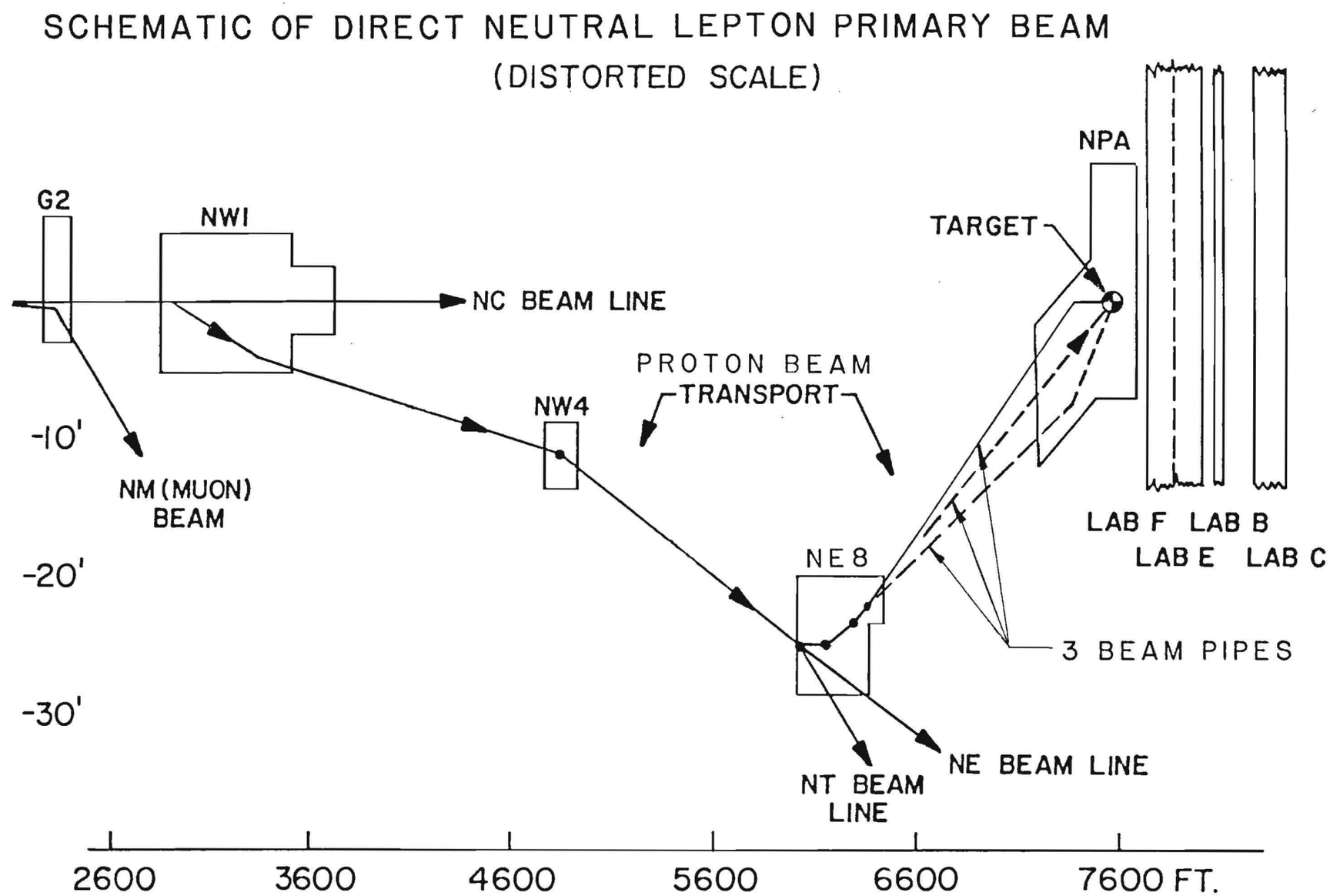
SCHEMATIC OF DIRECT NEUTRAL LEPTON PRIMARY BEAM
(DISTORTED SCALE)
G2
NW1
NC BEAM LINE
NPA
TARGET
PROTON BEAM
TRANSPORT
NW4
-10'
NM (MUON)
BEAM
-20'
NE8
LAB F
LAB B
LAB E
LAB C
3 BEAM PIPES
-30'
NT BEAM
LINE
NE BEAM LINE
2600
3600
4600
5600
6600
7600 FT.

Figure 3

MAGNET ARRANGEMENT IN ENCLOSURE NPA FOR "0" & "40" MILLIRADIAN TARGETING

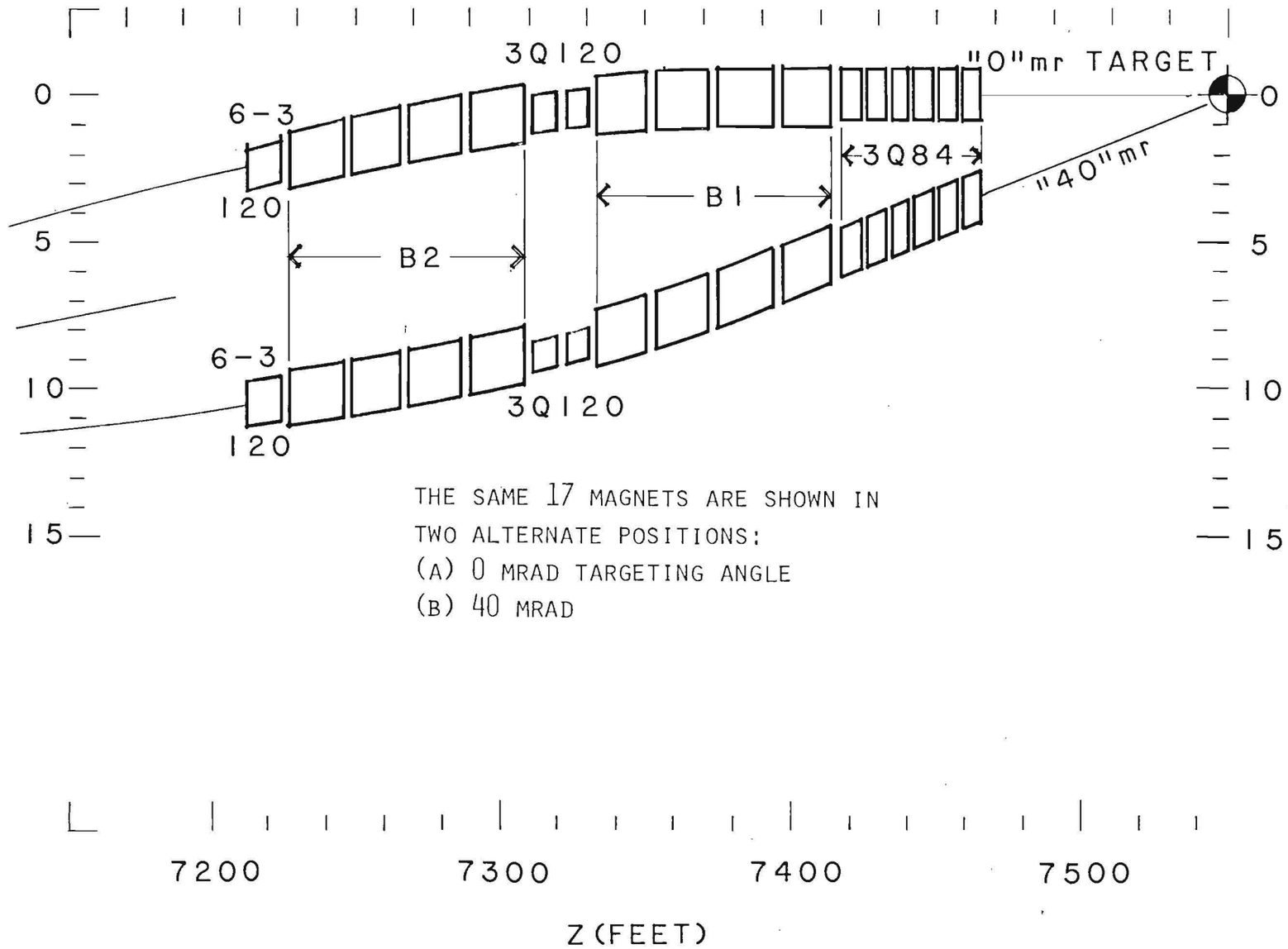

THE SAME 17 MAGNETS ARE SHOWN IN TWO ALTERNATE POSITIONS:
(A) 0 MRAD TARGETING ANGLE
(B) 40 MRAD

Figure 4

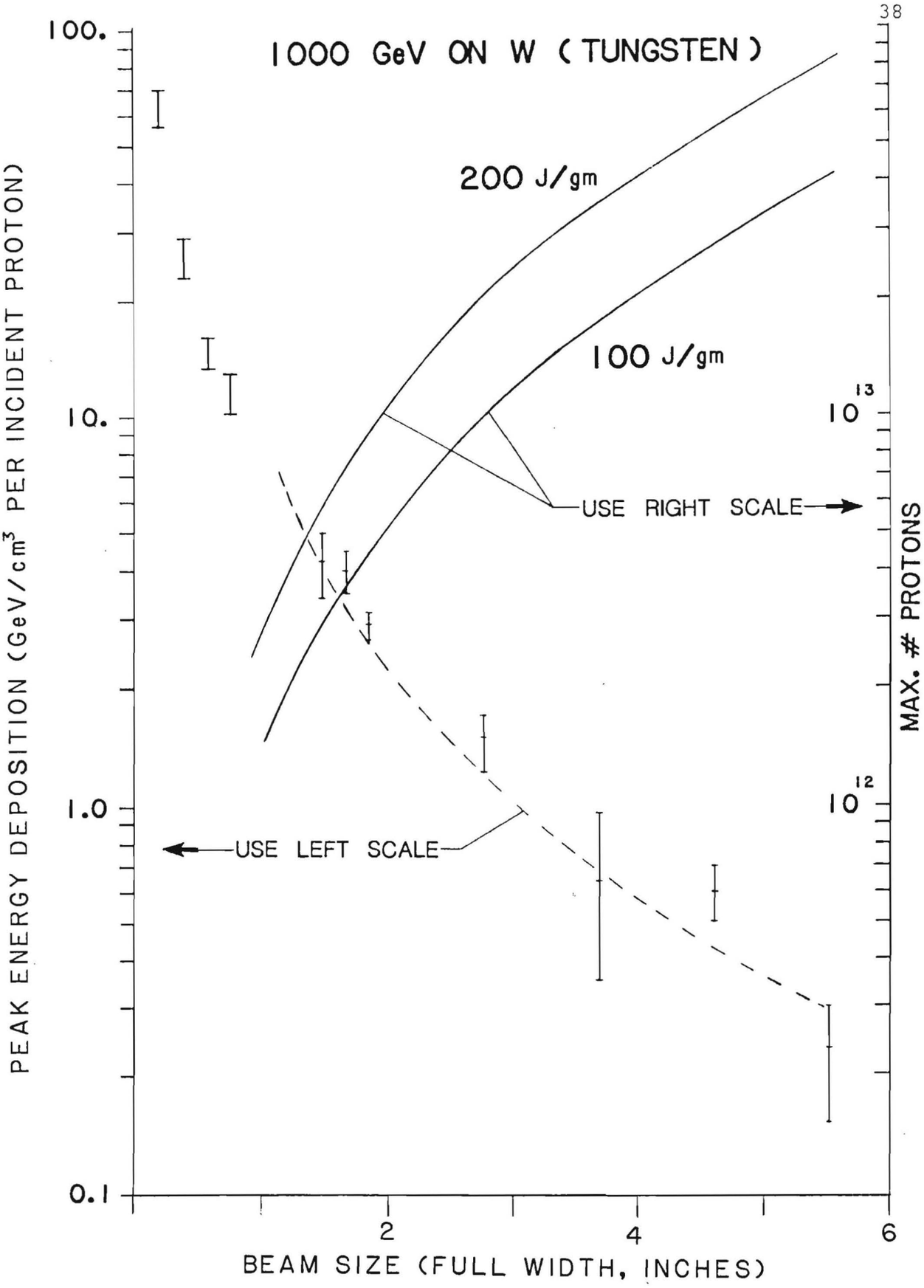
1000 GeV ON W (TUNGSTEN)
200 J/gm
100 J/gm
USE RIGHT SCALE
USE LEFT SCALE
PEAK ENERGY DEPOSITION (GeV/cm³ PER INCIDENT PROTON)
MAX. # PROTONS
BEAM SIZE (FULL WIDTH, INCHES)
100.
10.
1.0
0.1
2
4
6
10¹³
10¹²

Figure 5

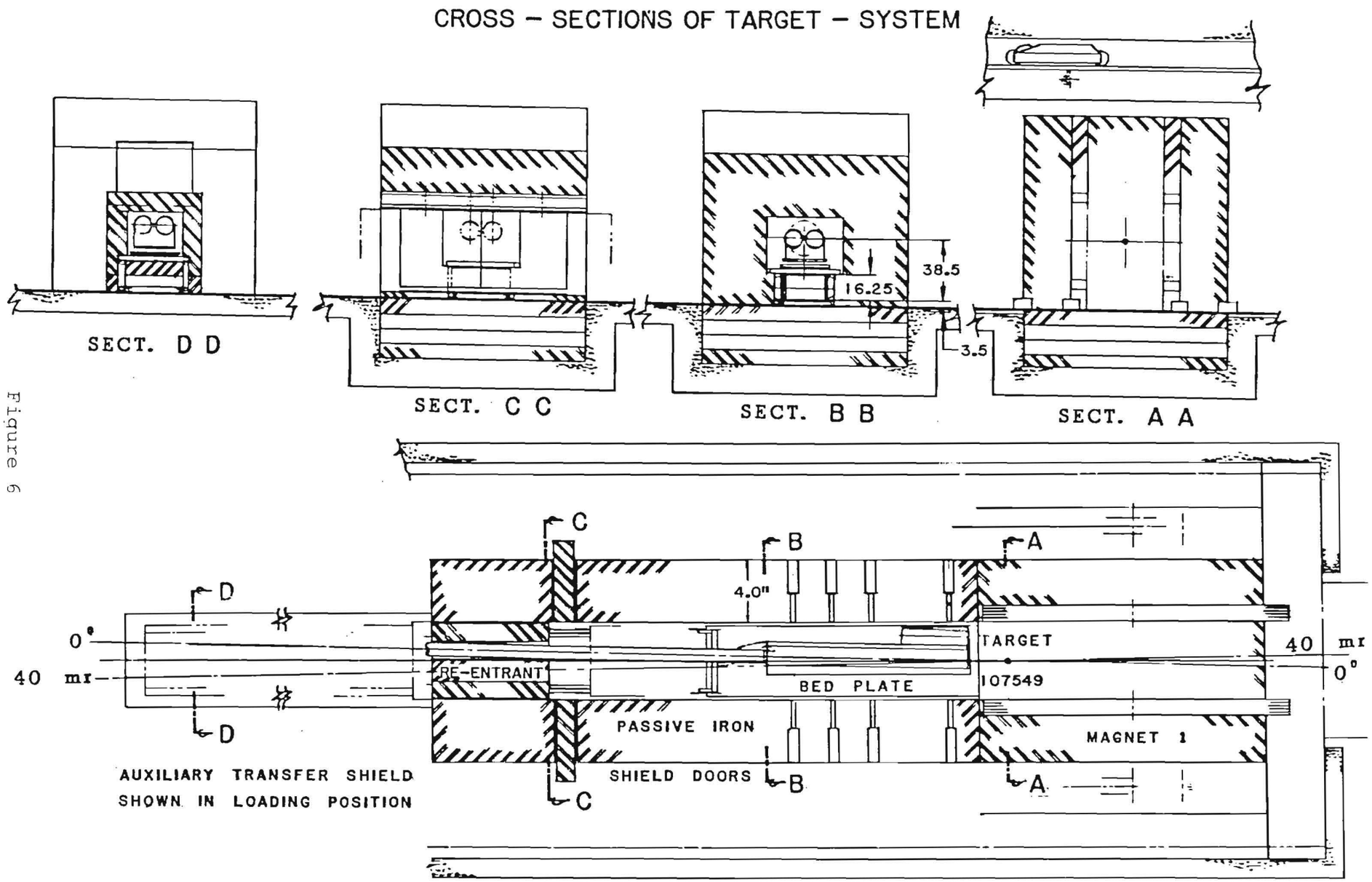
CROSS – SECTIONS OF TARGET – SYSTEM
SECT. D D
SECT. C C
SECT. B B
SECT. A A
38.5
16.25
3.5
C
B
A
D
0°
40 mr
4.0"
TARGET
107549
RE-ENTRANT
BED PLATE
PASSIVE IRON
SHIELD DOORS
MAGNET 1
AUXILIARY TRANSFER SHIELD
SHOWN IN LOADING POSITION

Figure 6

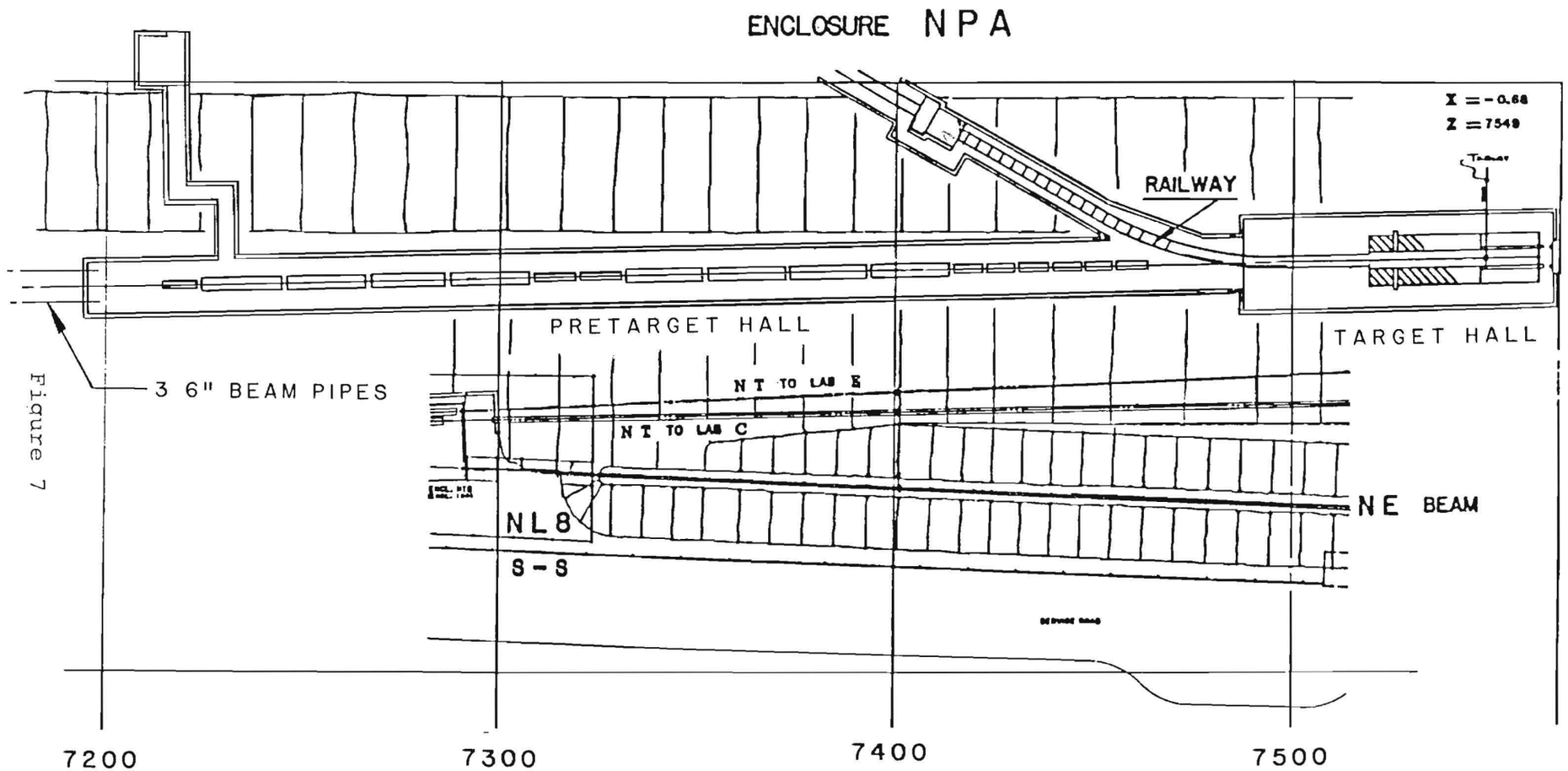
ENCLOSURE NPA
X = -0.68
Z = 7549
RAILWAY
PRETARGET HALL
TARGET HALL
3 6" BEAM PIPES
N T TO LAB E
N T TO LAB C
NE BEAM
NL8
S - S
7200
7300
7400
7500

Figure 7

MUON SPOILER SYSTEM

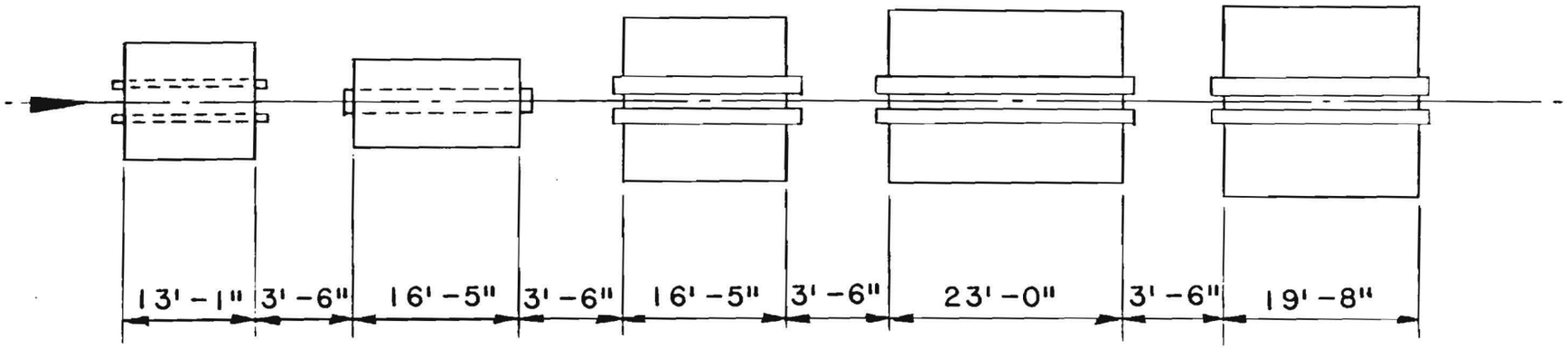

PLAN VIEW

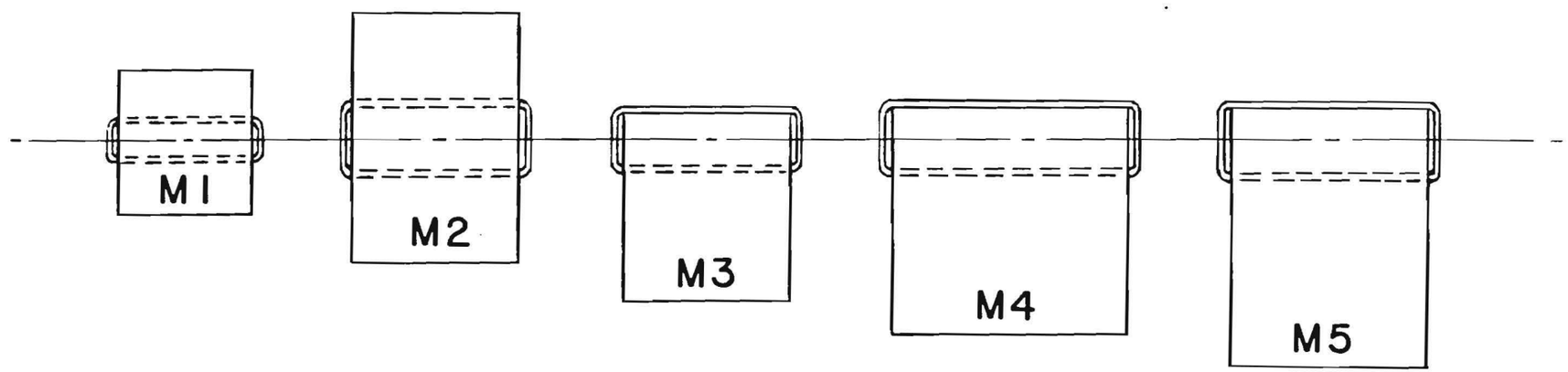

ELEVATION VIEW

Figure 8

M1
4m LONG

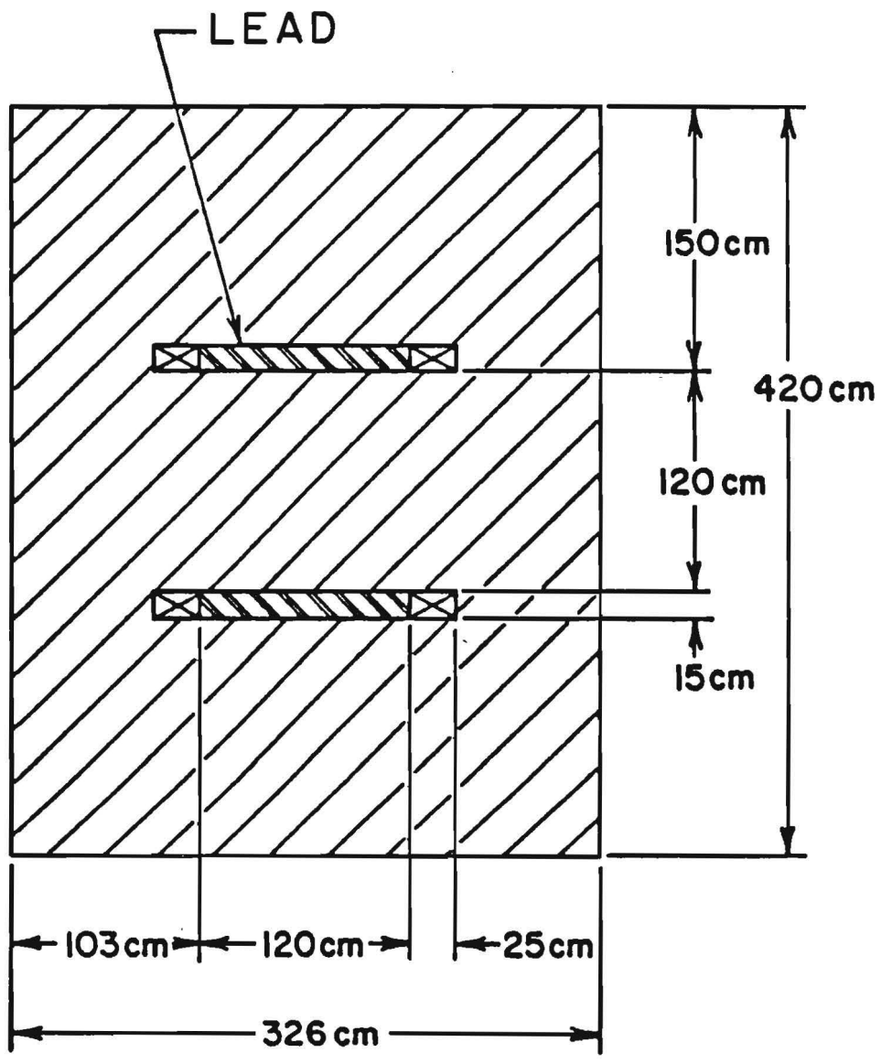

Figure 9

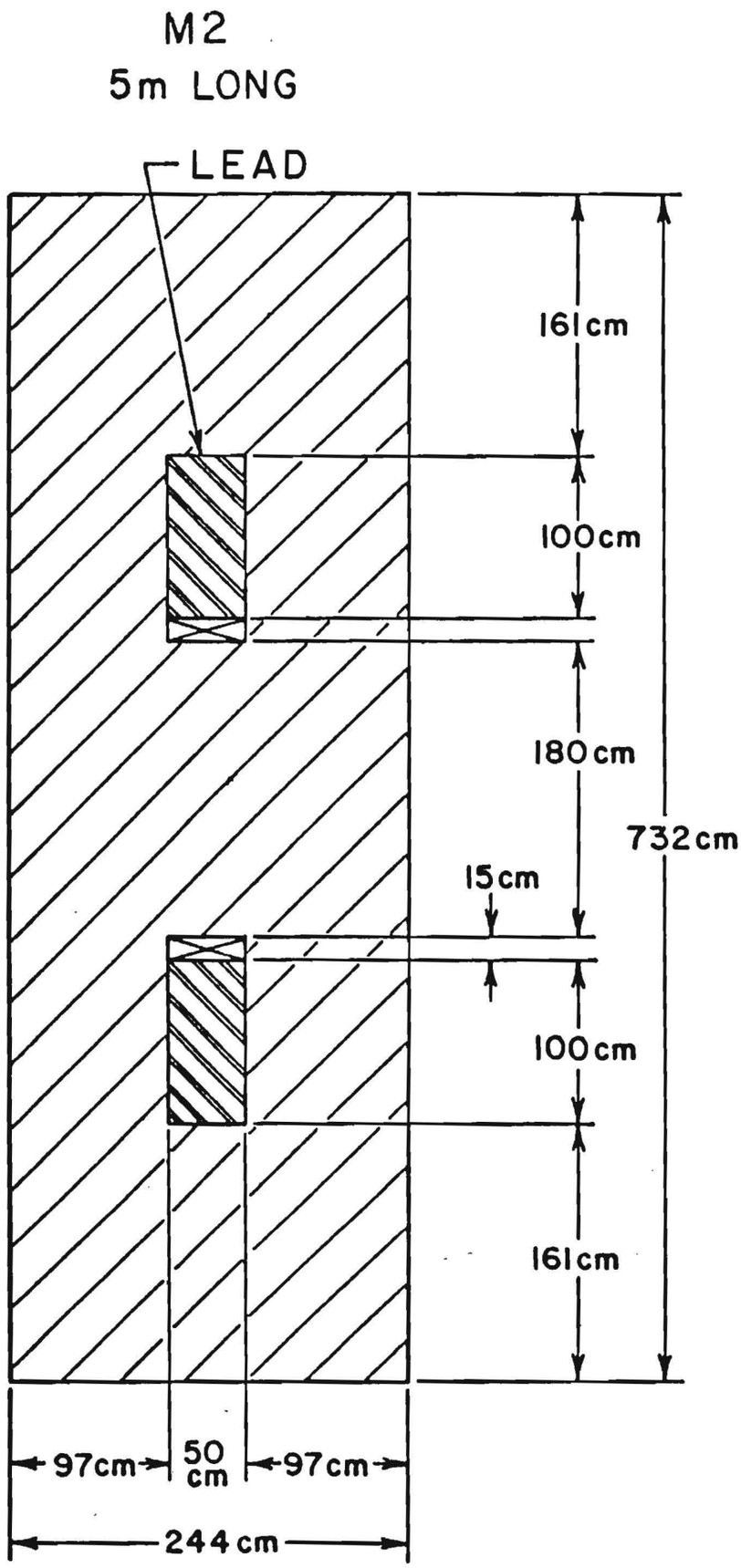
M2
5m LONG
LEAD
161cm
100cm
180cm
732cm
15cm
100cm
161cm
97cm
50 cm
97cm
244cm

Figure 10

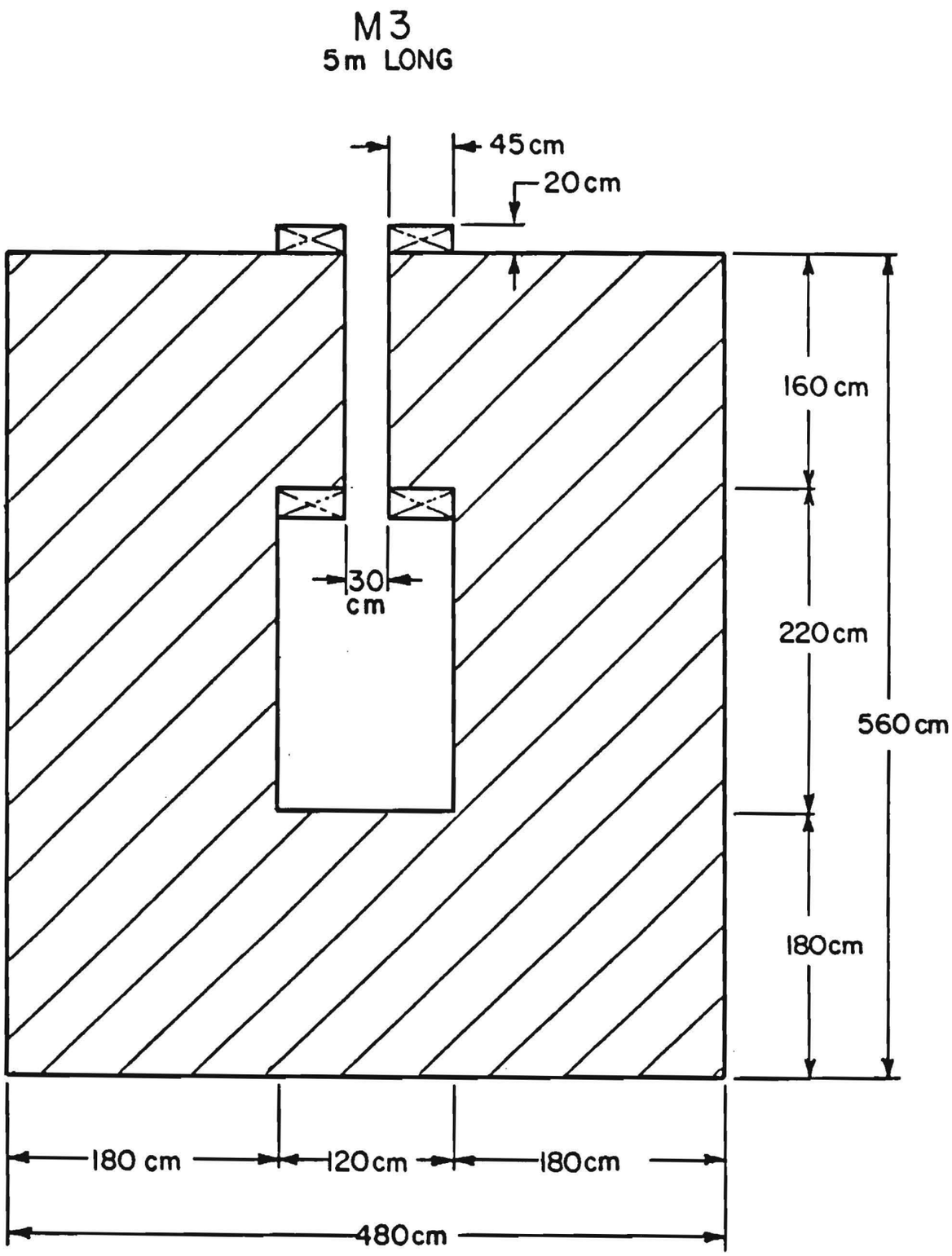
M3
5m LONG
45cm
20cm
160 cm
30
cm
220cm
560cm
180cm
180 cm
120cm
180cm
480cm

Figure 11

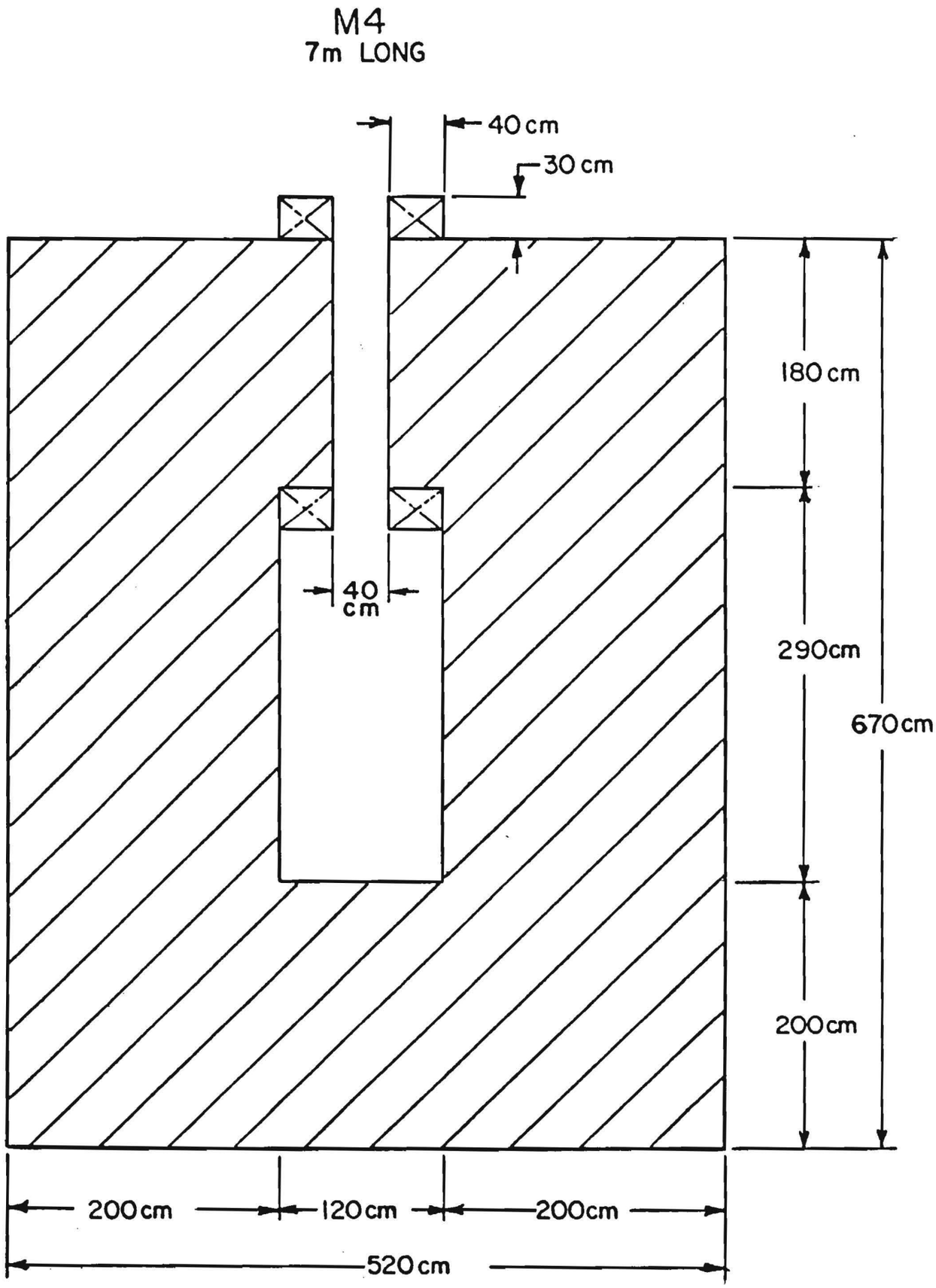
M4
7m LONG
40 cm
30 cm
180 cm
40 cm
290cm
670cm
200cm
200cm
120cm
200cm
520cm

Figure 12

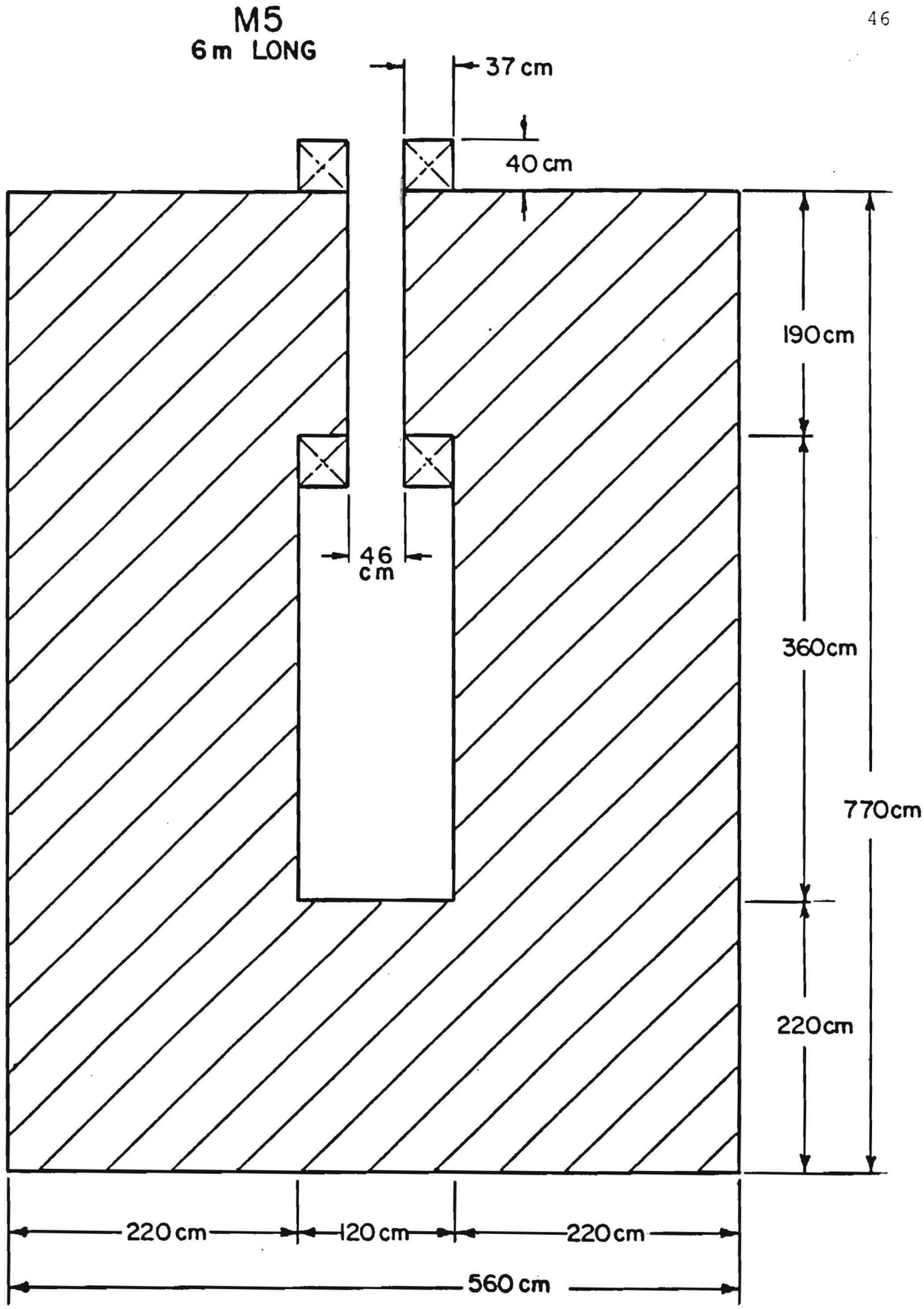
M5
6 m LONG
37 cm
40 cm
190 cm
46 cm
360 cm
770 cm
220 cm
220 cm
120 cm
220 cm
560 cm

Figure 13

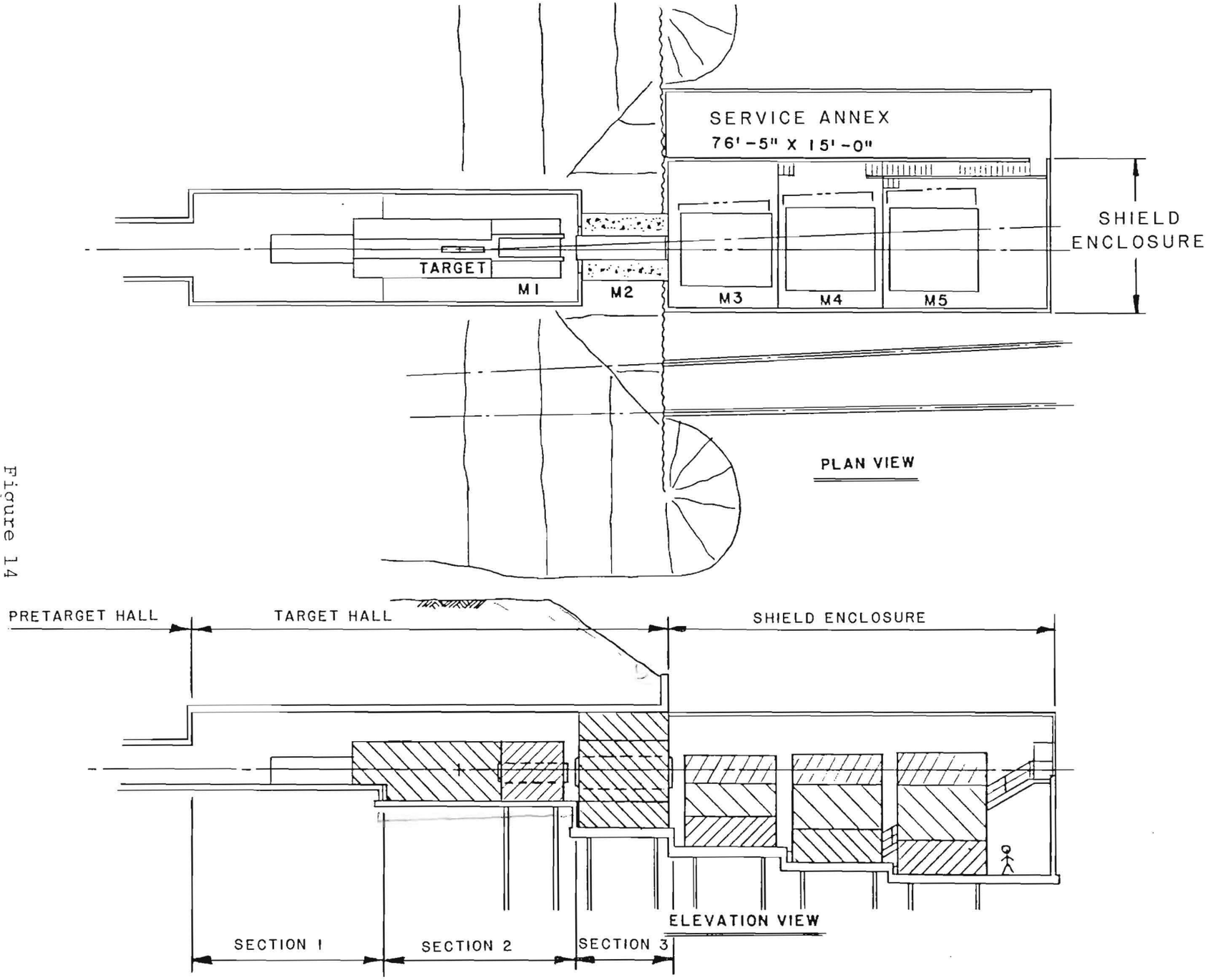
SERVICE ANNEX
76'-5" X 15'-0"
SHIELD ENCLOSURE
TARGET
M1
M2
M3
M4
M5
PLAN VIEW
PRETARGET HALL
TARGET HALL
SHIELD ENCLOSURE
ELEVATION VIEW
SECTION 1
SECTION 2
SECTION 3

Figure 14

VACUUM SYSTEM SCHEMATIC

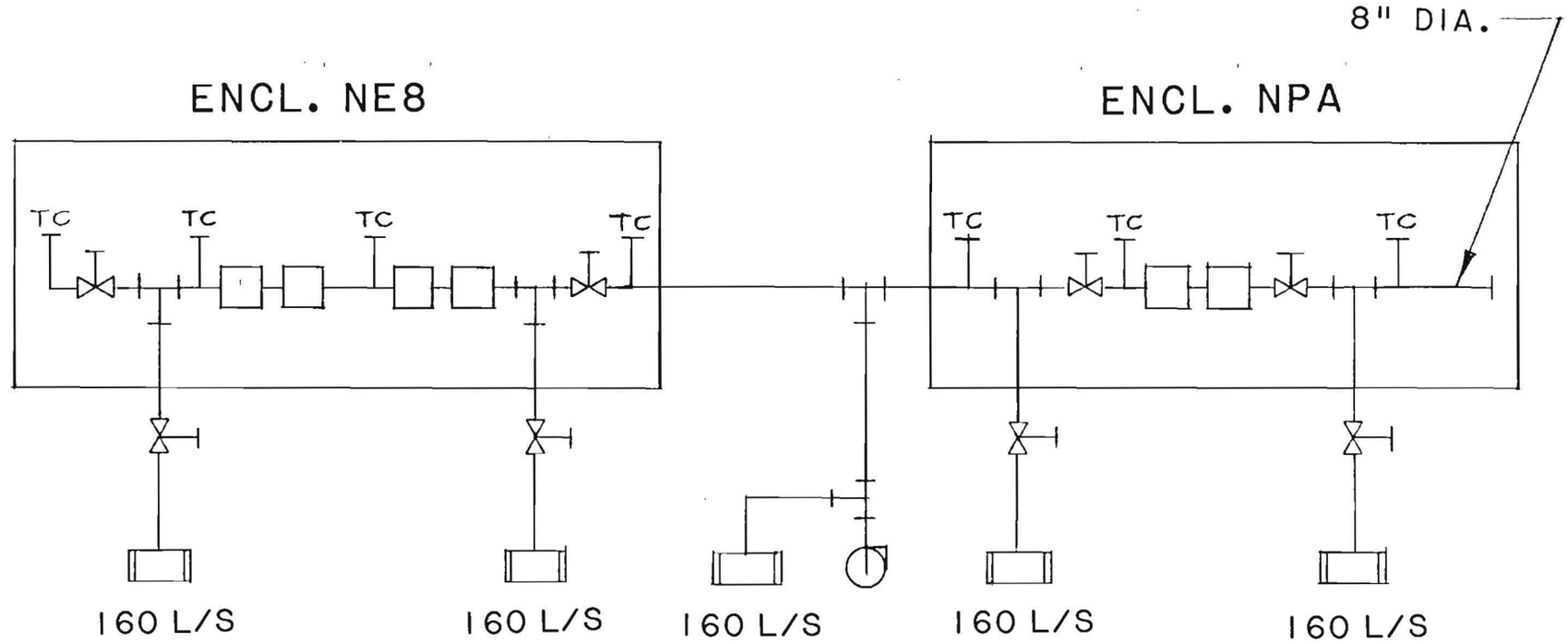

SYMBOLS

TC THERMOCOUPLE, PORT & BLOCKER VALUE

VALVE

TEE

TURBOMOLECULAR SYSTEM SARGENT WELCH # 3120DS AND # 3106DS

ROOTS PUMP SYSTEM L&H #500 WSU & #DK 150

MAGNETS

Figure 15

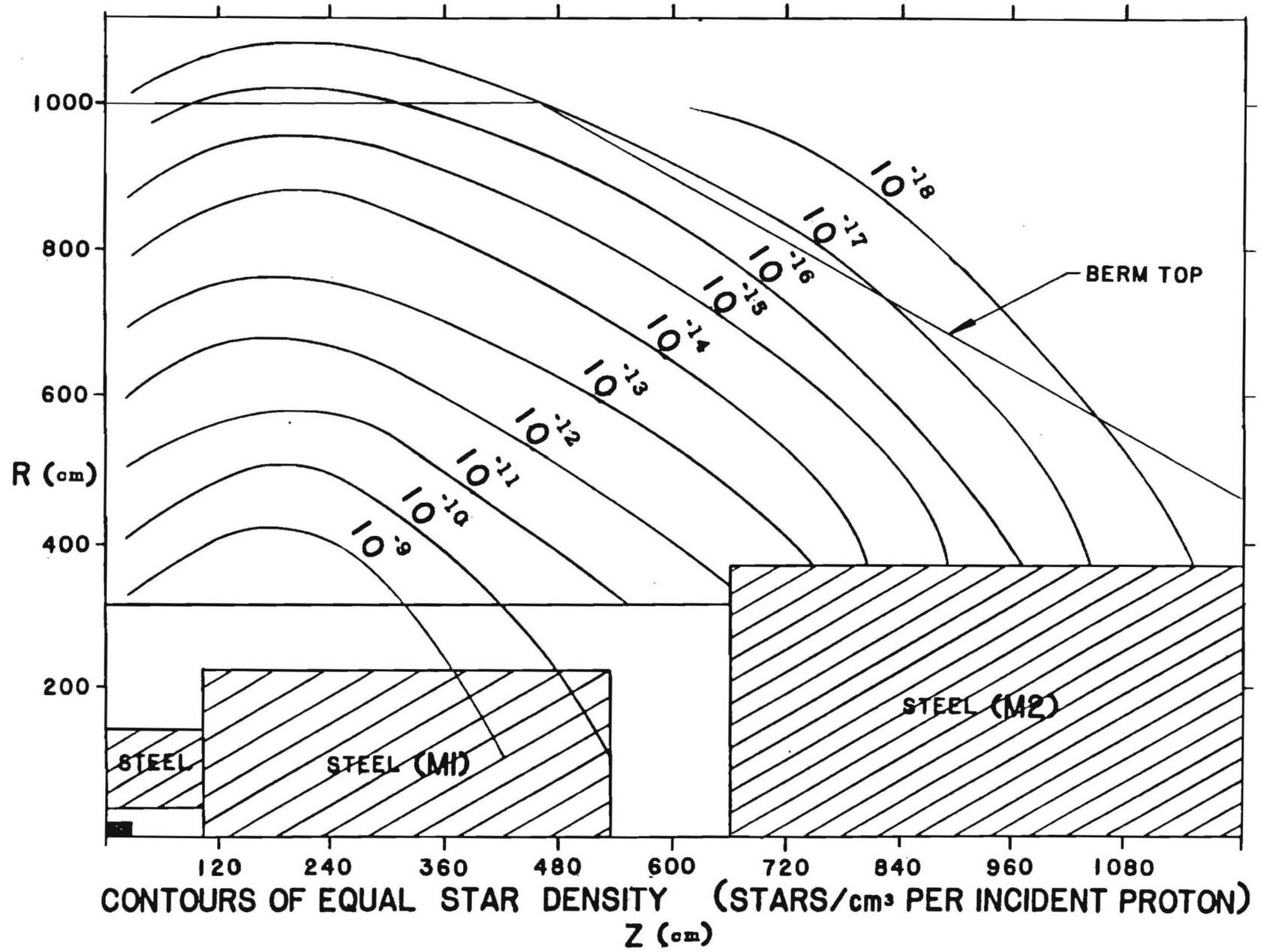

CONTOURS OF EQUAL STAR DENSITY (STARS/cm³ PER INCIDENT PROTON)

Figure 16

RADIATION LEVELS IN ENCLOSURE NCE (LAB F) AT 1 m BUBBLE - CHAMBER

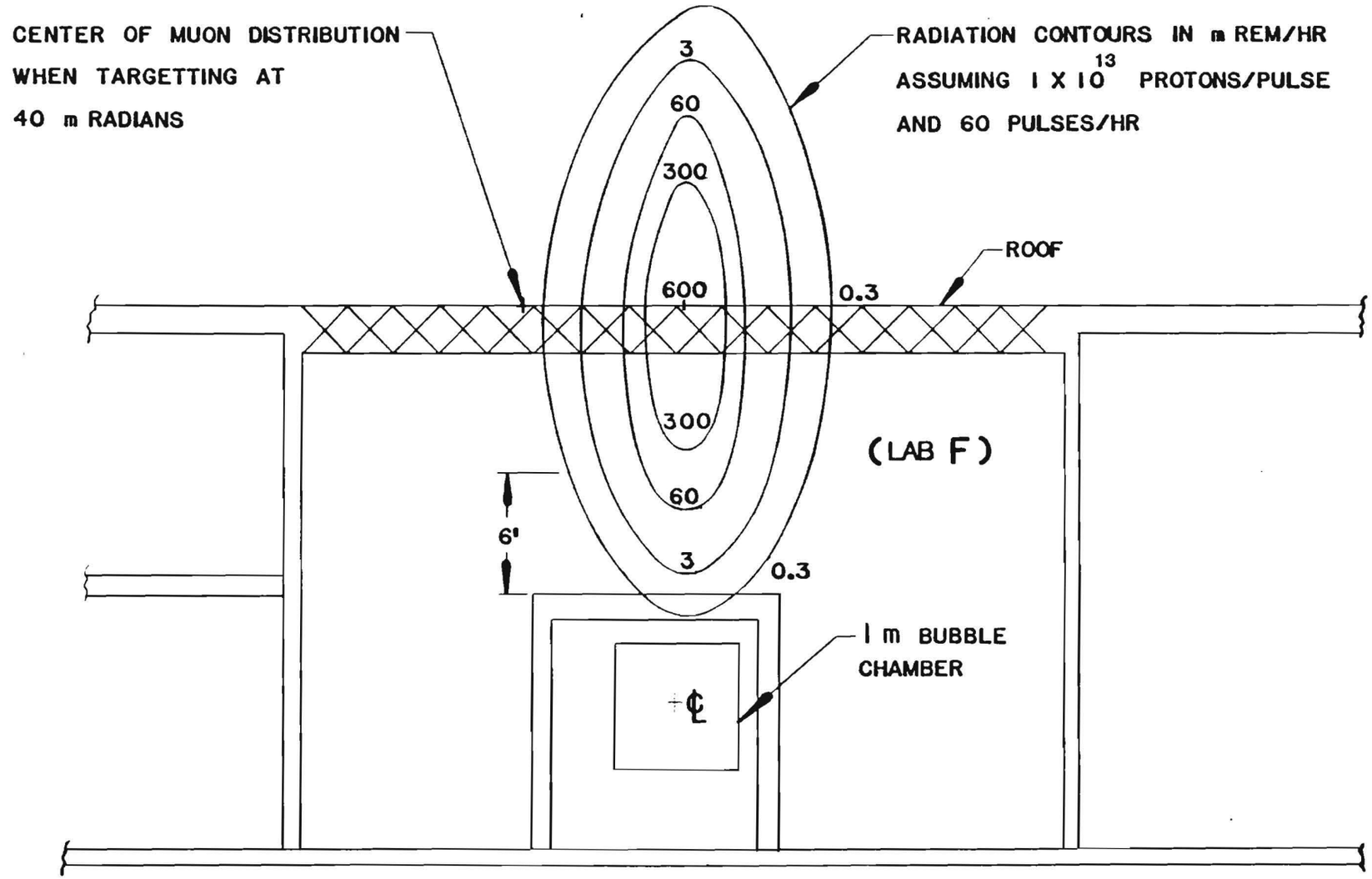

Figure 17

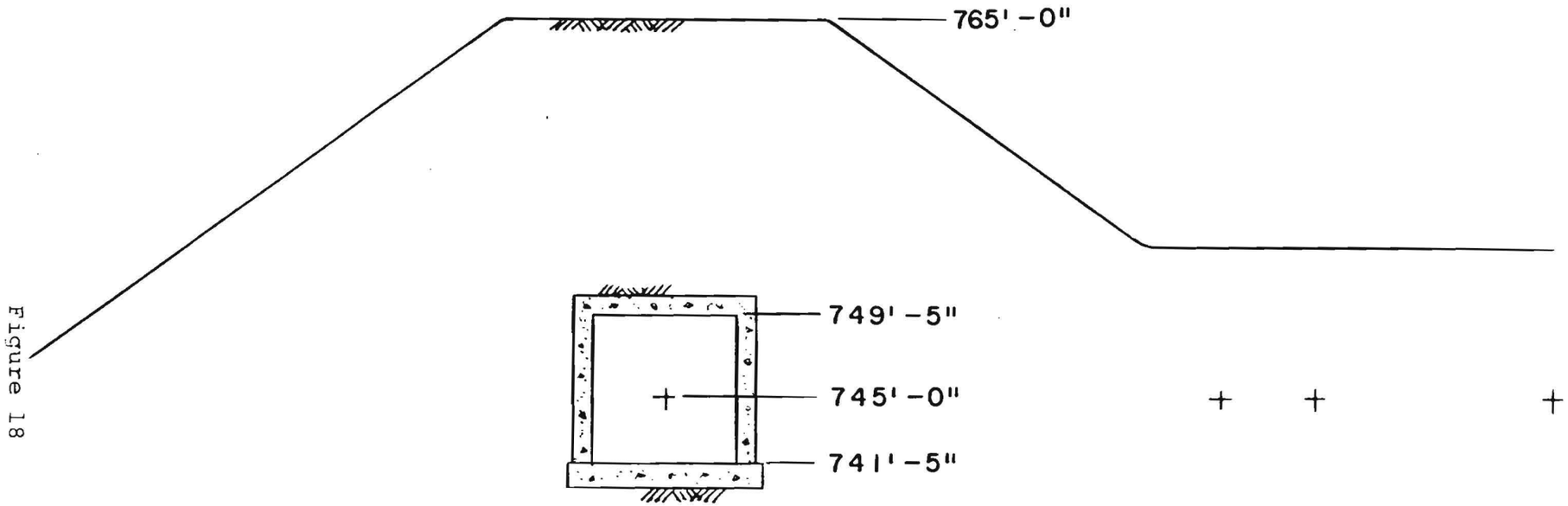

BERM CROSS SECTION AT Z=107,350

Figure 18

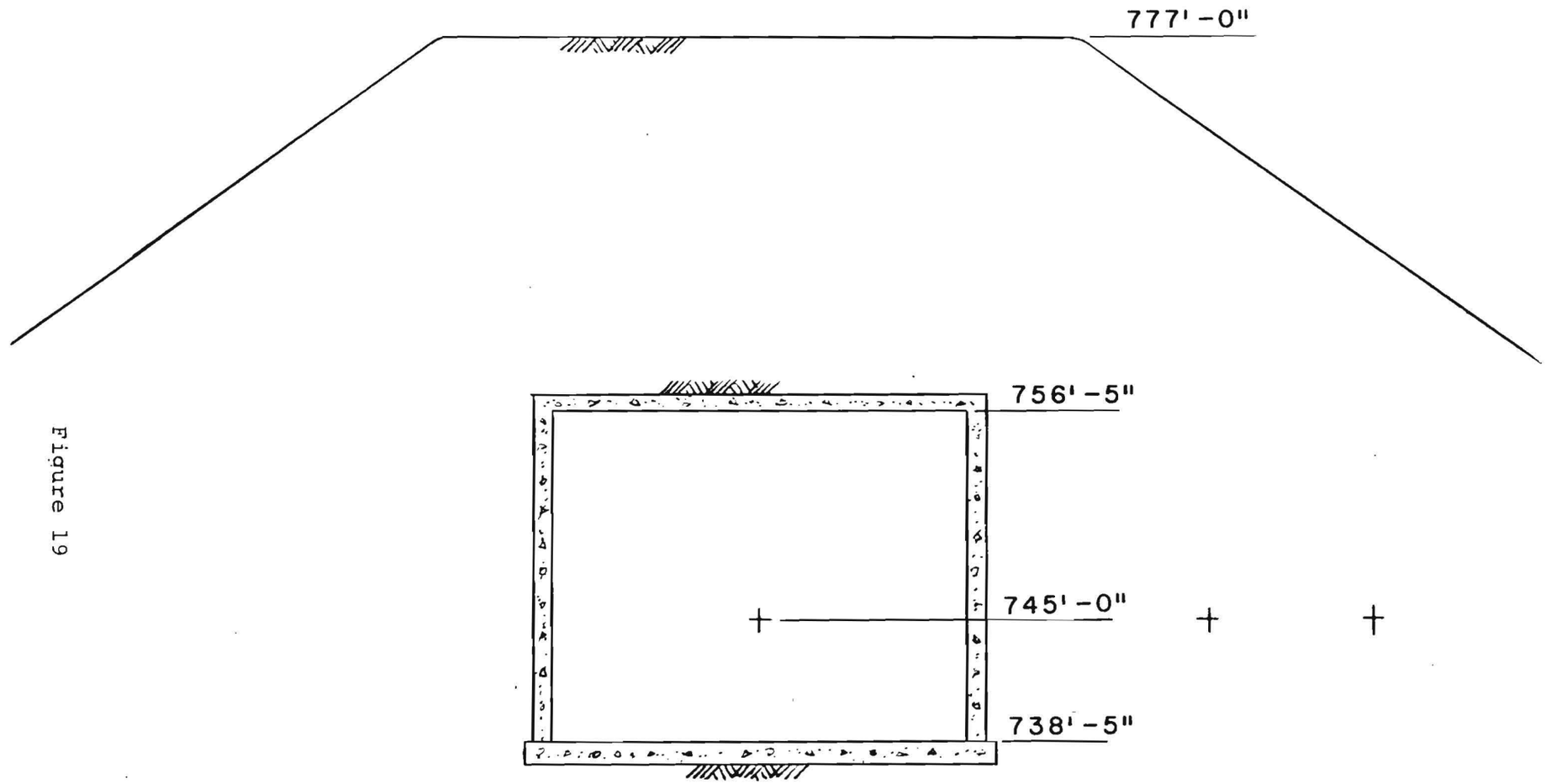

CROSS SECTION AT TARGET

Figure 19

DIRECT NEUTRAL LEPTON FACILITY SCHEDULE

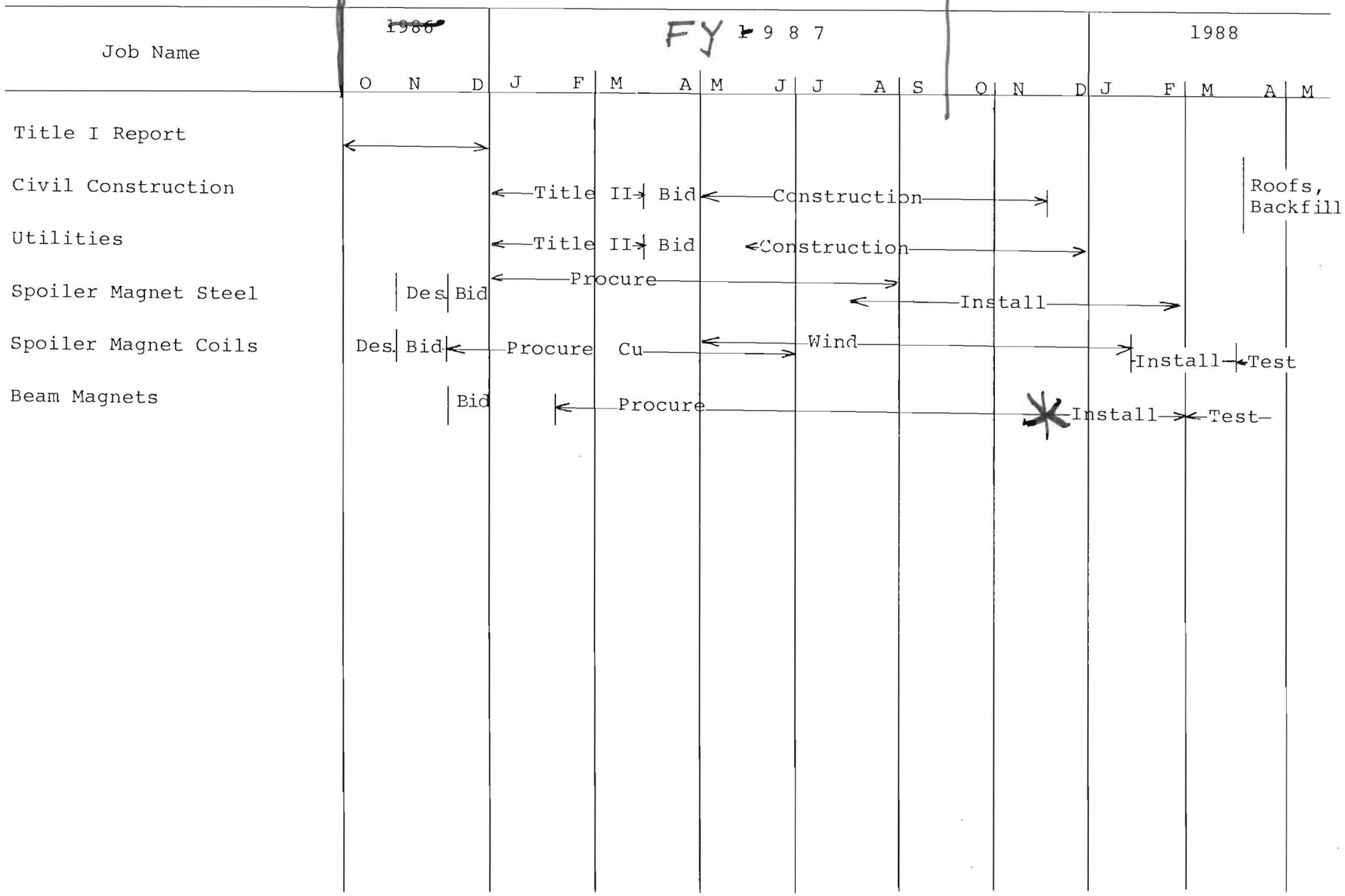

APPENDIX I

Fermilab

TM-1155
1183.000

THE DESIGN OF THE MAGNETIZED MUON SHIELD FOR THE PROMPT NEUTRINO FACILITY

C. Baltay, N. Bosek, J. Couch, B. Cox,

D. Cossairt, R. Fast, E. Leung, J. Lindberg, S. Oh,

M. Peters, I. Pless, J. Spitzer, R. Stefanski and

J. K. Walker

October 12, 1982

CONTENTS

I. Preface

II. Introduction and Summary

III. Description of the Muon Flux Calculational Procedures

IV. Calculation of the E-613 Shield

V. Muon Shield Designs for the Prompt Neutrino Facility

VI. Muon Fluxes Associated with the Proton Beam Transport

VII. Comparison of Designs and Conclusions

Appendix

I. PREFACE

This report covers the work of many individuals and it is appropriate to identify the main areas of responsibility and contributions.

1. Program Development

   a) M. Peters and J. K. Walker.....Fermilab

   b) C. Baltay and J. Spitzer.....Columbia

   c) S. Oh and I. Pless.....MIT

2. Muon Flux Measurements for E-613 were analyzed and provided by

   S. Childress and B. Roe.....Michigan

3. Radiation Calculations

   D. Coissart and J. Couch

4. Mechanical and Electrical Design for Magnetized Muon Shield

   N. Bosek, B. Cox, R. Fast and E. Leung

5. Target Box Design

   J. Lindberg

6. Coordination

   R. Stefanski and J. K. Walker

II. Introduction and Summary

The main technical challenge in the design of the prompt neutrino beam is the magnetized muon shield. Two satisfactory alternate designs have been developed for such a shield during this past year and the background muon fluxes have been calculated by three independent programs at Columbia, Fermilab, and MIT. The background muon fluxes have been calculated to be satisfactory in all of the detectors that might use the beam (i.e., the 32-in. and the 15-ft. bubble chambers, as well as counter detectors located in or near Lab E and Lab C).

1) A conventional iron magnet system with an air gap in the central regions of high muon flux. This design is an improvement over a previous solid iron design in that it eliminates or minimizes the uncertainties due to inelastic scattering and electromagnetic trident production by the large flux of muons traversing the shield (see Figs. 1 and 2).

2) A design using an 8.4m long 50 kG superconducting magnet (see Fig. 3).

A large amount of detailed engineering design has been carried out by various departments at Fermilab on both of the designs listed above, including detailed calculations of the magnetic field shapes, and quite detailed estimates of costs. Both designs seem feasible. We discuss the relative merits of the two designs and conclude that the superconducting design is the more cost effective solution and provides substantial space for

additions or modifications if required.

To check the reliability of the programs used in the design of the muon shield, we have calculated the background muon fluxes in the existing E-613 muon shield in the Meson Lab for a variety of conditions. We found that the agreement between the measured fluxes and the fluxes calculated by the three independent programs is quite satisfactory. These results were reported in June 1982 to the Directorate. The programs reproduce satisfactorily the detailed distributions of the muon flux measured by E-613 at the end plane of the iron shield and at the front face of the detector. The programs also permitted a calculation of a factor of ~5 reduction in the muon flux measured with the modified version of the shield used in the spring 1982 run of E-613. In fact, this reduction factor was predicted by one of the programs <u>before</u> the shield was modified and the fluxes were measured. We therefore have confidence that the programs give realistic results to within a factor of two or three. In view of the safety factor of ~10 in the design for the 15-ft. and 32-in. chambers, this seems quite satisfactory.

In Section III of this report we describe in detail the three Monte Carlo programs used in these calculations. In Section IV we give the details of the flux calculations for the E-613 shield and the comparisons with the observed fluxes with various configurations of that shield. In Section V we describe the designs that have been developed for the neutrino area shield. In Section VI we discuss the problem of proton beam transport losses

and the associated muon fluxes. Finally, in section VII a comparison of the two solutions is made which covers cost, effectiveness, schedule and responsiveness to future unknowns. We conclude that there are not overwhelming reasons for the choice of one design over the other. However, for a variety of secondary reasons the superconducting design offers advantages. We therefore propose the construction of the prompt neutrino facility with the superconducting magnet design.

III. Description of the Monte Carlo Programs

The difficulties and uncertainities in predicting the background muon rate leaking through an active muon shield for a beam dump experiment are by now well known. In order to increase confidence in the design of a Tevatron beam dump facility each experimental group with approval for the area as well as the design group within Fermilab have developed a program for this calculation. The three programs have been written quite independently, though discussions between the groups have frequently contributed to the understanding of the effects involved.

The following sections will discuss the various effects included in the three programs. Detailed equations will be included in an appendix.

Each of the three programs takes a different approach to the calculation of muon production by protons incident on a heavy target. The Columbia and Fermilab programs treat muon production in two stages: pion production and either pion decay or direct muon production expressed as a fraction of pion production. The MIT program directly expresses muon production from all sources.

The pion production formulas used in the Columbia and Fermilab programs derive from the radial scaling fits to pion production data from many $p\ p \rightarrow \pi^{\pm}\ X$ experiments at various energies up to 400 GeV. These fits extend to a $p_{\perp}$ of 6 GeV/c for π^{+} and somewhat lower for π^{-}. In the Fermilab program a correction is made to give agreement with ISR data at still larger $P_{\perp}$, out to 10 GeV/c. Since radial scaling gives excellent fits to data over a wide range of incident proton energies, it is expected that the interpolation to 1 TeV will be satisfactory.

The calculation of pion decay to muons in a material of given interaction length is straight forward. The ratio of direct muon production to pion production has been measured in several experiments at Fermilab. The general result is that the μ/π ratio is independent of $P_\perp$ at small x and falls with x as a power of (1-x). The Columbia formula uses $(1-x)^3$ and the Fermilab program $(1-x)^2$. Either form gives a reasonable fit to the measurements.

The product of pion production and either the pion decay probability or the μ/π ratio gives the rate of muon production by the primary proton beam. In a thick target such as the beam dump re-interaction of produced pions and protons are an important contribution to the total. The Columbia program carries out a shower Monte Carlo for each production interaction. In this calculation secondary pions are allowed to interact and produce either more pions or direct muons. The Fermilab program uses an enhancement factor as a function of p_π/p_{beam} that is derived from a separate shower Monte Carlo calculation.

This calculation allows secondary pions to interact as in the Columbia program, but in addition one forward secondary nucleon is generated and allowed to interact. This calculation follows the shower to a depth of 3 in the pions and 6 in the nucleons.

Finally, both the Columbia and Fermilab calculations must correct from production in pp collisions to that in pA collisions where A may be Be, Fe, Cu, or W. For this purpose an approximate A dependence of the pion invariant cross sections as given by L. Voyvodic is applied. In addition, the μ/π ratio should increase as $A^{.2}$ since pion production rises more slowly than direct muon production.

The MIT program does not attempt to determine muon production from a stepwise calculation but relies instead upon a fit to total muon production from a W target as generated by W. Buza. That formula includes both direct and decay muons from all generations of the shower in a thick target.

All three of the programs under discussion make use of standard techniques to follow the central trajectory of a produced muon from the target through the absorbers and magnets of a particular shield design. The Columbia and Fermilab programs generate initial muon momenta and directions randomly and weight according to the production spectrum discussed above. The MIT program proceeds more systematically, stepping in $p_\perp$ and p until all of phase space is covered. Comparisions of trajectories for particular initial conditions have indicated good agreement among the programs in the calculation of magnetic bending.

A muon that would not strike the detectors if it were not deflected may nonetheless produce a hit if it undergoes one of a number of processes along its path. The first such process considered in the programs is multiple Coulomb scattering. In the Columbia and MIT programs Coulomb scattering is normally treated by calculating the undeflected ray and determining where it would strike the plane of a detector. The total Coulomb scattering angle is calculated and the probability of a hit by this central ray is determined by an integration of the 2-dimensional scattering probability distribution over the area of the detector. In contrast, the Fermilab program changes the direction of a muon according to the Coulomb scattering distribution appropriate to the thickness of material traversed in one step of the path integration.

An important observation is that for large thickness, such as the entire dump, a Gaussian distribution is an excellent approximation to the true Coulomb distribution. For small steps the Molière tails must be taken into account. The Fermilab program does this in a way that crudely accounts for the nuclear form factor but includes the effects of large angle plural scattering.

A second effect that can cause an otherwise "safe" muon trajectory to strike a detector is inelastic muon scattering in the material of the dump. The Fermilab program determines the effect of inelastic muon scattering by producing a scatter at a random point along the trajectory and then following the deviated path. Scatters are generated uniformly in and within chosen limits. This is to ensure that all regions of the scattering distribution are sampled adequately. The scattering probability is converted to a weight and multiplies the production weight of the muon to give the final weight added to the total to give the number of hits on a detector.

In the MIT program inelastic scattering is taken account of by an integration over q^2 and ν carried out at many points along the path of a muon. The range in ν is determined taking into account the stopping power of the portion of the dump remaining between the scattering point and the detector. The integral accumulates the scattering probability for that portion of the kinematic space that leads to a hit on the detector.

A third process that can contribute to the background is electromagnetic trident production. This effect is particularly dangerous since it can lead to an effective change of sign of the muon and thus to a cancellation of the magnetic deflection achieved before

the interaction. The spectrum is relatively hard, dropping as 1/p, so it is difficult to defeat this process by range. All three programs calculate the effects of trident formation by treating it as a special kind of inelastic scattering, but allowing for the possible sign change.

The Columbia and MIT programs both treat energy loss of the muons as they travel through the dump as a continuous process. The Columbia program allows for the energy dependence of dE/dx in iron but treats loss in dirt as a constant. The MIT program uses an equation that fits the calculated loss rate in iron as a function of energy and scales that formula to give the correct minimum loss rate for dirt. In the Fermilab program a table is constructed that includes the exact restricted energy loss calculation for each relevant process-ionization, electron pair production and Bremstrahlung. This table contains dE/dx for each material at intervals of 1 GeV/c momentum up to 1 TeV/c. Only losses due to collisions in which less than 10% of the energy is lost are included in this table. A separate calculation randomly generates an occasional large stochastic energy loss from the range 10% to 100% of the incident energy.

In the Columbia and MIT programs the magnetic fields in active elements of the dump are always entered in the form of detailed field maps. These maps have been derived from various sources, sometimes by hand calculation and sometimes by detailed calculation with programs such as POISSON. The Fermilab Monte Carlo has the capability to accept detailed field maps, but has usually been applied in a mode in which it is given the field in a series of regions on the midplane of a magnet and then calculates the vertical and horizontal return fields by applying flux conservation. This

calculation gives the uniform field that would return the central flux. If the iron of the return yoke is saturated a uniform field is a good approximation. For unsaturated return yokes a linear variation is added to give agreement with detailed calculations.

Appendix

This appendix gives details of the equations used in the three beam dump Monte Carlo programs. For each class of formula the equations in each program will be detailed.

1 Energy Loss

1.1 Columbia

In Fe the Columbia program uses an energy dependent rate of energy loss given by:

$$\frac{dp}{dx} = \begin{cases} 1.327 + 2.418\times10^{-2}\,p - 3.8342\times10^{-4}\,p^2 & p < 30\ \text{GeV/c} \\ 1.592 + 5.169\times10^{-3}\,p + 6.971\times10^{-7}\,p^2 & p > 30\ \text{GeV/c} \end{cases}$$

$$\text{IN GeV/c /m}$$

In concrete a constant value is used:

$$\frac{dp}{dx} = .5 \quad \text{GeV/c /m}$$

1.2 Fermilab

A calculated rate of restricted dE/dx for $dE/E < .1$ is used in the Fermilab progam. The values are shown in Figure A-1. Larger stochastic losses are randomly produced.

1.3 MIT

$$\left.\frac{dp}{dx}\right|_{FE} = 1.16 + .13 \log p + 7.1\times10^{-6}(\log p)^7 \quad \text{GeV/c /m}$$

$$\left.\frac{dp}{dx}\right|_{CONC} = \frac{.45}{1.16}\left.\frac{dp}{dx}\right|_{FE},$$

The energy loss rates used in the three programs are compared in Figure A-1.

2 Pion Production

2.1 Columbia

$$E\frac{d^3\sigma}{dp^3} = A\frac{1}{(1+P_\perp^2/M^2)^4}(1-x_R)^n$$

$$x_R = E^*/E^*_{max}$$

	A	M^2	n
π^+	30.2	.66	3.2
π^-	17.4	.74	3.9

2.2 Fermilab

$$E\frac{d^3\sigma}{dp^3}\Big|^{A=1}_{\pi^+} = 70\,e^{-7x_R}\frac{1}{(1+P_\perp^2/m^2)^q}$$

$$m^2 = .1 + 3.2x_R - 1.3x_R^2 \qquad q^2 = 3.5 + (8x_R - 4x_R^2 - .5)\left(\frac{.35}{1+e^{(P_\perp - 9.6)/1.8}} + .6\right.$$

$$\pi^-/\pi^+ = 1/(1.7 + 2.2x_\perp^2 + 9.1x_F^2)$$

$$\frac{d^3\sigma}{dp^3}\Big|^A \Big/ \frac{d^3\sigma}{dp^3}\Big|^1 = A^{.8-.3x_F+.15P_\perp}$$

2.3 MIT

The MIT progam does not separate muon production into pion production and subsequent decay or proportional direct muon production. The following equation is thus for muon production:

$$\frac{dN}{dE\,dp_x\,dp_y} = \alpha\frac{(1-E/E_0 - P_\perp^2/2E)^4(1-E/E_0)}{E/E_0(1+P_\perp^2/.74)^{3.5}}$$

$$\mu^- \quad \frac{\alpha}{10^6/10^{12}\,p}$$

$$\mu^+ \quad 1.5\times10^6/10^{12}\,p$$

AT 400 GeV E_0

3 Muon-pion Ratio

3.1 Columbia

$$\left.\frac{\mu}{\pi}\right|_{DIR} = 10^{-4}\,(1-x_F)^3$$

SHOWER MONTE CARLO

3.2 Fermilab

$$\left.\frac{\mu}{\pi^+}\right|_{DIR} = 10^{-4}\,(-1.91+.88\,\log E_{CM})\,(A/56)^{0.2}\,(1-x_F)^2 \qquad E_{CM} > 15.4 \text{ GeV}$$

$$R^{SHOWER}_{DIR} = 1+\left(.115/(E/E_{BEAM})\right)^{1.5} \qquad R^{SHOWER}_{DECAY} = 1+\left(.175/(E/E_{BEAM})\right)^{1.81}$$

3.3 MIT

See remarks above under pion production.

The production of muons from an Fe target as measured by Bodek et al and as calculated by the Columbia and Fermilab programs is shown in Figure A-2a. Figure A-2b compares the same data scaled to W with the values from the MIT program.

4 Coulomb Scattering

4.1 Columbia

The Columbia program uses standard Gaussian multiple scattering with:

$$\theta_{1/e} = \frac{.021}{p\beta}\sqrt{L/L_R}$$

4.2 Fermilab

The Fermilab progam uses a modification of the Moliere scattering formalism that takes into account the form factor of the iron nucleus. Figure A-3 gives the shapes of the scattering angle distributions used.

4.3 MIT

Standard multiple scattering:

$$\theta_{1/e} = \frac{.02}{E}\sqrt{L/L_R}$$

5 Inelastic Muon Scattering

5.1 Columbia

SIMILAR TO FERMILAB

5.2 Fermilab

$$\frac{d^2\sigma}{dq^2\,d\nu} = \frac{2\pi\alpha^2}{p^2 q^4}\,\frac{F_2(q^2,\nu)}{\nu}\left[2EE' - \frac{q^2}{2} + \frac{(q^2-2M_\mu^2)(1+\nu^2/q^2)}{1+R}\right]$$

$$F_2(q^2,\nu) = A(2+\epsilon_0)x(1-x)^{1+\epsilon_0} + B\,\frac{14(4+\epsilon_1)}{9(5+\epsilon_1)}(1-x)^{3+\epsilon_1}\,\frac{q^2}{q^2+m_0^2}$$

$$\epsilon_0 = G_{00} + \epsilon \qquad \epsilon_1 = G_{10} + \epsilon$$

$$\epsilon = K \log\left[(q^2+m_0^2)/m_0^2\right]$$

$A = .661 \quad B = .357 \quad K = .33 \quad G_{00} = 1.69 \quad G_{10} = 7.2 \quad m_0^2 = .573$

$R = .44$

5.3 MIT

$$\frac{d^2\sigma}{dE_\mu'\,d\Omega} = \frac{4\alpha^2 E_\mu'}{q^4}\,W_2(q^2,x)\left[\frac{\sin^2\theta/2}{G(\nu,q^2)\,M} + \frac{x\cos^2\theta/2}{\nu}\right]$$

Figure A-4 compares calculations by the three programs with data from the EMC on the scattering of 280 GeV/c muons from 2.3 m of Fe.

6 Muon Trident Formation

All of the programs treat muon trident formation as a special kind of deep inelastic scattering, including a possible sign change of the produced muon.

6.1 Columbia

Uses the real photon process for muon pair production multiplied by a factor (a là Jack Smith) to take the virtual photon process (which is larger) into account.

6.2 Fermilab

$$\sigma(E) = \frac{\alpha}{2\pi}\left(\frac{Z}{6}\right)^2 \left[\log\frac{E}{6.7 m_\mu}\left(\log\frac{E}{6.7 m_\mu} - \frac{3}{2}\right)\ln 3 \quad 1.52\,\mu b\right]$$

$$\frac{dN}{d\nu\, dM_{\mu\mu}} \propto \frac{1}{\nu} e^{-2M_{\mu\mu}}$$

6.3 MIT

$$\frac{d\sigma}{d\nu\, dQ^2} = \frac{\alpha}{\pi}\frac{1}{Q^2}\frac{1}{\sqrt{Q^2+\nu^2}}\left(\frac{Z}{6}\right)^2 1.52\,\mu b\,\frac{m_\mu^2}{m_\mu^2+Q^2}$$

$$\left[(1-\nu/E)(1-Q^2_{min}/Q^2) + \frac{\nu^2}{2E^2} + \frac{Q^2}{4E^2}\right]\log\frac{\nu}{6.2 m_\mu^2}$$

FLAT ν DIST

COLLINEAR PRODUCTION

A-1

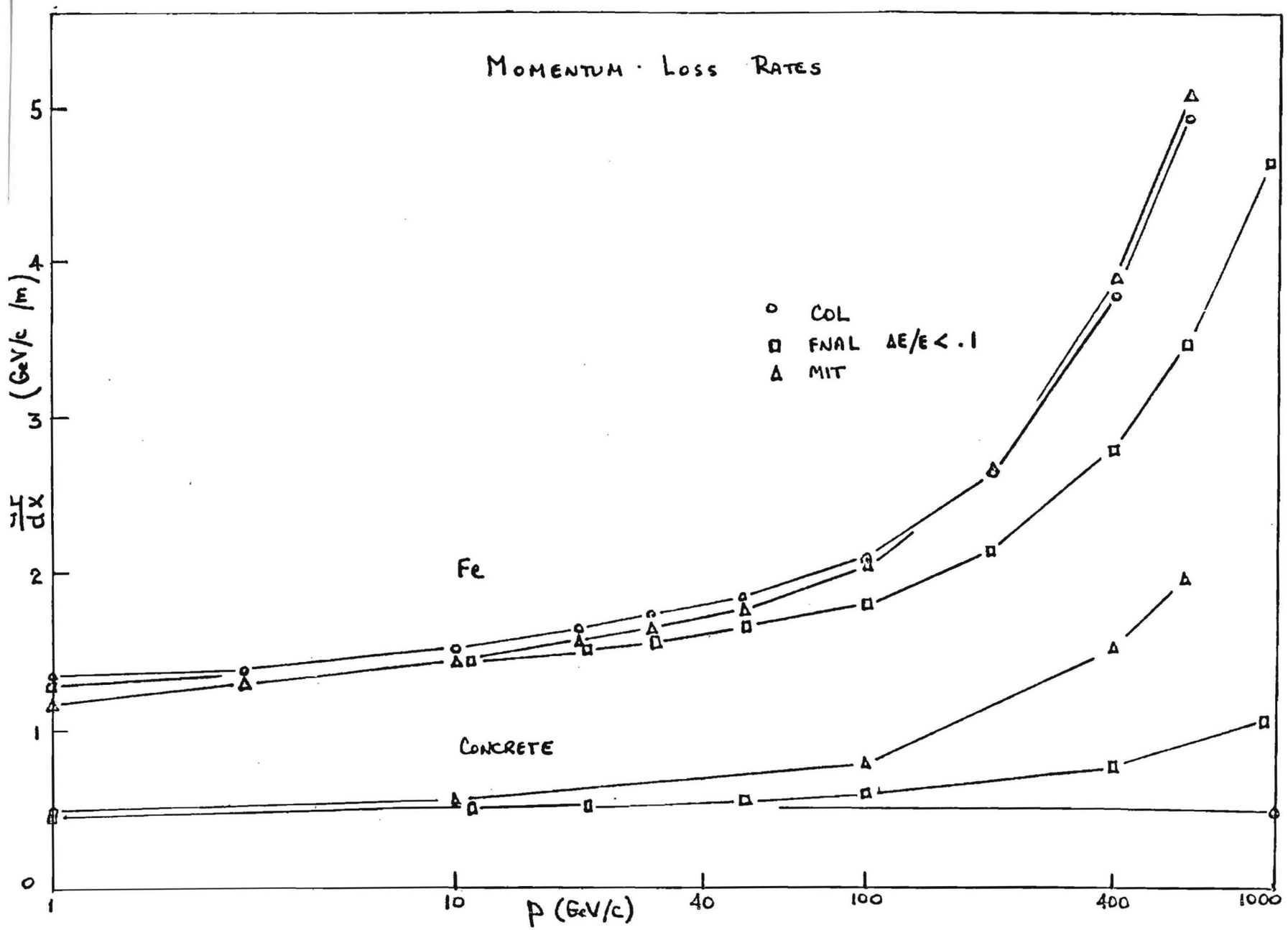
MOMENTUM · LOSS RATES
COL
FNAL ΔE/E < .1
MIT
Fe
CONCRETE
dp/dx (GeV/c /m)
p (GeV/c)
0
1
2
3
4
5
1
10
40
100
400
1000

A-2a

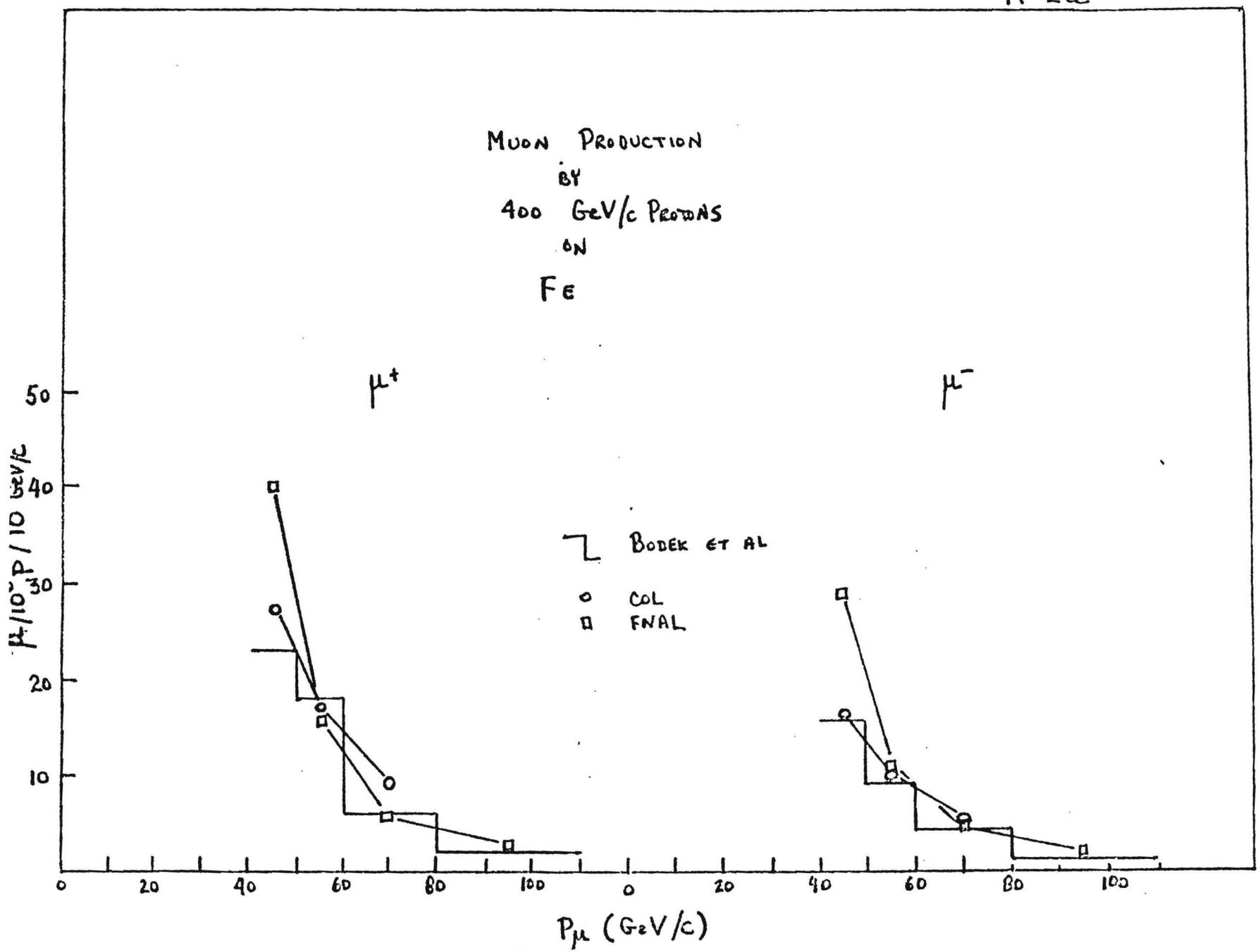
MUON PRODUCTION
BY
400 GeV/c PROTONS
ON
FE
μ^+
μ^-
BODEK ET AL
COL
FNAL
$\mu/10^7 P$ / 10 GeV/c
50
40
30
20
10
0
20
40
60
80
100
P_μ (GeV/c)

A-2 b

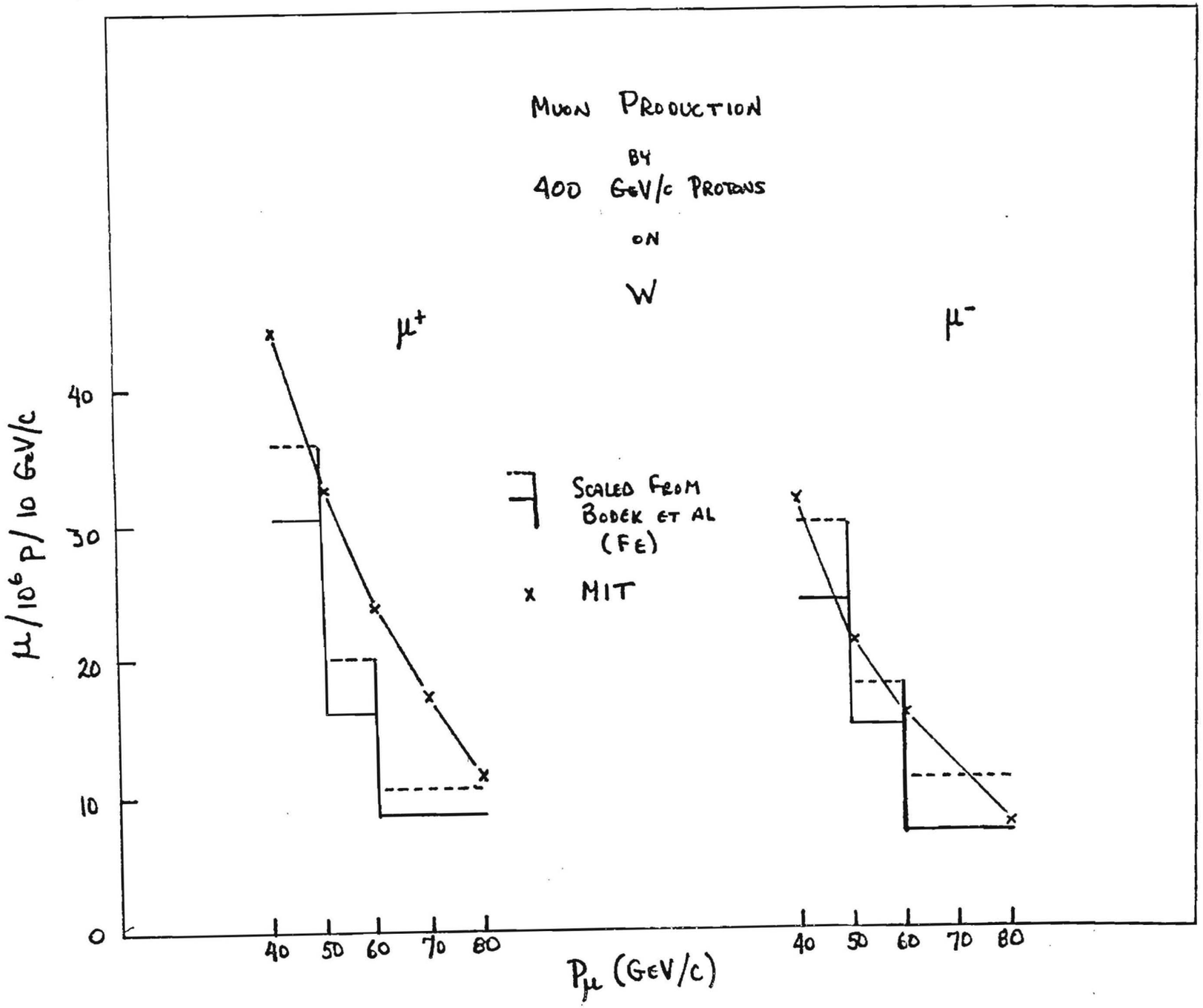
MUON PRODUCTION
BY
400 GeV/c PROTONS
ON
W
μ^+
μ^-
SCALED FROM
BODEK ET AL
(FE)
x MIT
$\mu/10^6$ P/ 10 GeV/c
0
10
20
30
40
40
50
60
70
80
P_μ (GeV/c)

A-3

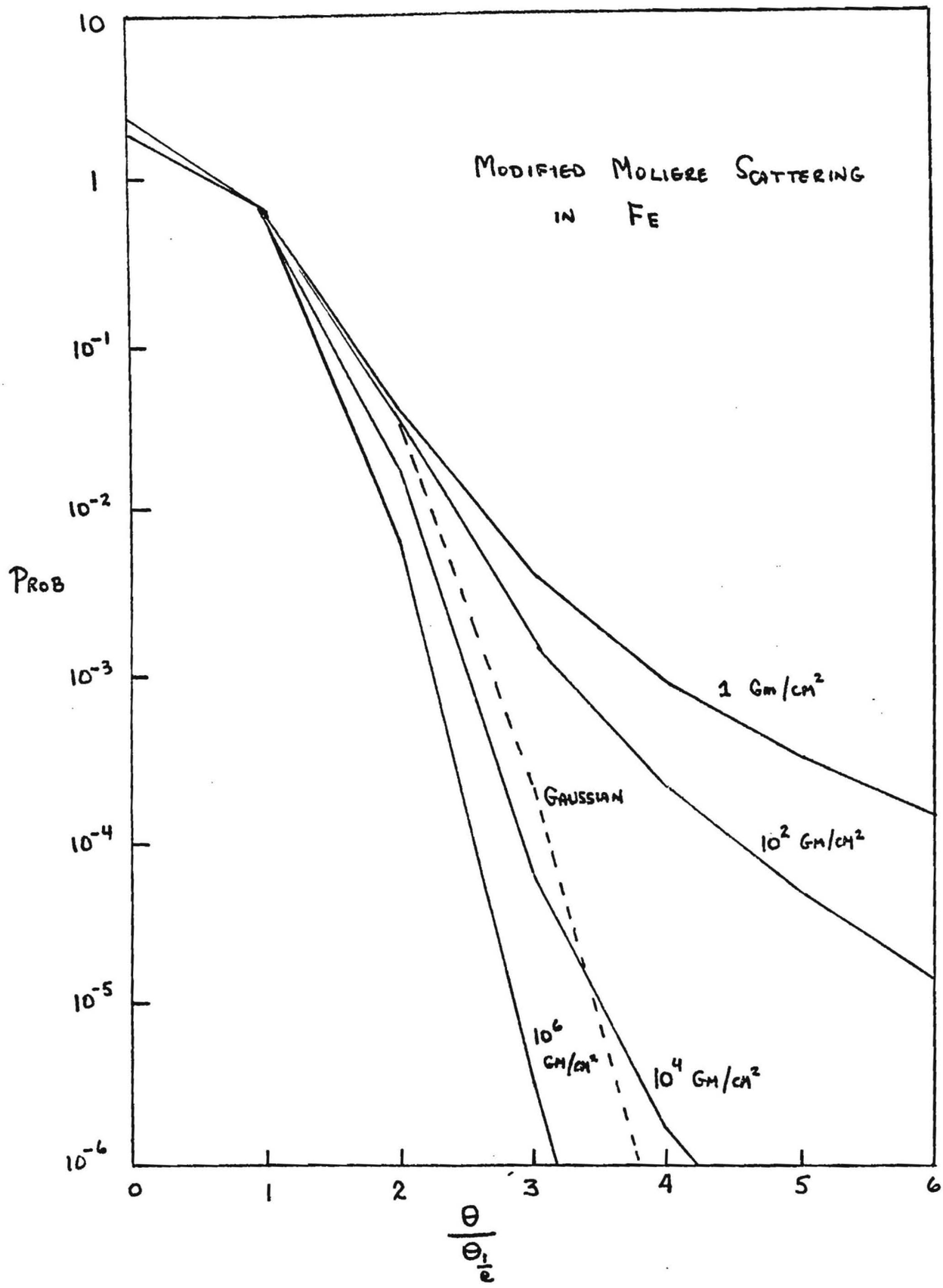
MODIFIED MOLIERE SCATTERING
IN FE
PROB
10
1
10^{-1}
10^{-2}
10^{-3}
10^{-4}
10^{-5}
10^{-6}
0
1
2
3
4
5
6
$\frac{\theta}{\theta_{\frac{1}{2}}}$
1 GM/CM²
10^2 GM/CM²
10^4 GM/CM²
10^6 GM/CM²
GAUSSIAN

A - 4

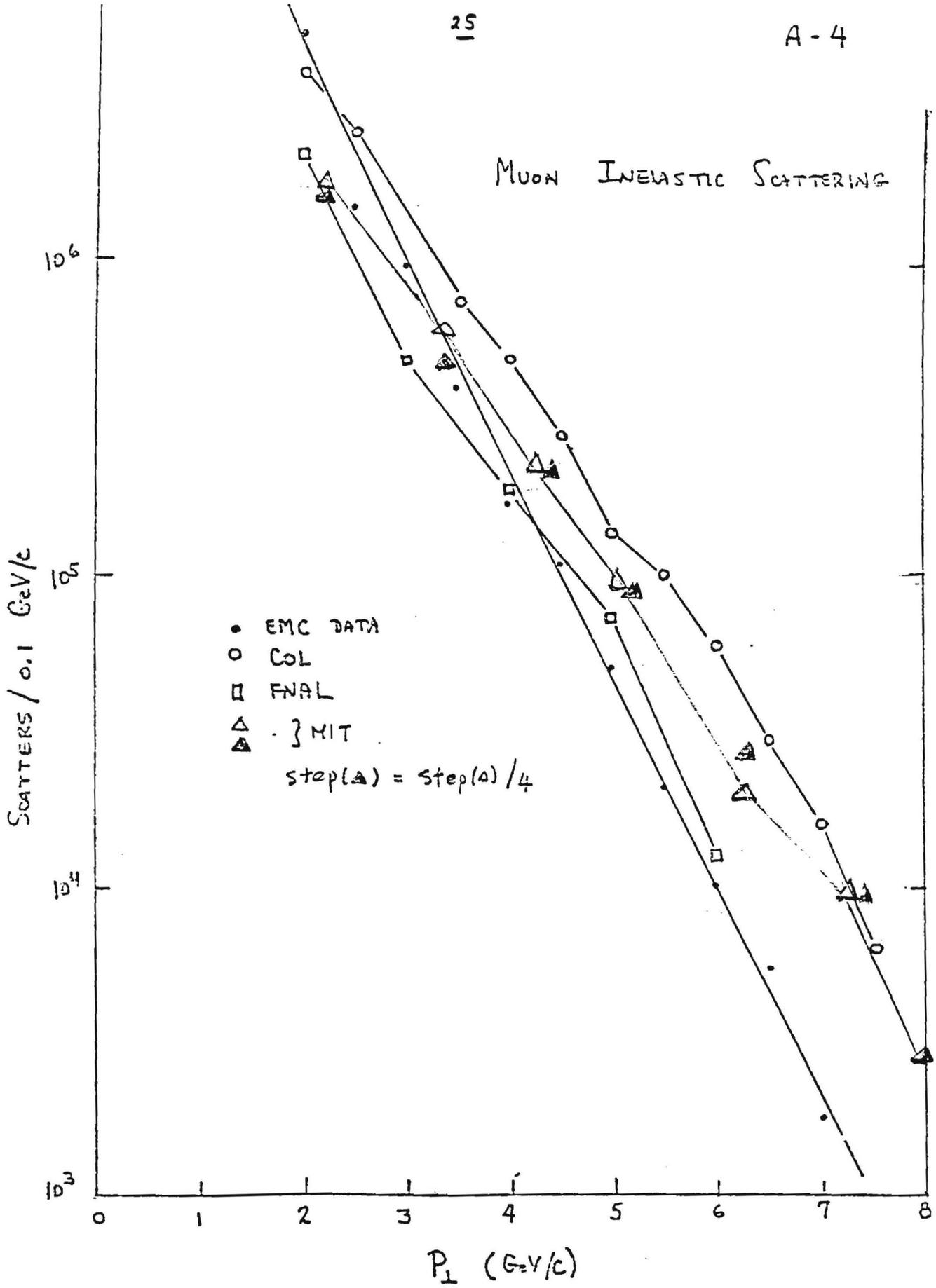
MUON INELASTIC SCATTERING
EMC DATA
COL
FNAL
MIT
step(▲) = step(△) / 4
SCATTERS / 0.1 GeV/c
10^6
10^5
10^4
10^3
0
1
2
3
4
5
6
7
8
$P_\perp$ (GeV/c)

IV. The E-613 Shield

The magnetized muon shield built for the beam dump experiment E-613 in the meson lab has some similarities to the shield we are designing for the prompt neutrino beam in the neutrino area. We felt that it would be a significant test of our programs to calculate the background muon fluxes in the E-613 shield and compare these to the actually measured muon fluxes. Such calculations have therefore been carried out using all three of the programs used in the neutrino area design for a variety of configurations of the E-613 shield. The agreement between the calculations and the measured fluxes is satisfactory for all three programs. In this section we describe these comparisons in some detail.

We have considered two different versions of this shield - the "Old Shield" used in the Spring 1981 run, and the "New Shield" used in the Spring 1982 run. In both versions the shield consisted of a magnetized iron front end followed by a passive iron shield. (See Figs. IV-1 and IV-2 for a sketch of these two versions). The magnetized part was the same for both versions and consisted of three magnets M1, M2, and the Hyperon magnet (10.4 meters total length) followed by two off axis "spoiler" magnets. The passive part was approx. 13 meters long in the 1981 shield and about 18 meters long in the 1982 shield. Between the passive shield and the detector there was another 3 m long but narrower piece of passive iron (called

the AVIS magnet) and 1.4 meters of concrete. Some parameters of these shields are summarized below

	1981 Shield	1982 Shield
Length of magnetized iron[a]	10.4 m	10.4 m
Total B x L	223 kgm	223 kgm
Total bending ΔP_t	6.7 Gev/c	6.7 Gev/c
Total length of iron[b]	24 m	29 m
Minimum energy loss in shield	35 Gev	42 Gev
Multiple scatt. (ΔP_t) rms proj.	0.56 Gev/c	0.62 Gev/c

a) Excluding spoiler magnets. b) Excluding spoiler magnets and AVIS iron

The muon flux measurements carried out with this shield are given in the May 4, 1982 note by S. Childress and B. Roe and a December 8, 1981 note by G.K. Fanourakis. The available data fall into four categories:

1. The muon anticounters (MUANTI) at the front face of the detector. They cover a total of 5 feet x 5 feet, consisting of five horizontal strips labeled A, B, C, D, E which are 5 feet wide by 1 foot high each. These give the total muon flux hitting the detector.

2. A probe counter (P counter) which is about 7" x 10" in size at the end of the passive iron shield ($\sim$31 meters from target in 1981, $\sim$36 meters from target in 1982) counting in coincidence with the MUANTI counters (called P• MUANTI).

The P counter was moved up and down at the end of the shield, but was always centered horizontally on the beam axis. The P. MUANTI coincidence gives the vertical distribution at the end of the passive iron for muons that hit the detector.
(See Figs. IV.3-6)

3. The singles counting rate with the P counters both at the end of the passive iron and in the plane of the front face of the detectors. In regions of very high counting rate these counts are probably related to the total muon flux. However in regions of low muon flux they may have substantial backgrounds, or may even be dominated by, hadronic or electromagnetic junk (they are singles counts in a 7" x 10" counter).

4. Muons seen in the E-613 detector in the time gate of a neutrino event trigger (called "stale muons"). These muons must have at least 1.1 Gev to be detected, and about 5 Gev to traverse the whole detector. Thus the muon flux between 1.1 and 5 Gev and the flux above 5 Gev in the detector are available.

Due to an error in stacking at the time when the 1981 shield was modified to the new 1982 configuration, too much iron (by 6 blocks) was placed on top of the passive iron shield. In this position the extra 6 blocks intercepted the very high flux of deflected muons, multiple scattered some of them into the detector, and thus increased the flux of muons in the detector. These blocks were then removed when the error was discovered, and the muon flux decreased by the expected factor of five or so.

The fluxes were measured with all 6 blocks on, 4 of these blocks off, and finally with all six blocks off. In addition, the muon fluxes were measured by the E-613 group with the incident proton beam pitched upward by 4 milliradians ("PITCH ON" data), which was their usual running condition, and also with the incident protons at 0 milliradian (i.e. "PITCH OFF" data). Thus there exists a large amount of measured muon flux data under a large variety of conditions, i.e. the original 1981 configuration, the final 1982 configuration (with all 6 blocks off), and the two intermediate configurations (with all 6 blocks on, and with 4 blocks off, 2 on), each of these with the proton beam at 0 mrad and 4 mrad. We have calculated the expected muon fluxes for each of these configurations with each of the three programs (i.e. Columbia, Fermilab, and MIT) independently. The large variety of different conditions provided a fairly thorough check of the calculations.

The results of the calculations for the total muon fluxes (sum of μ^+ and μ^-) are compared with the E-613 measurements in Table IV-1. The first column of the Table gives the measured fluxes, and columns 2, 3, and 4 give the fluxes calculated by the three programs. We see that the calculations are within a factor of two of each other and the measurements for all of the various conditions for which measurements are available. We consider this very satisfactory agreement.

The calculations of the vertical distribution of the muon flux at the end of the passive iron (for muons that also hit the detector) are compared with the P. MUANTI coincidence counts in Figures IV - 3 to IV - 6. Finally, the calculations for the vertical and horizontal distribution of the total muon

flux in the plane of the front face of the detector are compared with the corresponding P singles measurements in Fig IV - 7 and IV - 8. The agreement between the calculations and the measurements is within a factor of 3 or so even in these detailed distributions, which we consider quite satisfactory.

However, a few comments about the precision of the agreement that can be expected might be useful.

a) The precision of the measured fluxes can be estimated by looking at the internal consistency of the measurements.

For example, consider the "PITCH OFF" data with the incident protons at 0 mrad to the horizontal. Since the 613 detector is vertically centered 30 cm above the horizontal axis, with the incident protons at 0 mrad the high energy end of the muons (300 to 400 Gev) clip the upper edge of the detectors. From the simple geometry of the situation we see that these muons pass the end plane of the passive iron shield (at 36 meters from the target) in a narrow region around 6 feet above the floor (see Fig. IV - 9). Such a peak is indeed observed and can be seen in Figs. IV - 4,5,6. However both the magnitude and the position of this peak at 6 feet should be independent of the number of steel blocks above 9 feet on top of the shield. But the measured peak in Figs III - 4 to 6 (Figures 9, 10, and 11 of the May 4, 1982 note by Childress and Roe) vary by a factor of two in magnitude and 6" in position. We thus conclude that the precision (normalization, position, etc.) of the P. MUANTI measurements are no better than a factor of two in magnitude and 6" in position.

Another example worth looking at is the horizontal distribution of the muons above the detector (Fig. III - 8, or Fig. 13 of the May 4, 1982 report by Childress and Roe) which shows a sharp peak about 20" off center. However, all of the relevant components of the beam and shield are claimed to be centered horizontally, so therefore our programs calculate a peak of magnitude comparable to the observed peak but centered horizontally. This indicates that either the placement of some of the shield or beam components or the position accuracy of the E-613 flux measurement are off by as much as 20".

b) In a detailed comparison of the inner workings of the three muon flux programs, we tried to separate the effects of the initial muon production rates in the dump from the calculation of the transmission of the shield. We define the transmission ratio at a particular set of initial values of the total momentum P and the transverse momentum P_t as the fraction of muons (produced in the dump at that P and P_t) that end up in the detector. This ratio is clearly independent of the number of muons produced at that P and P_t. Figs. IV - 10 and IV - 11 show the comparisons of the three programs at a few values of P and P_t. The agreement is well within a factor of two.

The three programs use different parametrizations of the pion production rates and of the μ/π ratios in the dump, as discussed in section II of this report. The agreement between these parametrizations is not better than a factor of two. We therefore believe that the differences between the fluxes cal-

culated by the three programs are mainly due to the muon production formulas and not because of differences in calculating what muons do in the shield.

In view of the above comments about the precision of the muon flux measurements, the positioning of the elements of the shield, and the uncertainties of the muon production formulas, we believe that the agreement between our calculations and the actually observed muon fluxes are quite satisfactory, both in the total fluxes and the detailed flux distributions.

In last years' progress report we stated that our program calculated a muon flux a factor of 8 lower than the rate observed in the Spring 1981 run. After some study the lower estimate was traced to two factors. One was the fact that the return field of the hypron magnet was entered incorrectly in the program. When this error was corrected the calculated flux increased by a factor of two. The remaining factor was due to the fact that the muon production formula used at that time neglected A dependent effects and the increased muon production due to the hadronic cascade in the beam dump target. Improved estimates of these two effects led to the present flux predictions.

Another point worth noting is that the factor of 5 decrease in the muon background flux in the E-613 detector due to the additional 5 meters of passive iron (the main change from the 1981 shield to the final 1982 shield configuration) was predicted

by one of our programs before the shield was restacked and the reduced flux was measured. It gives us more confidence in our programs that they are not only able to explain fluxes after the observed rates are known but they can predict what will happen in some new configuration before the flux measurements are made. In addition, the set of muon measurements with full density tungsten target and the final shielding configuration was made after our muon flux predictions were made available for that configuration. The agreement is again satisfactory.

TABLE IV - 1

E-613 Shield Muon Flux Comparisons

	Observed Flux	Columbia Program	Fermilab Program	MIT Program
1. Old Shield (1981)				
Total MUANTI	47,500	56,000	40,000	58,500
$P\mu \geq 1.1$ GeV/c	25,000	34,000		
Counter A	15,053	19,500	10,300	18,000
B	11,048	1,200	5,200	12,500
C	9,171	10,600	6,500	9,500
D	7,035	11,500	10,300	9,000
E	7,336	13,800	7,700	9,500
2. New Shield (1982)				
6 Blocks ON	58,000		48,000	53,000
4 Blocks OFF, 2 ON	29,000			20,000
Final (All 6 Blocks OFF)	10,400	6,200	5,400	8,000

NO. 341-20 DIETZGEN GRAPH PAPER
20 X 20 PER INCH
DIETZGEN CORPORATION
MADE IN U.S.A.

E613 SHIELD - OLD(1981) AND NEW(1982) VERSIONS

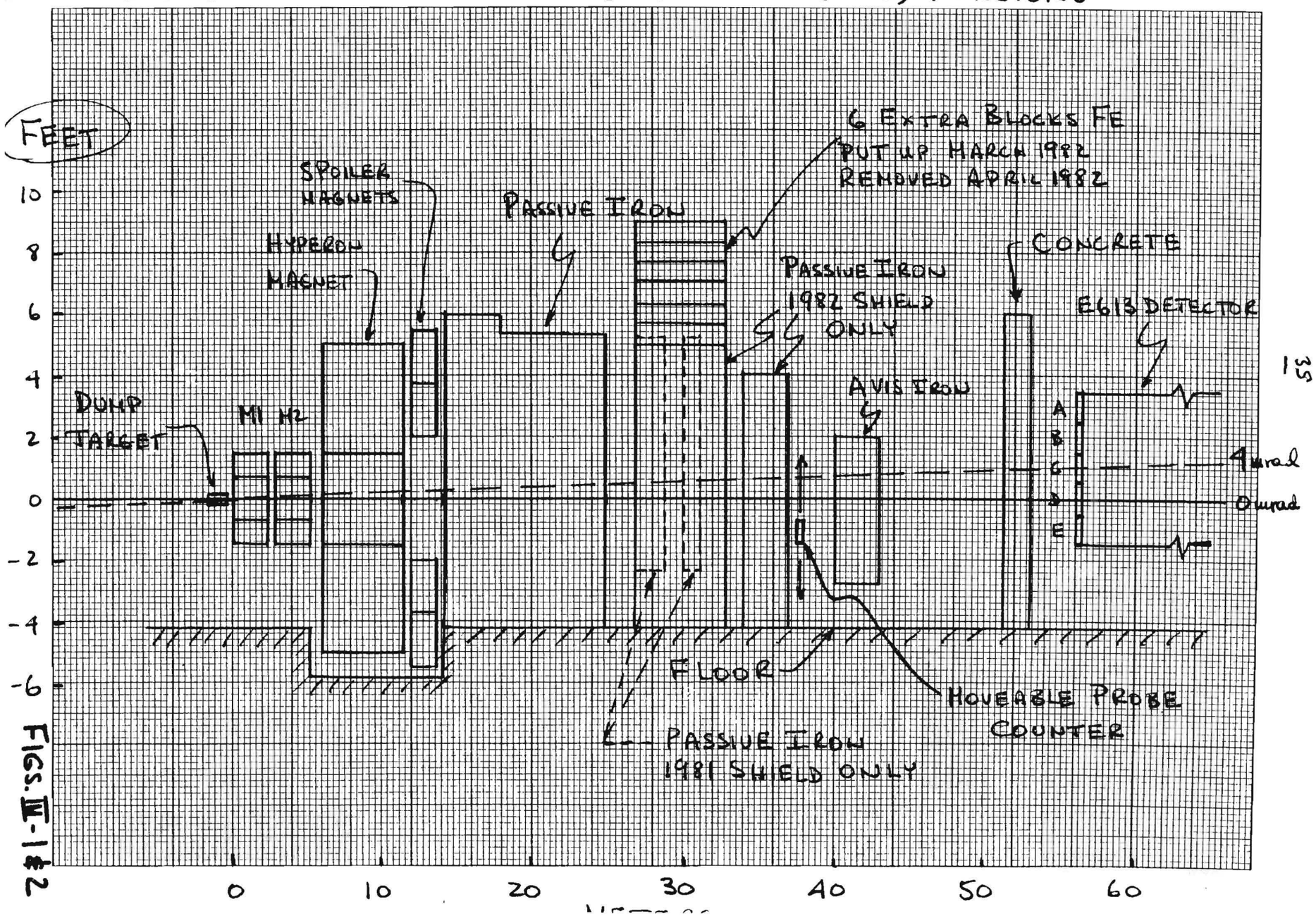

FIGS. III-1&2

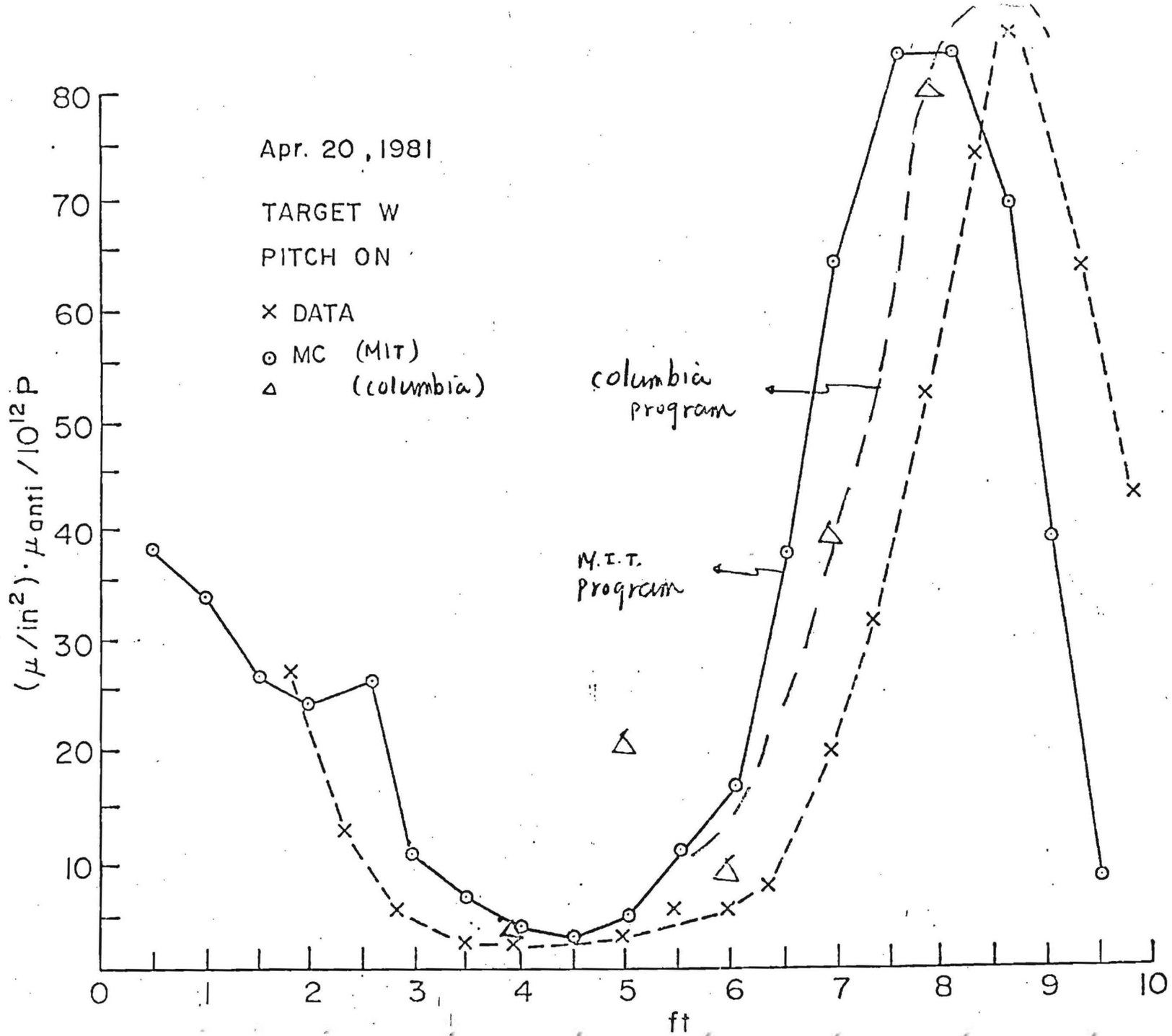
Apr. 20, 1981
TARGET W
PITCH ON
× DATA
⊙ MC (MIT)
△ (columbia)
columbia program
M.I.T. Program
$(\mu/in^2)\cdot\mu_{anti}/10^{12}p$
ft
0
1
2
3
4
5
6
7
8
9
10
10
20
30
40
50
60
70
80

Fig. IV-3

S Oh (M.I.T.)

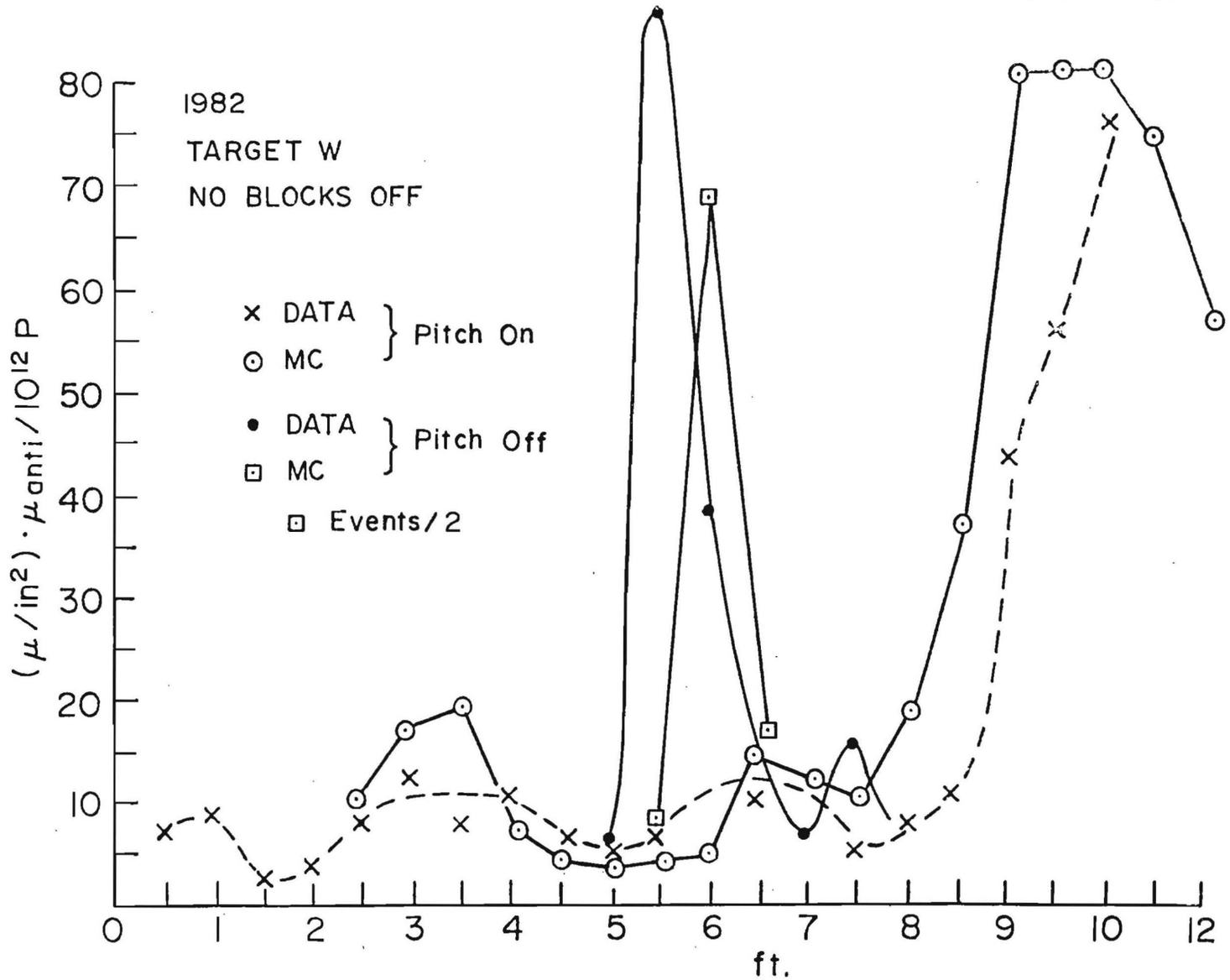

Fig. IV-4

Seog Oh (MIT)

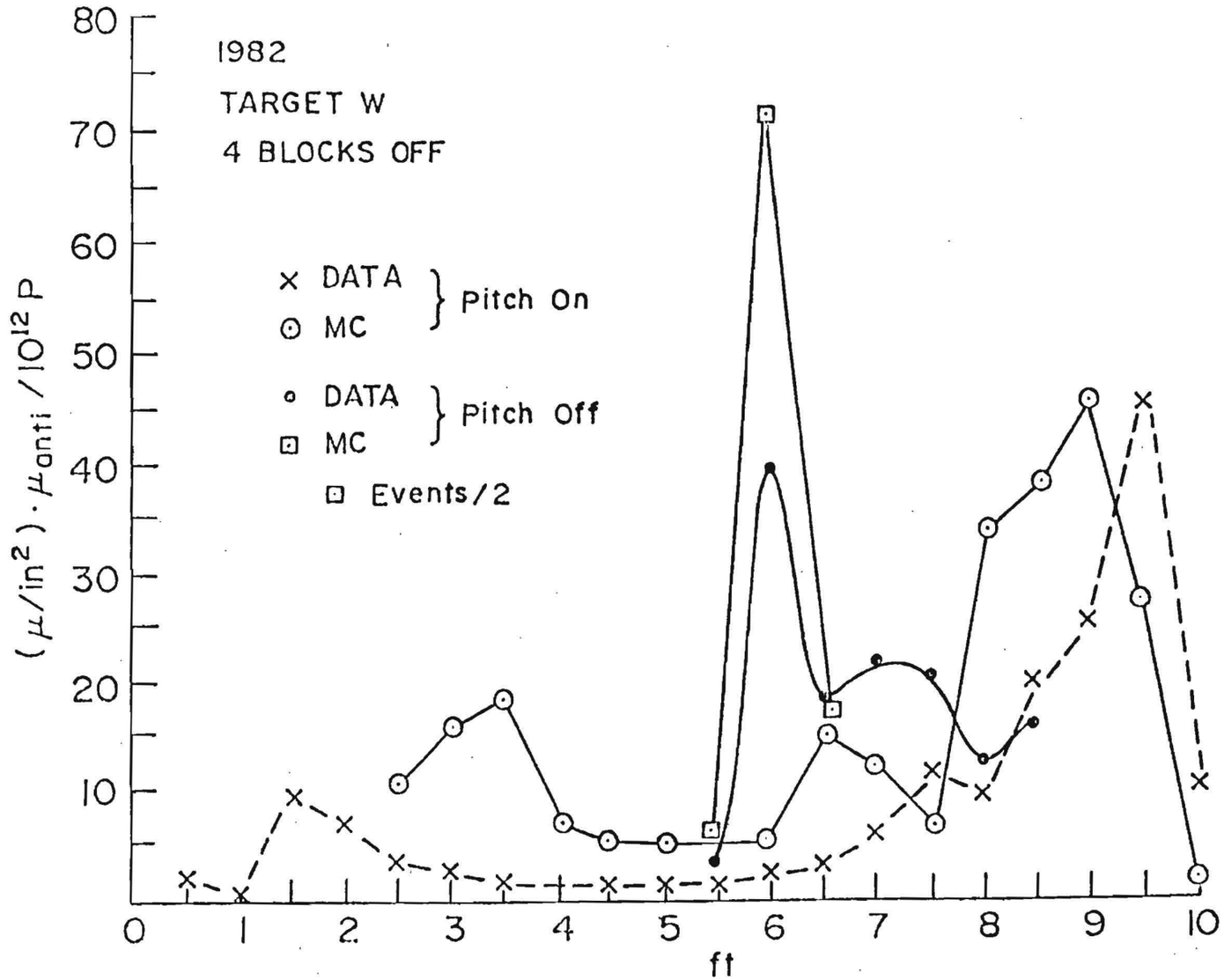

Fig IV-5

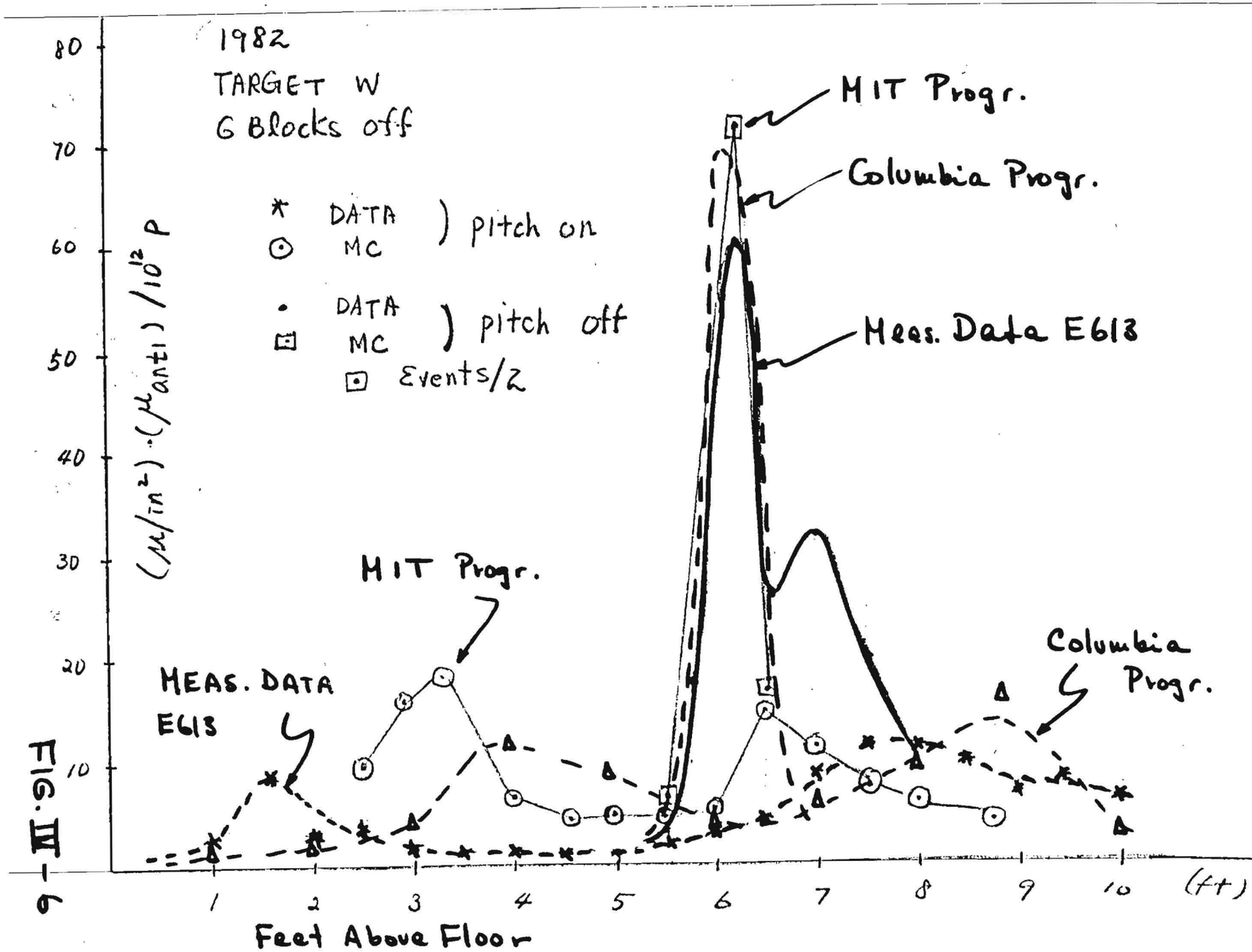
1982
TARGET W
6 Blocks off
* DATA
⊙ MC
) pitch on
• DATA
⊡ MC
) pitch off
⊡ Events/2
MIT Progr.
Columbia Progr.
Meas. Data E613
MIT Progr.
MEAS. DATA
E613
Columbia
Progr.
$(\mu/in^2)\cdot(\mu_{anti})/10^{12}$ P
80
70
60
50
40
30
20
10
1
2
3
4
5
6
7
8
9
10
(ft)
Feet Above Floor

FIG. III-6

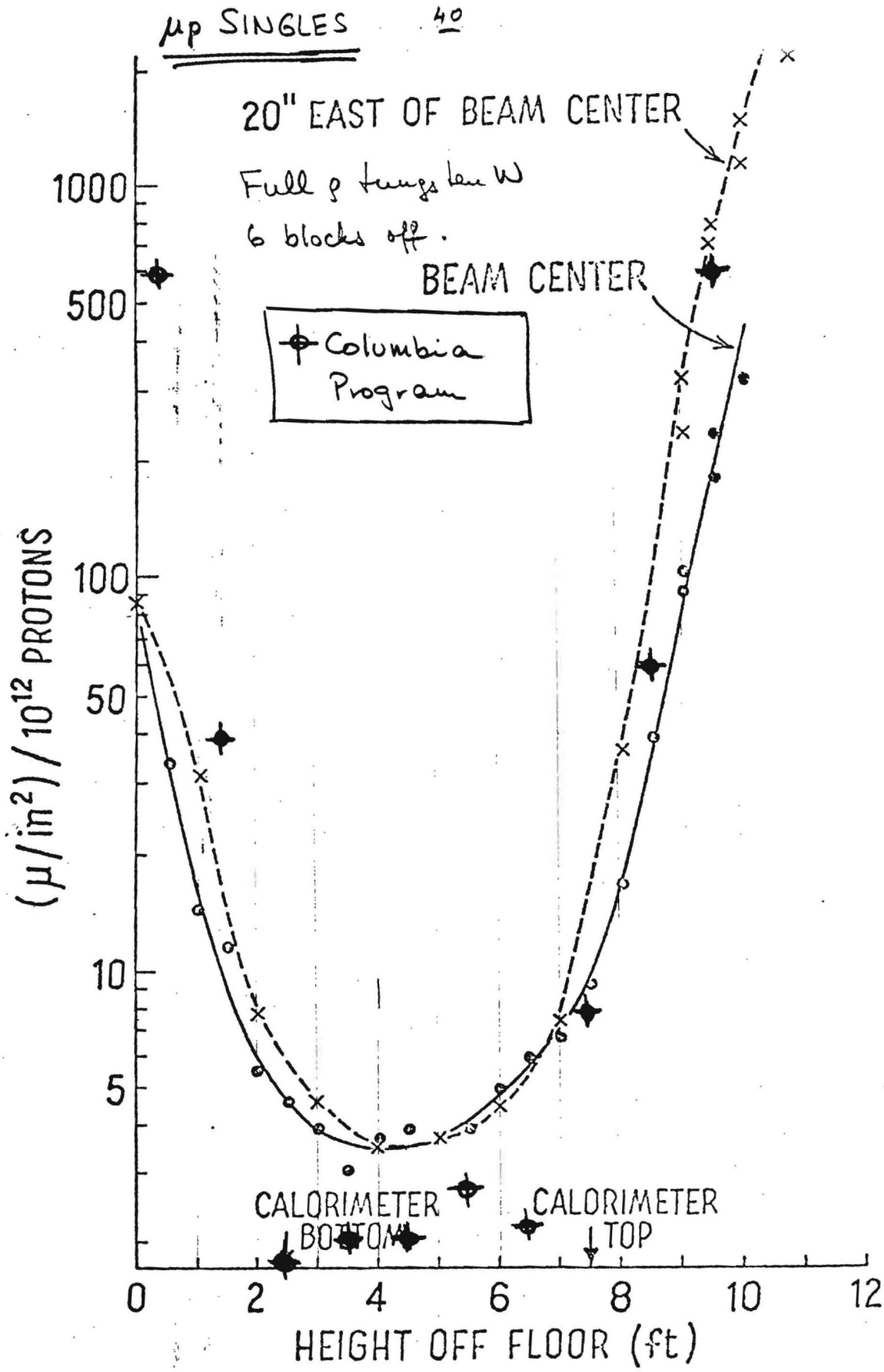

Figure 12

FIG. IV-7

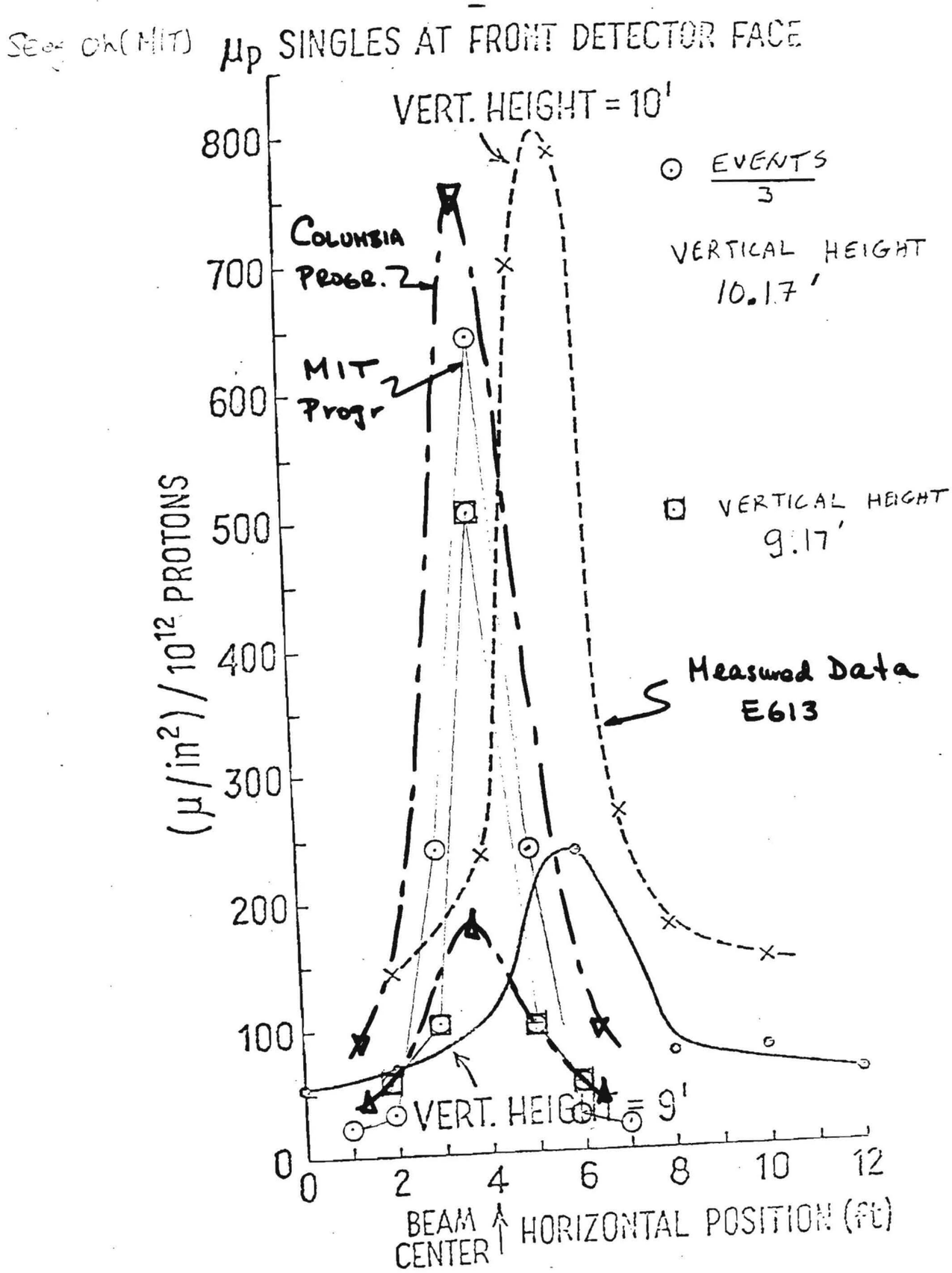

FIG. IV-8

Figure 13

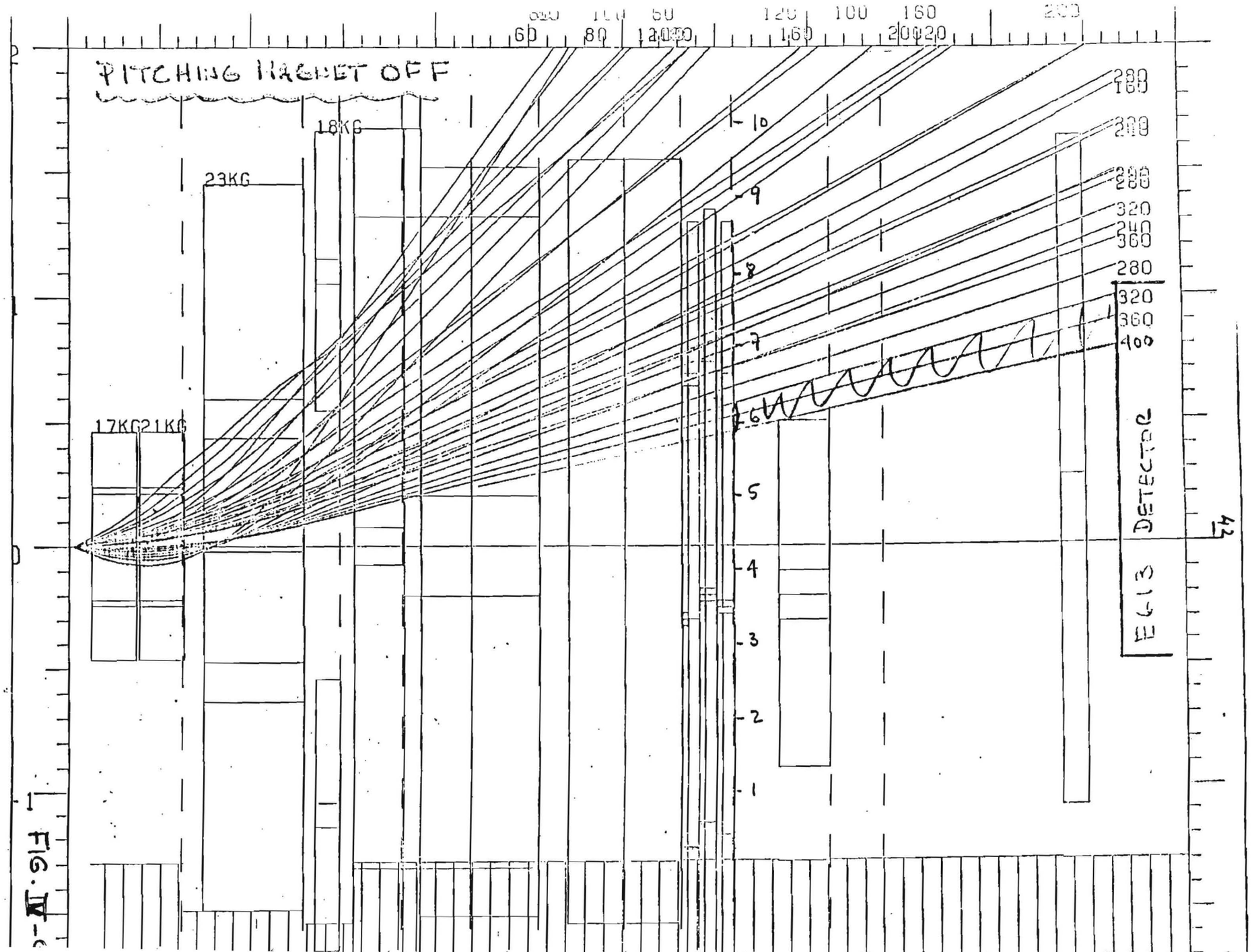

FIG. II-6

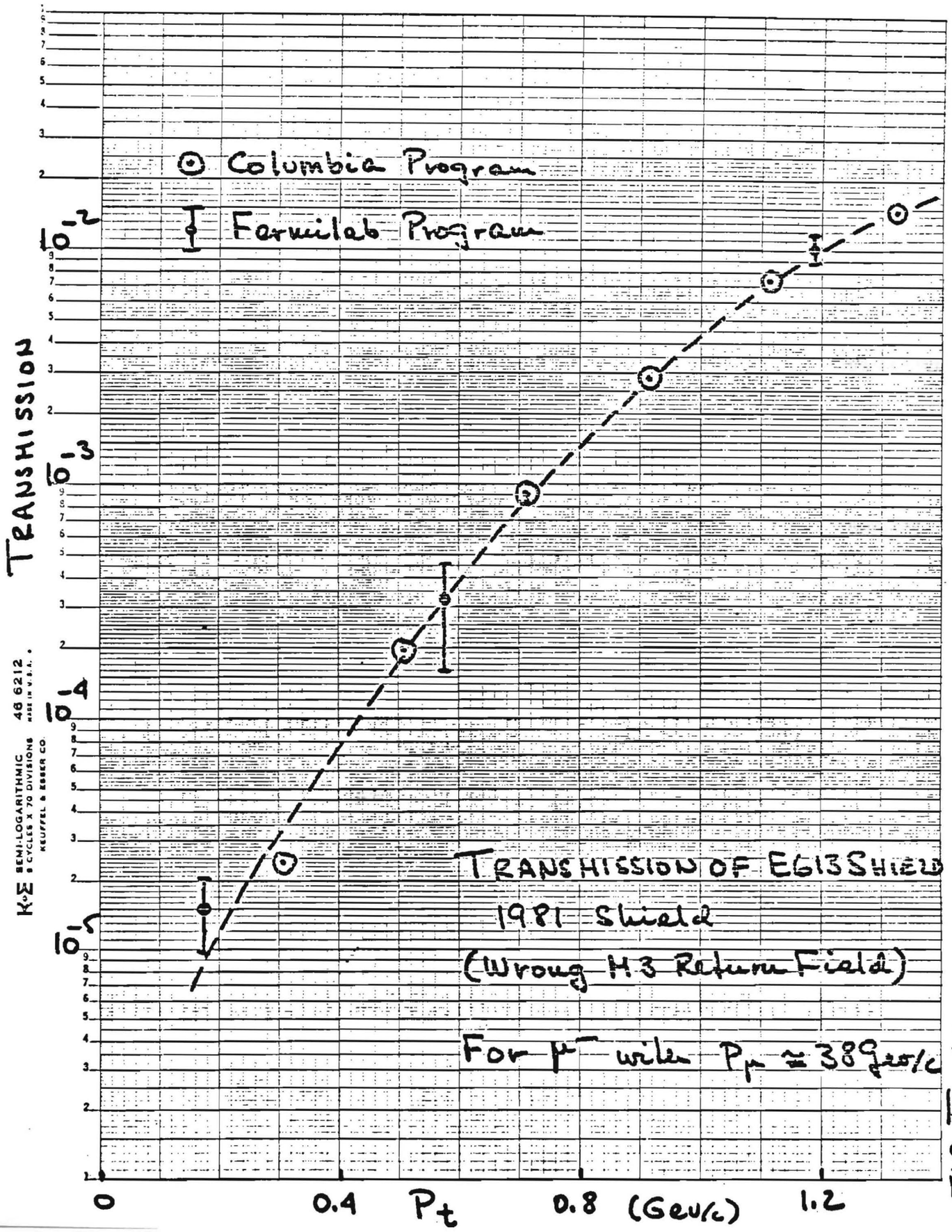
Columbia Program
Fermilab Program
TRANSMISSION
10^{-2}
10^{-3}
10^{-4}
10^{-5}
TRANSMISSION OF E613 SHIELD
1981 Shield
(Wrong H3 Return Field)
For μ^- with $P_\mu \cong 38$ GeV/c
0
0.4
P_t
0.8
(GeV/c)
1.2
K+E SEMI-LOGARITHMIC 46 6212
5 CYCLES X 70 DIVISIONS MADE IN U.S.A.
KEUFFEL & ESSER CO.

FIG. III-10

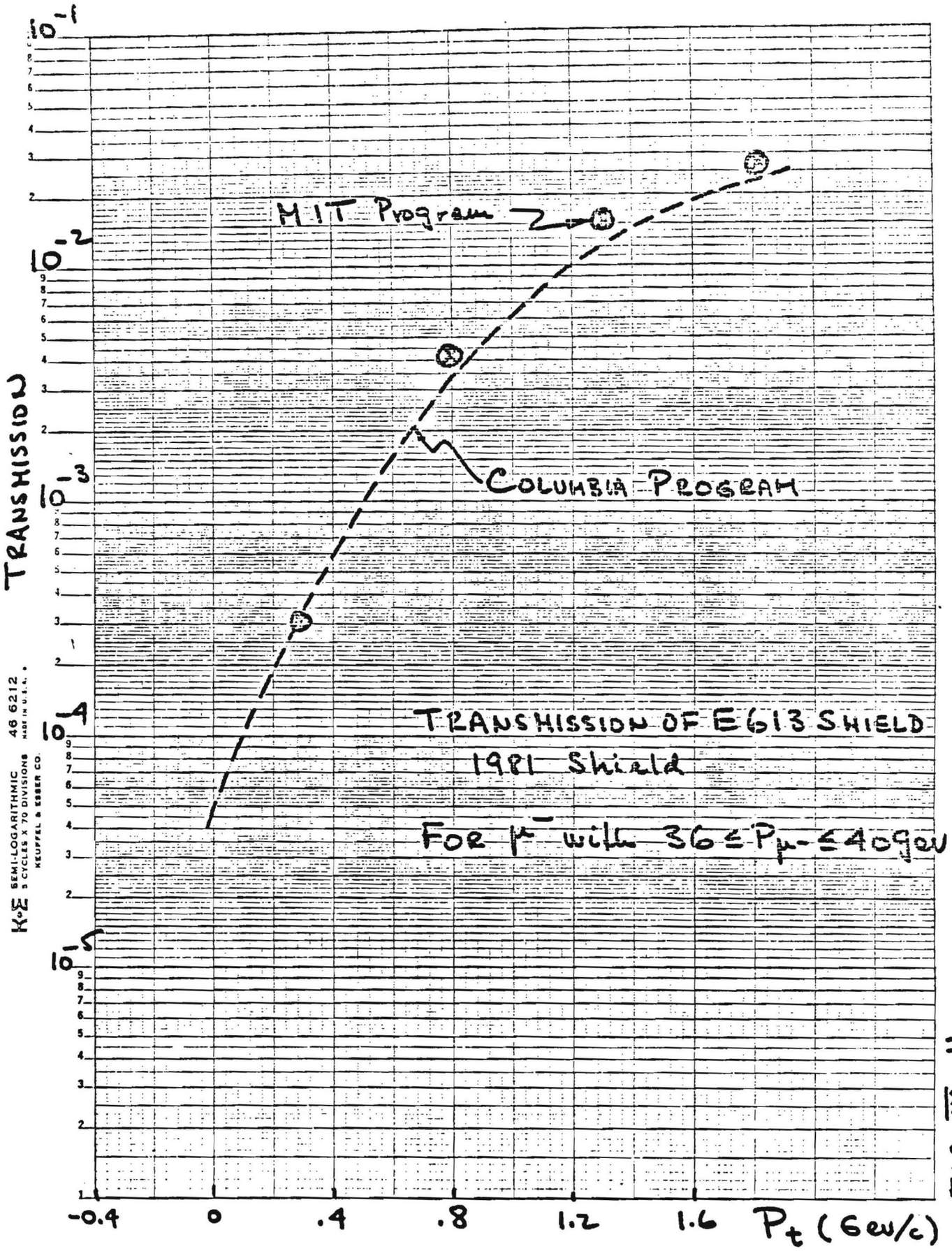
TRANSMISSION
10^{-1}
10^{-2}
10^{-3}
10^{-4}
10^{-5}
MIT Program
COLUMBIA PROGRAM
TRANSMISSION OF E613 SHIELD
1981 Shield
For μ^- with $36 \le P_{\mu^-} \le 40$ GeV
-0.4
0
.4
.8
1.2
1.6
P_t (GeV/c)
K+E SEMI-LOGARITHMIC 46 6212
5 CYCLES X 70 DIVISIONS MADE IN U.S.A.
KEUFFEL & ESSER CO.

FIG. III-11

Appendix

Muon Production Formulae

1. The Muon Flux Formulae

a. The Columbia program started with the $\pi^{\pm}$ production formula obtained from a fit to the low $P_{\perp}$ data by Taylor and Walker:

$$E \frac{d\sigma}{d^3p} = C \frac{(1-x_R)^n}{(1+P_{\perp}^2/m^2)^4} \quad \text{mbarns/GeV/c}^2\text{/nucleon}$$

where $x_R \cong (1-x-P_{\perp}^2/2P_{||})$

and

	c	m^2	n
π^+	30.2	0.66	3.2
π^-	17.4	0.74	3.9

To obtain numbers of particles produced per interacting proton we correct for the fact that the total cross section goes like $A^{0.7}$ while high $P_{\perp}$ and large x π and μ production goes more like $A^{1.0}$

$$dn/dxd^2P_{\perp} = C \times \frac{A^{0.3}}{40 \text{ mb}} \frac{1}{x} (E \frac{d\sigma}{d^3p}) \quad .$$

These formulae were then multiplied by the μ/π ratios to obtain the μ fluxes. This ratio came from two processes:

i) Prompt muon production in the first collision of the proton (we call these direct 1 μ's). A fit to the experimental data (see Fig. A1) gives

$$\mu/\pi|_{\text{prompt}} = (1.0 \times 10^{-4})(1-x)^3 \quad .$$

ii) In a thick target we get additional muons from π and K decays in the hadronic cascade as well as additional prompt muons produced in the interactions of the pions in the hadronic cascade. These fluxes were calculated by a Monte Carlo program in which the hadronic cascade was followed and the muon flux from both prompt and decay sources were calculated. The resulting muon fluxes were then fitted to give (see Fig A1b)

$$\left.\frac{\mu}{\pi}\right|_{\substack{\text{Decays \& prompt}\\ \mu\text{'s in hadronic}\\ \text{cascade}}} = \left(\frac{350}{E_{prot}}\right)\left[(1.0\times10^{-4})(1-x)^3+(8.0\times10^{-4})e^{-23x}\right].$$

Combining these we get

$$\frac{dn\mu^+}{dxd^2p_\perp} = \frac{30.2\ A^{0.3}}{40}\ \frac{1}{x}\ \frac{(1-x_R)^{3.2}}{(1+P_\perp{}^2/0.66)^4}\ x\left\{\left[1.0\ \times\ 10^{-4}(1-x)^3\right]\right.$$

$$\left. +\ \left(\frac{350}{E_{prot}}\right)\left[1.0\ \times\ 10^{-4}(1-x)^3+8.0\ \times\ 10^{-4}e^{-23x}\right]\right\}$$

and similarly for π^-. We see that once we get to $x \geq 0.1$ or so where the e^{-23x} is unimportant we have dependences like

$$\sim \frac{(1-x)^{6.2}}{(1+P_\perp{}^2/m^2)^4} \quad \text{for } \mu^+$$

$$\sim \frac{(1-x)^{6.9}}{(1+P_\perp{}^2/m^2)^4} \quad \text{for } \mu^- \quad .$$

b. The Fermilab program used the $\pi^\pm$ production formula

$$E\frac{d\sigma(\pi^+)}{d^3p} = 70\ \frac{e^{-7x_R}}{(1+P_\perp{}^2/m^2)^n}$$

where

$$m^2 = 0.1 + 3.2\ x_R - 1.3\ x_R{}^2$$

$$n = 3.5 + (8x_R - 4x_R{}^2 - 0.5)\left(\frac{0.35}{1+e^{(P_\perp - 9.6)/1.8}} + 0.65\right)$$

$$\pi^-/\pi^+ = 1/(1.7+2.2\ x_\perp{}^2+9.1\ x_F{}^2)$$

$$\left.\frac{d\sigma}{d^3p}\right|_A = (A^{0.8-0.3x_F+0.15P_\perp})\ \left.\frac{d\sigma}{d^3p}\right|_{A=1}$$

The μ/π ratio was fitted to existing data (for the prompt part) and π and K decay contributions were calculated by a Monte Carlo program and then fitted, to yield

$$\left.\frac{\mu}{\pi}\right|_{prompt} = 10^{-4}(-1.91+0.88\ \log E_{cm})\left(\frac{A}{56}\right)^{0.2}(1-x_F)^2$$

The contributions from the hadronic cascade were expressed as

$$\left.\frac{\mu}{\pi}\right|_{hadronic\ shower} = (R_{decay}+R_{direct})\ \left.\frac{\mu}{\pi}\right|_{prompt}$$

$$R_{direct} = 1 + (0.115/(E/E_{beam}))^{1.5}$$

$$R_{decay} = 1 + (0.175/(E/E_{beam}))^{1.81}$$

c. The MIT program used a formula for muon production directly, based on a fit to the muon production data by W. Busza.

$$E\frac{dn\mu}{d^3p} = A(1-x)\frac{(1-x-P_\perp^2/2P_{||})^4}{(1+P_\perp^2/0.74)^{3.5}}$$

where $A = 6 \times 10^{-4}$ μ's/proton/GeV/c^2 for π^+ at 1000 GeV/c

$A = 4 \times 10^{-4}$ μ's/proton/GeV/c^2 for π^- at 1000 GeV/c

From calculating the E613 shield we found that this formula overestimated the μ flux at large x as well as at large $P_\perp$. The formula was therefore modified to

$$E\frac{dn\mu}{d^3p} = A\frac{(1-x_R)^6}{(1+P_\perp^2/0.74)^4} \quad \text{for } P_\perp < 3 \text{ GeV/c}$$

$$= A\frac{(1-x_R)^7}{(1+P_\perp^2/0.74)^4} \quad \text{for } P_\perp \geq 3 \text{ GeV/c} \quad .$$

The MIT formula ~~are~~ is intended to be valid for thick targets (dumps).

The predictions of the 3 formulae at 1000 GeV are compared in Fig. A7.

2. Comparison of the Muon Production Formulae with Measured Data.

a. The most relevant data for the total muon production is the data of Bodek, Ritchie et al. In this experiment, the total $\mu^\pm$ production rate was measured with 350 GeV protons in an iron beam dump. Jack Ritchie was very kind to supply us with this data before corrections were subtracted for π,K decays, etc. These numbers then can be directly compared to the total muon rates from our formulae, which is the quantity that is relevant to us. His numbers were for 6.038×10^8 protons interacting in the dump. He thought that the data were reliable for the region $P_\mu \geq 50$ GeV and $P_\perp \geq 0.6$ GeV/c.

The comparison for the x dependence is shown in Fig. A2a,b and the $P_\perp$ dependence in Fig. A3a,b. We see that the agreement is not bad, with the Columbia formulae overestimating by a factor of typically 1.5, and the MIT formula by ~ 2. But, note the data is for iron and the MIT prediction is for tungsten. Since the formulae predict more than the data, our calculations using these formulae will be conservative since we will calculate more background than we should actually have.

b. The comparison with the Bodek, Ritchie et al data is very reassuring. It covers a fairly large range in x, out to x = 0.63. However, it is limited to $P_\perp \leq 2.2$ GeV/c. To check the high $P_\perp$ fluxes, we compared with the CERN ISR data on π^0 production in the CCOR experiment out to $P_\perp \sim$ 14 GeV/c. The comparison of these data with the Taylor-Walker formula for π production used in the Columbia and the Fermilab program is shown in Figs. A4 and A5. The agreement is quite good at low $P_\perp$ (as it should be) but at $P_\perp \sim 10$ GeV/c, which is the highest $P_\perp$ that may be relevant in the muon shield calculations, the formula overestimates the measured cross sections by a factor of 5 or so (at $\sqrt{s} = 53$, which is similar to the Tevatron). Again, the calculations using this formula are then conservative since they overestimate the background. The formula used in the Fermilab program agree well with the data.

c. The highest $P_\perp$ muon production data that we could find was that of Cronin et al. This was for inclusive μ^+ production by 300 GeV protons. The data available is for the prompt μ^+ production in a thin nuclear target, corrected

for μ's from π and K decay. The comparison with the prompt μ cross section from the formula used in the Columbia program is shown in Fig. A6. The agreement is good at low $P_\perp$ but the formula overestimates the measured cross section by almost an order of magnitude at $P_\perp \sim 6$ GeV/c. The MIT formula for the total μ^+ cross section is also shown (the prompt and the decay contributions cannot be separated in this formula) and is larger than the measured data. Thus the calculations based on these formulae can be expected to be conservative at high $P_\perp$. The formula used in the Fermilab program agrees very well in shape but the normalization is slightly low (but within a factor of two or so of the data).

EXPTL. MEASUREMENTS OF THE μ/π RATIO

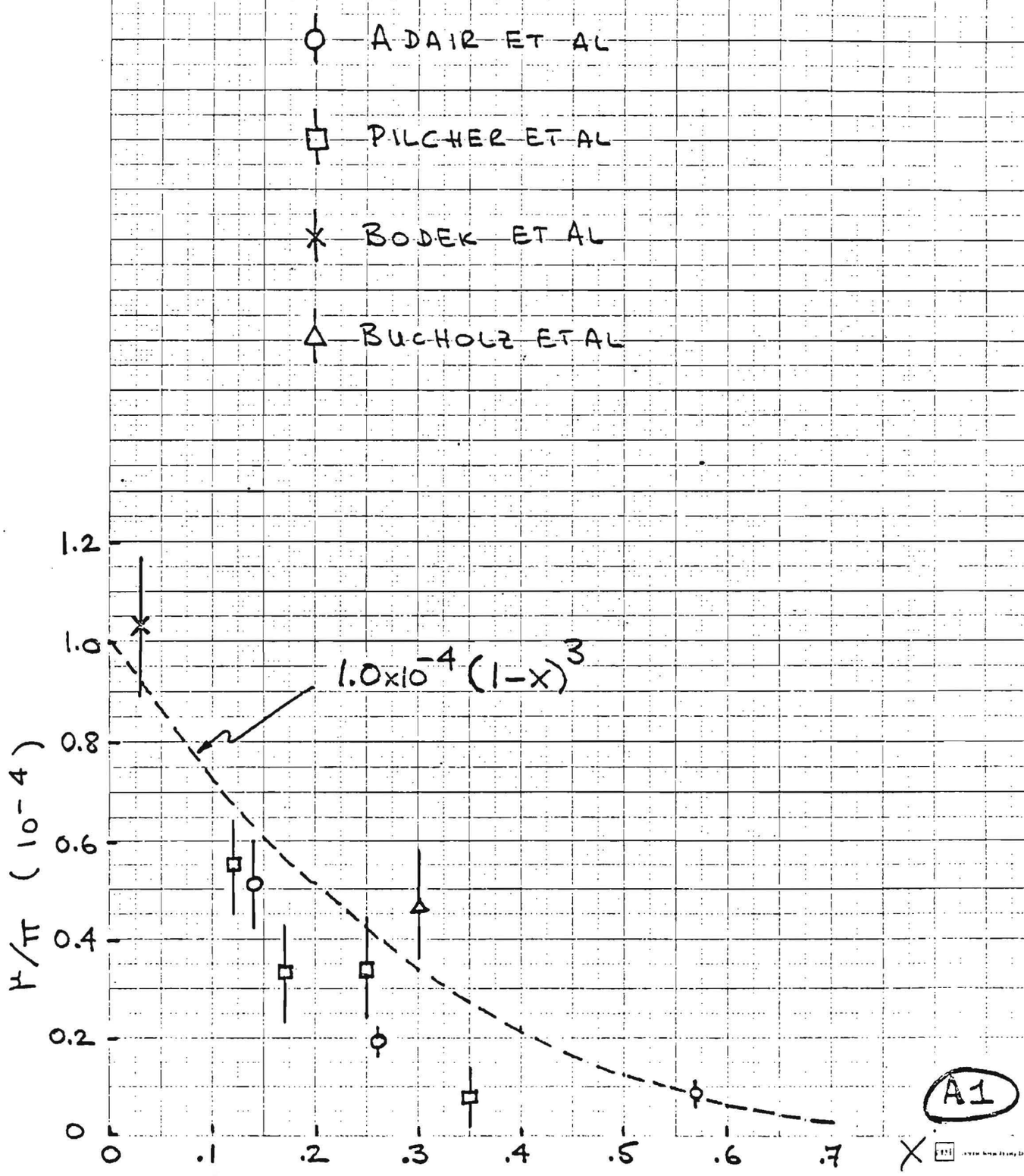

A1

Oct 20, 82

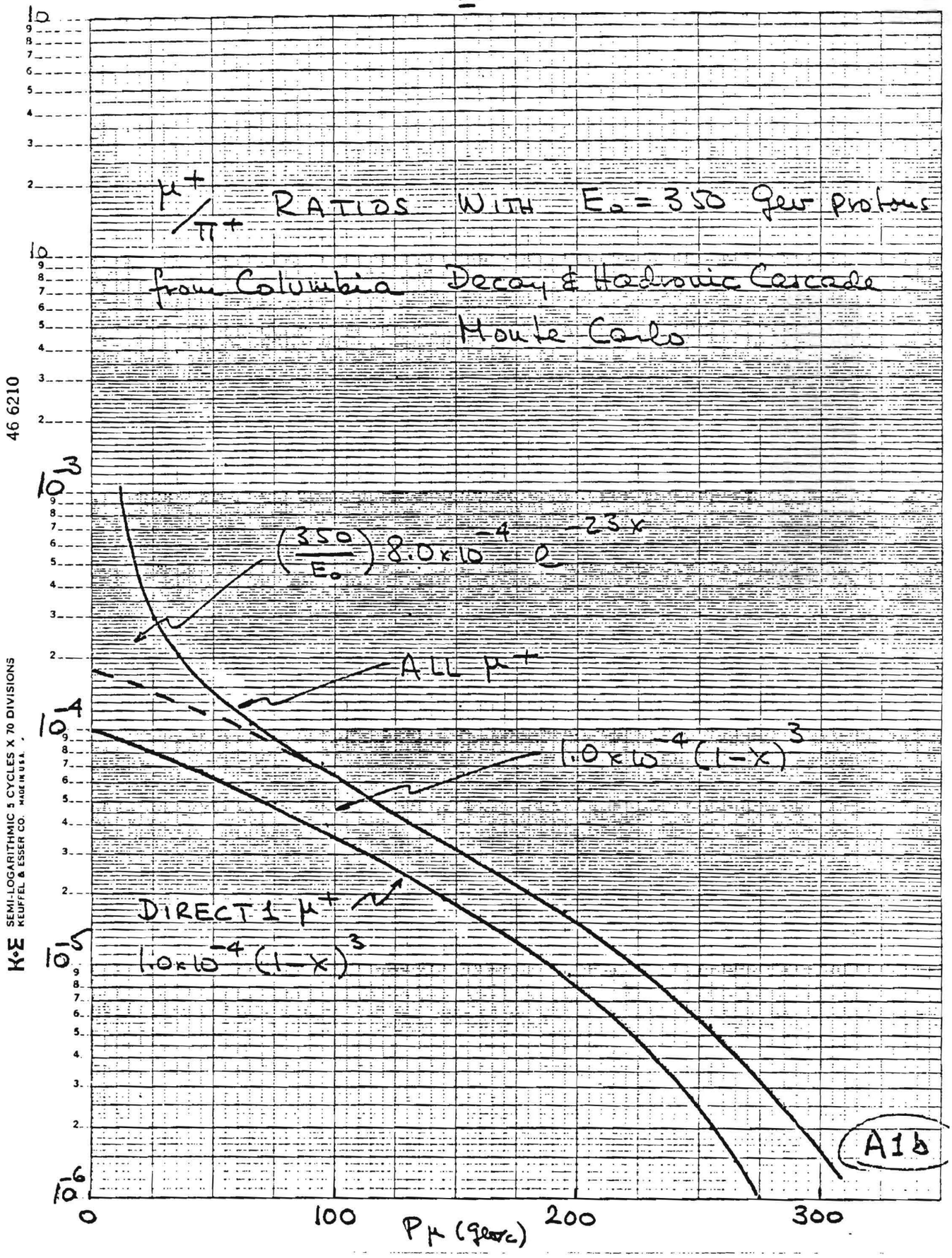
μ^+/π^+ RATIOS WITH $E_0 = 350$ GeV protons
from Columbia Decay & Hadronic Cascade Monte Carlo
$\left(\frac{350}{E_0}\right) 8.0\times10^{-4}\, e^{-23x}$
ALL μ^+
$1.0\times10^{-4}(1-x)^3$
DIRECT 1 μ^+
$1.0\times10^{-4}(1-x)^3$
A1b
10^{-3}
10^{-4}
10^{-5}
10^{-6}
0
100
200
300
P_μ (GeV/c)
46 6210
K+E SEMI-LOGARITHMIC 5 CYCLES X 70 DIVISIONS
KEUFFEL & ESSER CO. MADE IN U.S.A.

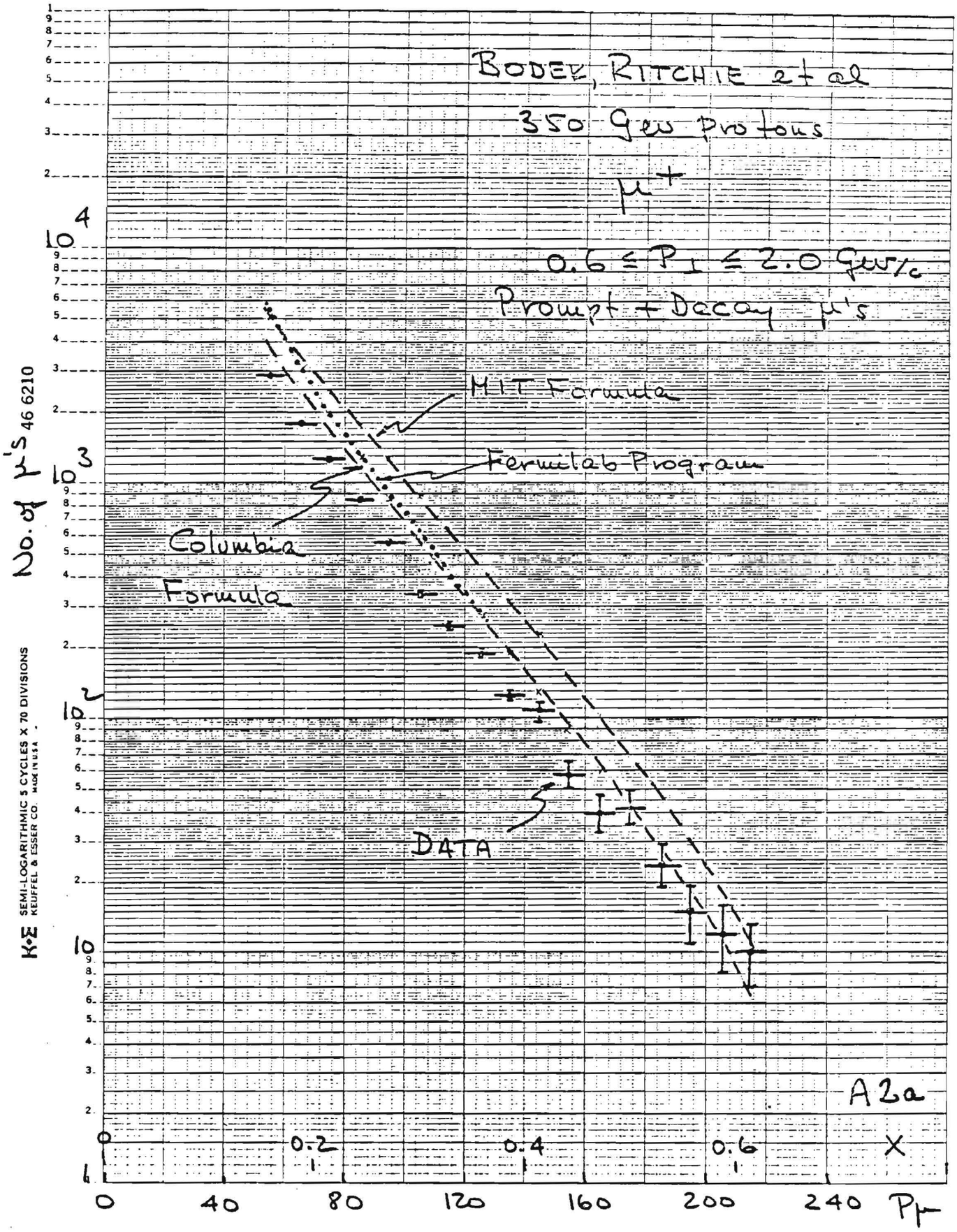
BODEK, RITCHIE et al
350 GeV Protons
μ+
0.6 ≤ P⊥ ≤ 2.0 GeV/c
Prompt + Decay μ's
MIT Formula
Fermilab Program
Columbia Formula
DATA
No. of μ's
A2a
0
0.2
0.4
0.6
X
0
40
80
120
160
200
240
P⊥
K+E SEMI-LOGARITHMIC 5 CYCLES X 70 DIVISIONS
KEUFFEL & ESSER CO. MADE IN U.S.A.
46 6210

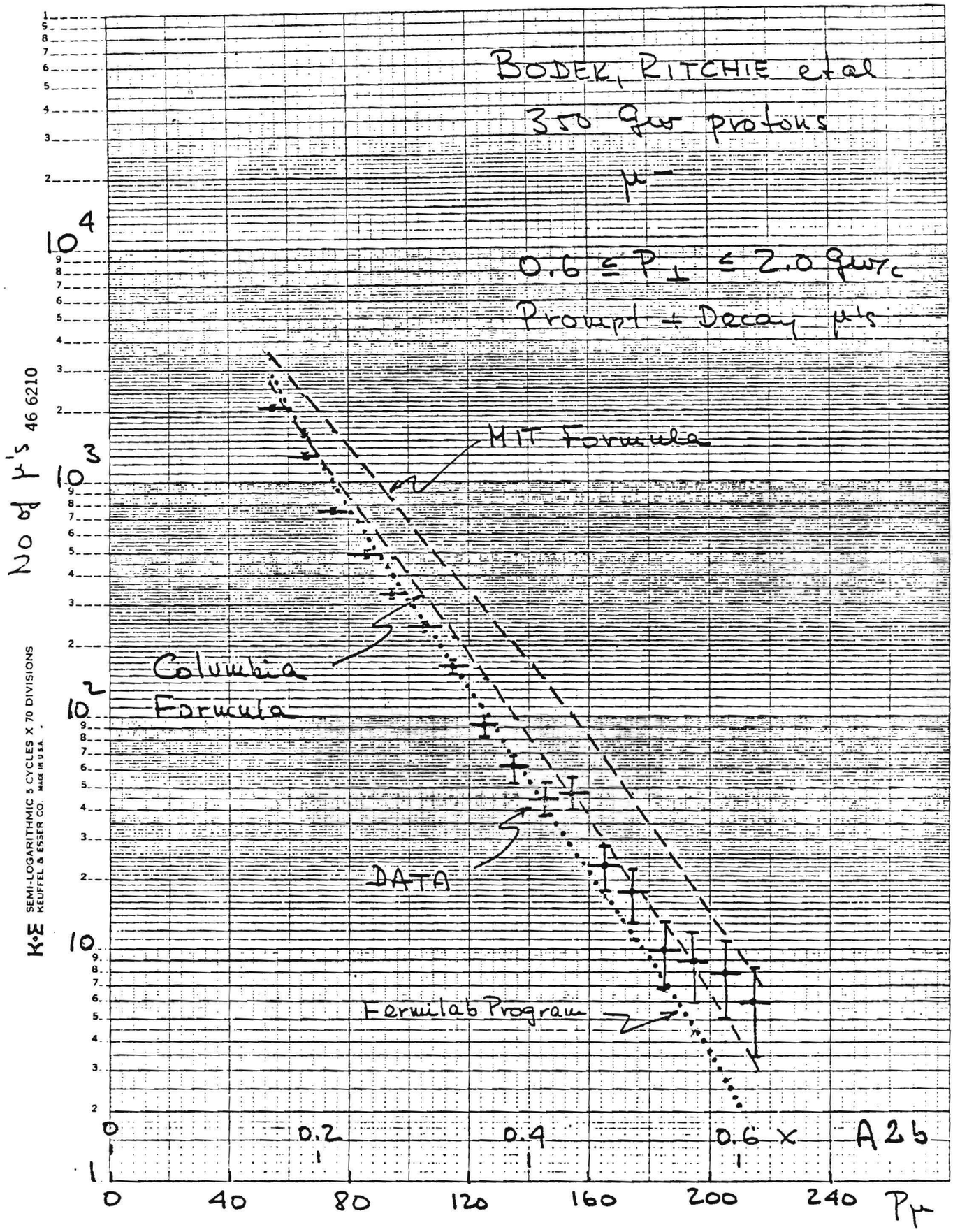
BODEK, RITCHIE et al
350 GeV protons
μ−
0.6 ≤ P⊥ ≤ 2.0 GeV/c
Prompt + Decay μ's
MIT Formula
Columbia Formula
DATA
Fermilab Program
No of μ's
Pμ
x
A2b
0
40
80
120
160
200
240
0.2
0.4
0.6
10^4
10^3
10^2
10
1
K+E SEMI-LOGARITHMIC 5 CYCLES X 70 DIVISIONS
KEUFFEL & ESSER CO. MADE IN U.S.A.
46 6210

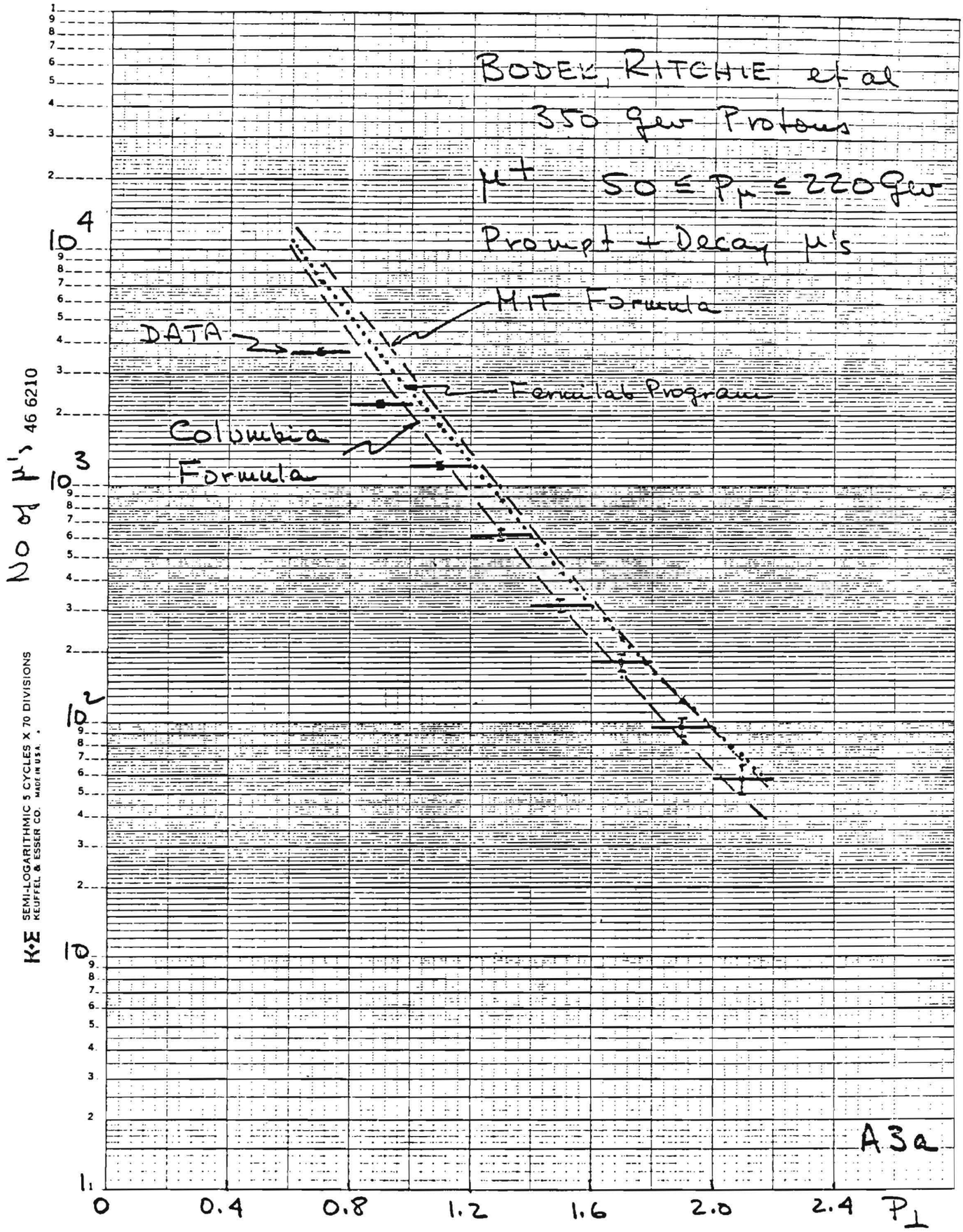
BODEK, RITCHIE et al
350 Gev Protons
μ+ 50 ≤ Pμ ≤ 220 Gev
Prompt + Decay μ's
MIT Formula
DATA
Fermilab Program
Columbia
Formula
No of μ's
P⊥
A3a
0
0.4
0.8
1.2
1.6
2.0
2.4
10^4
10^3
10^2
10
1
K+E SEMI-LOGARITHMIC 5 CYCLES X 70 DIVISIONS
KEUFFEL & ESSER CO. MADE IN U.S.A.
46 6210

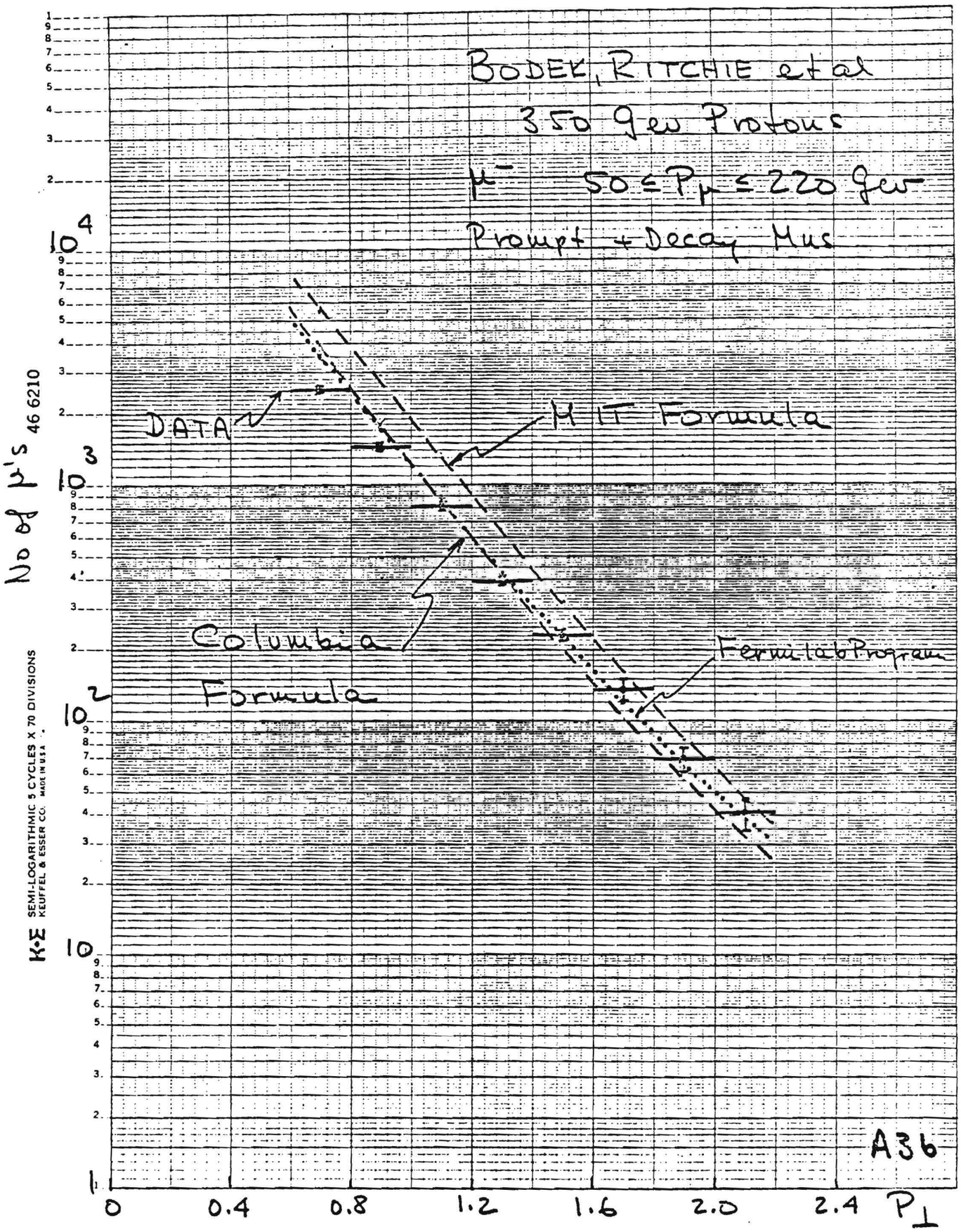
BODEK, RITCHIE et al
350 Gev Protons
μ⁻ 50 ≤ Pμ ≤ 220 Gev
Prompt + Decay Mus
DATA
MIT Formula
Columbia Formula
Fermilab Program
No of μ's
P⊥
A36
K+E SEMI-LOGARITHMIC 5 CYCLES X 70 DIVISIONS
KEUFFEL & ESSER CO. MADE IN U.S.A.
46 6210

R806, all agree to the inclusive π^0 yield departing from above from the distribution (9.2) which matches very well the medium p_t domain. Figure 9.8 gives the CCOR data extending up to 14 GeV/c. The discrepancy with the p_t^{-8} behaviour has by then reached almost an order of magnitude. As discussed later, part of the neutral yield, which is actually the one observed, could by then correspond to the prompt photon component. Nevertheless, as indicated by the results of R806, the actual π^0 yield should still dominate. While it is too early to conclude, one certainly meets qualitative agreement with expectations based on QCD.

The ISR may still have too low an energy to provide a clear test. Nevertheless, granting that the observed effect (fig. 9.8) corresponds to the emergence of the p_t^{-4} component, predictions can be made for what should be observed at much higher energies, as soon as available with the SPS used as a collider, with acceleration of protons and antiprotons. Figure 9.9 gives the expected yields for jets (anything associated with the fragmentation of constituent C in fig. 8.6) as calculated by Feynman and Field according to a QCD approach matching the medium p_t data, and eventually giving a p_t^{-4}

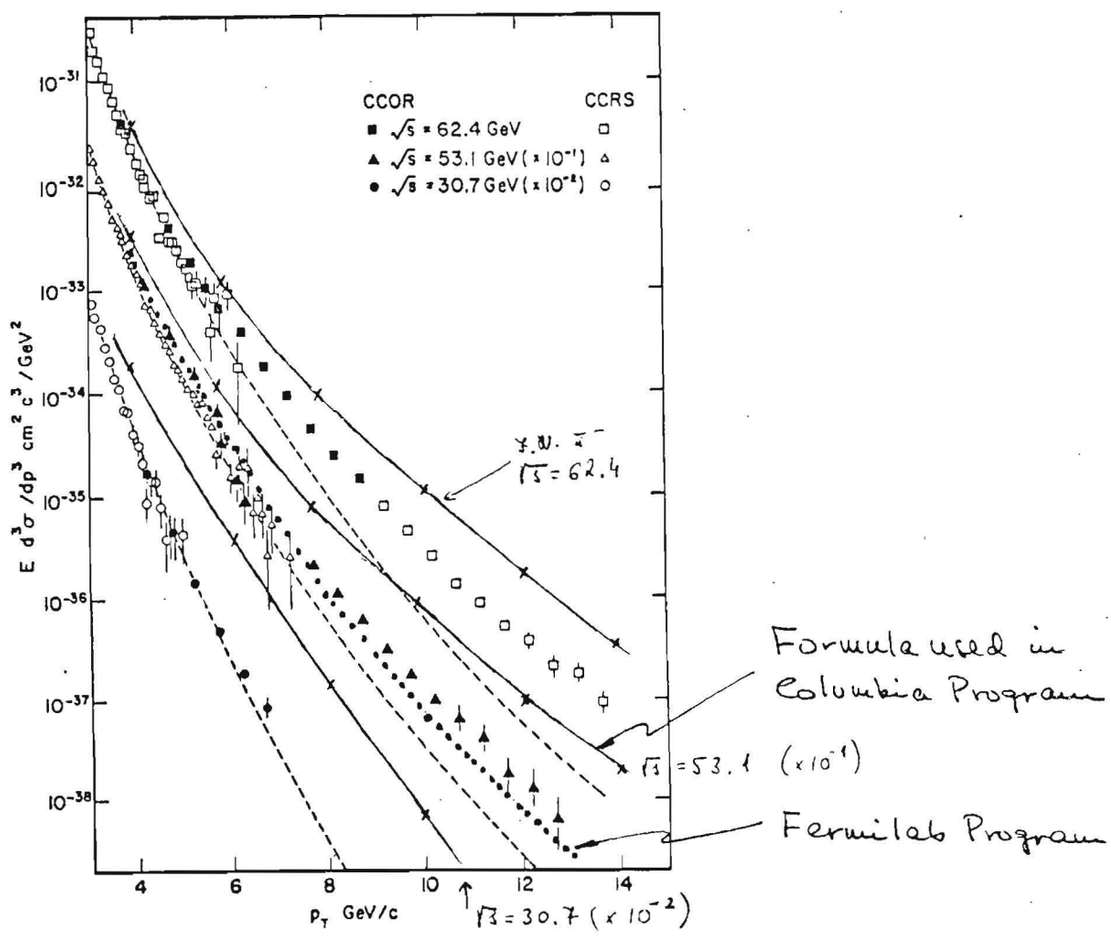

Fig. 9.8. Inclusive π^0 yields at very large p_t (R108). The dashed curve corresponds to a successful fit to the medium p_t data with $n = 8$. The observed yields are far in excess of what was predicted by the simple extrapolation. It may correspond to the emergence of a new regime with $n = 4$.

A4

R806, all agree to the inclusive π^0 yield departing from above from the distribution (9.2) which matches very well the medium p_t domain. Figure 9.8 gives the CCOR data extending up to 14 GeV/c. The discrepancy with the p_t^{-8} behaviour has by then reached almost an order of magnitude. As discussed later, part of the neutral yield, which is actually the one observed, could by then correspond to the prompt photon component. Nevertheless, as indicated by the results of R806, the actual π^0 yield should still dominate. While it is too early to conclude, one certainly meets qualitative agreement with expectations based on QCD.

The ISR may still have too low an energy to provide a clear test. Nevertheless, granting that the observed effect (fig. 9.8) corresponds to the emergence of the p_t^{-4} component, predictions can be made for what should be observed at much higher energies, as soon as available with the SPS used as a collider, with acceleration of protons and antiprotons. Figure 9.9 gives the expected yields for jets (anything associated with the fragmentation of constituent C in fig. 8.6) as calculated by Feynman and Field according to a QCD approach matching the medium p_t data, and eventually giving a p_t^{-4}

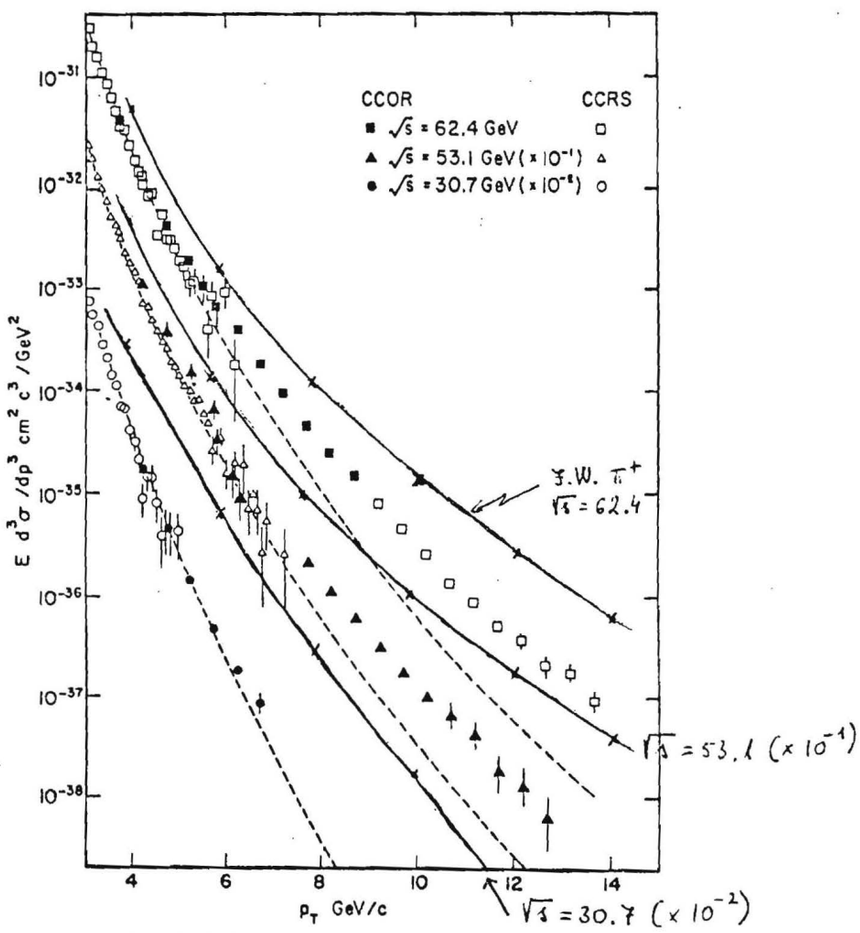

Fig. 9.8. Inclusive π^0 yields at very large p_t (R108). The dashed curve corresponds to a successful fit to the medium p_t data with $n = 8$. The observed yields are far in excess of what was predicted by the simple extrapolation. It may correspond to the emergence of a new regime with $n = 4$.

A5

P + nucleon → μ^+ + ...

Comparison with Data by CRONIN et al

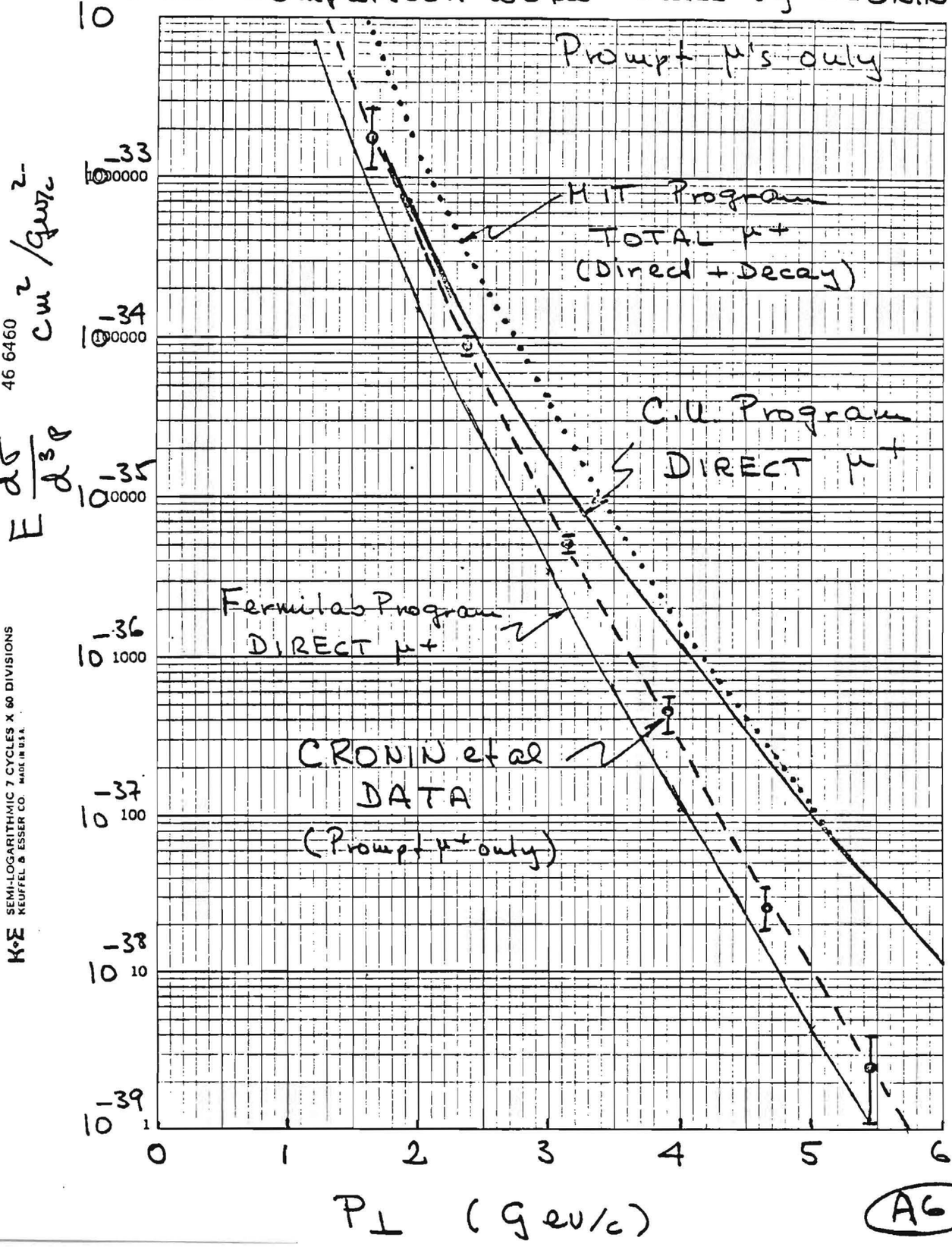

A6

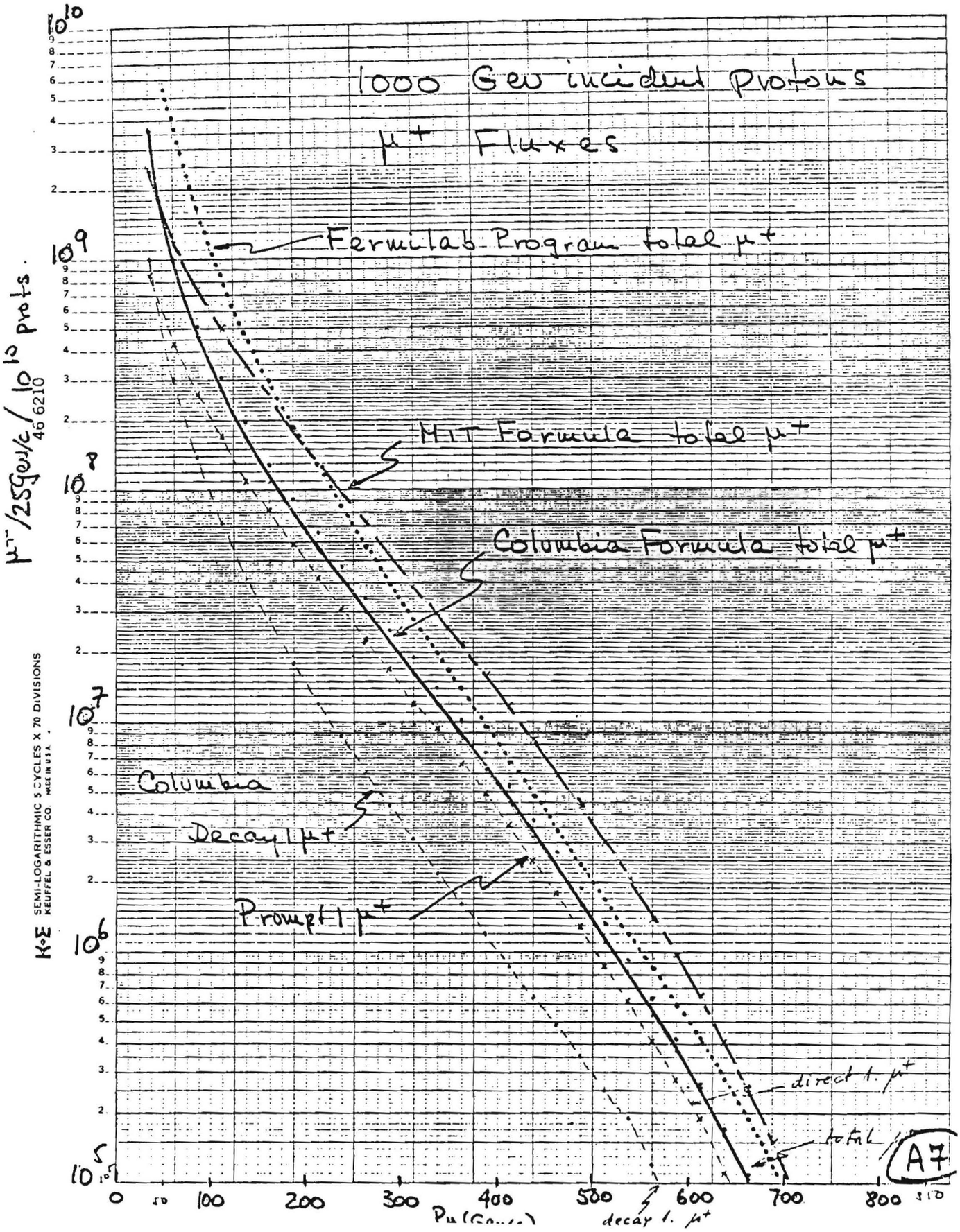
1000 Gev incident Protons
μ+ Fluxes
Fermilab Program total μ+
MIT Formula total μ+
Columbia Formula total μ+
Columbia
Decay 1 μ+
Prompt 1 μ+
direct 1. μ+
total
decay 1. μ+
μ−/25Gev/c/10^13 prots.
Pu (Gev/c)
K+E SEMI-LOGARITHMIC 5 CYCLES X 70 DIVISIONS
KEUFFEL & ESSER CO. MADE IN U.S.A.
46 6210
A7

V) MUON SHIELD DESIGN FOR THE PROMPT NEUTRINO FACILITY

It is desirable to have maximum prompt neutrino flux in the detectors. This requires the distance from the target to detectors to be minimized. However, unless special precautions are taken the muon flux from the target will prevent the successful operation of the detectors. As a design guideline we have required the muon flux in the 32" and 15' Bubble Chamber to be less than 5 per 10^{13} interacting protons. This criterion has been satisfied with the use of large magnets to deflect the muons and locating the detectors at about 58 meters and 160 meters from the target.

A) General Layout of Area

Figure V.1 shows a layout of the area stretching from the Target Hall to Lab C which contains the final neutrino detector in the line. The principle items downstream of the target point are listed below:

(i) Solid iron magnet 4m long operated at 21 Kg which can be installed and removed through the target box.

(ii) A second conventional 5m long, 20 Kg magnet. This magnet cannot be moved once it is installed and surrounded by shielding.

(iii) Large magnet or magnets whose purpose is to deflect muons away from the detectors.

(iv) The new 32" Bubble chamber and its associated active and passive shield.

(v) A new experiment hall for an electronic detector.

(vi) Lab E which exists and contains an electronic neutrino detector.

(vii) Passive shielding for low energy background radiation.

(viii) The 15' Bubble Chamber.

(ix) Lab C which exists and contains an electronic detector.

Here we shall briefly review the general characteristics of the first three items. The target box magnet, in addition to bending muons limits residual activity to less than about 1 R at its downstream face where electrical and water connections are made. This imposes the length of the magnet to be not less than 4.0 m. We have chosen this length because a larger magnet would rapidly become impossible to handle through Prompt Hall. The second magnet in addition to contributing to the sweeping action on muons, attenuates the neutron flux from the dump target. At the downstream face of the magnet there is a tolerably low neutron flux such that the Bubble Chambers can operate successfully at 58m and 160m respectively.

The design of the large magnet or magnets for deflection of muons out of the detectors has demanded an exhaustive and extensive study. The number of $\gtrsim$ 800 Gev muons produced in the target is adequately low that they may be permitted to strike the

detectors. To sweep out <800 GeV/c momenta imposes a lower limit to the integral magnetic field bending power. This corresponds to about 600 Kg meters. The transverse dimensions of the magnetic field must be such that all muons of $\gtrsim$ than about 40 GeV/c and $p_\perp \lesssim$ 10 GeV/c must also be swept out of line of the detectors otherwise the fluxes are unacceptably high. These criteria must be met by any magnetic system design.

B) Alternative Designs of the Magnetic Shield System

Three distinct designs have been studied. These are:

(i) Solid iron conventional magnets

(ii) Air gap conventional magnets

(iii) Superconducting magnet with iron for the return magnetic flux.

The general mechanical and electrical descriptions of these systems will now be given along with general design considerations.

1) Solid Iron Conventional Magnet System

This was the first design studied and a progress report was written in June 1981 and made available to the P.A.C. and subsequently this design received laboratory review in November 1981. Figure IV.2 shows a layout of the set of magnets. The five magnets have horizontal magnetic fields providing vertical bending

for the muons. Figure IV.3 shows 100 GeV/c muon trajectories for initial vertical transverse momenta in the range -6 to +6 BeV/c. Muons that reached the Bubble Chambers were found to be principally from deep inelastic scattering in the iron and more particularly from trident interactions in the iron. In the latter process a muon produced in the target at a typical momentum of 200 GeV/c would be deflected by the first two magnets and produce a muon pair in the coulomb field of an iron mucleus. The opposite charge member of that pair then would be deflected by the subsequent magnets back towards the detectors. To eliminate these muons it was found necessary to add an additional magnet with a vertical field downstream of the previous set of magnets as shown in Figure V.2. This magnet does not affect the vertical deflection given to the muons by the first set of magnets, but bends the typically less than 100 GeV/c troublesome trident muons horizontally away from the detectors. Calculted muon fluxes satisfied the initial design criteria.

Parameters:

Total iron weight =	11,000 tons
Total power consumption =	0.6MW (D.C.)
	0.2 MW (Pulsed)

Capital Cost

Cost of Coils	$ 150K
Cost of iron at $500/ton	$5,500K
Manpower	$ 250K
Power Supply	$ 100K
Rigging and Surveying	$ 500K
Civil Construction	$ 300k
	$6,800K

Operating Cost (Pulsed)

0.2 MW x 25% duty cycle x $30,000/month
x 12 months = $20K/year

Total 5 Year Cost = $6,900K

This design was considered to have substantial uncertainties in the calculated muon fluxes. The background muons into the detectors came from interactions of the primary muons in the form of deep inelastic scattering, trident production and somewhat less from charm production and subsequent decay into opposite sign muons etc. Hence, the reliability of the calculations would be greatly increased if minimal material was placed in the path of

the high flux of primary muons. This consideration led to the second design.

2) Air Gap Conventional Magnet

This design was initiated in October 1981 and a preliminary report was made in November 1981 at the laboratory review mentioned previously. Figure V.4 shows a layout of the six magnets required in this design. A preliminary engineering design of this system has been made by R. Fast of Research Services and is attached as Appendix V.1. The main results are as follows. The magnetic field profiles of the magnets hve been calculated and included in the programs which calculate the muon fluxes. The central fields are designed to be 2T. The D.C. power requirement is 4.1 MW. However, it has been shown that the magnets can be pulsed to match the repetition rate of the Tevatron and therebye reduce power consumption to about 1.1 MW. It will be possible to use the old 30-inch Bubble Chamber power supply for this purpose.

A summary of the cost of this system is as follows:

Capital Cost

Cost of coils	$ 1,140K
Cost of iron at $500/ton	$3,308K
Manpower	$ 250K
Power Supply	$ 100K

Rigging and Surveying	$ 404K
Civil Construction	$ 400K
	$5,612K

Operating Cost

30 months continuous operation	$1530K

The major advantage of this design is the fact that the intense muon flux is contained primarily within the gap region of the magnets. Hence, muon interactions are minimized and the reliability of the design is enhanced. Because opposite sign muon production by muons is reduced the final magnet with vertical field may be eliminated thereby reducing the weight of the overall system from 11,000 tns to 7,200 tons.

When the proton beam is targeted at non-zero angle relative to the detector axis, it is necessary to move the air gap magnets sideways to align the gap region with the region of high muon flux. Under these conditions, the muon rate into any detector for production angles in the range 0 - 40mr, is acceptably low as defined earlier.

The air gap conventional magnet design therefore has greater reliability than the original design, and in addition, will cost less. For ths reason we will not discuss further the solid iron magnet design.

3) Superconducting Magnet

In December of 1981 we started to investigate the properties of a large superconducting magnet which would have the desired field properties described earlier. By increasing the magnetic field to 5.0 Tesla it made the effective bend point of the magnet closer to the target and hence a somewhat smaller integral magnetic field could be realized.

The superconducting magnet preliminary design has been made by E. Leung of Research Services. The details are described in

Appendix IV.2. A summary is provided here.

The 8.4 m long magnet has a horizontal dipole field and is composed of four coils wound in the form of a racetrack. The clear aperture of the magnet is 30 cm horizontally and 1.4m above and below the beam axis. The stored energy of the system is about 600 MJ. The coils are shown in Figure V.5. The use of iron around the magnet is to shield the surroundings, reduce the ampere-turns, and help range out low energy muons. The horizontal field profile as a function of height above the beam axis is shown in Figure V6. The layout of the area with the superconducting magnet is shown in Figure V 7(a) and (b).

A summary of the cost of this system is as follows:-

Capital Cost

Coils	$1,438K
Iron at $500 per ton	1,907K
Refrigeration, power supply, instrumentation	735K
Manpower	884K
Civil Construction	357K
Rigging and Surveying	229K
Total	$5,550K

Operating Cost

For 30 months continuous use	$225K

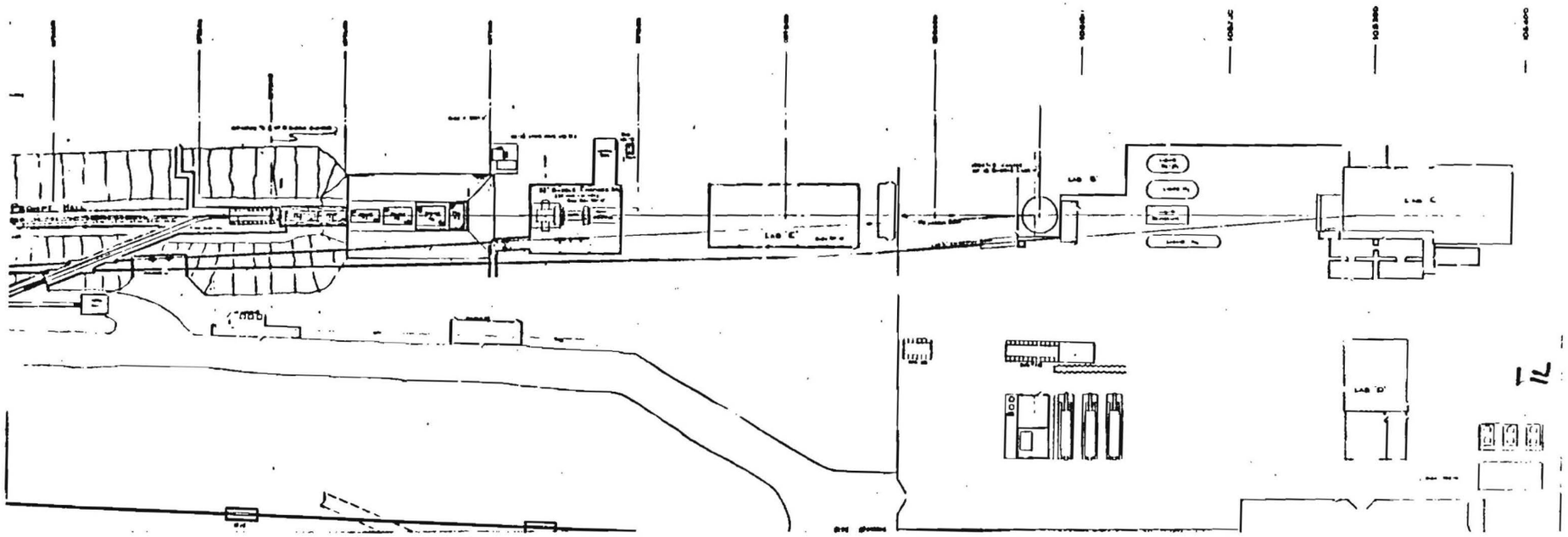

FIGURE V.1

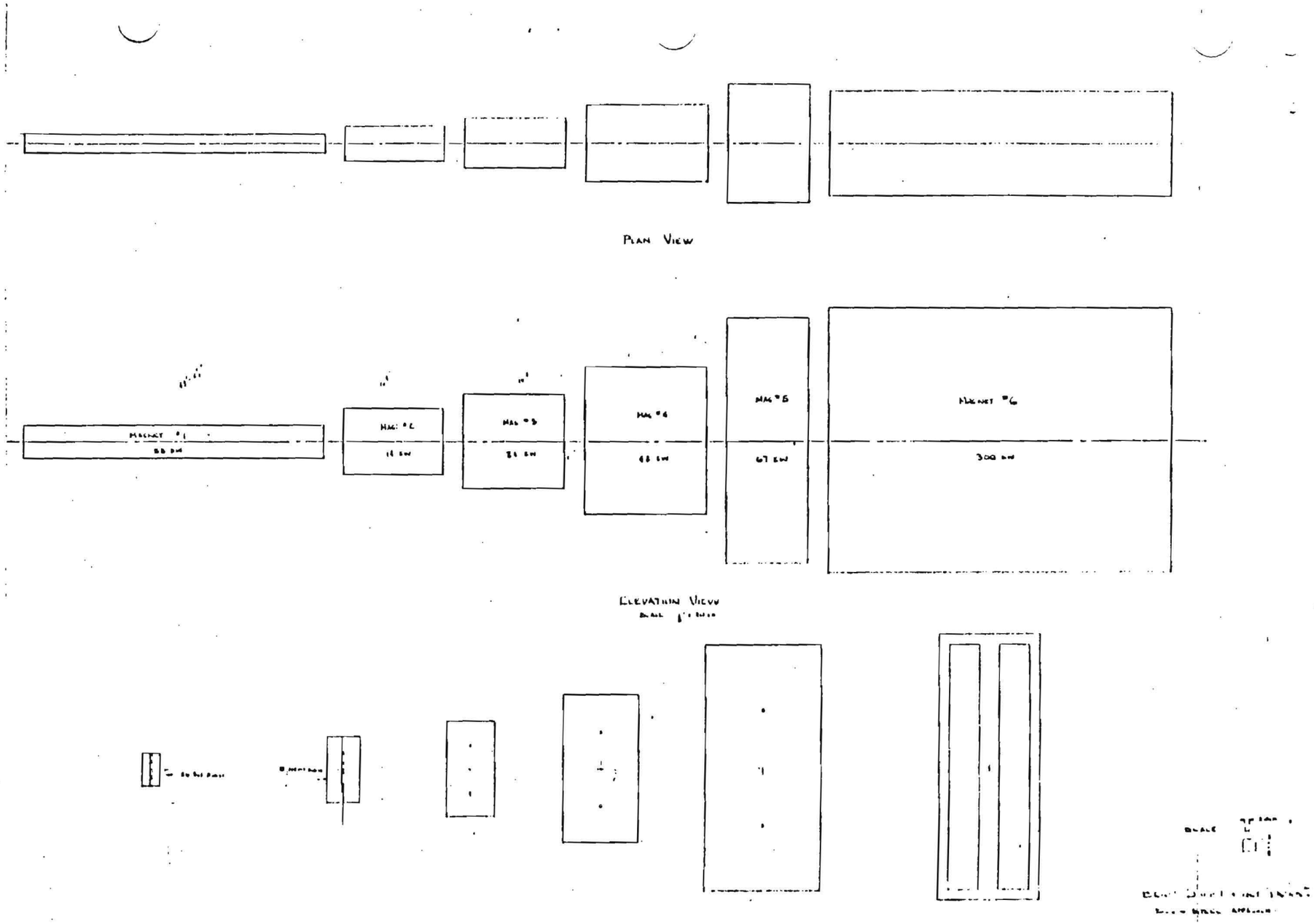
PLAN VIEW
MAGNET #6
300 KW
ELEVATION VIEW

Design .2 Dump of face of H1.

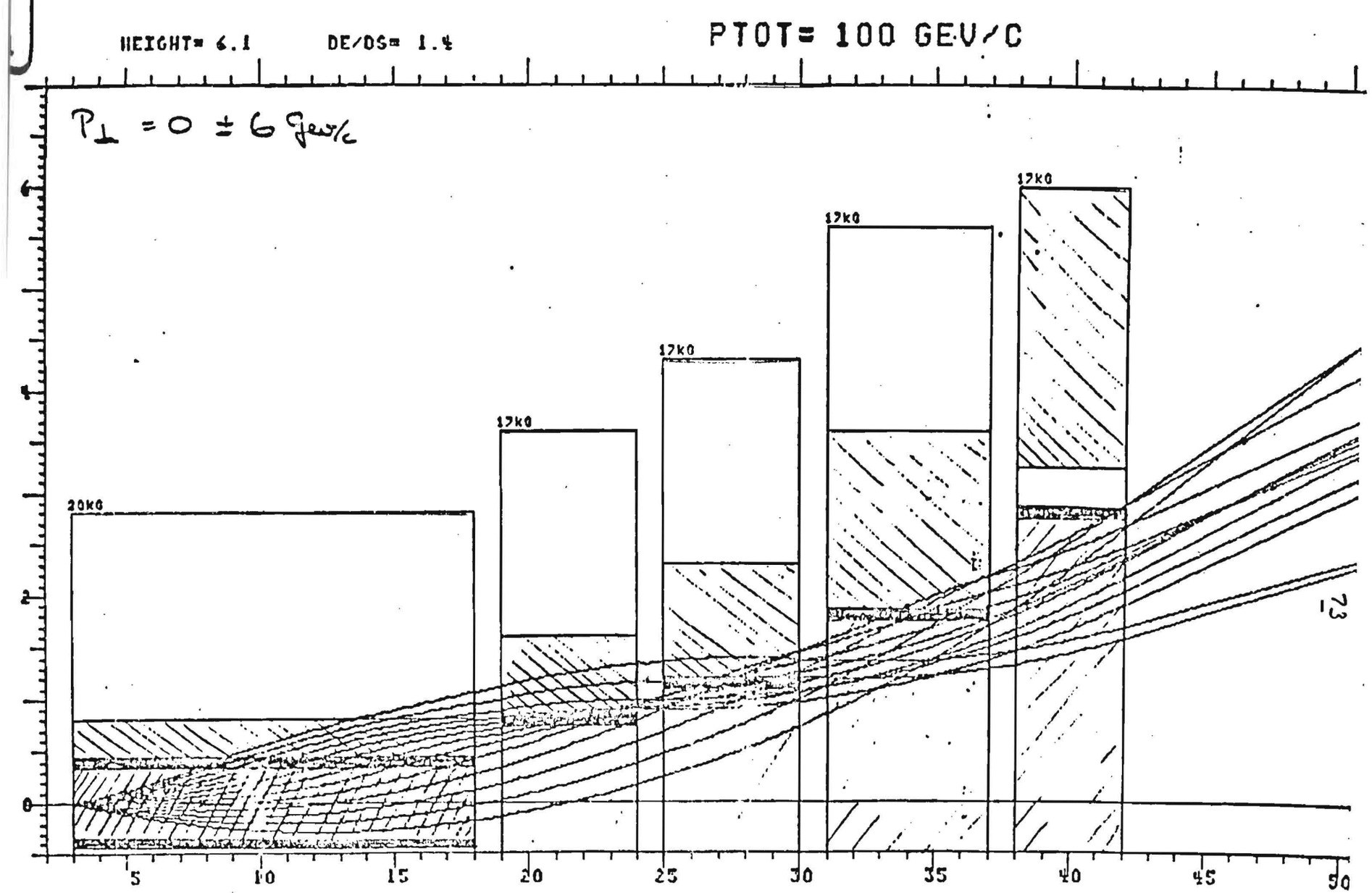

FIGURE V.3

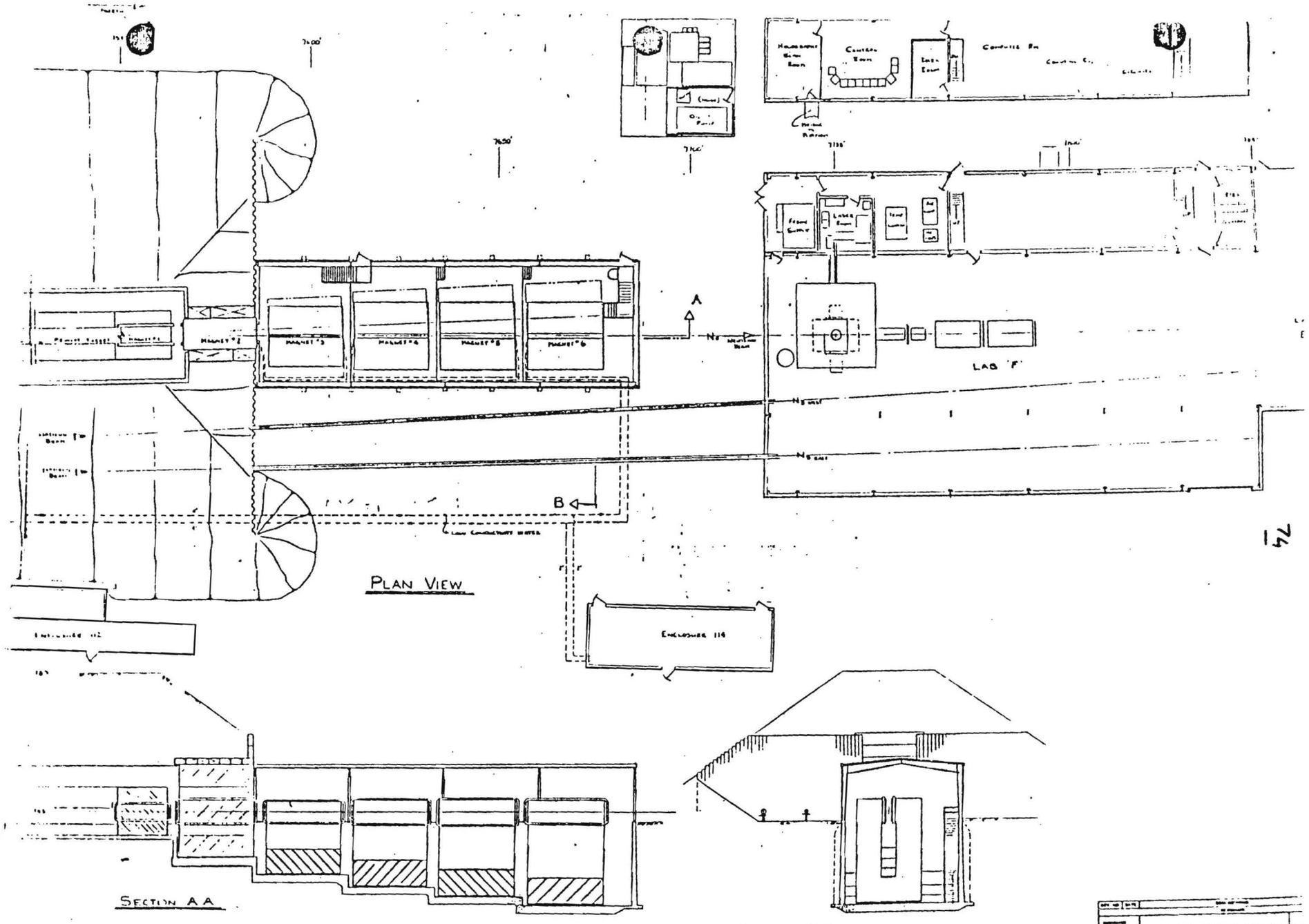
PLAN VIEW
SECTION A A
SECTION B-B
LAB 'F'
ENCLOSURE 116
A
B
FERMI NATIONAL ACCELERATOR LABORATO

FIGURE V. 4

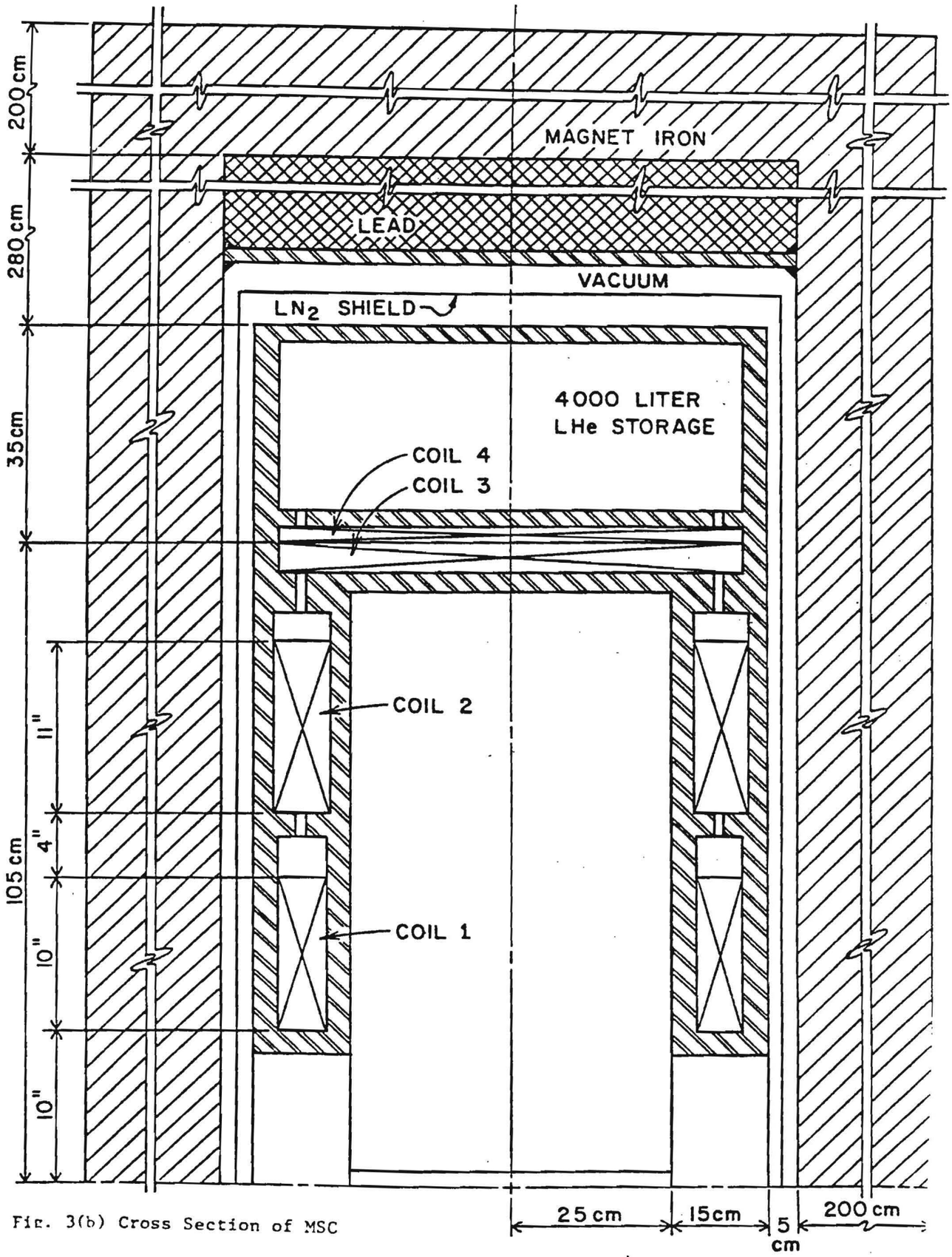

Fig. 3(b) Cross Section of MSC

FIGURE V.5

Fig.V6(a)The Vertical Distribution of Horizontal Field on the Mid-Plane

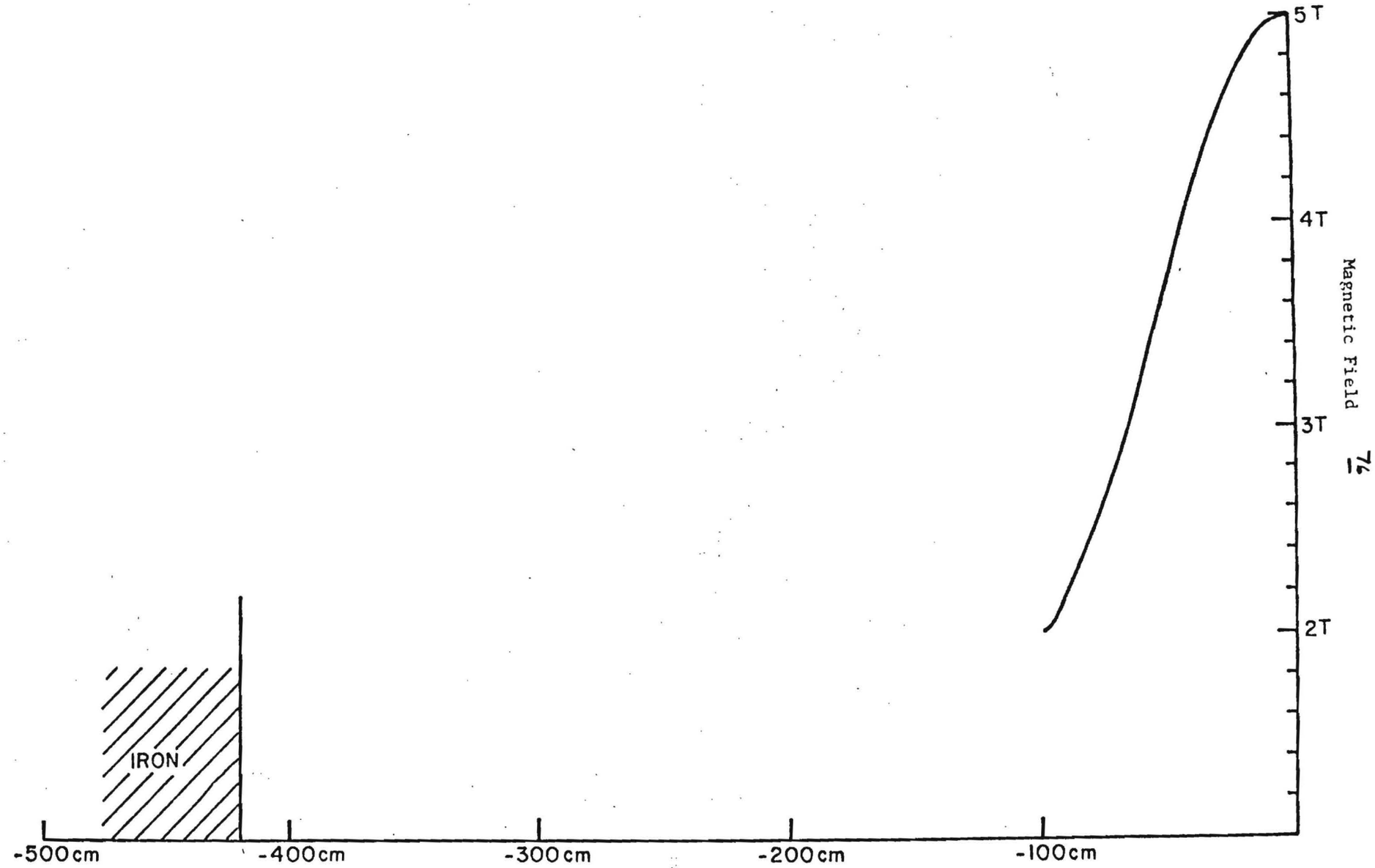

(a) The Positive Field Profile

Distance From Center of Magnet

(b) The Return Field Above the Coils

Distance From Center of Magnet

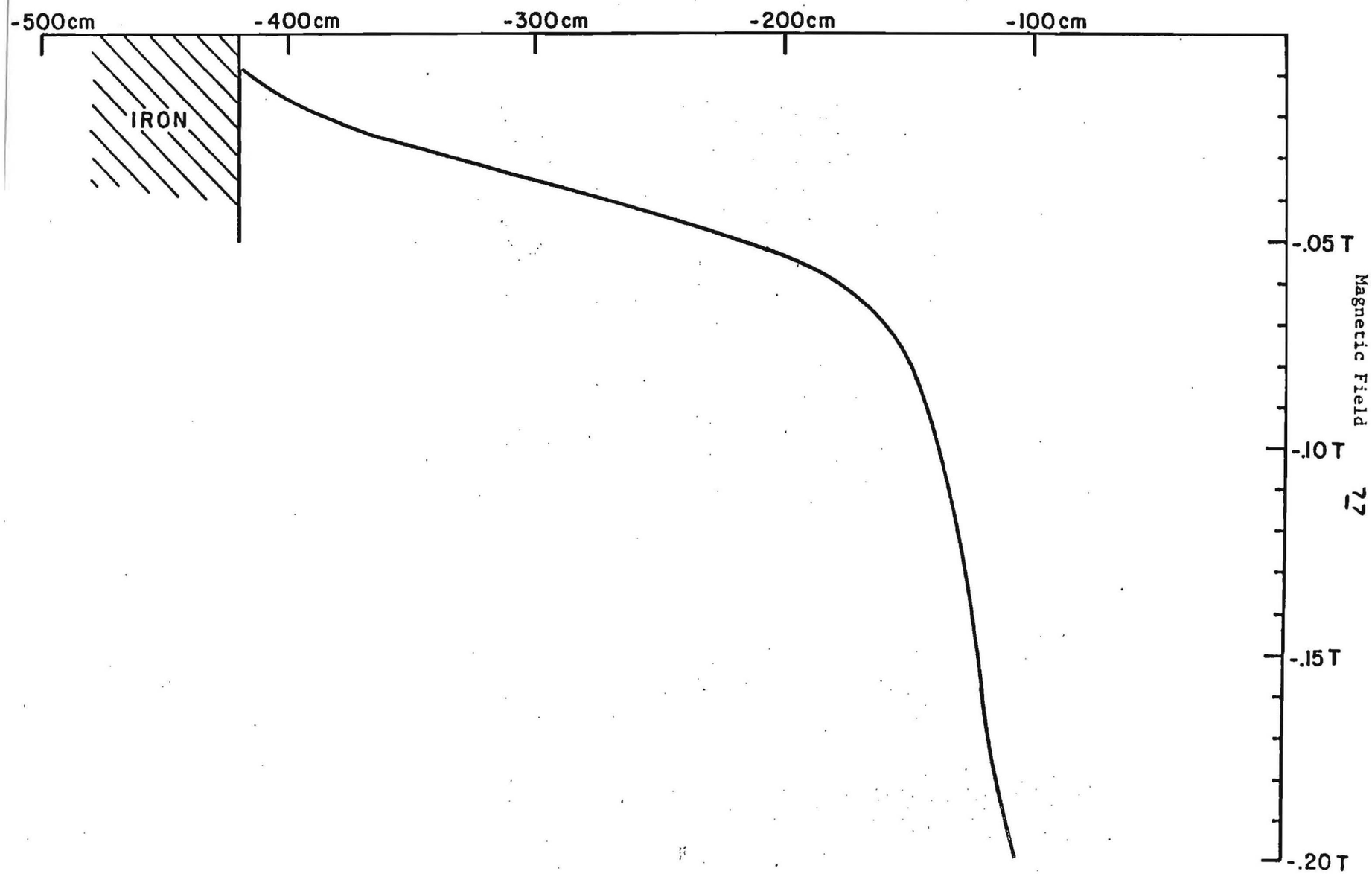

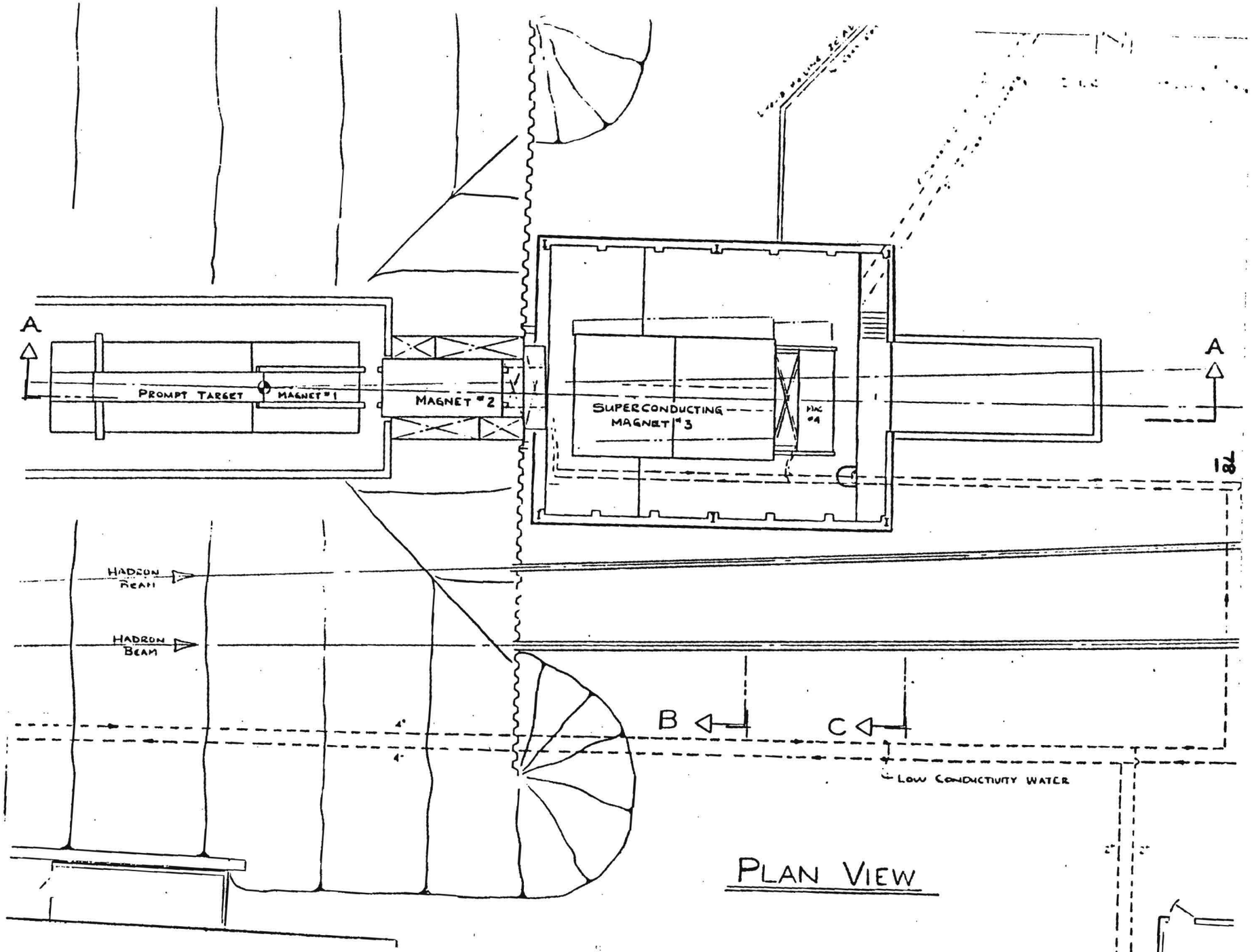
A
PROMPT TARGET
MAGNET #1
MAGNET #2
SUPERCONDUCTING MAGNET #3
MK #4
A
HADRON BEAM
HADRON BEAM
B
C
LOW CONDUCTIVITY WATER
PLAN VIEW

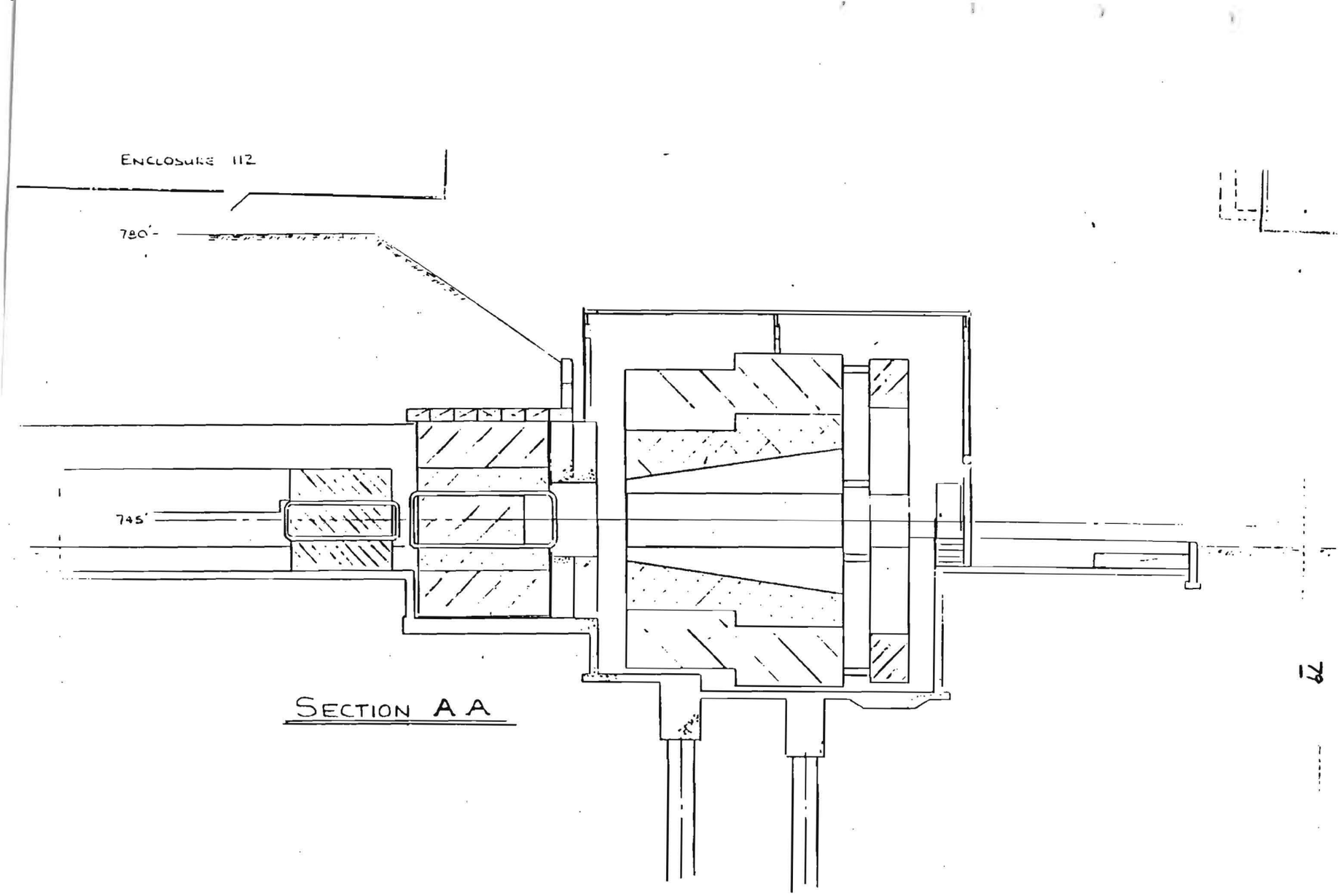

Fig.V7(b) Superconducting System (side view)

4. Muon Fluxes from the Dump

Muon fluxes in the new 32" B.C. and 15' B.C. have been calculated independently by the three programs described earlier. Results are presented for both the conventional magnet and superconducting magnet designs. These fluxes are for the case of a full density tungsten target and include prompt and non-prompt muon production sources. Final results are shown in the attached table. The calculations refer to:

I. Columbia

II. Hawaii-Fermilab

III. MIT

The results of the different calculations are in good agreement with each other as they were in the case of the E-613 shield calculation. It can be seen that in both the conventional and superconducting magnet designs no more than a few muons per 10^{13} protons at 1 TeV are expected in either of the bubble chambers.

I. CONVENTIONAL MAGNET DESIGN

		32" B. C. CALCULATION I	32" B. C. CALCULATION II	32" B. C. CALCULATION III	15' B. C. CALCULATION I	15' B. C. CALCULATION II	15' B. C. CALCULATION III
Coulomb Scattering	μ^+	0.3	0.2	0.5	<0.1	<0.1	<0.1
	μ^-	0.3	0.5	0.5	<0.1	<0.1	<0.1
Deep Inelastic Scattering	μ^+	0.2	<0.1	<0.1	<0.1	<0.1	<0.1
	μ^-	<0.1	<0.1	0.5	0.1	0.1	1.0
Trident Production	μ^+	0.5	0.1	1.5	<0.1	0.7	0.2
	μ^-	0.2	0.1	0.5	0.5	0.2	0.5

II. SUPERCONDUCTING MAGNET DESIGN

		32" B. C. CALCULATION I	32" B. C. CALCULATION II	32" B. C. CALCULATION III	15' B. C. CALCULATION I	15' B. C. CALCULATION II	15' B. C. CALCULATION III
Coulomb Scattering	μ^+	0.4	0.6	0.5	<0.1	0.2	<0.1
	μ^-	0.2	0.8	0.5	0.1	0.9	<0.1
Deep Inelastic Scattering	μ^+	<0.1	<0.1	0.5	<0.1	<0.1	0.2
	μ^-	0.25	0.6	1.5	0.5	0.1	0.5
Trident Production	μ^+	0.7	<0.1	0.7	<0.1	0.1	0.5
	μ^-	0.1	0.2	0.3	0.1	0.2	1.0

Some general comments on muons from the various sources is of interest.

i. Columb Contribution

a. Muons in the band pass energy.

This source may be the most serious if the design is not done properly because of the potentially very high intensity. In the present designs, the band pass energy is around 20 GeV which is sufficiently low so that the muons can be absorbed in the passive shield inside the magnets. There is no resulting muon contribution from this source.

b. Muons with Threshold Energy

Other than the muons in the band pass, there are muons which barely escape out of the dump with energy around and less than 1 GeV. These low energy muons may scatter with a very large angle and hit the chambers. Although the muons can be absorbed in the passive shield in front of the chambers, it is safer not to have them in the first place. To eliminate the problem, a small magnet (called spoiler) with low field is placed so that it kicks away the low energy muons that just emerge from the absorber in the magnet. There is also no resulting muon background contribution from this source.

c. Muons get caught in the fringe field.

As shown in the Appendix, the field of the C-magnets extends beyond the coil unlike a solid iron magnet, in which there is a sharp cut off of magnetic field. Because the field around the coil is neither strong nor weak, there are muons with energy of around 40 GeV and vertical $p_\perp$ of around ±5 GeV which get caught and bent back toward the detectors. The muon background to the 32" B.C. by this process is small ($\leq$ 0.5) for the design with the superconducting magnet and $\sim$ <2 for the design with C-magnets. There is no contribution to the 15' B.C. by this process.

ii. Muons Scattered Deep Inelastically.

Since both systems are designed so that high energy muons with high intensity do not pass through much material in the dump, neither designs have serious problems from this source. However, there is some contribution from the dirt. This problem is limited to the design with superconducting magnet because:

a. the length of the magnet is short, i.e., there is more dirt between the dump and detectors,

b. the bending power of the design with the superconducting magnet is about 15% less than the design with c-magnets.

For these two reasons, the superconducting magnet design gives about one muon to both chambers from this source.

Also, the muons can scatter off the superconducting coil and this contributes about 0.5 muons in the 32" bubble chamber.

iii. Trident Production.

Any trident produced inside a magnet field is potentially dangerous. As mentioned earlier, this is the reason for air-gap magnets. The major source of tridents for both designs is the pole face of the magnets which are hit by high $P_\perp$ muons. There is one muon background with the superconducting magnet design and two muons in the other design in the 32" chamber.

A source of tridents for the 15' B.C. is the magnet of the 32" chamber. One sign of muon produced in the magnet bends toward the 15' B.C. and this gives about 5 muons as background. Modification of the 32" B.C. magnet has been initiated. A slot in the magnet is made so that high intensity muons do not interact. With the slot the background gets better by a factor of 6 so that there is less than one muon in the 15' B.C. Another reason for the slot is to reduce the background in the downstream detectors of the 32" bubble chamber. It is found that without the slot there are about 20 muons in CRISIS from tridents produced in the magnet. With this slot the number drops by about a factor of 5.

VI. Muon Fluxes Associated with the Proton Beam Transport

1. Beam Gas Interactions

We have examined the effects of proton beam interactions with the residual air of the vacuum system in the transport system. Pions and kaons produced in the air can decay to muons which traverse magnets and earth berm and reach the bubble chambers. The program HALO has been used to study this problem.

Proton-residual gas interactions were simulated by considering segments of 300' long to be lumped at the centre of that particular segment. All dipoles and quadrupoles together with tunnel dimensions and external earth shielding were simulated in the calculation. The spatial and correlated angle and momentum distribution of muons arriving at a plane transverse to the beam at the location of the tungsten target is shown in Figure VI.1. This result is for interactions at the front of the Wonder Building. Similar distributions for other source locations are shown. These distributions of muons were then entered as input to the standard Monte Carlo program used for calculating muon fluxes from the tungsten dump. The output of that program gave muon fluxes in the detectors.

The results of the calculation are shown in the attached Table for the case of the superconducting magnet design. For pressures of $\leq 0.3\mu$ upstream of E-103 and $\leq$ 0.1 μ throughout E-103 and down to the target the resulting muon fluxes are tolerable.

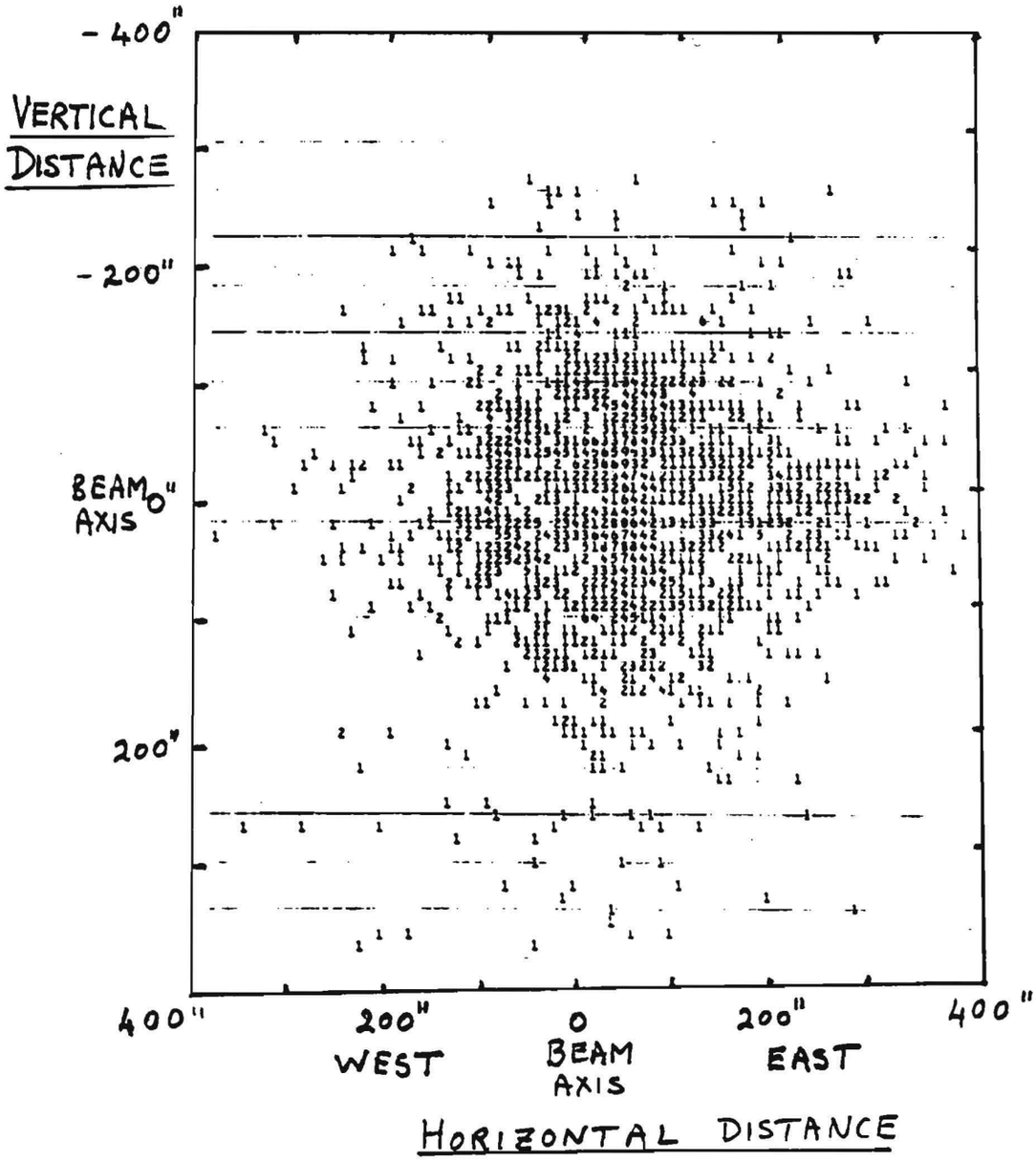

Negative muon spatial distribution in a plane transverse to the beam direction at the location of the tungsten target in Prompt Hall. The muons are produced by the interaction of $5 10^6$ protons at the front of the Wonder Building.

FIGURE VI. 1

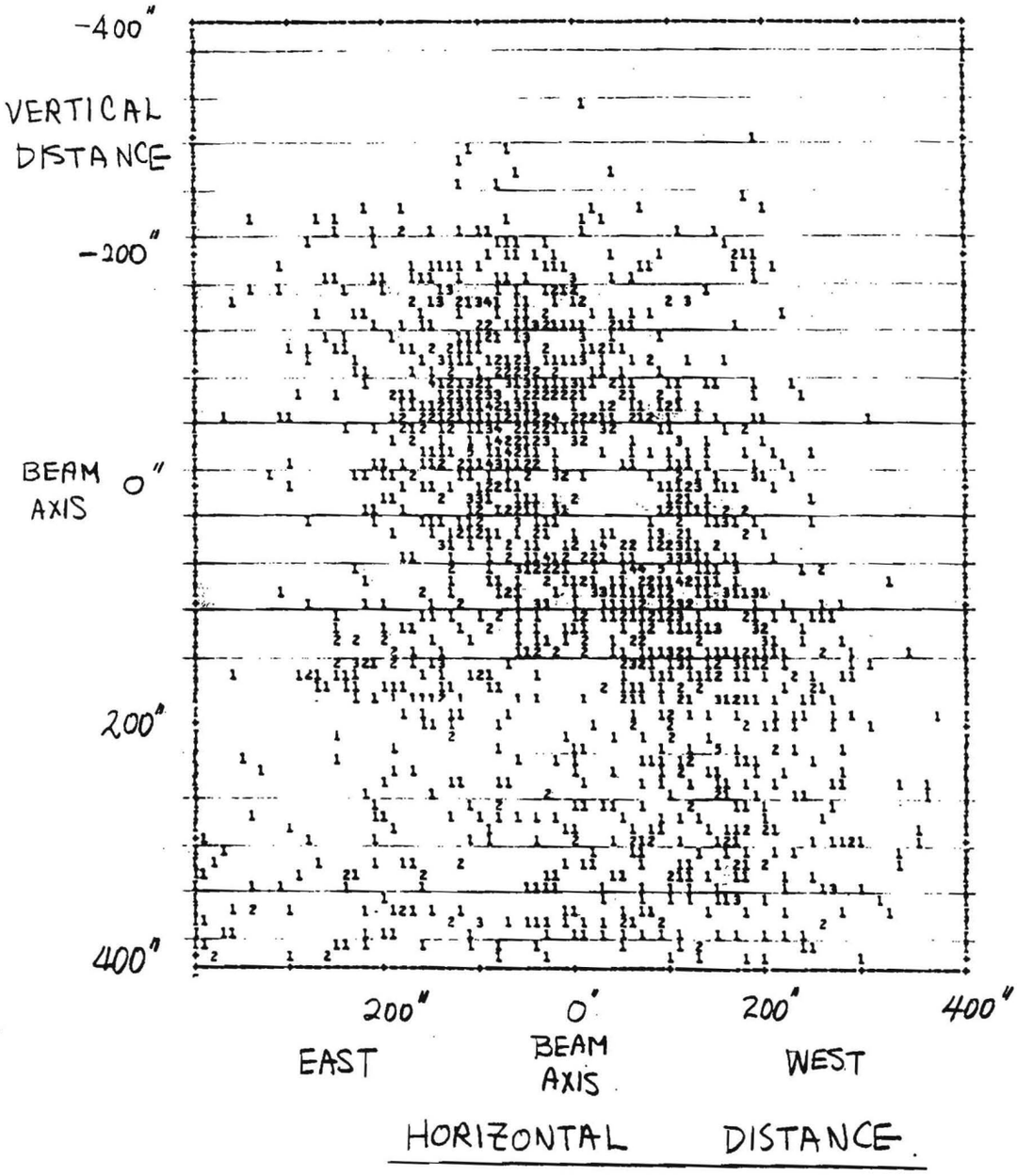

Positive muon spatial distribution in a plane transverse to the beam direction at the location of the tungsten target in Prompt Hall.

The muons are procured by the interaction of 2.5 x 10^7 p at the front of Enc. 103.

FIGURE VI.2

2. Beam Collimation

It can be seen from the previous discussion that fractional beam losses of $\leq 10^{-7}$ in E-103 are acceptable and somewhat less than this downstream of E-103. Beam losses $<10^{-6}$ have been achieved in the proton transports for E-613 in the Meson Lab and prompt neutrino experiments at CERN. Due to the fact that the bubble chambers at CERN were protected by a full 400 GeV muon range shield they experienced no difficulties. In the present case the situation is more difficult and great care must be exercised in minimizing beam losses. Our work in this area has begun and we can only give a progress report.

To ensure low beam losses we must collimate the beam and eliminate halo at some point upstream of E-103. We have examined two possibilities; E-100 and the downstream end of E-99. The results look rather encouraging although the statistics must be improved. It appears that we can interact halos of $\geq 10^{9}$ protons per pulse at both E-100 and the downstream end of E-99 with acceptably low muon fluxes in the detectors. We would like to push our knowledge of these limits further by more extended computer runs. In addition, we have to explore the possibility of collimation at the upstream end of Front Hall where the situation should be even more favorable.

Much more work remains to be done on the final choice of locations of collimators, decisions on magnet apertures, i.e. 6x3x120 versus B2 magnets, and the optimum approach to achieving the required vacuum in the transport system. However, it appears

there are no insurmountable problems in the design of an adequately clean proton transport for the prompt neutrino facility.

One important fact has emerged from this study with direct relevance to the choice of design of active muon shield. The conventional magnet and superconducting magnet designs are about equal in their response to the transmission of the diffuse muon distributions associated with losses in the proton beam transport system. Thus shielding from the muon halo cannot be used as a distinguishing feature in the choice of optimum design of the active muon shield.

	VACUUM	μ BACKGROUND	
		Muons/Pulse	
	Microns Pressure	32"	15'
E99-E100	0.3	0.2	0.6
E100-E103	0.3	0.2	0.6
E103-E204	0.1	0.0	0.2
E204-E206	0.1	0.0	0.5
E206-Prompt Hall	0.1	0.1	0.2
Prompt Hall-Target	0.1	0.2	0.1
	TOTAL	1.3	4.6

It should be noted that these calculations were performed assuming there were magnetized iron toroids (18kg) with length 3' and radius 1' located every 30' between enclosure 206 and Prompt Hall. Without the toroids being present the requirements on the vacuum system are about one order of magnitude more stringent than given in the Table. The final choice of whether to use toroids or not will depend upon vacuum tests which will permit a cost analysis of the two approaches.

VII. Comparison of Designs and Conclusions

The conventional and superconducting magnet designs perform equally well in reducing muon fluxes into both bubble chambers. This refers to muons coming from the dump target and also halo muons associated with losses in the proton transport system. In terms of effectiveness of the objective of the design there is no clear basis for choosing one design over the other.

The cost and construction schedule for building either of the two systems are also identical within the uncertainties of the estimates. Again, there is no impetus for choosing one design over the other.

We have studied the relative sensitivity of the two designs to effects such as a 20% loss of magnetic field, an error in our formulation of ionization loss of energy by muons in the absorber in the magnets, etc. and find that the two designs respond in a similar way.

The operational reliability of the two types of magnet is expected to be similar.

Hence, we can see no major reason for preferring one solution over the other.

There is, however, some secondary advantages of the superconducting magnet design. Its short length provides an additional sixteen meters distance between the magnet and the 32" bubble chamber. The extra distance provides the opportunity to respond to an unexpectedly high muon flux in the detectors. The response could be in the form of additional magnets or passive

shielding.

Also, muon trajectories are simpler in the superconducting design with a much smaller fraction of muons going through regions of fringe field. This may enhance the reliability of the calculated fluxes in the superconducting design. Another consequence of simpler muon trajectories is that if it becomes desirable to measure muons in coincidence with, or independently of, neutrinos from the dump then the tracking will be more straightforward. If coincidence measurements were found to be desirable, then a good duty cycle would be essential. A 20 second flat top at full field would add greatly to the power costs of the conventional magnet solution. Of course, this is not the case in the superconducting design.

For neutrino production at non-zero angles only one magnet need be moved rather than four, hence alignment problems are substantially reduced in the superconducting solution.

There is a possible advantage to the conventional magnet design. There are four air gap magnets with no obstructions in the gaps and they could therefore be useful for a variety of future purposes. The superconducting design has an "air" gap in the form of a vacuum box which contains the coils and mechanical supports traversing the gap. Hence future uses of the superconducting magnet would be substantially more limited.

Consideration of all of the above factors lead us to the conclusion that because the superconducting design offers somewhat greater calculational reliability, reaction capability to

unforeseen problems, long duty cycle use and ease in alignment it will be advantageous to choose this design.

Conventional Magnets for Prompt Neutrino Facility
Magnets M3, 4, 5, 6

R. Fast*

October 14, 1982

Scope

This report will discuss some of the conventional (water-cooled) magnets for the muon shield in the prompt beam. Preliminary field calculations have been done and a satisfactory iron/coil geometry obtained. Estimates of the coil and iron capital costs and DC and pulsed power requirements given.

Requirements

Bo = central field = 2.0 T

$\int BdL$ = 48 T-m (1575 kG-ft)

$(-B_x)_{max}$ = maximum value of reversed horizontal field component outside aperture

< 500 - 600 G

$B_x(y)$ should drop quickly outside the aperture

A C-magnet style with racetrack coils was chosen to avoid tall, narrow magnets. The iron/coil geometries for the magnets are given in Figs. 1-4. In order to reduce the power requirements, a pulsed current design was considered.

Calculations

The magnetostatic problem was solved in two dimensions, the x-y plane, using the program LINDA. The program calculates

* Research Services Department

horizontal and vertical field components as a function of position in the x,y plane of longitudinal symetry, B_x (x,y,0) and B_y (x,y,0). The value of the horizontal component on the mid-plane, B_x (0,y,0), for each of the four magnets is given in Table I.

Calculations in the y,z plane, giving B_y (0,y,z) and B_z (0,y,z), will be done as part of the final design.

In the calculations the coils were sized such that the current density was approximately 2500 A/in^2 (390 A/cm^2), a value consistent with pulsing CCM conductor (2" square x 1.125 ϕ) to 10 kA. At current densities much higher than this power requirements become large and pulsing more difficult. Lower current densities, with larger coils, result in the field dropping too slowly outside the aperture.

The coil inductances were calculated from $L = N\phi/I$ = flux linkages per amp. The DC power was obtained from $PDC = \rho J^2 V$ (ρ = resistivity, V = volume of copper in coil) and the resistance $R = PDC/I^2$.

Coil and Iron Parameters

The parameters of magnets which were found by S. Oh to be satisfactory are given in Table II.

Pulsing the Magnets

The magnets must be pulsed to reduce the AC power requirements. We propose to rennovate the existing 30" bubble chamber power supply, split it into two 10 kA/275 V units and power two magnets with each unit. The detailed coil design must

yield coil circuit resistances and inductances which match the capabilities of the power supply units. It is hoped that the magnets can be ramped from some low current, a few hundred amperes, to 10 kA and back down once per one minute Tevatron beam pulse.

The appendix contains an evaluation of the proposal to rennovate and remodel the 30" power supply.

Preliminary calculations, using the parameters of Table II, show that the two-magnet circuits can be charged and discharged in one minute, reducing the power dissipation to about one third of the DC value.

Preliminary Cost Estimate

In order to estimate the cost of the coils and iron yokes, we have used the cost per pound of these two items. The cost of coils for the large analysis magnets fabricated in the past three years, either at the Fermilab Magnet Facility or in industry, have averaged $2.00 per pound for conductor and $4.00 per pound for fabrication. Some copper CCM conductor is available for the coils, we use $0.50 per pound as the cost of preparing it for coil winding.

We have assumed that the iron yokes will be made of 8" low-carbon, scrap steel. This material has been used successfully for many magnets at Fermilab. A material cost of $200 per pound and a fabrication cost of $300 per pound is used.

The cost of each magnet and the cost of power supply, cooling water system, excavation and rigging is given in Table III. The excavation costs were calculated by N. Bosek (Experimental Areas Dept). The estimated capital cost, including 20% escalation and contingency, of this four-magnet system is $\$6.7 \times 10^6$. The 30-month operating cost is $\$1.5 \times 10^6$.

Schedule

At this point we can say only that the conventional magnet system can probably be built in the 2 - 2-1/2 years available.

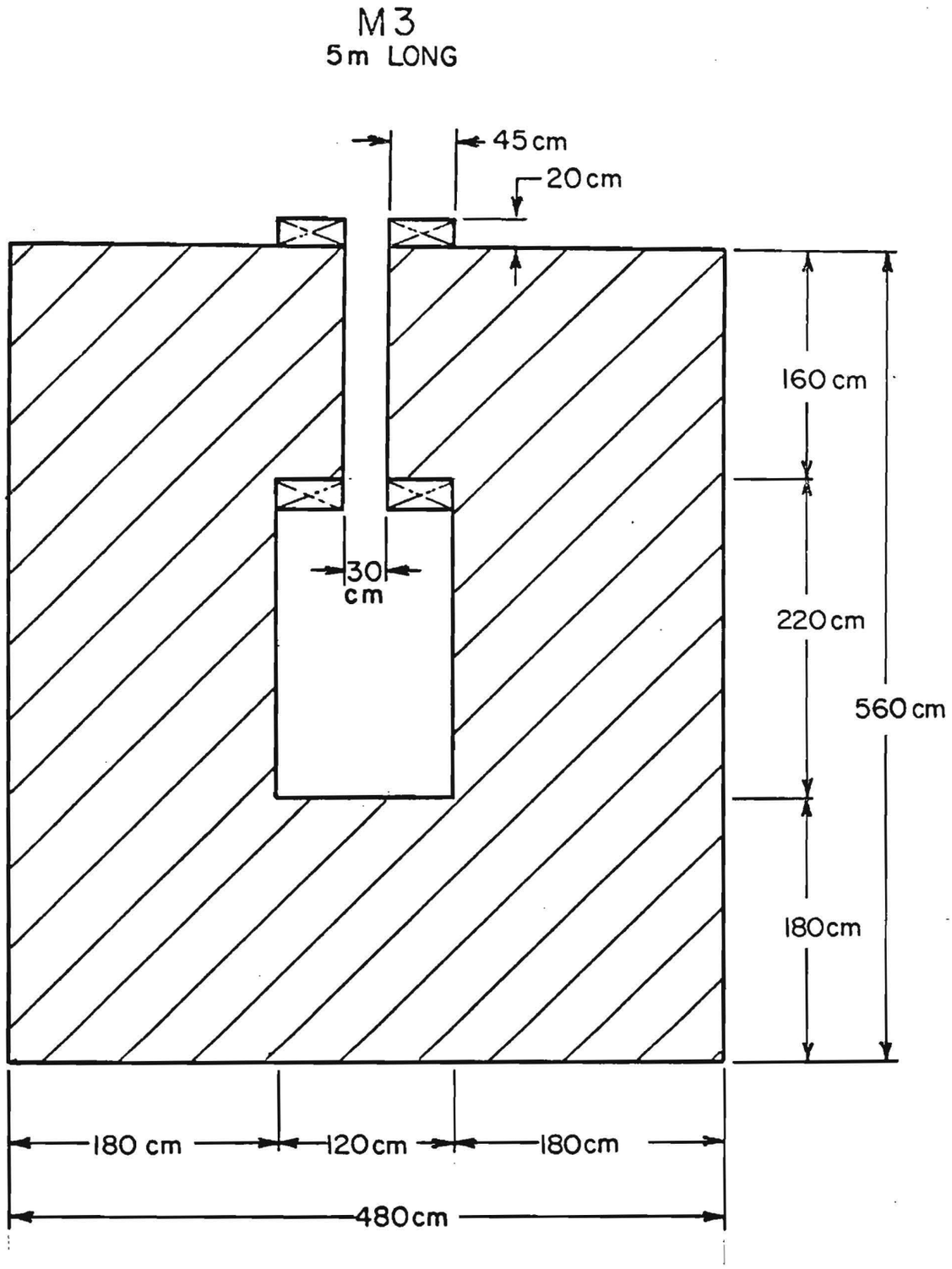
M3
5m LONG
45cm
20cm
160 cm
30
cm
220cm
560 cm
180cm
180 cm
120cm
180cm
480cm

Fig. 1.

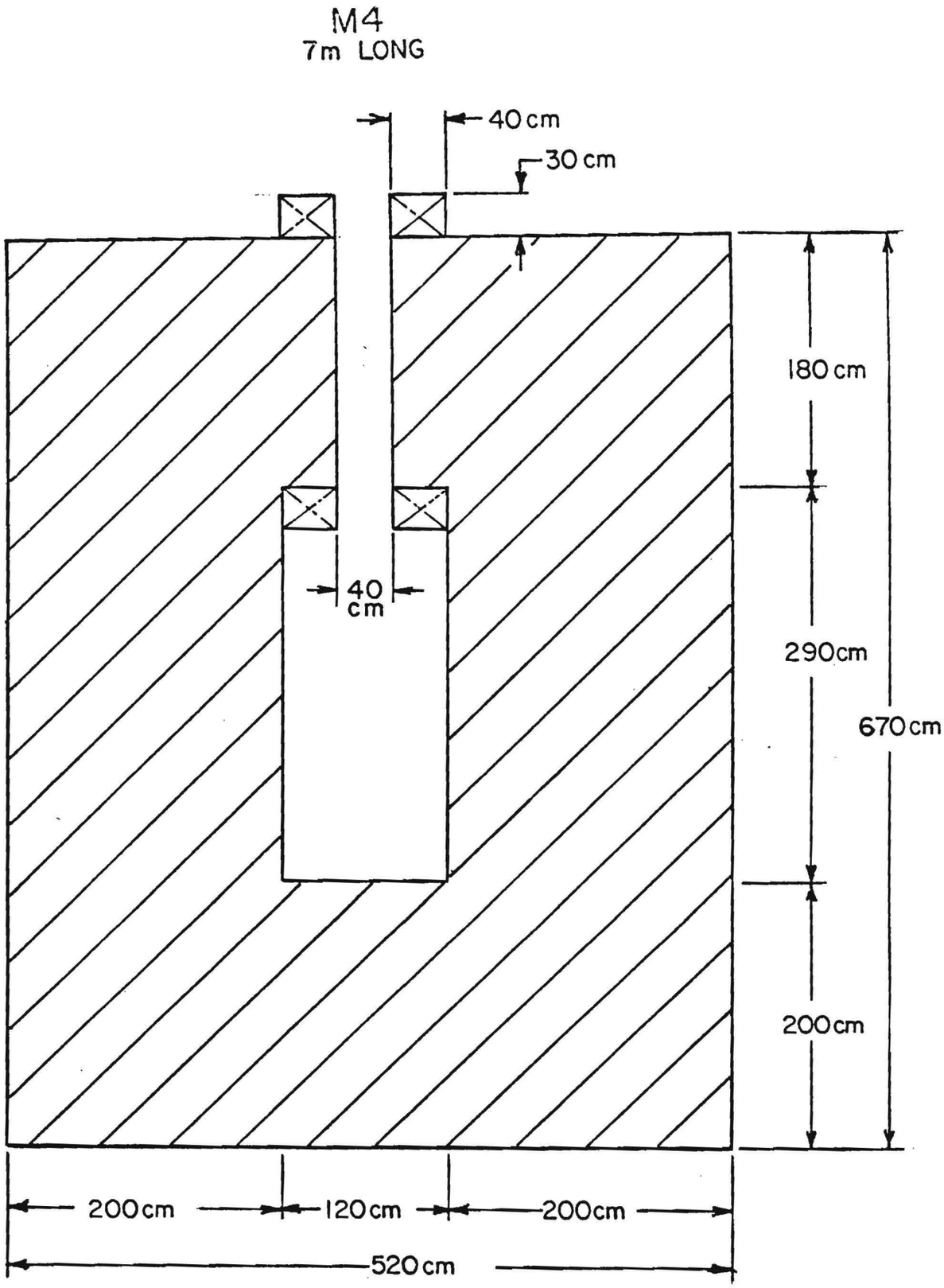
M4
7m LONG
40 cm
30 cm
180 cm
40
cm
290cm
670cm
200cm
200cm
120cm
200cm
520cm

Fig. 2.

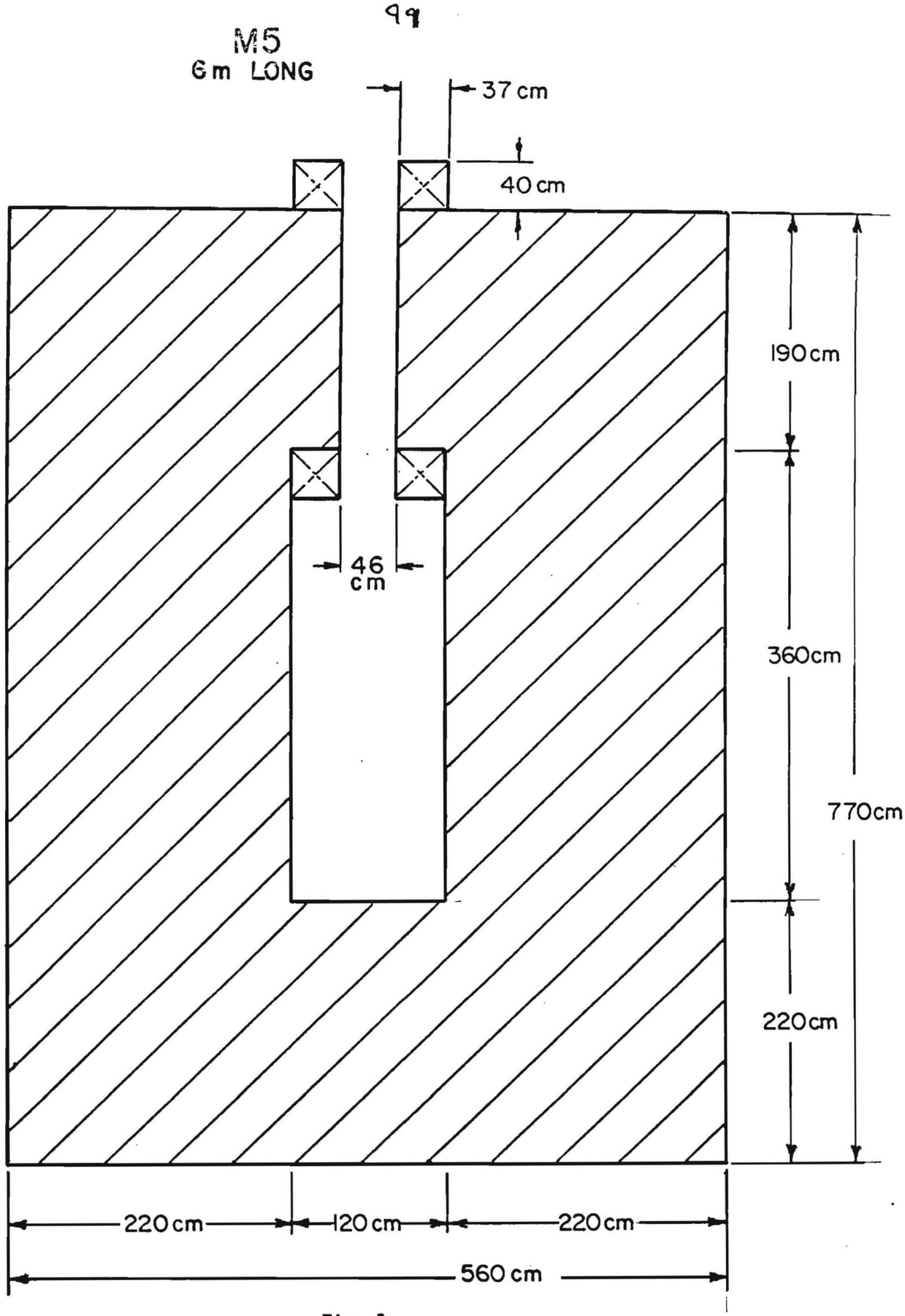
M5
6m LONG
37 cm
40 cm
190 cm
46 cm
360cm
770cm
220cm
220 cm
120 cm
220 cm
560 cm

Fig. 3.

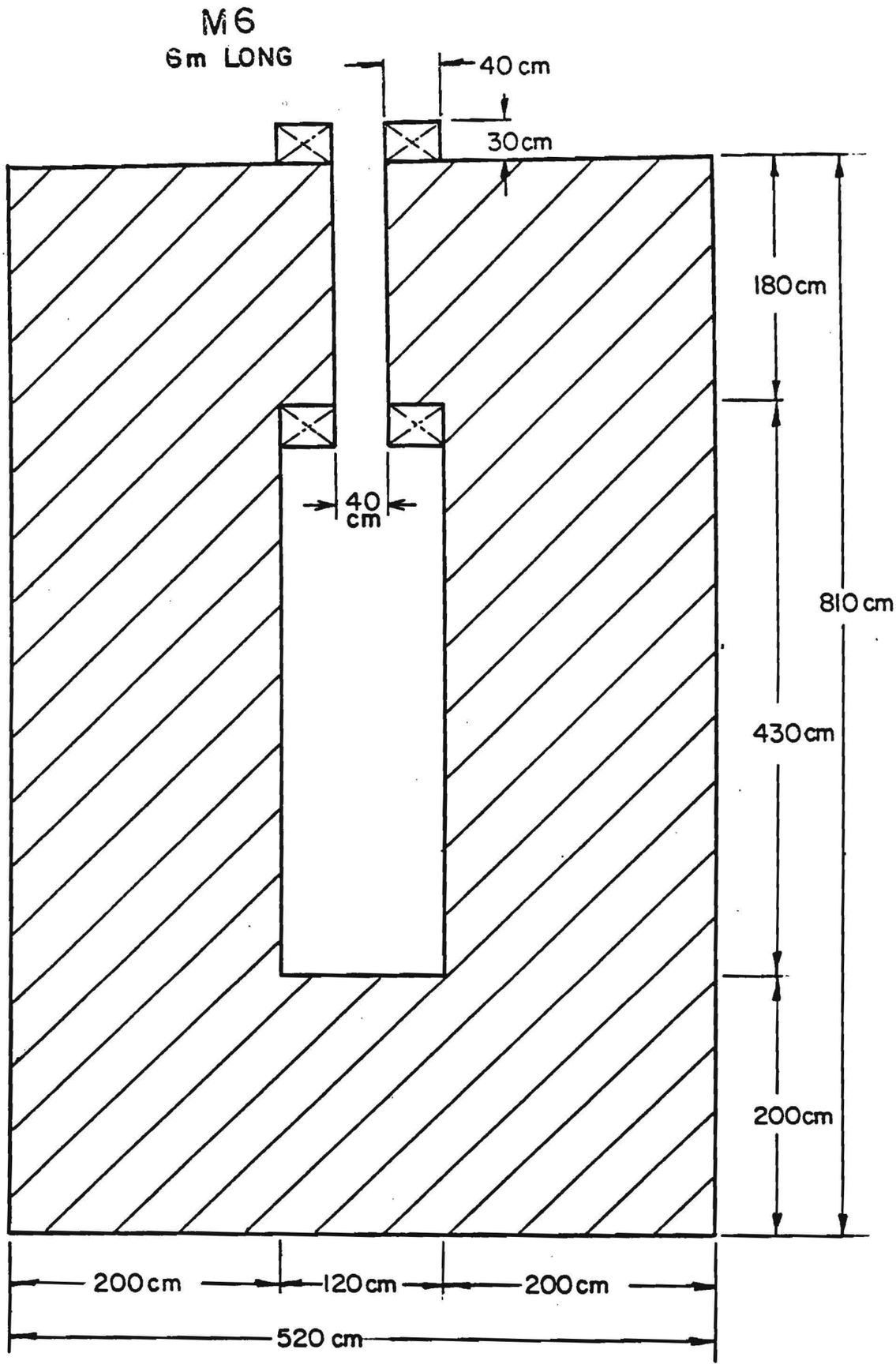
M6
6m LONG
40 cm
30cm
180cm
40
cm
810 cm
430cm
200cm
200cm
120cm
200cm
520 cm

Fig. 4.

Table I - Mid Plane Field Distribution

Vertical Position (cm)	B_x in tesla for magnets			
	M3	M4	M5	M6
400	-0.007	-0.010	-0.010	-0.012
350	-0.009	-0.013	-0.013	-0.015
300	-0.012	-0.018	-0.017	-0.020
250	-0.016	-0.023	-0.022	-0.026
200	-0.020	-0.027	-0.022	-0.030
150	-0.003	-0.026	-0.085	-0.021
100	0.440	0.961	1.209	0.958
50	1.927	1.944	1.951	1.944
0	2.000	2.000	2.000	2.000
-50	1.928	1.947	1.944	1.947
-100	0.425	0.953	1.214	0.947
-150	-0.038	-0.018	0.050	-0.032
-200	-0.051	-0.075	-0.072	-0.092
-250	-0.039	-0.066	-0.069	-0.082
-300	Iron	-0.052	-0.058	-0.069
-350	Iron	-0.034	-0.048	-0.058
-400	Iron	Iron	-0.036	-0.048
-450	Iron	Iron	-0.015	-0.037
-500	Iron	Iron	Iron	-0.022

Table II - Coil Parameters

Magnet	M3	M4	M5	M6	Total
kNI per half	348	445	488	450	
Coil size (cm - horiz x cm - vert)	45 x 20	40 x 30	37 x 40	40 x 30	
N per half	36	46	52	48	
I peak (A)	9667	9667	9375	9375	
L (H)	0.067	0.133	0.134	0.122	
R (Ω)	0.0125	0.0152	0.0121	0.0148	
τ = L/R (s)	5.36	8.75	11.07	8.24	
J_{cond} (A/cm^2)	515	492	440	500	
PDC (kw)	1170	1419	1065	1300	
Pulsed power (kW)	← 876.5 →		← 788.3 →		
Stored energy (MJ)	3.1	6.2	5.8	5.4	
Conductor weight (short tons)	23.0	30.7	34.0	27.2	

Table III - Preliminary Cost Estimate

Magnet	M3	M4	M5	M6	Total
Iron weight (tons)	1010	1823	1933	1848	6614 tons
Iron cost (k$) @ $500 per ton	505	912	967	924	$3308
Conductor weight (tons)	23.0	30.7	34.0	27.3	115 tons
Conductor cost (k$) copper @ $4000 per ton and 10% extra	100	0	0	120	$220
Cost fabrication cost (k$) @ $8000 per ton	184	246	272	218	$920
Manpower engineering and design of coils and iron (k$)	--	--	--	--	$250
Power supply renovation and remodeling	--	--	--	--	$100
Cooling water system	--	--	--	--	$10
Rigging iron and coils, at $60 per ton	--	--	--	--	$404
Conventional construction	--	--	--	--	$400

Capital cost	$5612 k
Escalation and contingency (20%)	1122 k
Total capital cost	$6734 k
Operating cost for 30 months	1530 k
Total cost - capital & operating	$8264 k

APPENDIX

TO: JIM WALKER

FROM: BOB TRENDLER

SUBJECT: 30" BC POWER SUPPLY

AT YOUR REQUEST, THE 30" B.C. POWER SUPPLY WAS EXAMINED TO DETERMINE ITS VIABILITY AS A POWER SUPPLY FOR THE PROMPT BEAM DUMP CONVENTIONAL MAGNETS. A GROUP CONSISTING OF AGE VISSER, STAN ORR, LEON BEVERLY, BILL WILLIAMS, WALT JASKIERNY, BOB INNES, JIM KILMER, AND MYSELF EXAMINED THE POWER SUPPLY AND THE SCHEMATICS.

IN SUMMARY, WE BELIEVE THE POWER SUPPLY CAN BE EASILY SPLIT INTO TWO 6φ 275 VOLT 10 KA UNITS. FURTHERMORE, THE UPGRADE WOULD REQUIRE NEW SCR ASSEMBLIES, IMPROVED FIRING CIRCUITS, IMPROVED FREEWHEELING DIODE CONNECTIONS, IMPROVED REGULATORS, AND SOME REWIRING. THE POWER SUPPLY WILL BE CAPABLE OF RAMPING. THE LOAD WILL, HOWEVER, WILL HAVE HAVE RESISTANCE AND INDUCTANCE PARAMETERS APPROPRIATE FOR THE 275 VOLT MAXIMUM OUTPUT AND THE RAMPING PERIOD.

WE WILL CONTINUE TO REVIEW THE UPGRADE REQUIREMENTS IN AN EFFORT TO PROVIDE A BETTER COST ESTIMATE. THE $100K ORIGINALLY ESTIMATED SHOULD BE MORE THAN ADEQUATE.

c.c. KEN STANFIELD
RON FAST

Cost Analysis of the 5T 8.4 m long Superconducting Version of the Prompt Neutrino Magnet System

Eddie Leung*

October 11, 1982

* Research Services Department

Preface

The revised cost analysis is based on 5T, 8.4 m long superconducting version of the Prompt Neutrino Magnet System. This represents a workable design with more engineering calculations perfomed on it and where possible, quotations from possible vendors have been solicited; therefore the numbers presented here are accurate to ± 15% easily. The cryostat itself (instead of across the gap tension links) is used as the major support for the body forces because of possible adverse effects introduced to physics from the latter approach. The positive magnetic field profile provides a slightly higher overall Integral B-dl while the increase in length from 7 m to 8.4 m escalates the capital cost from $5.1 M to $5.55 M.

Introduction

The Prompt Neutrino Magnet System calls for a bending power of 60→70 Tm for the removal of unwanted muons. A 5 T, 8.4 m superconducting magnet MSC is provided an an alternative to the conventional magnets M3C→M6C. The first two magnets, M1C and M2C, are the same for both the conventional and superconducting cases and they are designed to shield off most of the nuclear radiation from subsequent magnets. A preliminary design and cost analysis of this superconducting magnet is presented in this report. Figure 1 and 2 depict the arrangement of the magnets in the conventional and superconducting beamlines while Fig. 3(a) and (b) show sections of MSC. A cost comparison to the conventional case is also included.

Magnetic Field Calculation and Coil Design

Physics requirement calls for a special magnetic field profile. The magnetostatic parameters for this four-coil design were calculated using the computer code LINDA. The vertical distribution of the horizontal field on the mid plane is given in Fig. 4. This 81 MJ magnet will have a total of 6 coils (both halves), each race-track in configuration and cryogenically stable in design. Since the different coils lie in different field regions, the optimized current density is different in each coil. These are selected in accordance with the Stekly critercon for fully cryostable magnets. Calculated coil parameters are presented in Table I.

TABLE I COIL PARAMETERS

Items	Coil #1	Coil #2	Coil #3	Coil #4	Units	Remarks
By (AVG)	4.34	2.39	0.41	-1.08	T	
Bx (AVG)	-.13	-0.27	-.26	-.19	T	
B (Max)	6.1	4.30	1.5	1.20	T	
NI	0.941	1.076	1.210	-0.538	10^6 A-turns	3.197×10^6
I_{op}, max. operating current	2000	2000	2000	2000	A	
I_R, fully recovery current	2382	2459	2583	2783	A	
Coil dimensions	7.2 x 0.8	7.2 x 1.4	7.2 x 2.8	7.2 x 3.0	m x m	
Coil length	16.0 (52.5)	17.2 (56.4)	20 (65.6)	20.4 (66.9)	m (ft)	
Conductor volume	10.82	12.79	7.45	5.06	ft^3	
Total (both halves) Conductor volume			72.24		ft^3	
Total weight			39732		lbs	Using 550 lbs/ft^3
Cost (at $8/lb)			318		K$	

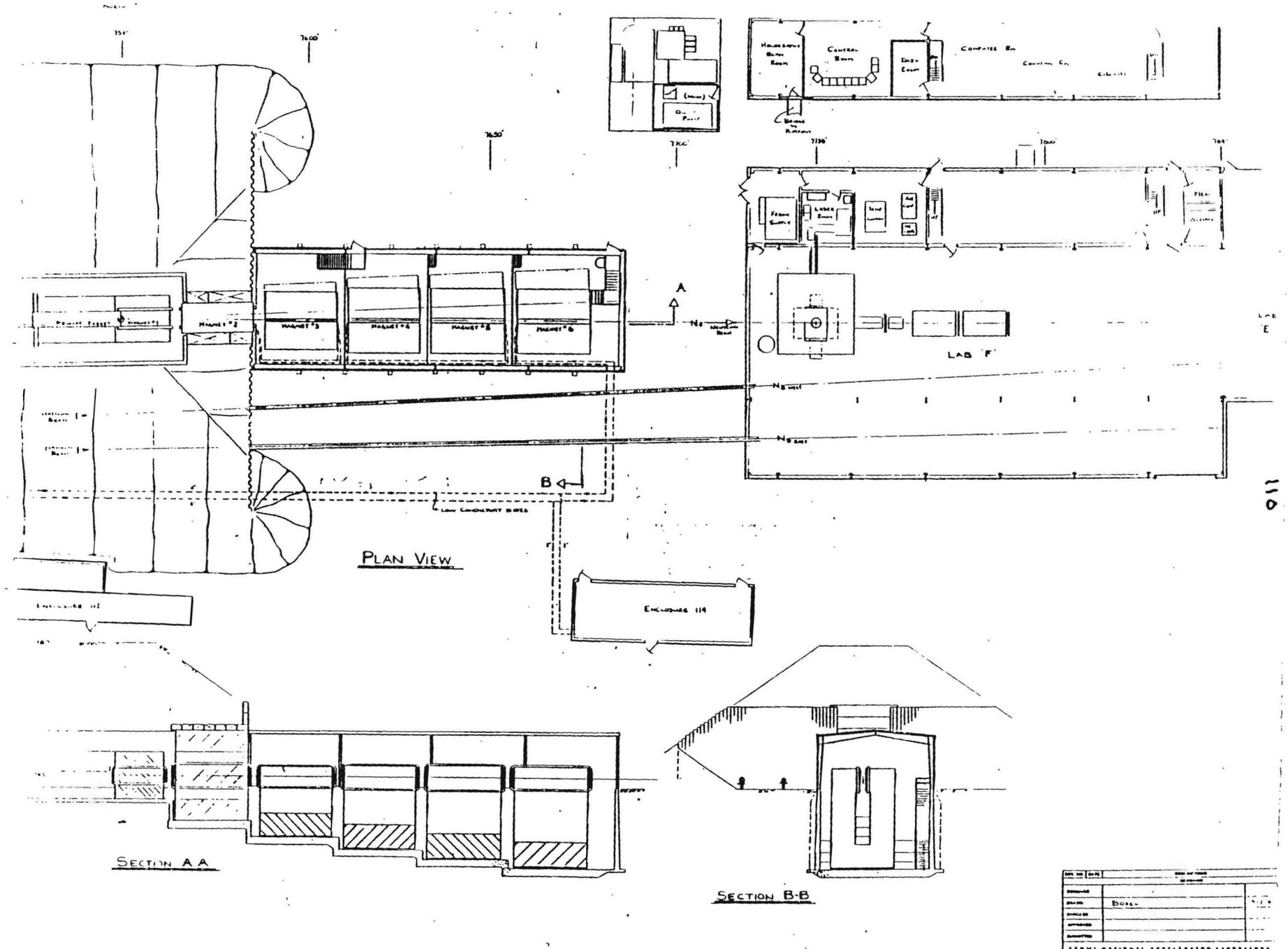

Fig. 1 Conventional System

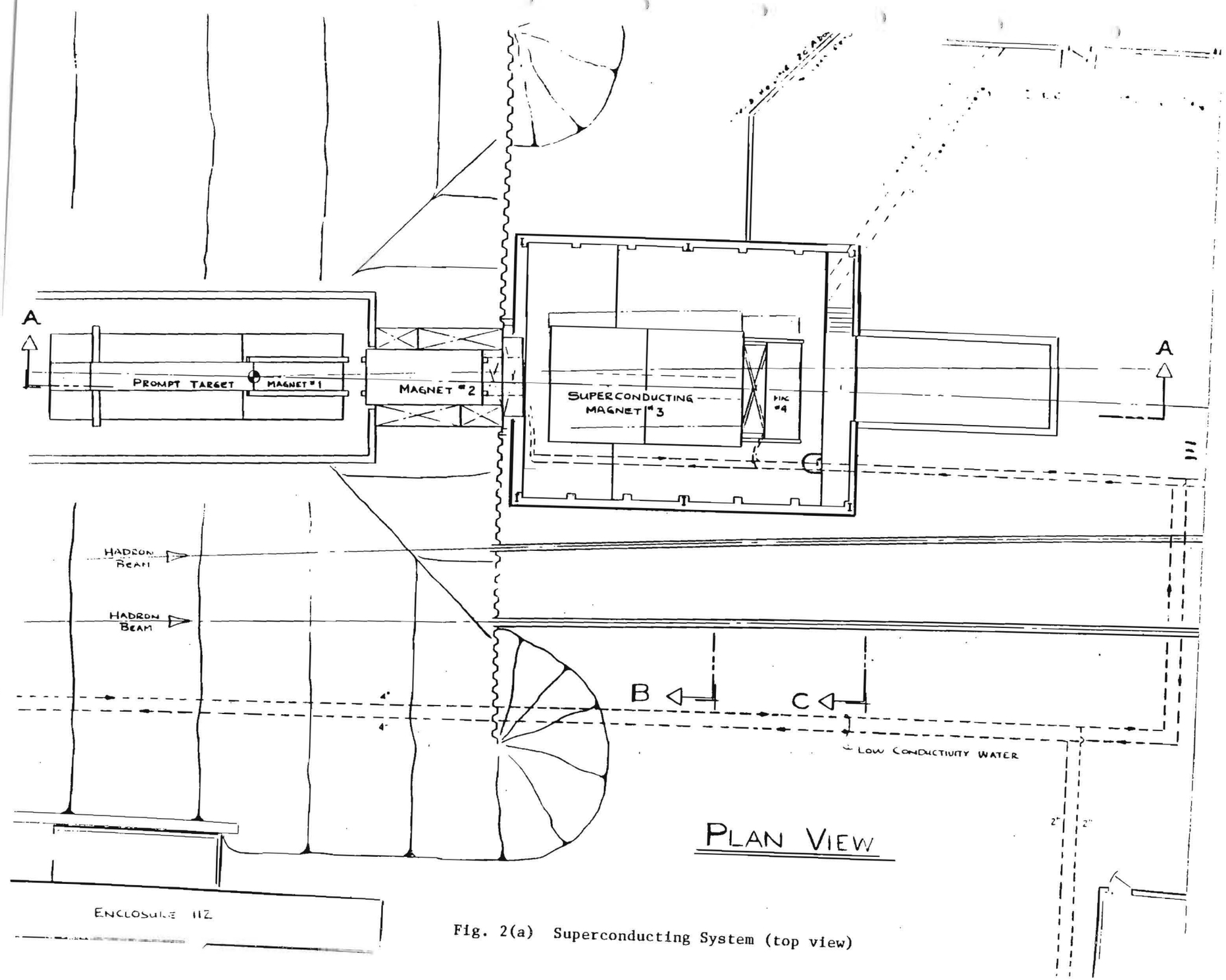

Fig. 2(a) Superconducting System (top view)

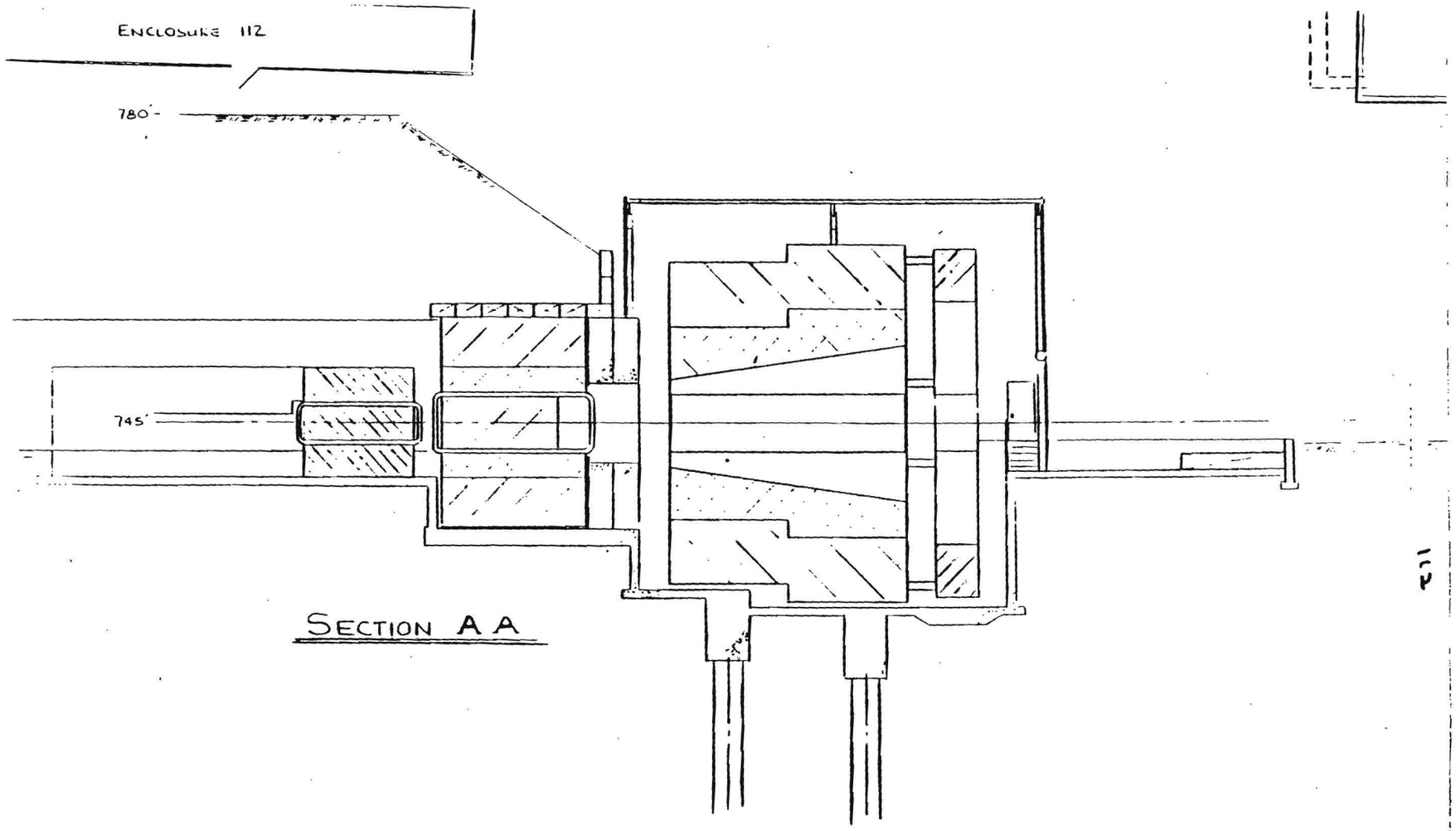

Fig. 2(b) Superconducting System (side view)

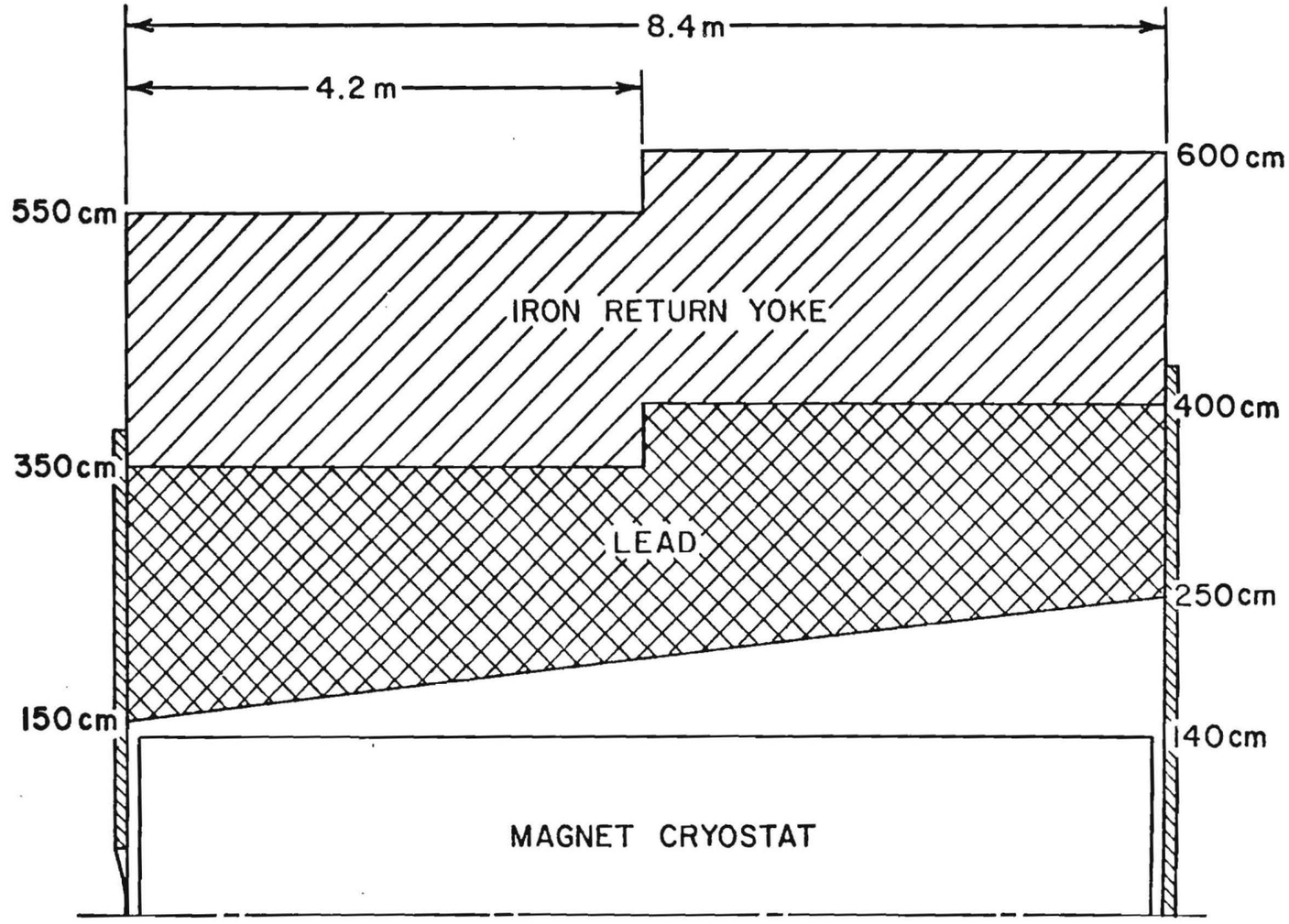

Fig. 3(a) Longitudinal Section of Magnet

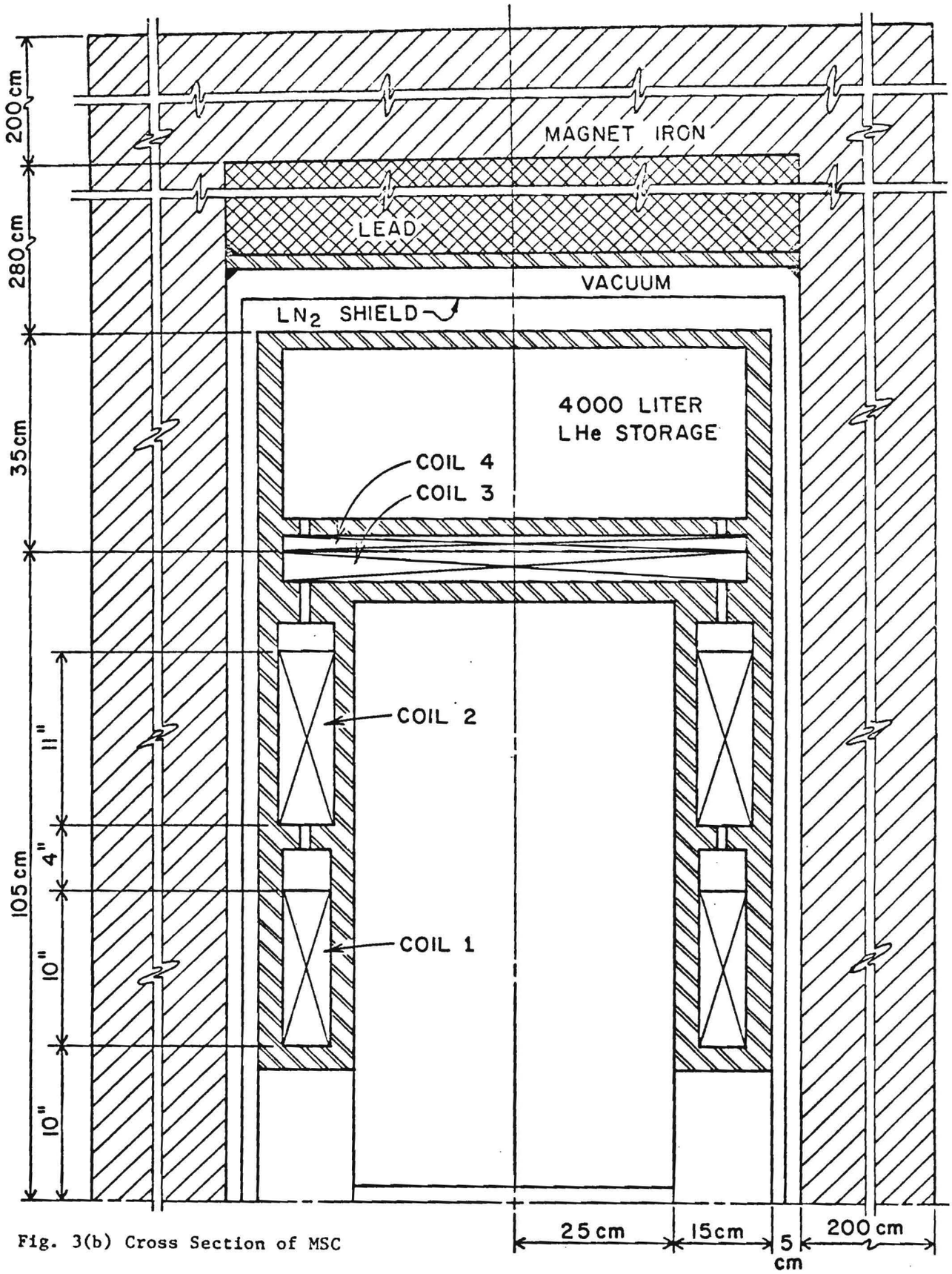

Fig. 3(b) Cross Section of MSC

Fig. 4. The Vertical Distribution of Horizontal Field on the Mid-Plane

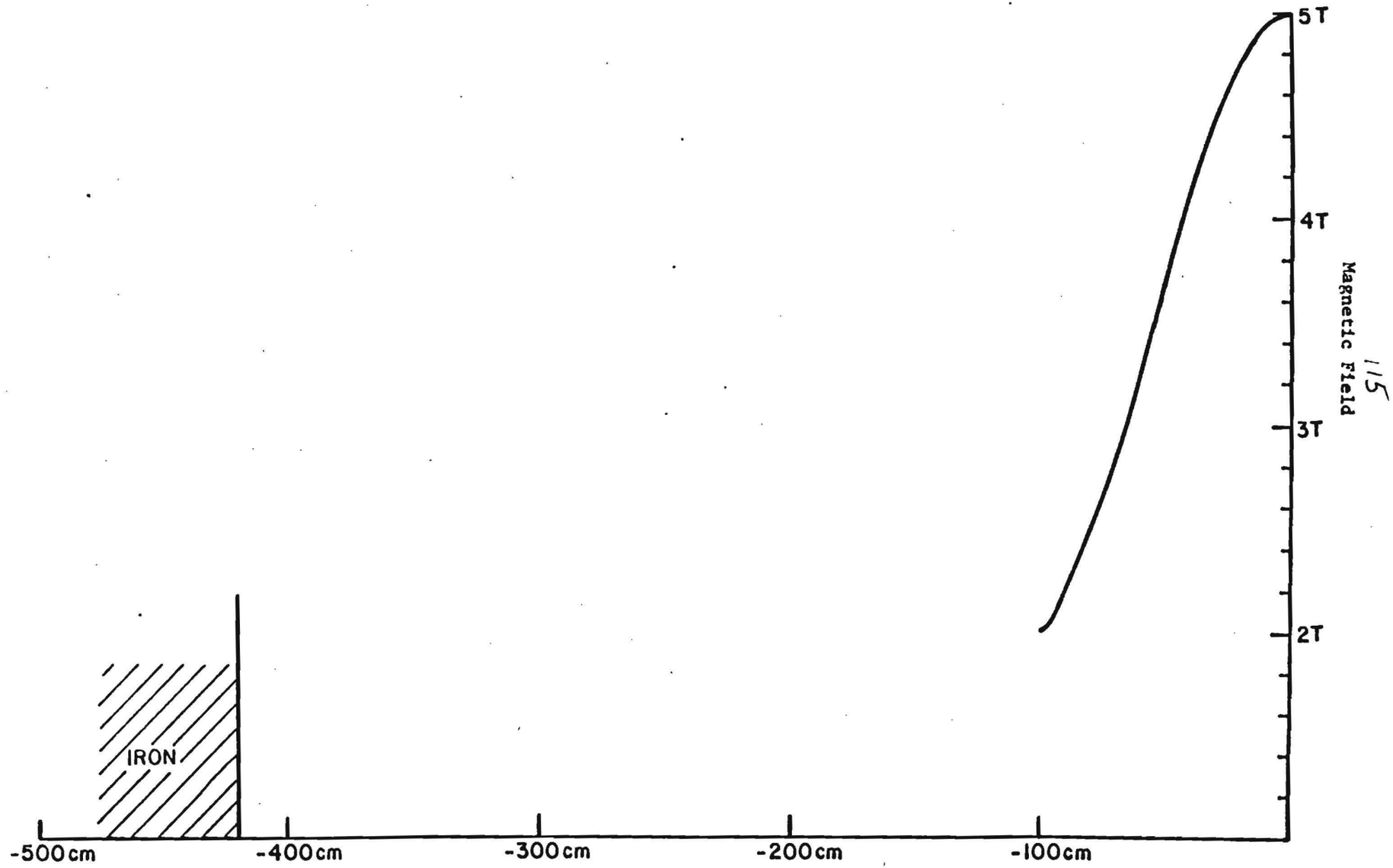

(a) The Positive Field Profile

Distance From Center of Magnet

(b) The Return Field Above the Coils

Distance From Center of Magnet

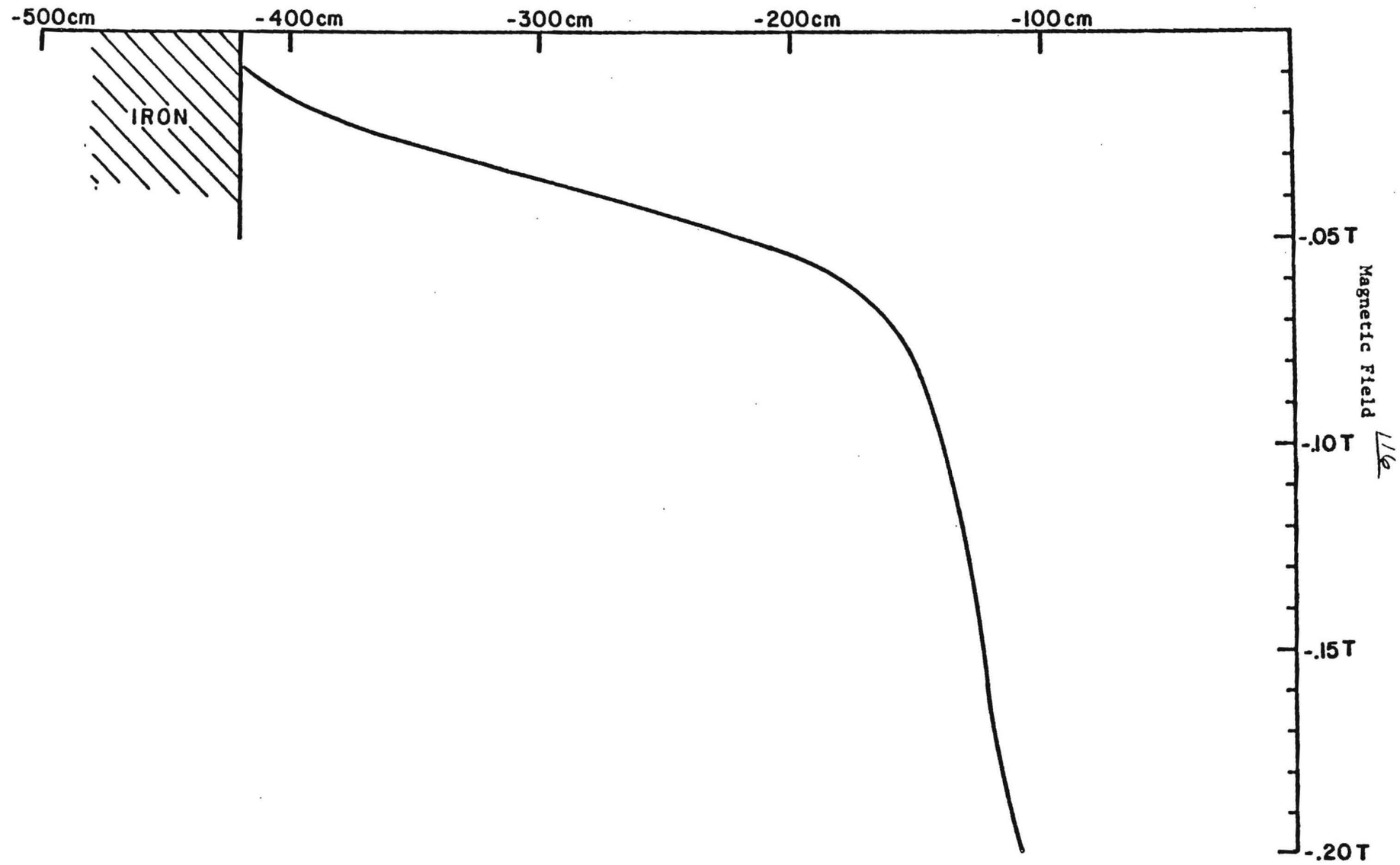

116

Using a unit cost of $8/lb, the total conductor cost would be about $318 K. A quotation obtained from AIRCO, Ltd. for a viable conductor design is $ 318 K. We shall use this number for estimation of the conductor cost.

Structural Calculations

The magnitude and direction of the forces acting on the various coils are given in Fig. 6. The horizontal forces acting on coils #3 and #4 are supported against the internal coil structure while those on coil #1 and coil #2 are reacted against the helium cryostat. The forces are high but by reacting the forces internally, we can cut down the heat leak into the helium compartment. Similarly, we can support the vertical forces acting on the various coils. An ANSYS (3D finite element structural code) run is being performed to check the analytic calculations performed so far (App. B).

Twenty short I-beam shaped rollers on rail and side G-10 bumpers are used to support the 110,000 lbs magnet cold mass and the magnet de-centering forces. Cost of the supports total ~ $50 K.

Preliminary thickness calculation for the various walls of the helium cryostat were performed and the results summarized in Fig. 3(b). The upper half of the cryostat provides a storage capacity of 4000 liters of liquid helium. A total of 70,000 lbs of stainless steel 304 is required for the construction of the helium shell. The material cost would be $2.5/lb and the fabrication cost an additional $7.5/lb. The helium vessel cost

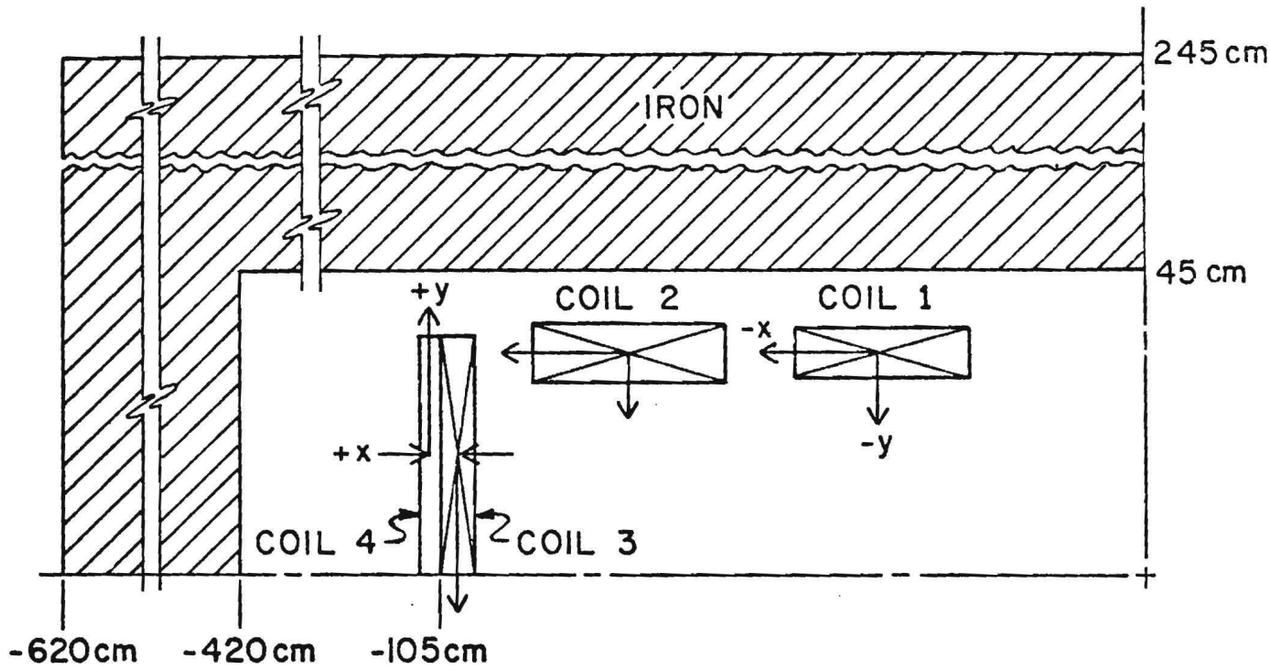

Items	Coil #1	Coil #2	Coil #3	Coil #4	Units
Fx	-2.33×10^4	-1.47×10^4	-2832	+3318	lbs/in
Fy	-698.5	-1659	-1796	+583.6	lbs/in
Px	-7767	-4200	-192	+225	psi
Py	-69.85	-150.8	-898	+583.6	psi

Fig. 6 Forces on Coil

$700 K.

Radiation Shield and Vacuum Box

The LN_2 temperature radiation shield is to be construted out of 3/64" thick copper. With a surface area of 1800 ft^2, the weight of copper required is 3600 lbs; at $5.5/lb (material and fabrication), the cost is $20 K. Adding $4 K for fabrication of standoffs and $8 K for purchase of NRC-2 thermal insulation and aluminum tape. Total cost ∾ $32 K.

For the vacuum box, it is proposed to use part of the iron return yoke as part of the box (6" on each side, except 12" on the bottom where the cold mass supports also have to be housed in). The end plates are constructed out of 2" thick steel plate. The weight required is 40,000 lbs. At $6/lb (material and fabrication) total cost for the vacuum box ∾ $240 K.

Fixtures

It is difficult to estimate the cost for fixturing at this stage, but the following are perhaps representative:*

Coil winding fixture	$ 50 K
Assembly fixture	$ 25 K
Handling fixture	$ 25 K
Total	$100 K

*The in-house fixtures used for the assembly of the coils for E-605 M 1/2 magnet cost $84 K.

Thermal Analysis

(1) Radiation heat transfer from LN_2 temperature radiation shield: Applying the new 77 K→4.2 K insulation scheme† as that used in CCM and 32" B.C. (3M #425 pure aluminum tape on the helium cryostat plus an additional 12 layers of NRC-2 - 500°A thermal insulation on the outside), we can use a heat leak number of 2 mW/ft^2 for calculation. A surface area of 1800 ft^2 will yield a heat load of 3.6 W.

(2) From current leads: Calculated energy of the magnet is ∽ 81 MJ. Choosing a current of 2000 A, the calculated inductane of the magnet is ∽ 40.5 H and a terminal voltage of 333 volts would appear for an L/R of ∽ 2 minute. This is reasonable. So we would nominally choose 2000 A to be our operating current. For extra flexibility in doing physics, it is requested that each of the 4 pairs of coil to have separate current leads. Using AMI∇ leads, the heat load is 2.8 ℓ/hr/1000 A pair; hence total heat leak via the current leads during operation is 2.8 x 2 x 4 = 22.4 ℓ/hr and when the current is off, equals to ∽ .4 x 22.4 ∽ 8.96 ℓ/hr. This is a rather high price to pay. We can always have the option of using 1000 A coils #3 and coil #4, in this case, corresponding LHe boil-off numbers would be 16.8 ℓ/hr during operation and 6.72 ℓ/hr when the current is off.

(3) Heat leak down the chimney and misc. paths

∽ 1 W

†E. Leung, R. Fast, J. Heim and H. Hart, Advances in Cryogenic Engineering, Vol. 25, p. 489 (1981).

∇American Magnetic Incorporated.

(4) Heat leak through the 5" cold mass supports

$\leq$ 1 W

Total heat load into the helium system

$\simeq$ 17 W (or 24.2 ℓ/hr)

Magnet Cost Summary

The above costs are summarized:

Superconductor	$ 318 K
Helium cryostat Coil support structure	$ 700 K
Cold mass support structure	$ 50 K
Radiation shield	$ 30 K
Fixtures	$ 100 K
Vacuum box	$ 240 K
Total	$1438 K

Manpower Required

Assuming a project duration of 2 years, the following manpower is required:

Personnel	Man-yr.	Annual Cost	Cost
Project Manager/ engineer	2	$45 K	$ 90 K
Engineers (2)	4	$45 K	$180 K
Vendor liason	2	$35 K	$ 70 K
Designer	2	$35 K	$ 70 K

Draftsman	2	$30 K	$ 60 K
Technicians (2 in 1st half year) (6 in last 1-1/2 year)	10	$26 K	$260 K
Tech. Specialist	2	$35 K	$ 70 K
Machinist	1-1/2	$28 K	$ 42 K
Welder	1-1/2	$28 K	$ 42 K
Total			$884 K

The sucessful completion of the project within 2 years depends very much so on the availability of the right number and kind of personnel at the correct time.

Iron Yoke

Figure 3(a) shows a longitudinal section of the magnet with iron. 3814 tons of iron are required for flux return. Field calculations have been done to optimize the use of the iron such that the field inside iron is ∿ 1.73 T. At a cost of $500/ton, total cost of iron = $1907 K. Cost of rigging, piling the iron and surveying at $60/ton would amount to another $229 K.

Refrigeration, Power Supply and Instrumentation

(a) Refrigeration: Wes Smart of the Experimental Facility suggested that the most economic way is to have a satellite for both MSC and the 32" B.C. Total cost for a satellite (and control) is ∿ $650 K. Appropriating $150 K to the 32" B.C. project, the cost here is $500 K. Allowing $50 K for building of transfer lines and dewars, the total is $550 K.

(b) Power Supply: At 2 KA, the inductance of the magnet is 40.5 H. In order to charge the magnet in 1 hour, approximately 40 V is required. Four such power supplies would cost $100 K, the dump resistor, dc contractor and cable would probably cost $15 K and $10 K respectively.

(c) Instrumentation: This includes the various current, voltage, temperature, pressure, stress and refrigerator parameters to be monitored and read. An interlock and quench protection system has to be installed also. The whole system (sensing, readout and interlock) could cost $60 K. (Breakdown: $7 K for current leads, $43 K for control system and $10 K for other instrumentations).

Excavation

Civil engineering figures are provided by Norm Bosek of the Experimental Facility. This includes a thin metal building, preparation of foundation for magnet and all the necessary civil constrution items. The total cost is $357 K.

Total System Cost Breakdown

Coils	$1438 K	±20%
Iron	$1907 K	±10%
Manpower	$ 884 K	±15%
Power Supply & Instrumentation	$ 185 K	±10%
Refrigeration & Cryogenic System	$ 550 K	±10%
Excavation	$ 357 K	± 5%
Rigging, Surveying	$ 229 K	± 5%
Total Capital Cost:	$ 5550 K	

5 year operating cost at 250 KW x 50% duty factor ~ $225 K

Total Project Cost = $5550 + $225 = $5775 K

This cost estimate number is probably accurate to ± 15%.

Cost Comparison to Other Magnets

The capital costs for a number of magnets either of similar configuration (UTSI, CDIF, SC and U25 are all MHD type dipoles) to MSC or that we have concrete cost numbers on because they were built in Fermilab (CCM, 4 ft., 32" B.C. and 15' B.C.), are plotted against their respective stored energy in Fig. 7. With the exception of the 15' B.C. which was designed in ANL and which utilized most of the engineering development and research of the 12' B.C., we can see that there is a positive linear correlation between the two parameters considered and that the capital price tag of $5.55 M for the superconducting version of the Prompt Neutrino Magnet System is a reasonable one.

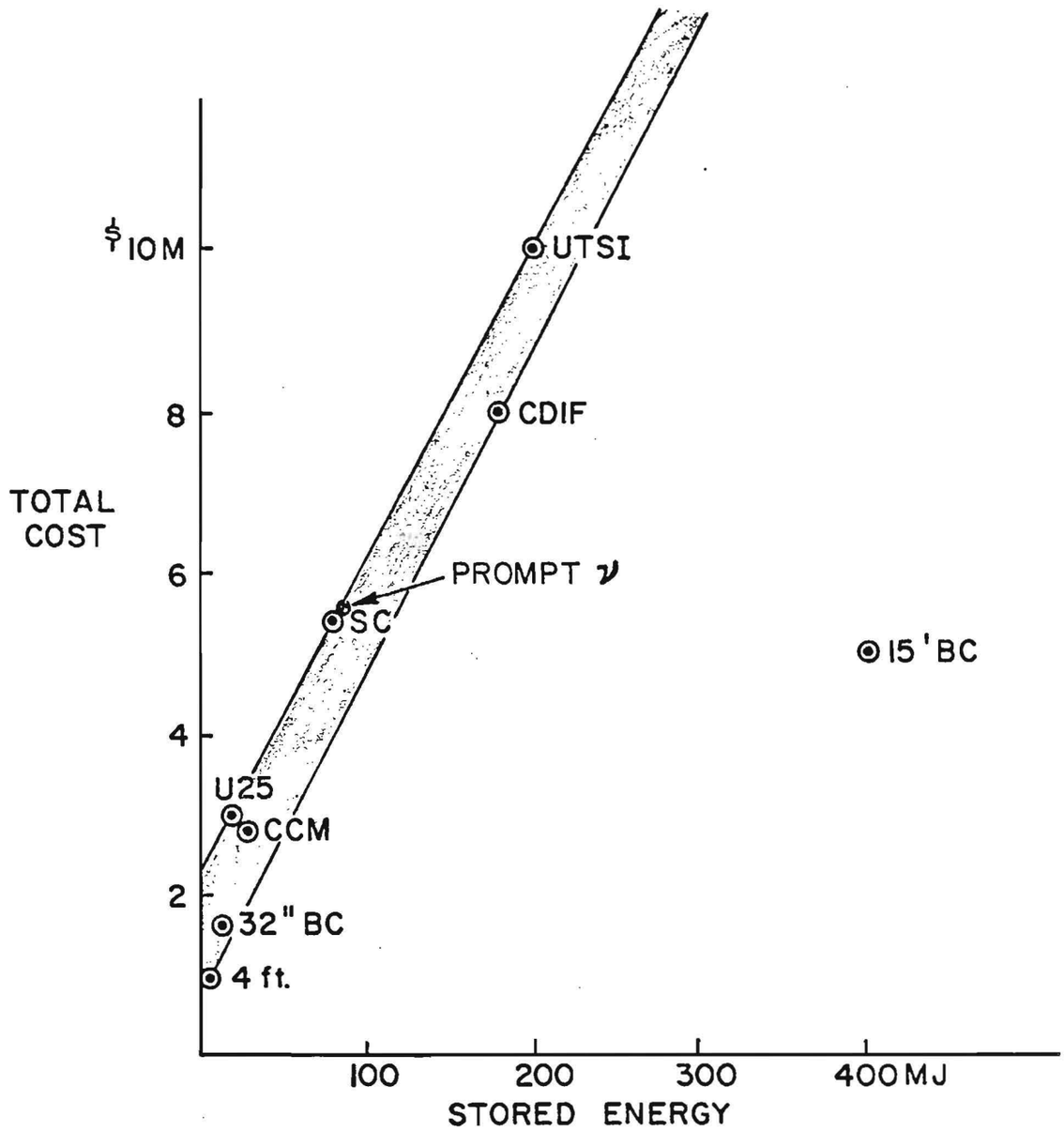

Capital Cost of Magnets vs Stored Energy

Prompt Neutrino Facility

Conventional Magnets M1 and M2

The M1, or target magnet, is the same whether the muon spoiler system is conventional or superconducting. The magnet is all iron except for a stainless steel portion between the coils, as shown in Fig. 1. Since the M1 magnet is very close to the target, the coil and associated water plumbing must be radiation resistant. The iron in the center portion should be magnetized to 2.1 T.

The M2 magnet is somewhat different for the conventional and superconducting cases. For the conventional case M2 is an all-iron magnet shown in Fig. 2. If the system is superconducting the downstream 1 m of the useful volume is air. The field in the useful region is 2.0 T.

The coil parameters are given in Table 1. To reduce the power required, the current density is quite low, $\sim$600 A/in^2 (93 A/cm^2) and the coils are operated DC.

A preliminary cost estimate is given in Table II, using \$500 per ton for the iron yoke, \$2.00 per pound for conductor, and \$4.00 per pound for coil fabrication.

TABLE I

Coil Parameters,

M1 and M2 Magnets

Magnet	M1	M2	Total
kNI per half	25	25	--
Coil size (cm - horizontal x cm - vertical)	25 x 15	25 x 15	--
N per half	15	15	--
I (A)	1667	1667	--
L (H)	0.091	0.179	0.27
R (Ω)	0.0027	0.0036	0.0063
τ = L/R (S)	33.7	50.0	42.9
J_{cond} (A/cm^2)	93	93	--
PDC (kW)	7.5	10.0	17.5
Conductor weight (short tons)	5.5	7.3	12.8

TABLE II

Preliminary Cost Estimate

M1 and M2 Magnets

Magnets	M1	M2	Total	Units
Iron weight	430	750	1180	tons
Iron cost, $500 per ton	215	375	590	K$
Stainless weight	11.3	47	58.3	tons
Stainless cost, @$2.5 per lb	57	--	292	K$
Conductor weight	5.5	7.3	12.8	tons
Conductor cost, @$4000 per ton, plus 10% extra	24.2	32.1	56.3	K$
Coil fabrication @$8000 per ton	44	58.4	102.4	K$
Manpower - engineering and design of coils and iron	--	--	25	K$
Power supply (2000 A, 20 V)	--	--	20	K$
Cooling water system, closed cycle	--	--	25	K$
Rigging, @$60 per ton	--	--	75	K$
	Capital Cost		1186	K$
	Escalation and contingency (20%)		237	K$
	Total capital cost		1423	K$

M1
4m LONG

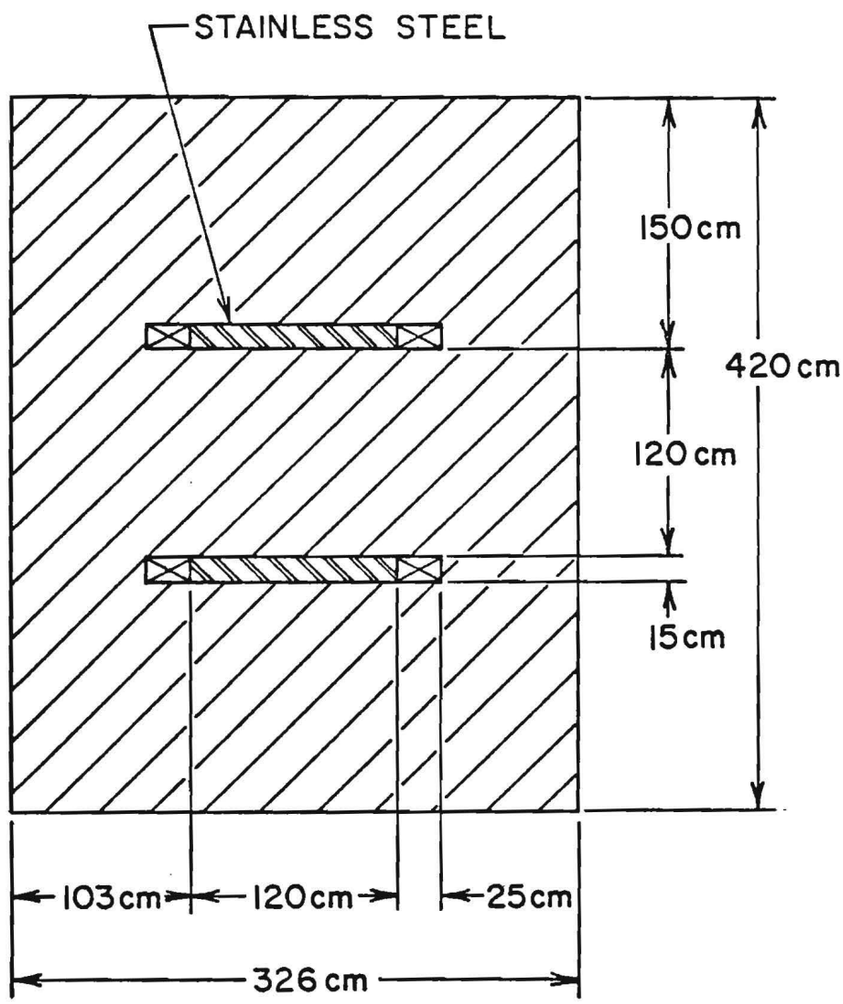
STAINLESS STEEL
150 cm
420 cm
120 cm
15 cm
103 cm
120 cm
25 cm
326 cm

M2
5m LONG

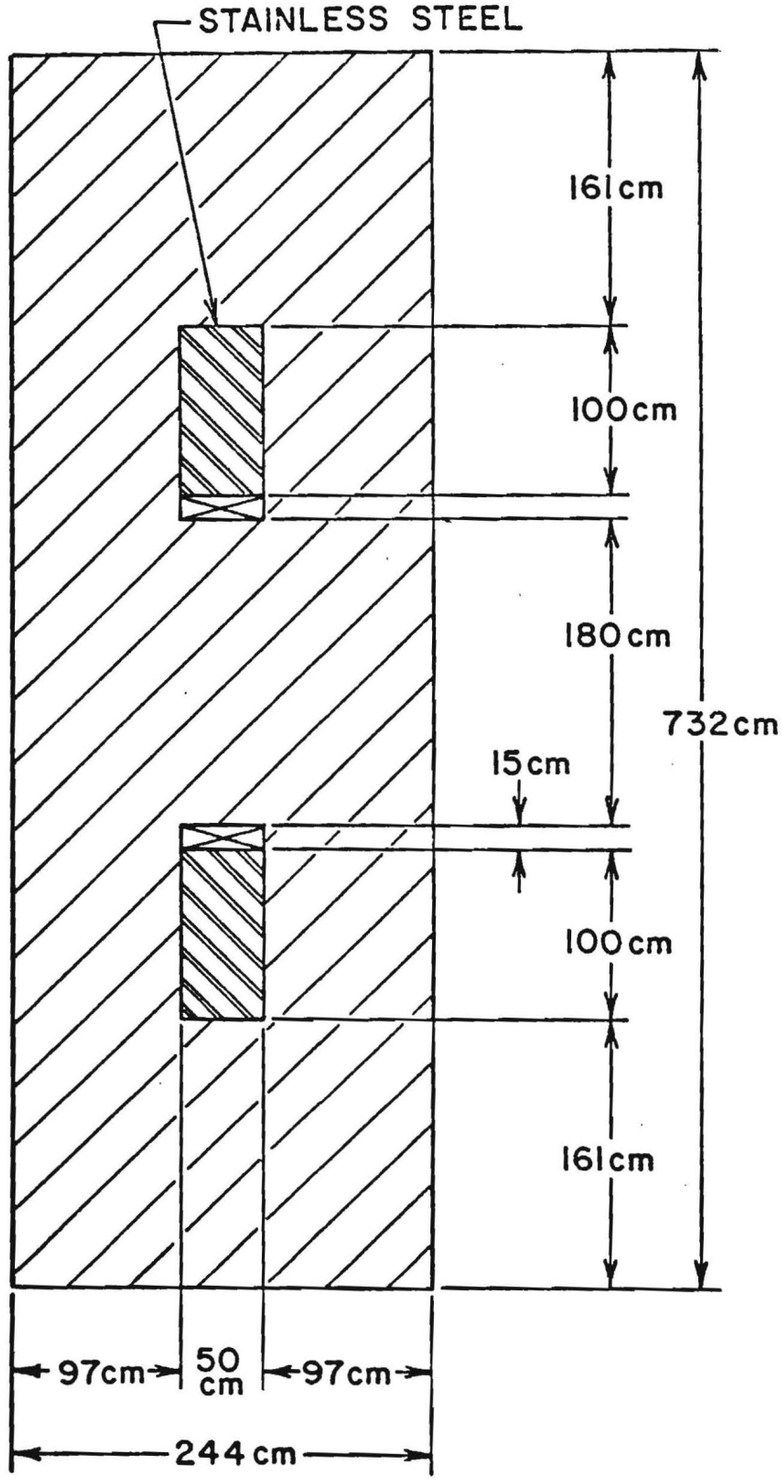
STAINLESS STEEL
161cm
100cm
180cm
732cm
15cm
100cm
161cm
97cm
50 cm
97cm
244 cm

Comparison of Cost of Conventional and Superconducting System

R.W. Fast, E.M.W. Leung
October 14, 1982

ITEMS FOR COMPARISON	CONVENTIONAL M3C→M6C	SUPERCONDUCTING MSC
Coils (including radiation shield and cryostat and vacuum box in superconducting case)	1140 K$	1438 K$
Iron (at $500/ton)	3308 K$	1907 K$
Manpower (including only design and engineering manpower for conventional case)	250 K$	884 K$
Power supply and instruments	100 K$	185 K$
Refrigeration for S/C	---	550 K$
Cooling water for conventional	10 K$	---
Conventional construction	400 K$	357 K$
Rigging, cost in piling iron and surveying (at $60/ton)	404 K$	229 K$
Capital cost	5612 K$	5550 K$
Escalation and contingency (20%)	1122 K$	1110 K$
Total capital cost	6734 K$	6660 K$
5 year operation cost	at 1.5 MW (pulsed) & 50% duty factor - ∿1530 K$	at 250 KW x 50% duty factor ∿225 K$
Total cost (C + O)	8264 K$	6885 K$

Energy Deposition in the Superconducting Active Muon Shield

Michael W. Peters

11/4/82

In the prefered design for the active muon shield in the prompt neutrino beam the deflected muons pass through superconducting coils 3 and 4 where they close over the upstream and downstream ends of the magnet (See Figure 1). These coils are well shielded against neutrons by the solid magnets M1 and M2 but the muon flux must be examined to insure that the energy deposition does not exceed the quench point for the superconducting material used.

Figure 2 of this note gives the vertical distribution of muons in narrow vertical band extending ± 5 cm horizontally about the midline. In the coil region the maximum number of muons per 10^{13} incident protons is $0.8 \cdot 10^9$ in a 20 cm by 10 cm bin. Thus the peak areal density is $0.4 \cdot 10^7$ muons/cm^2. Using an energy loss rate of 12.9 MeV/cm (Cu), we calculate an energy deposition of $5.2 \cdot 10^7$ MeV/cm^3 or .008 mJ/cm^3 per beam burst. This would result in a local temperature rise of the conductor of about 0.1 Kelvin which is completely acceptable.

Figure 1

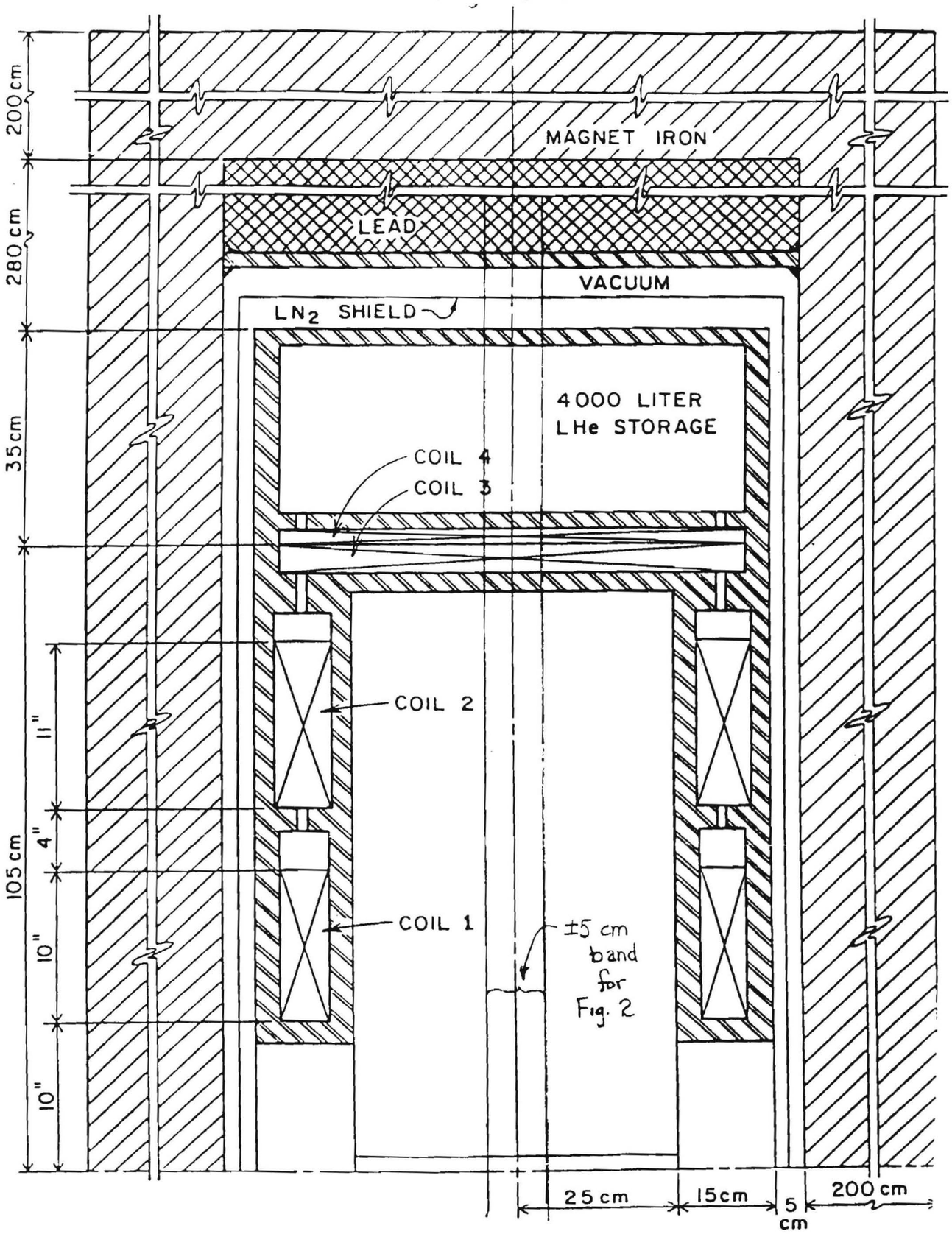
200 cm
280 cm
35 cm
105 cm
11"
4"
10"
10"
MAGNET IRON
LEAD
VACUUM
LN2 SHIELD
4000 LITER
LHe STORAGE
COIL 4
COIL 3
COIL 2
COIL 1
±5 cm
band
for
Fig. 2
25 cm
15cm
5
cm
200 cm

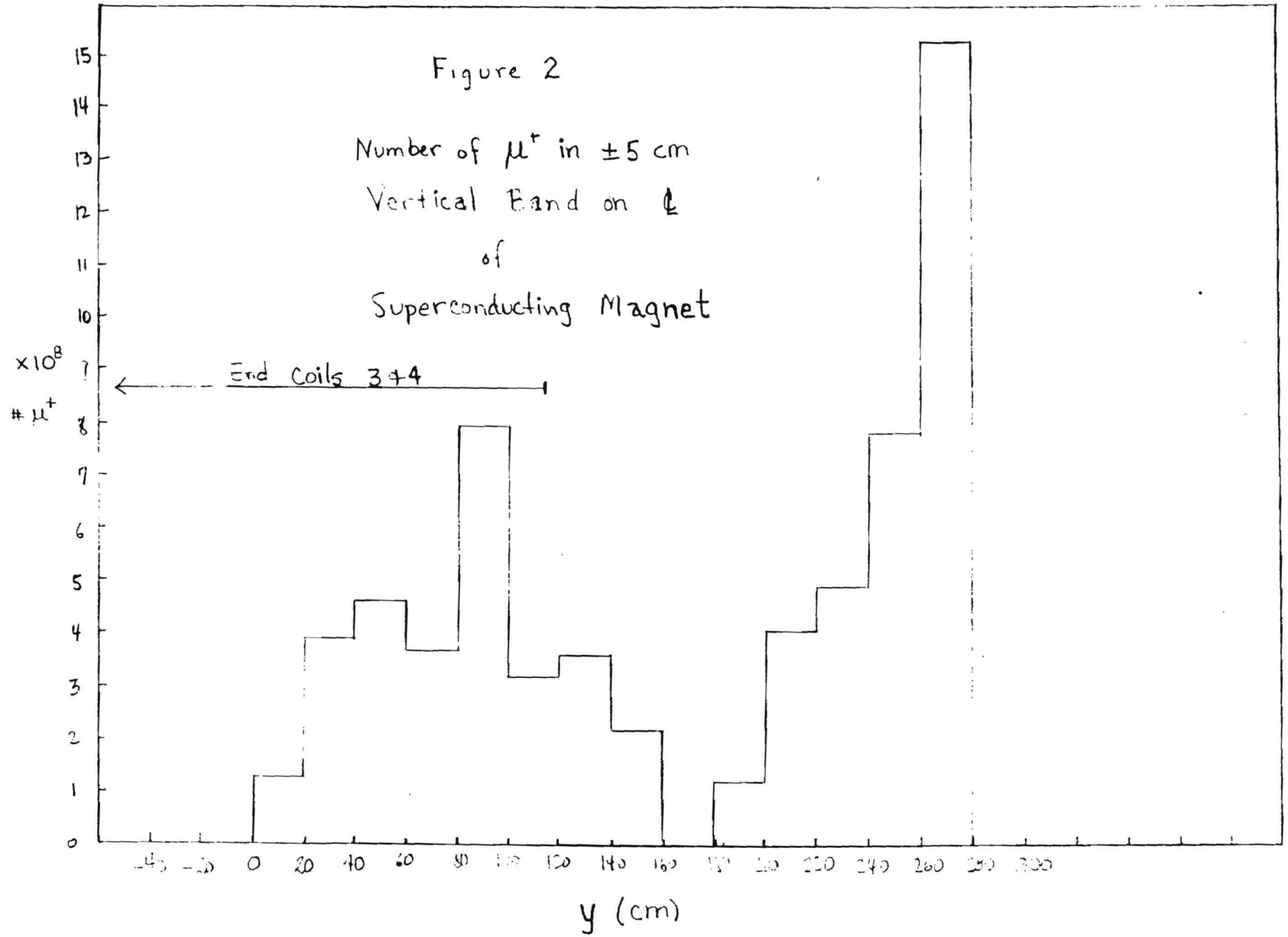
Figure 2
Number of μ^+ in ±5 cm
Vertical Band on ℄
of
Superconducting Magnet
End Coils 3+4
$\times 10^8$
$\# \mu^+$
y (cm)

APPENDIX II

Motivation and Consequences of a 900 GeV Design for Prompt Neutrino*

Some number of people believe that the fixed target program at Fermilab will never operate at an energy higher than 900 GeV, or at least not at high intensity, because of extraction losses. Should this belief prove to be true, then a 900 GeV design for prompt is fully justified. There is not even any physics lost.

The present intention is to design the spoiler system downstream of the target for 900 GeV, i.e., to design a system for which the Monte Carlo program predicts only a few muons in each bubble chamber per 10^{13} protons incident on the target at 900 GeV. We will also run the Monte Carlo at 1000 GeV in order to predict how much worse the muons would be at that energy.

The beamline would also be designed for 900 GeV, but a capability of pushing it to 1000 GeV by the addition of more power and/or magnets will be preserved.

Should the machine ever extract 1000 GeV protons, then one has two choices. If the muon background at 900 GeV has been small, one can upgrade the beamline and try 1000 GeV. Alternately, one can extract 900 GeV protons to the dump on a "front porch" in the accelerator ramp, and then accelerate the remainder of the protons to 1000 GeV for the remaining users. This latter option may even be attractive to the accelerator operations, if the intensity at 1000 GeV is limited by extraction losses.

The flux of tau neutrinos may go down as much as a factor of two between 1000 GeV and 900 GeV, which may sound like a loss of physics. However, it can easily be argued that this potential loss is more than offset by the greater proton intensity and accelerator reliability available at 900 GeV.

*Excerpted from a memo from C. Thornton Murphy to Peter Koehler, June 14, 1984.

First-order Redesign of the Prompt Neutrino Spoiler System by Ray Tracing

The muon spoiler system was designed for1000 GeV incident protons with the aid of a Monte Carlo program. This program was necessary to keep track of wrong-sign muons produced in tridents, deep inelastic scattering, and the behaviour of low-energy muons entering back legs of magnets.

However, the first-order purpose of the spoiler magnets can be calculated by hand, nearly: the most energetic muons produced must see enough $\int B\, d\ell$ to miss the detectors. In the case of the 1-meter bubble chamber, this means that the intense cone of muons about 100 GeV below the primary proton energy must miss the steel of the yoke (fit into the grove cut into the steel). This same band of muons then passes through the cameras of the 15' chamber, well away from the liquid (the 15' chamber has no massive yoke which must be missed by the muons).

Seog Oh and Irwin Pless have have derived the formula for the transverse displacement, z, given to a muon of momentum P at a distance S from the target after traversing the various magnet fields (see the following pages) and have specialized the equation to the two specific spoiler designs: all conventional magnets and conventional followed by a superconducting magnet (M3SC). They then adopted a slightly arbitrary, but quite safe, criterion for how much $\int B\, d\ell$ could be eliminated in reducing the design energy from 1000 GeV to 900 GeV: the transverse displacement of a 900 GeV muon in the reduced design must be the <u>same</u> as that for a 1000 GeV muon in the Monte-Carlo tested design for 1000 GeV, at <u>both</u> detectors. Of course, there are no muons at the primary beam energy, but this criterion forces the lower energy muons to scale appropriately: if the muon spectrum scales linearly with primary energy, then the spacial distribution of the muons will remain approximately the same.

Using this criterion, they found that the appropriate redesign for 900 GeV was as follows. For the superconducting scheme, reduce the field of M3SC from 50 kG to 40.8 kG. For the all-conventional scheme, eliminate M6. In both cases, move the target back 1 meter to increase slightly the lever arm of the remaining magnets. The deflections for muons of primary beam energy at both bubble chambers are shown in Table I for the four cases (all-conventional, superconducting, 1000 GeV, 900 GeV).

Because of second-order effects, this solution can be taken only as a suggestion to be evaluated to all orders in the Monte Carlo program. The Monte Carlo work has begun, and so far the results look promising.

The ray trace formalism has been used to search for other cost savings. For instance, it was known that in the orginal design, the high-energy muon cone barely missed the 1-meter chamber yoke (a notch had to be cut for this cone), but missed the 15' bubble chamber by nearly a meter (see Table I, and note that the radius of the liquid is 1.83 m).

By moving the target back, reducing $\int B\, d\ell$ somewhat and reducing the angular deflection of the muon cone, the muons can be tailored to just barely miss both chambers. As a first stab at this reduction in scope, we asked, how far back must the target be moved to eliminate the conventional M5 magnet while maintaining the same 900 GeV deflection at the 1-m chamber? How much is the deflection reduced at the 15' chamber? The answers are also shown in Table I. The target must move back 9 meters, and the deflection at the 15' chamber is reduced from 2.58 m to 2.17 m, which is still 0.34 m from the liquid. (An analogous calculation for the superconducting case is not presented, since this simplification makes the superconducting magnet so low in field as to be non-competitive.)

Of course, moving the target back does sacrifice tau neutrino flux: 25% for the 1-m chamber and 10% for the 15' chamber, assuming a flat distribution. Furthermore, this design change alters the nature of the muon distributions far more than the linear scaling done to reduce the energy to 900 GeV. Therefore it is even more imperative to check and fine-tune this idea with the Monte Carlo program.

By taking first derivatives of the appropriate formulae in the following note, one can quickly evaluate other ideas for economies. For instance, it has been suggested that making M1 stronger than 20 kG would help a lot because of its long lever arm. Taking the derivative of Eq. A, one obtains $dz/dB_1 = 0.0084$ m/kG at the 1 m chamber and 0.022 m/kG at the 15' chamber. Thus a 5 kG increase would yield an extra deflection of only 4 cm at the 1 m chamber and 11 cm at the 15" chamber. (This calculation is for the conventional system M1-4, with s = 65 m.)

It has been suggested that if the gap between M2 and M3SC could be cut from 3 m to 1 m, then M3SC could be reduced, i.e., made cheaper. Differentiating Eq. F with z constant, one obtains $dB_3/dS_3 = 0.49$ kG/m. If S_3 were shortened by 2 m, then B_3 could be reduced by 1 kG. If one assumes that costs go like B^2, only about $200K would be saved.

Table I

Deflections of primary-beam-energy muons at the 1 m and 15' bubble chambers for various spoiler system designs

System Design	$P_{primary}$	S to 1-m BC	z at 1-m BC	z at 15' BC
Conventional, M1→M6	1000GeV	56 m	0.728 m	2.747 m
Conventional, M1→M5	900	57	0.743	2.579
Conventional, M1→M4	900	65	0.739	2.167
Superconducting, B3=50kG	1000	56	0.763	2.598
Superconducting, B3=40.8kG	900	57	0.763	2.534

APPENDIX III

Fermilab

Physics Advisory Committee Meeting

June 15 - 22, 1984

I. General Recommendations

Introduction

The construction of a cryogenic accelerator, its operation at 800 GeV, and the delivery of extracted beams for fixed target experiments are supreme achievements of modern technology. The Committee congratulates the Laboratory on its splendid work. We note that the major construction projects for the Tevatron and its associated facilities have stayed within the budget and are on schedule.

Over the past five years, in anticipation of the commissioning of these facilities, this Committee has recommended a comprehensive program of experiments which utilize innovative electronic and visual detectors. This program directly confronts important issues at the forefront of elementary particle physics and provides unique opportunities for the discovery of new phenomena. The Laboratory Director has enthusiastically accepted our recommendations, and with the help of his staff, has developed plans to bring these experiments into operation in an efficient and timely fashion. A large number of physicists from all parts of the United States and from more than twenty other countries have committed their time and resources to these projects.

It is in the context of these major commitments of construction funds, scientific personnel and resources that the Committee is compelled to express its dismay at the inadequate level of funding currently in prospect to equip and operate the experiments and beamlines. Adequate and properly phased funding for equipment and operation must accompany such a large construction project in order to realize the goals of the program.

The Committee has been asked to advise the Director on how the Laboratory should react to the current low level of funding and possible further cuts in the budget. After carefully evaluating the program, we cannot recommend that any part of the currently approved program be cancelled. We are deeply concerned about the chilling effects the current funding situation will have on physics opportunities we envision for the future. We therefore strongly urge the Laboratory to continue seeking adequate funds

to carry out this program, and to emphasize forcefully to the Department of Energy and HEPAP the value of the physics opportunities which are in jeopardy, and the disproportion between the magnitude of the Tevatron construction projects and the level of funding available to exploit the opportunities they offer.

Tevatron I

The Committee reiterates its very strong support for the physics opportunities of the Tevatron I program and the desire to realize those opportunities as soon as possible. It is pleased with the rapid progress on the Antiproton Source and the CDF detector. It recognizes that implementation of a test run in June-July, 1985 implies a very tight schedule for both the $\bar{p}$ source and CDF and that that goal may not be realized. However, it supports strongly the present schedule of a serious test run in the Spring of 1986, followed by a physics run of several months' duration in the Fall of 1986. The Committee urges the Laboratory to adhere to that schedule if at all practical.

The Committee reaffirms its earlier commitment to the existence of a high quality second detector to exploit fully the physics of Tevatron I. It feels that the conceptual design of the D0 detector addresses well the physics opportunities, emphasizing those complementary to CDF. It is desirable to bring D0 into operation at an early date. It seems unlikely, given the current budget, that this detector will be ready to produce physics before 1988. The Committee notes that the physics output of Tevatron I will continue to be rich through the mid-1990's and considers it important to have a second detector in place for as much of this period as possible. It endorses the D0 Technical Review, and notes that the full capabilities of D0 are not really known until a cryogenic and mechanical design of the calorimeter is available. The Committee urges the Laboratory to provide manpower to help in this effort. It also notes the importance of finalizing the design of the D0 Hall as soon as possible so that its construction may begin during the 1985 shutdown.

The funding profile suggested by the Laboratory should enable construction of the D0 detector on a time scale nearly matched to the technical limitations, but it has little contingency. The Committee realizes that if the cost were to increase dramatically without a corresponding budget increase, it could only be accommodated by a stretch-out, staged implementation, or change in scope. The Committee feels that there may be opportunities for an optimization of the detector design leading to a reduction in the number of channels or a staged implementation.

Tevatron II

The Committee has reviewed in detail the entire Tevatron II experimental program. It is a vigorous and well-balanced program in a unique energy range which studies programmatically lepton, photon and hadron interactions, conducts crucial tests of QCD and electro-weak theories, studies production and decay of heavy quark states, and searches for new phenomena in the higher energy range of Tevatron II. There is little overlap in the physics potential of individual experiments, and the Committee found that no major experiment could be eliminated without significant reduction in the physics yield of Tevatron II. Thus, the present Committee reaffirms the scientific approval given by previous PACs to all of the approved Tevatron II experiments.

As mentioned above, the DOE guidelines on capital equipment funding communicated to the Laboratory in March do not permit the timely utilization of Tevatron I and Tevatron II facilities. The Laboratory has submitted a plan (attached) that trims and stretches out the Tevatron II program (including the deferral of upgrades of the Proton-West and Meson-East beamlines). This scenario comes close to fitting within the guidelines, and, if there is no improvement in the budget, the Committee feels that this is a reasonable solution to an unfortunate problem.

In previous years the Committee assigned physics priorities within the Tevatron II program as follows: (1) Prompt Neutrino; (2) the Muon Beam and the Wide-Band Photon Beam; (3) the Meson-West Pion Beam; and (4) the Polarized Proton Beam. In reassessing this assignment of priorities the Committee has been unavoidably influenced by budget constraints and the cost to complete the Prompt Neutrino Beam and has separated that facility from the other major new beamlines. The Committee now ranks them in the following order: the Wide-Band Photon Beam, the Muon Beam, the Meson-West Pion Beam and the Polarized Proton Beam. The Committee regards the Prompt Neutrino program as comparable in physics priority with the best of the programs ranked above.

Scenarios and Relative Priorities

If the DOE is unable to supply even the inadequate capital equipment funds specified in its March guidelines, it will not be possible to realize the physics opportunities of Tevatron I and Tevatron II without a substantial delay in one or more of the programs. How the Laboratory should react to such a cut depends on its magnitude. If the shortage in FY 85 is at the level of $1-2M the Lab could delay the Polarized Proton Beam. In the event of a more drastic shortfall in FY 85, the Committee reluctantly concludes it may be necessary to delay or reduce in scope the Prompt Neutrino program. The Committee makes this recommendation

only because other attempts to save an equivalent amount of capital equipment funds would require substantial delay in the entire TeV I program or in at least three other TeV II experimental programs. The Committee feels that it is important that the TeV II programs in the existing beams and in the new Neutrino, Muon, Photon, and Meson-West Pion beams and the TeV I program, as realized by CDF, proceed on schedule. It thus reluctantly accepts some delay in the Polarized Proton or Beam Dump programs, if necessary, to allow this.

The Committee believes that the Beam Dump does offer unique physics opportunities, that it is important to make a start on D0, and that one cannot sacrifice opportunities for future fixed target experiments. Their relative priority in future years must depend on a reevaluation of the Beam Dump program, on the technical progress of D0, and on proposals received for new TeV II experiments. It encourages the Laboratory to hold a workshop on the opportunities for experiments using the Beam Dump.

Future Fixed Target Opportunities

Tevatron II, as the highest energy fixed target machine in existence, presents unique experimental opportunities in hadron, photon and lepton physics. The program in place exploits these opportunities with a combination of revised older experiments and new experiments and facilities. Results from the initial round of experiments as well as other concurrent measurements will certainly point the way to a new generation of TeV II experiments.

The diversity and flexibility inherent in fixed target work will continue to provide important windows into interesting and perhaps unforeseen phenomena. Given the long time scale in the design and construction of modern experiments, the Committee recommends that the Laboratory encourage initiatives by holding workshops to explore future fixed target experimentation. At the same time, it is important that long range planning of the Laboratory take into account the financial impact of the construction of possible major new fixed target faciliites.

APPENDIX IV

DEPARTMENT OF ENERGY
GENERAL SCIENCE AND RESEARCH - PLANT AND CAPITAL EQUIPMENT
FY 1987 BUDGET REQUEST
(TABULAR DOLLARS IN THOUSANDS. NARRATIVE MATERIAL IN WHOLE DOLLARS.)
CONSTRUCTION PROJECT DATA SHEETS

CHICAGO OPERATIONS
Field Office

HIGH ENERGY PHYSICS
FERMI NATIONAL ACCELERATOR

1. Title and location of project: Direct neutral lepton facility

Fermi National Accelerator Laboratory, Batavia, Illinois

2. Project No.

3. Date A-E work initiated: 1st Qtr. FY 1987

3a. Date physical construction starts: 2nd Qtr. FY 1987

4. Date construction ends: 3rd Qtr. FY 1988

5. Previous cost estimate:
Date: none

6. Current cost estimate: $14,700
Less amount for PE&D:
Net cost estimate: $14,700
Date: February 6, 1985

7. Financial Schedule:

Fiscal Year	Authorizations	Appropriations	Obligations	Costs
1987	14,700	14,700	14,700	9,700
1988	———	———	0	5,000

DEPARTMENT OF ENERGY
GENERAL SCIENCE AND RESEARCH - PLANT AND CAPITAL EQUIPMENT
FY 1987 BUDGET REQUEST
(TABULAR DOLLARS IN THOUSANDS. NARRATIVE MATERIAL IN WHOLE DOLLARS.)
CONSTRUCTION PROJECT DATA SHEETS

CHICAGO OPERATIONS
Field Office

HIGH ENERGY PHYSICS
FERMI NATIONAL ACCELERATOR

1. Title and location of project: Direct neutral lepton facility
Fermi National Accelerator Laboratory, Batavia, Illinois

8. Brief Physical Description of Project

This project provides for the procurement and construction of a facility which will produce an intense beam of neutral leptons, to be studied in four presently existing facilities. A neutral lepton is an uncharged, sub-atomic particle which interacts only via the "weak force", such as the well-established muon-neutrino and electron-neutrino. In this facility, the leptons will be produced "directly" by the interaction of an intense beam of protons in a copper or tungsten target, instead of by the decays of relatively long-lived meson particles. The dominant feature of this facility will be a set of five iron electromagnets which are necessary to bend away from the detectors the large background of charged leptons (known as muons) which are also produced "directly" in the target. These magnets gradually increase in size and have a total weight of 6500 tons. In addition to the magnets themselves, the project will include: (a) underground enclosures (2200 sq. ft.) to house and service the magnets, including caisons to bedrock to support the magnets properly; (b) service building (1100 sq. ft.), power supplies, and power substation for the magnets; (c) underground target hall (2300 sq. ft.) and its contents, which are the target and steel shielding necessary for radiation safety; (d) pre-target tunnel (3200 sq. ft.) and magnets (e) miscellaneous improvements and alterations to the primary proton beam leading into the pre-target area.

SCHEDULE 44

DEPARTMENT OF ENERGY
GENERAL SCIENCE AND RESEARCH - PLANT AND CAPITAL EQUIPMENT
FY1987 BUDGET REQUEST
(TABULAR DOLLARS IN THOUSANDS. NARRATIVE MATERIAL IN WHOLE DOLLARS.)
CONSTRUCTION PROJECT DATA SHEETS

CHICAGO OPERATIONS
Field Office

HIGH ENERGY PHYSICS
FERMI NATIONAL ACCELERATOR

1. Title and location of project: Direct neutral lepton facility
Fermi National Accelerator Laboratory, Batavia, Illinois

9. Purpose, Justification of Need for, and Scope of Project

The purpose of this project is to provide the facility needed for several already-existing detectors to take advantage of a uniquely high-energy capability of the Tevatron. Recent advances in the standard model have predicted that at Tevatron energies, it should be possible to produce enough tau-neutrinos to be able to observe them interacting in bubble chambers equipped with holographic optics. The tau-neutrino is postulated to exist, but has not yet been observed. It appears to be impossible to detect this new particle in existing neutrino beams, despite the high energy now available, because the number produced is negligibly small compared to the number of ordinary neutrinos. What is needed is a facility which enhances the ratio of tau-neutrinos to ordinary neutrinos and increases the absolute number of tau-neutrinos entering the detector. The ratio is enhanced by absorbing the source of ordinary neutrinos (long-lived mesons) immediately in a long, dense target. The absolute number of tau-neutrinos entering the detectors is increased by putting the target close to the detectors, because the neutrinos move in a diverging cone away from the target. In the existing neutrino beams, this cone is much bigger than the detectors.

There may well be additional neutrinos associated with extra generations of leptons not anticipated in the conventional standard model. In addition, recent developments in particle theory suggest the possibility of other neutral, heavier leptons. In particular, supersymmetric theories suggest the possible existence of light, neutral partners of known particles (such as "photinos"). Other theoretical schemes predict classes of light, spinless bosons, such as axions. The probability of discovering these particles is also immensely enhanced in this facility.

Because the detectors must be close to the target, it is not possible to get rid of the large muon background in the usual way, which is to slow them down until they stop in a long iron/earth shield. Instead they must be magnetically bent away from the detectors. The criterion which determined how much bending was necessary, which sets the scope of this project, was the width of the existing detectors and the desired distance from the target to achieve a detectable event rate.

DEPARTMENT OF ENERGY
GENERAL SCIENCE AND RESEARCH - PLANT AND CAPITAL EQUIPMENT
FY 1987 BUDGET REQUEST
(TABULAR DOLLARS IN THOUSANDS. NARRATIVE MATERIAL IN WHOLE DOLLARS.)
CONSTRUCTION PROJECT DATA SHEETS

CHICAGO OPERATIONS
Field Office

HIGH ENERGY PHYSICS
FERMI NATIONAL ACCELERATOR

1. Title and location of project: Direct neutral lepton facility
Fermi National Accelerator Laboratory, Batavia, Illinois

9. Purpose, Justification of Need for, and Scope of Project (cont.)

The timing of this project is set by the fact that the scheduled runs of the existing neutrino beams will be completed in 1987. Operating this facility is not compatible with the scheduled runs of the existing neutrino beams. The detectors to be used with this facility will be operating in the already scheduled runs, and therefore will still be active and maintained.

The effect on the program if the project is not authorized is that a golden opportunity will be missed to discover new particles which is possible now only at Fermilab. Deferring the project would create a gap in the Fermilab neutrino program, following which it would be difficult to reactivate the detectors and reassemble the scientific manpower necessary to perform the experiments.

SCHEDULE 44

DEPARTMENT OF ENERGY
GENERAL SCIENCE AND RESEARCH - PLANT AND CAPITAL EQUIPMENT
FY 1987 BUDGET REQUEST
(TABULAR DOLLARS IN THOUSANDS. NARRATIVE MATERIAL IN WHOLE DOLLARS.)
CONSTRUCTION PROJECT DATA SHEETS

CHICAGO OPERATIONS
Field Office

HIGH ENERGY PHYSICS
FERMI NATIONAL ACCELERATOR

1. Title and location of project: Direct neutral lepton facility
Fermi National Accelerator Laboratory, Batavia, Illinois

10. Details of Cost Estimate [a]	Item Cost	Total Cost
a. Engineering, design, and inspection at 15% of construction sub-items 1 and 2, and 3% of construction sub-items 3 and 4		$ 700
b. Construction costs		11,100 [b]
1) Improvements to land, including landscaping, drainage diversion, parking, and fencing	300	
2) Foundation supports and buildings	2,700	
3) Utilities, including two substations, cooling water system, target hall crane, rail system	700	
4) Special facilities including muon sweeping magnets, target station and handling, steel target shielding, pre-target magnets, miscellaneous beamline improvements, and installation of all of the above	7,400 [c]	
Subtotal		11,800
c. Contingency at 25% of above cost		2,900
Total estimated costs		14,700

[a] The above estimates are based on conceptual design and feasibility studies which are 80% complete.

[b] All costs have been escalated at the rate of 19.1%, which is the factor recommended by DOE (August, 1984) to scale 1984 estimates to 1987 costs.

[c] Not including $144K, representing depreciated value of used magnets, which is a non-fund cost to the project.

DEPARTMENT OF ENERGY
GENERAL SCIENCE AND RESEARCH - PLANT AND CAPITAL EQUIPMENT
FY 1987 BUDGET REQUEST
(TABULAR DOLLARS IN THOUSANDS. NARRATIVE MATERIAL IN WHOLE DOLLARS.)
CONSTRUCTION PROJECT DATA SHEETS

CHICAGO OPERATIONS
Field Office

HIGH ENERGY PHYSICS
FERMI NATIONAL ACCELERATOR

1. Title and location of project: Direct neutral lepton facility
Fermi National Accelerator Laboratory, Batavia, Illinois

11. Method of Performance

Design of the conventional and special facilities will be done by the operating contractor. Construction and procurement will be accomplished by fixed-price subcontracts awarded on the basis of competitive bidding. Installation will be accomplished by fixed-price subcontracts to the extent feasible.

12. Funding Schedule of Project Funding and other Related Funding Requirements

	Prior Years	FY 1987	FY 1988	Total
A. Total project costs				
1. Total facility costs				
a) Construction line item	0	9,700	5,000	14,700
2. Other project costs				
a) Conceptual design costs	50	0	0	50
Total project costs	50	9,700	5,000	14,750

B. Other related annual costs (in FY 1987 dollars) (estimate life of project: 10 years)

1. Facility Operating Cost (mostly power)	$ 1,100
2. Programmatic operating expenses directly related to the facility	800
3. Capital equipment not related to construction but related to the programmatic effort in the facility	200
Total related annual costs	$ 2,100

DEPARTMENT OF ENERGY
GENERAL SCIENCE AND RESEARCH - PLANT AND CAPITAL EQUIPMENT
FY 1987 BUDGET REQUEST
(TABULAR DOLLARS IN THOUSANDS. NARRATIVE MATERIAL IN WHOLE DOLLARS.)
CONSTRUCTION PROJECT DATA SHEETS

CHICAGO OPERATIONS
Field Office

HIGH ENERGY PHYSICS
FERMI NATIONAL ACCELERATOR

1. Title and location of project: Direct neutral lepton facility
Fermi National Accelerator Laboratory, Batavia, Illinois

13. Narrative Explanation of Total Project Funding and Total Related Funding Requirements

A. Total project funding
2. Other project costs.
a) Conceptual design costs. $50K was spent on conceptual design.

B. Total related funding requirements. It is estimated that the facility will be used for 10 years.
1. Facility operating costs. The major elements comprising the annual operating costs are power and operating personnel. The estimated power costs for a 25 week operating period per year are 5.4 Mw for the facility with a 55% duty factor. The estimated personnel are one operator for 25 weeks per year.
2. Programmatic operating expenses related to the facility include: operation of neutrino detectors for experiments.
3. A funding level is included for general annual improvements to the beamline, the facility itself, or to the experiments.
4. Future construction for maintenance, repair, or general plant improvement are not applicable to this facility.

DEPARTMENT OF ENERGY
GENERAL SCIENCE AND RESEARCH - PLANT AND CAPITAL EQUIPMENT
FY 1987 BUDGET REQUEST
(TABULAR DOLLARS IN THOUSANDS. NARRATIVE MATERIAL IN WHOLE DOLLARS.)
CONSTRUCTION PROJECT DATA SHEETS

CHICAGO OPERATIONS
Field Office

HIGH ENERGY PHYSICS
FERMI NATIONAL ACCELERATOR

1. Title and location of project: Direct neutral lepton facility
Fermi National Accelerator Laboratory, Batavia, Illinois

14. Incorporation of Fallout Shelters in Future Federal Buildings

Efforts will be made to slant the design of any suitable buildings to incorporate shelters at no additional cost to the project.

15. Incorporation of Measures for the Prevention, Control, and Abatement of Air and Water Pollution At Federal Facilities

The total estimated cost of this project includes the cost of those measures necessary to assure the facility will comply with Executive Order 12088. Sanitary waste will be discharged into existing sewers.

16. Evaluation of Flood Hazards

This project will be located in an area not subject to flooding as determined in accordance with the requirements of Executive Order 11988.

17. Environmental Impact

This project is in compliance with the National Environmental Policy Act.

18. Accessibility for the Handicapped

This project provides accessibility for the handicapped, where appropriate, in accordance with the Architectural Barriers Act (Public Law 90-480) and the Federal Property Management Regulations (41 CFR 101-19.6).

APPENDIX V

10/19/84

To: Leon Lederman

From: James Bjorken and Thornton Murphy bj tm

Subject: Summary of Conclusions from the Direct Neutral Lepton Facility Workshop

The Workshop was very well attended, with about sixty attendees from universities. In addition, about fifteen Fermilab scientists attended much of the Workshop. The response to the scheduled talks was lively, and the open forums produced animated discussions of the problems remaining with this facility.

We summarize here the most important conclusions of the Workshop. These conclusions are the consensus of a group of about fifteen involved experimenters who met the day after the Workshop in order to summarize the proceedings.

1. The estimated rates for ν_τ production have held up since proposal submission three or four years ago; however, there are still some questions of A-dependence. With an $A^{2/3}$ law for production (presented by Morfin) and an assumed F/D ratio ~10%, the yield of ν_τ per 10^{18} incident protons is ~100; with A^1 (as argued by Baltay) the number is $\gtrsim 500$. The evidence, such as it is, seems to us to favor A^1. However, more information on F/D is vitally needed.

2. Workshop presentations by Jon Rosner and Sally Dawson demonstrated that the interest from the theoretical physics community in the discoveries possible in this facility have, if anything, increased in the last two years. In particular, there are many tests of supersymmetry models which can be done only at this facility, and not at LEP, SLC, or $Sp\bar{p}S$.

3. The holographic bubble chambers, which are the most important devices approved to use this facility have met important milestones. The proponents express optimism that they will achieve the spatial resolution necessary to detect a significant fraction of the taus produced by the tau-neutrinos. The Spring run of course will provide the hard evidence that is needed.

4. The facility design of October 1982 (Fermilab TM-1155) has withstood further scrutiny and engineering followup and remains essentially sound. A Fermilab decision to reduce the design energy from 1000 GeV to 900 GeV has saved $2.5M in the cost estimate for this facility.

5. There is great disappointment and concern about the delay in the completion of this facility. The test run for the facility is scheduled for December 1987. Will the experimental groups hold together and be able to regroup for these experiments despite intervening commitments? Will the schedule slip more? Will Fermilab provide the necessary design manpower for the project, even with this stretched-out schedule?

6. The number of Ph.D. scientists who remain committed to do the experiments in 1988 is over 70. These scientists come from 17 institutions, including of course, a sizeable international component (Japan, Israel, and China) which has invested heavily in the program. The program is comprised of three independent experiments; in addition, Walker et al retain a strong interest in using an augmented Lab C detector in the program as well.

There will also be a Fermilab Report summary of this Workshop. Transparencies of individual presentations are available upon request.

APPENDIX VI

Appendix VI

Radioactive Target Handling Scheme

The removal of a radioactive target from the target shield will be carried out as follows. This area is shown in Figures 6 and 7.

The 8" beam pipe will be decoupled from the beamline just upstream of the re-entrant shield plug and removed from the shield. This section will be removed manually. The radiation level here is expected to be no more than 10 mRem/hr. The 12" thick sliding shield doors (Sec CC) will be closed (remotely) to cover the entrance of the target cavity and shield personnel from the radioactive target. The utility lines connecting the target and instrumentation to the outside sub-systems will be disconnected manually at the lower upstream face of the re-entrant shield. An existing railroad locomotive will be connected to the re-entrant plug and will remove it to the outside railroad siding where the plug will be stored temporarily (see Figure 7).

The 5 ton auxiliary transfer shield will be brought in on a transporter and set up on posts at the front face of the target shield. The retrieval of the target bedplate and attendant target is now possible.

The sliding shield doors are opened and the same transporter that handled the auxiliary transfer shield is ready for placement under the target bedplate. Once the transporter is under the target bedplate, the bedplate is raised hydraulically using jacks mounted on the transporter and can be

withdrawn and placed inside the auxiliary transfer shield (Section DD, Figure 6). The auxiliary transfer shield is now lowered hydraulically, to seal the target/bedplate/transporter combination. The guillotine door at the downstream end of the auxillary shield is closed and the entire system can now be removed from the Prompt target area on a railroad track system. Presently, it is envisioned that this auxiliary shield and target cargo will be loaded onto a suitable lowboy-truck trailer and taken to an existing Target Service Building Area for service storage or disposal. To install a new target in the Prompt beam would be the reverse of the procedure just described.

Handling of the coils in the first spoiler magnet is also of concern, especially if they fail well into a run when projected residual radioactivity could be in the tens of rem/hr. The scheme for removing and replacing a coil would adhere to the following handling concepts.

The magnet is built in such a way to allow the outside iron and attendant coil on either side of the magnet to roll away from the beamline. This allows direct crane access to the coil. The utilities are disconnected manually at the downstream end of the magnet. Employing automatic lifting/releasing fixtures on the crane, it is possible to remove a coil without personnel being in the immediate vicinity of the radioactive coil. The crane will place the coil on a special prepositioned transporter on the railroad track system. From there it will be removed from the target area (lowboy truck) and taken to the Target Service Building Area for repair or disposal. A fresh coil can be installed by reversing the handling techniques.

APPENDIX VII

Appendix VII

Direct Neutral Lepton Facility

Cost Analysis

TABLE OF CONTENTS

	Page
Basis of the Cost Estimate	3
Cost Summary (Level 1)	5
Category Cost Summary (Level 2)	6
1.1 Construction	6
1.2 Utilities	6
1.3 Special Equipment	7
Cost Breakdown (Level 3)	8
1.1 Construction	8
1.1.1 NPA Tunnel	8
1.1.2 NPA-Target Hall	8
1.1.3 Shield Enclosure with Service Annex	9
1.1.4 Foundation Support for Magnet M1	9
1.1.5 Foundation Support for Magnet M2	9
1.1.6 Foundation Support for Magnet M3-4-5	10
1.1.7 Beam Pipes and Berm from NE8 to NPA	10
1.2 Utilities	11
1.2.1 Power Distribution	11
1.2.2 Utilities-Services	11
1.3 Special Equipment	12
1.3.1 1 and M2 Magnets	12
1.3.2 M3, M4, and M5 Magnets	12
1.3.3 Target Pile	13
1.3.4 Pretarget Magnets and Services	13
1.3.5 Beamline Instrumentation and Controls	13

Basis of the Cost Estimate

This cost estimate is based on a conceptual design which is 80% complete. Very little detailed engineering design has been done for the facility. For that reasons, a rather large contingency (25%) has been allowed.

This document presents the cost summary at three levels of detail. A fourth (even more detailed) level exists for most of the project, but was too bulky to include. The 25% contingency is added at level 1. These cost estimates were made during the spring and summer of 1984; therefore an escalation factor of 1.19 has been used to account for inflation between 1984 and 1987. This number was given in a DOE memorandum dated August, 1984. This escalation factor is applied at level 2 of this cost summary. EDIA costs are also added at level 2.

Although very little detailed engineering design has been done, nearly all aspects of the conceptual design have been taken to appropriate engineers for engineering evaluation and cost estimating. Costs were then estimated by the use of unit cost tables (UCL's) assembled from recent Fermilab experience. For instance, the tunnel and target hall civil construction costs were estimated from UCL's developed by the Fermilab Tevatron Construction Section based on recent bids for similar underground tunnels and halls. However, the foundation supports for the magnets were based on an actual engineering design and Means Cost Data books. The magnet costs were made on a per pound basis from 1984 experience from bids for magnets about half as large as these. Beamline magnet, power supplies, substations, instrumentation, and vacuum system costs were based on actual 1984 purchase prices. The target pile costs

were based on an actual engineering design. The electrical installation, the cooled water system, and the controls modules and cabling estimates were scaled very approximately from recent installations of similar scope.

Cost Summary (Level 1)

Item No.	Category	Cost
1 Thru 6	Construction	$3,441,552
1 and 2	Utilities	$686,969
1 Thru 4	Special Equipment	$7,646,208
		$11,774,729
11		
	25% Contingency	2,943,682
		$14,718,411

Category Cost Summary (Level 2)

1.1 Construction		Cost
1.1.1	NPA Pretarget Tunnel	$592,127
1.1.2	NPA Target Hall	285,781
1.1.3	Shield Enclosure with Service Annex	331,917
1.1.4	Foundation Support for Magnet M1	207,946
1.1.5	Foundation Support for Magnet M2	232,130
1.1.6	Foundation Support for Magnets M3-4-5	456,893
1.1.7	Beam pipes and berm from NE8 to NPA	136,710
	Subtotal	$2,243,504
	12% Profit	269,220
	Subtotal	$2,512,724
	19.1% Escalation	479,930
	Subtotal	$2,992,654
	15% EDIA	448,898
	Total	$3,441,552

1.2 Utilities		Cost
1.2.1	Power Distribution	$260,000
1.2.2	Utilities-Services	300,000
	Subtotal	$560,000
	19.1% Escalation	106,960
	Subtotal	$666,960
	EDIA @ 3% of Procurement	20,009
		$686,969

1.3 Special Equipment		Cost
1.3.1	M1 and M2 Magnets	$953,000
1.3.2	M3, M4, and M5 Magnets	4,224,000
1.3.3	Target Pile	480,000
1.3.4	Pretarget Magnets and Services	440,800
1.3.5	Beamline Instrumentation and Controls	135,200
	Subtotal	$6,233,000
	19.1% Escalation	1,190,503
	Subtotal	$7,423,503
	EDIA @ 3% of Procurement	222,705
	Total	$7,646,208

Cost Breakdown (Level 3)

1.1 CONSTRUCTION

1.1.1 NPA Pretarget Tunnel

No.	Descriptive Title	Details	Cost
1-A	Tunnel	11'W x 8'H x 290'L	$341,330
1-B	Personnel Access Labyrinth	55'L	40,050
1-C	Additional Berm	4440 Cy.	29,200
1-D	Rail System Tunnel and Dock	75'L	137,905
1-E	Target Area Rail Handling System		23,431
1-F	Target Area Shield Plug		9,711
1-G	AC & DC Power Ducts	70'L	10,500
		Subtotal	$592,127

1.1.2 NPA Target Hall

No.	Descriptive Title	Details	Cost
2-A	Enclosure Section #1	23'W x 15'H x 40'L	$83,720
2-B	Enclosure Section #2	23'W x 18'H x 40'L	85,174
2-C	Enclosure Section #3	23'W x 29'H x 20'L	60,805
2-D	Retaining Wall	131'L max x 39.5'H x 1'Thk.	56,082
		Subtotal	$285,781

1.1.3 Shield Enclosure with Service Annex

No.	Descriptive Title	Details	Cost
3-A	Above Ground Portion	29'W x 76.5'L x 12'H	$99,833
3-B	Below Ground Portion	29'W x 76.5'L x 23.5'H	153,496
3-C	Service Annex	15'W x 76.5'L x 12'H	74,588
3-D	AC & DC Ducts		4,000
		Subtotal	$331,917

1.1.4 Foundation Support for Magnet M1

No.	Descriptive Title	Details	Cost
4-A	Caissons	24 @ 24"dia. x 67'L	$109,788
4-B	Steel WF Core	$22/V.L.F. x 67' x 24	35,376
4-C	Steel Casing	$24/V.L.F. x 67' x 24	38,592
4-D	Floor-Caisson Cap	40'L x 23'W x 4.5'D	24,190
		Subtotal	$207,946

1.1.5 Foundation Support for Magnet M2

No.	Descriptive Title	Details	Cost
5-A	Caissons	30 @ 24"dia. x 60'L	$137,235
5-B	Steel WF Core	$22/V.L.F. x 60' x 30	39,600
5-C	Steel Casing	$24/V.L.F. x 60' x 30	43,200
5-D	Floor-Caisson Cap	20'L x 23'W x 4.5'D	12,095
		Subtotal	$232,130

1.1.6 Foundation Support for Magnets M3-4-5

No.	Descriptive Title	Details	Cost
6-A	Caissons	60 @ 24"dia. x 50'L	$274,470
6-B	Steel WF Core	$22/V.L.F. x 50' x 60	66,000
6-C	Steel Casing	$24/V.L.F. x 50' x 60	72,000
6-D	Floor-Caisson Cap	75'L x 26.5'W x 4.5'D	42,178
6-E	Mobilization		895
6-F	Demobilization		1,350
		Subtotal	$456,893

1.1.7 Beam Pipes and Berm from NE8 to NPA

No.	Descriptive Title	Details	Cost
7-A	Upstream 14" Pipe and Pump Tee	275'	$47,199
7-B	3 Downstream 6" Pipes	496'	89,511
		Subtotal	$136,710

1.2 UTILITIES

1.2.1 Power Distribution

No.	Descriptive Title	Details	Cost
1-A	Concrete Pad	2 @ 20' x 20'	$9,000
1-B	Substations	2 @ 1500KVA 480V	180,000
1-C	2000 Amp Feed	2 @ 20 Ft.	6,000
1-D	Switchboard	2 @ 2000A	16,000
1-E	Secondary Distribution		29,000
1-F	Electrical Hardware		20,000
		Subtotal	$260,000

1.2.2 Utilities-Services

No.	Descriptive Title	Details	Cost
2-A	DC Electrical System NPA Tunnel & Tgt. Hall	Hardware, Cables, and Installation	$ 62,400
	Shield Enclosure	Hardware, Cables, and Installation	72,500
2-B	LCW System NPA Tunnel & Tgt.Hall	Pipe, Hose, Valves and Installation	32,900
2-C	Beamline Vacuum System	Hardware and Installation	89,600
2-D	Crane (Target Hall)	5 Ton	42,600
		Subtotal	$300,000

1.3 SPECIAL EQUIPMENT

1.3.1 M1 and M2 Magnets

No.	Descriptive Title	Details	Cost
1-A	Coils		$139,000
1-B	Steel	1180 Tons @ $500/Ton	590,000
1-C	Lead	87 Tons @ $150/Ton	13,000
1-D	Power Supplies and Installation		34,000
1-E	Closed Loop Cooling Water System		25,000
1-F	Rigging	1280 Tons @ $50/Ton	64,000
1-G	Supplemental Costs to Widen M2 by 16%		88,000
		Subtotal	$953,000

1.3.2 M3, M4, and M5 Magnets

No.	Descriptive Titles	Details	Cost
2-A	Coils	87.7 tons	$958,000
2-B	Steel	4766 tons	2,383,000
2-C	Heavy Concrete Inserts	101 tons	20,000
2-D	Power Supplies and Installation		378,000
2-E	Cooling Water System		37,000
2-F	Roller System		191,000
2-G	Rigging		257,000
		Subtotal	$4,224,000

1.3.3 Target Pile

No.	Descriptive Titles	Details	Cost
3-A	Shielding		$270,513
3-B	Target		67,800
3-C	Re-entrant Shield Plug		22,875
3-D	Target Transfer Shield and Transporter		67,812
3-E	Rigging		51,000
		Subtotal	$480,000

1.3.4 Pretarget Magnets and Power Supplies (see Tables 2 and 3)

No.	Descriptive Titles	Details	Old Cost*	New Cost
4-A	6-3-120 Dipole	1 @ $37,300		$37,300
4-B	B-1 Dipole	4 @ $53,900		215,600
4-C	B-2 Dipoles(4 in NPA,3 in NE8)	7 @ $53,900	377,300	
4-D	3Q84	6 @ $22,600	45,200	90,400
4-E	500-5 Power Supply	6 @ $50,000	250,000	50,000
4-F	55-.1 Power Supply	1 @ $20,000		20,000
4-G	240-1.2 Power Supply	1 @ $35,000	35,000	
4-H	Magnet Stands	17 @ $1,568	12,544	14,100
4-I	Rigging: NPA	17 @ $526		8,900
	NE8	15 @ $300		4,500
		Subtotal		$440,800

*Shown here as 1984 purchase prices. Depreciated values are probably 20% of prices shown.

1.3.5 Beamline Instrumentation and Controls

No.	Descriptive Titles	Details	Cost
5-A	Instrumentation	Table 5	$48,900
5-B	Control Modules, Cables		86,300
		Subtotal	$135,200