APPENDIX II. MAGNET LATTICE AND DYNAMICS

L. C. Teng

A. Ring Geometry and Magnet Lattice

The Energy Doubler will be placed directly underneath the Main Accelerator, with the Doubler orbit 16 in. below and parallel to the Main-Accelerator orbit. The possibility of a future addition of a superconducting ring in this location was anticipated during the design of the Main Accelerator and care was taken to leave this space relatively free of obstructions. Except for some minor modification of the support stands of the Main-Ring magnets, there will be no interference between the installation of the Doubler ring and the Main Accelerator.

This choice of location for the Doubler has two important advantages. First, the orbit geometry and the magnet lattice of the Doubler ring will be identical to those of the Main Ring. Thus the focusing and accelerating properties of the Doubler beam will be the same as those of the Main-Ring beam. This means that the experience gained in aligning, tuning, and operating the Main Ring can be applied directly and in detail to the Doubler. Second, the small separation of 16 in. between the Main Ring and the Energy Doubler implies that one can bring the two orbits together for colliding beams with minimum effort. Colliding-beam operation, which will be discussed in more detail below, is clearly a natural and extremely useful mode of operation whenever there are two rings (and hence two beams) existing in the same tunnel. In addition, the proximity of the Doubler orbit to the Main-Ring orbit makes it easy to transport the beam extracted from the Doubler to the present Main-Ring extracted-beam line and hence to the present experimental areas and facilities.

As will be discussed later, no deviation from the Main-Ring lattice is necessary for injection, acceleration, or extraction of beam in the Doubler. Some unessential but desirable minor modifications of the magnet lattice are made to take advantage of the higher injection energy (100 GeV) into the Doubler. Higher injection energy means smaller required aperture, hence higher attainable quadrupole field gradient relative to the dipole field. The design quadrupole gradient

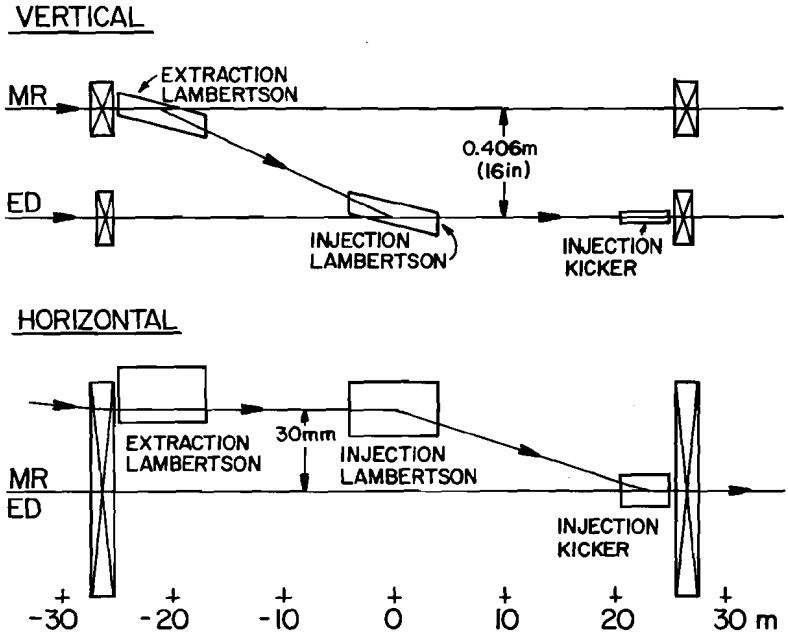

Fig. II-1. Schematic of the injection system.

at 1000 GeV is 24.1 kG/in. compared with the equivalent 15.3 kG/in. of the Main Ring. Operating at this gradient and at the same betatron oscillation tune of $\nu = 19.4$ as the Main Ring, the gradient length of normal-cell quadrupoles need only be 53 in. compared with 84 in. for the Main Ring. Furthermore, experience in the Main Ring indicates that the length of the mini-straight section can be reduced. The length gained in these ways is to be added to the dipole, so that one can reach higher energy with the same peak dipole field strength, or conversely, the same energy at lower dipole field. The effective length of a Doubler dipole is 252 in., 13 in. longer that a Main-Ring dipole. For 1000 GeV, one therefore needs a field strength of only 42.3 kG. The Doubler will contain a total of 774 dipoles, as does the Main Accelerator.

It might be possible to increase the quadrupole gradient further. This would further reduce the necessary gradient length of the quadrupoles, which could be added to the mini-straight section, which has been reduced from 83 in. in the Main Ring to 62 in. in the Doubler.

The long straight sections in the Main Ring are matched for a betatron tune of 20.25. At a tune of 19.4, these long straight sections are slightly mismatched. In the Doubler, matching across the long straight section is restored for a tune of 19.4 by minor readjustment of the matching quadrupoles. The total number required is 192 normal-cell quadrupoles and 48 long straight-section matching quadrupoles, as in the Main Accelerator.

B. Beam-Transfer System

The beam in the Main Ring will be transferred at 100 GeV to the Energy Doubler in one revolution. The beam-transfer system is located in the 50.8-m long straight section B (LB). It may be noted that some small amount of beam loss is unavoidable during transfer. This stray beam hitting a superconducting magnet might cause it to quench and hence only conventional magnet elements will be used in the beam-transfer system.

Extraction from the Main Ring will be accomplished by fast-kicking the beam horizontally outward across a Lambertson iron-septum magnet (the extraction Lambertson) located at the upstream end of LB. This entire system is shown in Fig. II-1. The fast kicker is located in the mini-straight section at station A46. It has a length of 1.5 m, a peak field of 1 kG, and a rise time less than 0.2 μsec. This kicker will kick the 100 GeV beam by an angle of 0.44 mrad. The corresponding displacement at the extraction Lambertson septum is 3 cm, ample for clearing

the septum. The Lambertson is 8 m long, has a field of 9.16 kG, and bends the beam downwards by 22 mrad. The beam arrives at the Doubler level (16 in. below) at the midpoint of LB, where a second Lambertson magnet (the injection Lambertson) bends the beam back up 22 mrad to a horizontal orbit. At the injection Lambertson, the beam will be 3 cm horizontally outside the central orbit of the Energy Doubler. The injection Lambertson is tilted slightly so that in addition to the 22-mrad upward bend, it also deflects the beam horizontally inward by 1.32 mrad. This brings the beam inward to cross the Doubler orbit horizontally near the downstream end of LB, where a 4.5-m long fast kicker will kick the beam horizontally outward by 1.32 mrad. The beam will then travel along the Doubler orbit.

Since no quadrupole is added or bypassed in the transfer line, betatron matching should be perfect throughout the transfer. The horizontal dispersion is also properly matched. The vertical dog-leg introduces, however, a mismatch in the vertical dispersion equal to the vertical displacement, namely 16 in. or 0.41 m. But since the momentum spread in the beam at transfer is $\Delta p/p = 0.5\times10^{-3}$, this mismatch increases the beam height by only 0.2 mm, which is entirely negligible. With kicker rise and fall times shorter than 0.2 μsec and a Lambertson septum thickness less than 3 mm, the beam loss on the septum should be less than 0.1% and the transfer efficiency should be better than 99.9%.

Two special features of this beam-transfer scheme deserve mention. The Energy Doubler magnets are designed with a cold bore. Unless absolutely necessary, the cold bore should continue uninterrupted for as long as possible. Indeed, both the correction-magnet packages and the beam-position monitors that will occupy the mini-straight sections are designed to operate cold so that most, if not all, of the mini-straight sections will have a cold bore. It should be possible to continue the cold bore through a complete sextant of the ring. Only long straight sections will then have a warm bore with cold-warm transition sections at either end. It is therefore desirable to locate all injection, acceleration, and extraction elements in long straight sections. The scheme described is designed to satisfy this criterion.

The injection Lambertson located at the midpoint of LB serves equally well for injection of beam in the reverse direction. For colliding beam between the Main Ring and the Energy Doubler, one must be able to operate both accelerators in the reverse direction. This can be done by reversing the dipole fields and leaving the quadrupole fields unchanged. The focusing actions of all the quadrupoles

on the beam circulating in the opposite direction will then be reversed so that the focusing sequence on the beam will remain unchanged. An identical but reversed injection system, using the same injection Lambertson with field reversed, will transfer the beam from the Main Ring to the Energy Doubler in exactly the same manner but in the reversed direction. Of course, it is not really necessary to use the same Lambertson for injection in both directions. One can move the Lambertson downstream and install two such magnets with opposite fields, one on each side of the midpoint of LB. For injection in a given direction, only one of the magnets is to be used; the other one is turned off. Alternatively, one can transfer the reversed beam in a different long-straight section using an entirely independent system. For either arrangement, moving the injection Lambertson downstream will reduce the required bending strength of both the injection and the extraction Lambertson magnets.

C. Beam Dynamics and Aperture Considerations

1. Magnetic-field corrections. The Energy Doubler has a magnet lattice that is essentially identical to the Main Accelerator, and the beam-dynamical effects arising from constructional errors are therefore the same for the two accelerators and have, thus, already been determined (see Section 4.4 of NAL Design Report 1968). Furthermore, the tuning and operating experience gained from the Main Ring is applicable in detail to the Doubler. Finding and improving the closed orbit with a properly instrumented beam position-monitoring system is a well-understood problem. Given good magnetic-measurement data, a careful survey, and reliable means for beam steering, it is likely that a circulating beam can be obtained without unusual difficulty insofar as effects due to magnetic-length and placement errors are concerned.

Harmonic multipole errors excite resonances. Low-order resonancs cause excessive growth in beam size and must be avoided. But with reasonable care in the fabrication of magnets, the widths of these resonances caused by harmonic errors can be held down to tolerable values, and with proper regulation of the power supplies these resonances can be avoided. This is especially true with a superconducting magnet system, for which the response of the field to power-supply ripple is small and slow. It is therefore likely that no harmonic correction will be necessary.

The chromaticity, the variation of betatron tune with momentum, must be adjusted to ensure that the ring has a reasonably large momentum aperture. The

natural kinematic chromaticity of the ring is $\frac{\Delta\nu}{\Delta p/p} \simeq 22$. To first order, ignoring space-charge instability problems, this chromaticity can be reduced to zero. Landau damping of coherent space-charge instabilities introduces other requirements on chromaticity. An average sextupole field is provided by the trim-magnet packages located in the ministraight sections to adjust chromaticity to the desired value. Higher-order dependences of ν on $(\Delta p/p)^2$, $(\Delta p/p)^3$, etc., can be corrected by higher-order average multipoles, but in all likelihood these corrections will not be necessary. Dependence of tune on amplitude limits the betatron aperture of the ring. This dependence is compensated by average octupole fields produced also by the trim-magnet packages.

2. Aperture. The most severe aperture requirement is imposed by the operation of an efficient slow beam-extraction system. In a resonant-extraction scheme, the aperture has to be large enough in the extraction plane to permit an unstable betatron oscillation of sufficient amplitude to develop so that the amplitude-dependent step size becomes sufficiently large to jump across an extraction septum with high efficiency. The half-integer resonant extraction system currently in use on the main accelerator takes up about 2 in. of aperture for the unstable betatron oscillation to build up and another0.75 in. (step size 0.375 in.) to accommodate the stepped-over beam that enters the septum aperture at the proper phase of oscillation. At present, the extraction efficiency is close to 99% and is limited by the effective thickness of the electrostatic septum.

For a superconducting magnet ring with negligible field ripple it is more advantageous to employ a third-integer scheme. In such a scheme, the stable betatron amplitude is not enlarged near resonance as in the half-integer scheme, so that more of the available aperture can be used for the buildup of unstable betatron amplitude. Moreover, the step size is the accumulation of the amplitude growth in 3 turns instead of 2. Thus, one can obtain larger step size for the same available aperture or the same step size with a smaller total aperture. The slow-extraction system for the Doubler described below requires a horizontal good-field aperture of 2.25 in.

3. Space-charge effects. The incoherent space-charge tune shift for a beam intensity of 5×10^{13} proton/pulse is negligible at energies above 100 GeV.

Intensity-dependent collective effects in the Energy Doubler can be estimated by scaling from knowledge of the same effects in the Main Ring. We can expect longitudinal as well as transverse coherent instabilities to occur in the same

manner as they do in the Main Ring. Since both the tune spread and the momentum spread in the beam decrease roughly linearly as energy increases, the tolerable transverse and longitudinal coupling impedances of the beam enclosure for the Doubler will be about half those for the Main Ring. Conversely, for the same coupling impedances, the 1000-GeV beam in the Doubler can be expected to be twice as unstable as the 500 GeV Main-Ring beam.

Longitudinally, the tolerable impedance in the Main Ring is given by $Z/n \sim 10\Omega$, where n is the mode number. The major contribution to this coupling impedance comes from parasitic modes in the rf cavities. This instability was cured after these parasitic modes were properly damped and the inactive cavities were properly shorted on the flat-top. Similar precautions will be taken in the design of the Doubler rf cavities. In addition, a wide-band longitudinal feedback damper may be necessary for the full intensity of 5×10^{13} protons/pulse. Such a damper is being designed for the Main Ring.

On the other hand, since both the aperture and the rf of the Doubler can contain much larger momentum spread, it should be possible to increase the momentum spread intentionally as the beam is being accelerated. One can keep the momentum spread at 1000 GeV as large as or even larger than that at 500 GeV. The larger momentum spread, in addition to maintaining stability through Landau damping, will make slow extraction easier and smoother.

Transverse coherent instabilities in the Doubler must be cured in the same manner as those in the Main Ring by using a wide-band feedback damper. This technology is well-developed and straightforward. In addition to the damper, which will take care of the lower modes, the chromaticity of the machine must be adjusted by the trim sextupoles to positive values throughout the acceleration cycle to insure stability of the higher head-tail modes.

D. RF Accelerating System

It is expected that the ring magnet of the Energy Doubler will be capable of being operated at a wide range of ramp rates, depending on the requirements of the application. The highest ramp rate considered is 100 GeV/sec. The rf system is therefore designed to have the capability of accelerating 5×10^{13} protons at the rate of 100 GeV/sec. With a revolution period of 21 μsec, this corresponds to an energy gain of 2.1 MeV/turn and a power to the beam of 800 kW.

The position of the Doubler directly underneath the Main Ring is such that its circumference can be adjusted to be precisely equal to that of the Main Ring. This

will enable synchronous transfer of the beam from the Main Ring to the Doubler. After transfer to the Doubler, the beam bunches from the Main Ring are captured directly into accelerating rf buckets without debunching and rebunching. The process of debunching and rebunching would require a front porch in the Doubler magnet ramp and would always incur some beam loss.

1. Choice of frequency. For synchronous beam transfer, the rf harmonic number of the Doubler should be an integral multiple of 1113, corresponding to a frequency that is an integral multiple of 53.1 MHz. The choice of frequency depends on (1) consideration of beam dynamics, (2) consideration of physical dimensions of the cavities, and (3) availablility of power-amplifier tubes for supplying the rf power.

It is desirable to have the rf cavities small. In our case, the placement of the Doubler directly underneath the Main Ring restricts the diameter of the cavities to less than 0.8 m. For multi-gap cavities the gaps are generally spaced at intervals corresponding to multiples of 180° rf phase. Hence, higher accelerating voltages can be achieved per unit length of cavity at higher frequencies. These considerations favor the choice of a high frequency.

On the other hand, the shorter wave length at higher frequency means shorter rf buckets, and hence a restriction on the maximum beam-bunch length that can be contained. The beam in the Main Ring is most tightly bunched at the extraction energy when the magnetic field is constant (flat-topped) and the rf is full-on at some 3.5 MW. At 100 GeV, the measured longitudinal emittance of 0.1 eV-sec per beam bunch in the Main Ring gives under these conditions, a bunch length of 0.5 m and a momentum spread of 0.25 eV-sec/m. This bunch length is short for 53.1 MHz rf buckets, but is long compared with buckets at frequencies more than twice this value. At three times this frequency, to obtain rf buckets matched in shape to these beam bunches would already require a rather low synchronous phase angle and hence a rather high cavity voltage. As a compromise, we have chosen an rf frequency twice that of the Main Ring, or 106.2 MHz for the Energy Doubler. This corresponds to a harmonic number of 2226.

With this harmonic number and an acceleration rate of 100 GeV/sec or 2.1 MeV/turn, we can operate at a reasonably high synchronous phase angle of 50°. This gives a required cavity voltage of 2.75 MV/turn and a bucket area of 0.25 eV-sec, which is adequate to contain the beam-bunch longitudinal emittance of 0.1 eV-sec. To match the shape of the beam bunches to that of the buckets, so that there will be no dilution during transfer, the beam should be extracted from the Main Ring on

the flattop at 100 GeV with the Main Ring rf operating at the full voltage of 3.5 MV/turn. Only every other bucket in the Energy Doubler is filled by a beam bunch. At the frequency of 106.2 MHz, the cavity diameter can be made smaller than 0.8 m and several tetrodes are commercially available for use as the rf power amplifier.

Initially, when the Doubler is operating at an acceleration rate of 37.5 GeV/sec (100 GeV to 1000 GeV in 24 sec) or 0.786 MeV/turn, we have to lower the synchronous phase angle to 42° to obtain the same bucket area. This gives a required cavity voltage of 1.17 MV/turn. For bunch-shape matching under these conditions, the beam should be extracted from the Main Ring on the 100 GeV flattop with the rf operating at 1.75 MV/turn.

2. Cavity and power amplifier. Because of the very small frequency-modulation range needed, one can consider high-Q, high shunt-impedance cavities. Simple double-gap drift-tube cavities will have adquately high Q and shunt impedance. The cavity shown in Fig. II-2 has a Q of 22000 and a shunt impedance R_{sh} of 1.0 MΩ. The gaps are spaced at 140° instead of 180° of rf phase. This allows the addition of inductance coming from stems extending laterally outward from the midpoint of the cavity for power input and for tuning. This cavity can sustain a gap voltage of 0.5 MV or a total accelerating voltage of (2 sin 70°) × 0.5 MV = 0.94 MV per cavity. Three such cavities will be sufficient to produce the 2.74 MV needed. For the initial low acceleration rate of 37.5 GeV/sec the required voltage of 1.17 MV/turn can be supplied by two or perhaps even one cavity.

The most convenient location for the cavities is in long straight-section F where the Main-Ring rf cavities are housed (the RF Hall). A total length of 4 m is adequate for the three cavities. This space is now avilable near the downstream end of the straight section. In any case, ample space can be made available by removing some of the Main-Ring cavities, which will not be needed for acceleration to only 100 GeV.

In order to accelerate 5×10^{13} protons at a rate of 100 GeV/sec, the required rf-power input to the beam is 800 kW or 267 kW per cavity. To this one has to add the power consumed by the cavity, which is

$$\frac{1}{2}\frac{V^2}{R_{sh}} = \frac{(0.46\times10^6)^2}{2\times1.0\times10^6}\ \mathrm{W} \cong 106\ \mathrm{kW}, \qquad (1)$$

when operating at a gap voltage of 2.74/6 MV = 0.46 MV. Hence, the power amplifier must deliver 373 kW to the cavity. Each cavity will be powered by four 4CW50,000 tetrodes, each of which is capable of supplying 100 kW power at 106 MHz. A tube of

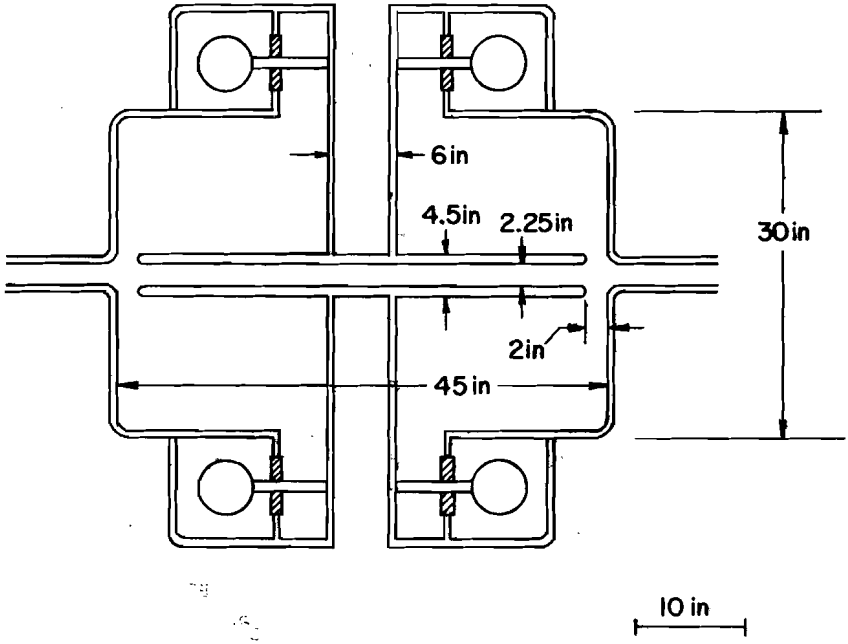

Fig. II-2. Double-gap rf cavity.

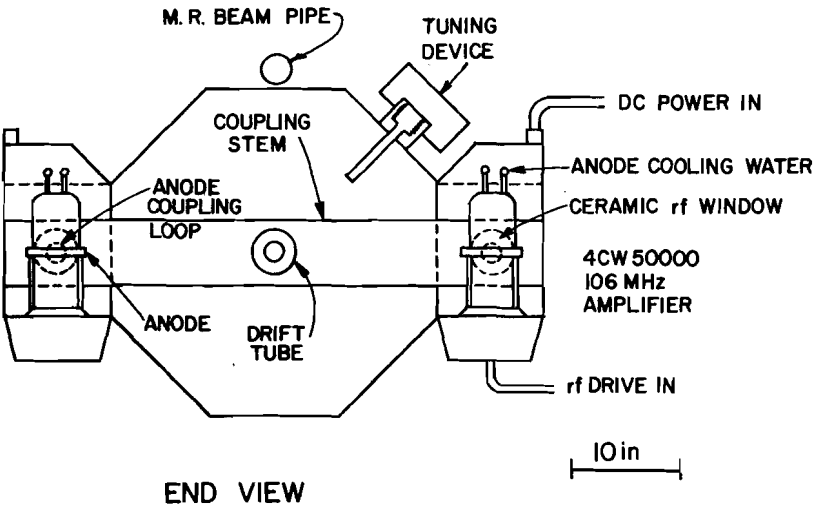

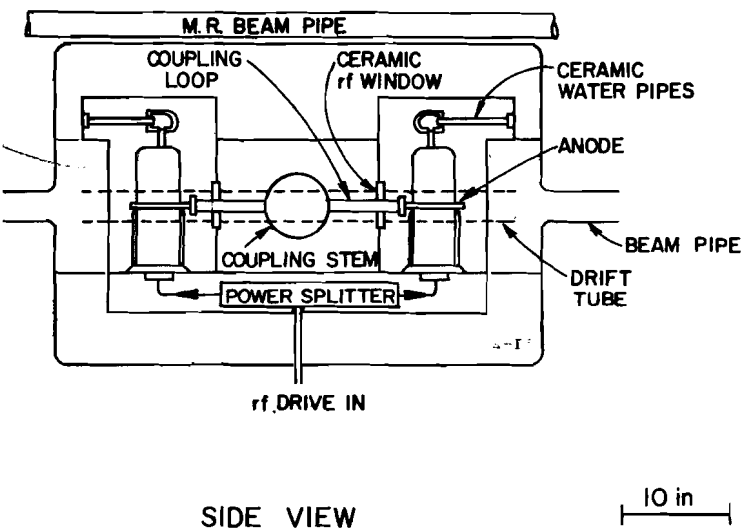

Fig. II-3. End and side views of rf cavity and power amplifier.

similar structure, the 4CW100,000 (slightly modified) is used extensively at Fermilab and has given good performance and service life.

In practice the cavity will have the octagonal cross-section shown in Fig. II-3. This shape presents convenient flat surfaces for connection of power amplifiers. The four power tubes are mounted vertically, two on each side of the cavity. Each tube is coupled to the cavity through ceramic vacuum seal rf windows adjacent to the anode circuit of the tube.

The tubes will be operated in grounded-grid configuration with the screen grid actually grounded and the rf-bypassed control grid operating at a negative dc potential to provide the required screen-grid voltage. Since one of the performance limitations at 100 MHz is the displacement current required to charge the anode-screen capacitance, operation with grounded screen eliminates the necessity for a low-impedance, high current-capacity screen-bypass capacitor.

We have chosen to power each cavity individually instead of having the three cavities coupled through irises or side cavities, because such a long coupled structure with a more complex geometry may be prone to having undesirable parasitic modes. Such modes, when excited by the beam, may induce coherent longitudinal oscillations of the beam bunches that will degrade the duty factor of the slow extracted beam or, in extreme cases, cause loss of beam. We could also put all the power amplifiers on an rf manifold and couple the manifold to the individual cavities through unidirectional couplers, but the manifold and couplers are costly and the four-tube-per-cavity arrangement already provides the desired redundancy.

The frequency tuning range required from the injection energy of 100 GeV to infinite energy is $\Delta f/f = 4.3 \times 10^{-5}$. This value is of the same order as the amount of detuning necessary to compensate for beam-loading effects, which is approximately $\frac{\Delta f}{f} \sim 4.5 \times 10^{-5}$ for $Q \sim 22000$. This tuning can be accomplished by mechanically moving a pair of flux-blocking vanes extending through the sides of the cavity. Alternatively, tuning can be accomplished electrically by varying the reactance (e.g., with biased ferrite) of a pair of plugs electrically coupled to the central conductor (drift tube).

It may be convenient to increase the tuning capability slightly to minimize the complexity of the cavity temperature-control system.

3. <u>Driver and low-level control</u>. The low-level rf-control system and power-amplifier excitation system are shown in block form in Fig. II-4. During injection into the ring, the rf frequency is to be phase-locked to twice the Main Ring

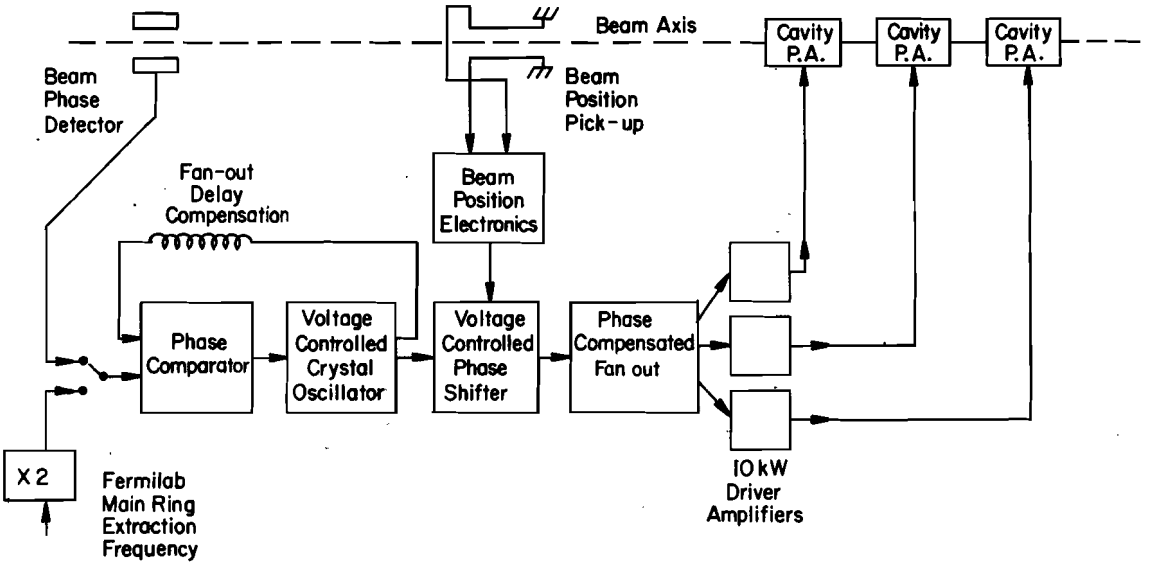

Fig. II-4. Low-level rf system.

extraction frequency. Such a system is presently employed for injection from the booster into the Main Ring at 8 GeV and the technology is well developed.

After injection, the phase of the rf will be controlled by a beam phase and radial-position feedback system, as shown in the block diagram. This system will make possible arbitrary movement of the beam for diagnostic and extraction purposes and it will automatically accommodate to a variety of ramp slopes.

Each cavity with its four power-amplifier tubes will require driving power (in grounded-grid service) of approximately 8 kW. Three-10 kW driver amplifiers with their associated series-tube modulators and power supplies will be located in an existing gallery above the rf-cavity location. Anode power for the final amplifiers is presently expected to be derived from existing power sources of the Main-Ring rf system.

E. Beam-Abort System

In a superconducting magnet ring, a fast high-efficiency protective beam-abort system is important. In case of component failure, one should be able to eject the beam from the ring rapidly and bury it in a beam stopper. If the beam is allowed to strike the ring magnets, heating by the beam will in most cases cause the magnets to quench. In addition, the radioactivity induced by the beam is undesirable.

1. General description. A protective system must be reliable; the simplest and most straightforward scheme is the most reliable. We have chosen a scheme similar to that employed for extracting the beam from the Booster. This system is straightforward and has shown very good reliability during five years of continuous service in the Booster.

In this scheme, the beam is kicked by a fast kicker across a pulsed septum placed at an odd multiple of 90° betatron phase downstream. The pulsed septum forms the first element of a transport system that conducts the beam out of the accelerator and onto a beam stopper. In a manner similar to the injection and extraction systems, all magnet elements in the abort system are conventional and are located in long straight sections.

As described below, the slow-extraction system is horizontal and requires the use of the full horizontal aperture. Thus, in the abort system, the beam is deflected vertically to take advantage of the unused but available vertical aperture in the circular bore of the ring magnets. The large vertical β function (123 m) at the upstream end of a long straight section where the septum is located also favors vertical deflection.

At the moment of an emergency abort, the horizontal position of the beam is unpredictable. For total protection, the septum must extend over nearly the full horizontal aperture of the ring. The iron septum of a Lambertson magnet cannot be uniformly thin over this width. Hence a current-carrying septum is used. The septum is pulsed to avoid the need of cooling. The rise time of the pulse should be short compared with the time it takes for the beam to strike the bore-pipe following a component failure. A rise time of 50 μsec is adequate.

2. Components.

a. Kicker. The kicker is located at the upstream end of long-straight section D and is composed of six sections of ferrite-core window-frame magnets. Each section has a length of 1 m and an aperture of 6 cm (h) × 3 cm (v), and is properly terminated in its characteristic impedance. These kickers are pulsed to a peak field of 1 kG with a rise time of about 0.2 μsec. They will kick a 1000-GeV beam downward by an angle of 0.18 mrad.

b. Septum. The series of septum magnets has a total length of 10 m, an aperture of 4 cm (h) × 2 cm (v), and a septum thickness of 2 mm. The cores will be stacked from 0.1-mm thick laminations so that the magnets can be pulsed to a half-sine wave with a half-period of 100 μsec, corresponding to a quarter-wave rise time of 50 μsec. The peak field is 10 kG and the total bending angle for a 1000-GeV beam is 3 mrad. Since the revolution time of the Doubler is only 21 μsec, during that time the variation of the field near the top of the sine wave is only approximately 0.5% and is quite tolerable. At the entrance of these septum magnets, which is located at the upstream end of long-straight section E, the downward displacement of the beam produced by the kicker is about 2 cm, ample to clear the septum. At the end of these septum magnets, the beam will be 3.5 cm below and at a downward angle of 3 mrad with respect to the Doubler orbit. These septum magnets are followed by sections of higher-field (say, 20 kG) dc magnets that deflect the beam further downward onto a beam stopper buried underneath the tunnel floor.

c. Beam stopper. A simple steel cylinder 3 m long and 1 m diameter will suffice. For added safety, it may be advisable to insert from the front end an aluminum (low-Z) core 1.5 m long and 10 cm in diameter to reduce the thermal shock in case the beam is very narrowly focused. To supply more efficient shielding against neutrons, one may want to surround the stopper with 0.5 m thick concrete. More than 90% of the energy contained in a 1000-GeV beam will be deposited in this stopper.

3. Trigger, timing sequence, and efficiency. The beam-abort system should

normally be triggered every pulse at the end of the beam spill to clean out any small amount of beam remaining in the ring. This will also keep the whole system in proper working condition. Emergency triggers could come from:

(i) Ring-magnet quench

(ii) Loss of rf

(iii) Excessive radiation around the ring

(iv) Excessive horizontal or vertical excursion of the beam.

Other types of triggers may be added as one gains experience in operation.

When an abort trigger is received, the septum is pulsed immediately. This is followed 36 μsec later by the pulsing of the kicker. To keep the geometry of the deflected beam to the stopper fixed during the accelerating ramp, the power supplies of all the magnets must be ramped accordingly, reaching the values given above only at 1000 GeV.

The kicker displaces the beam downward across the septum at a rate of 20 mm/0.2 μsec = 100 mm/μsec. The fraction of beam hitting the 2-mm septum is, therefore, 2 mm/(21 μsec × 100 mm/μsec) ≅ 0.1%. Even for a full-intensity beam of 5×10^{13} protons, this amounts to only 5×10^{10} protons hitting the septum, which is entirely tolerable.

Immediately following an emergency abort, injection from the Main Ring will be inhibited until the faulty condition is rectified.

F. Colliding Beams Between Main Ring and Energy Doubler

With both the Main Ring and the Energy Doubler in the same tunnel, it is possible to obtain colliding-beam operation between the two beams. To do this one would inject the 8 GeV beam from the Booster backward into the field-reversed Main Ring. This beam circulating counterclockwise in the Main Ring would be accelerated to 100 GeV, then transferred to the Doubler, also with field reversed. The beam would then be accelerated to say 1000 GeV in the Doubler and stored there. In the meantime, the field in the Main Ring would be returned to its normal direction and a normal clockwise-circulating beam accelerated to some desired energy in the Main Ring. The oppositely circulating beams would then be brought together by steering magnets to collide in a long straight section.

In the following we examine the component systems needed and the performance capabilities of this colliding-beam operation.

1. Operating the Main Ring and the Doubler in the reversed direction. Some slight modifications in the power supplies and the controls are needed to reverse

the current in the Main-Ring dipole circuit. After the current is reversed, the magnets should be pulsed to full current several times to retrain their remanent fields.

To inject the 8-GeV beam from the Booster backward into the Main Ring, one can either turn the beam 180° at the end of the Transfer Hall by some high-field (approximately 65 kG) dipoles and inject backward into the same long straight section A or perhaps more realistically, one can add a second independent backward 8-GeV beam-transfer system. Reversing the excitation current in the Doubler and transferring the beam from the Main Ring to the Doubler in the reversed direction is not difficult. The transfer process was discussed in Section B of this Appendix.

2. Geometry of the colliding beams. The beams are parallel-displaced by dipoles to collide head-on in the middle of a 51-m long straight section, it is most advantageous to position the two rings so that their orbits are as close as possible. This has been a major consideration in locating the Doubler 16 in. underneath and running parallel to the Main Ring. The geometry of the two beams in the long straight section is shown in Fig. II-5. For this geometry, the highest center-of-mass energy is obtained when the Doubler beam is at its full energy of 1000 GeV and the Main-Ring beam is at the highest energy permitted by the strength of the dipoles that displace the beams to collide. The level arm on either side of the colliding-beam region depends on the length ℓ in the middle of the long straight section taken up by the colliding beams. If one assumes 6-m long dipoles with peak field of 42.344 kG, the same field as the Doubler dipole, one finds

Main-Ring beam energy (GeV)	300	400
Beam colliding length ℓ (m)	10.0	3.8
Beam separation at end of common dipoles s (in.)	4.2	3.4

These results show that 1000 GeV on 300 GeV is reasonable, provided the inboard dipoles that are used in common by both beams have an aperture larger than 4.2 in. This geometry gives 10 m for the length over which the beams collide, which may be longer than necessary. If the peak dipole field can be extended to 60 kG, the corresponding values are:

Main-Ring beam energy (GeV)	400	500
Beam colliding length ℓ (m)	13.3	9.5
Beam separation at end of common dipoles s (in.)	4.8	4.1

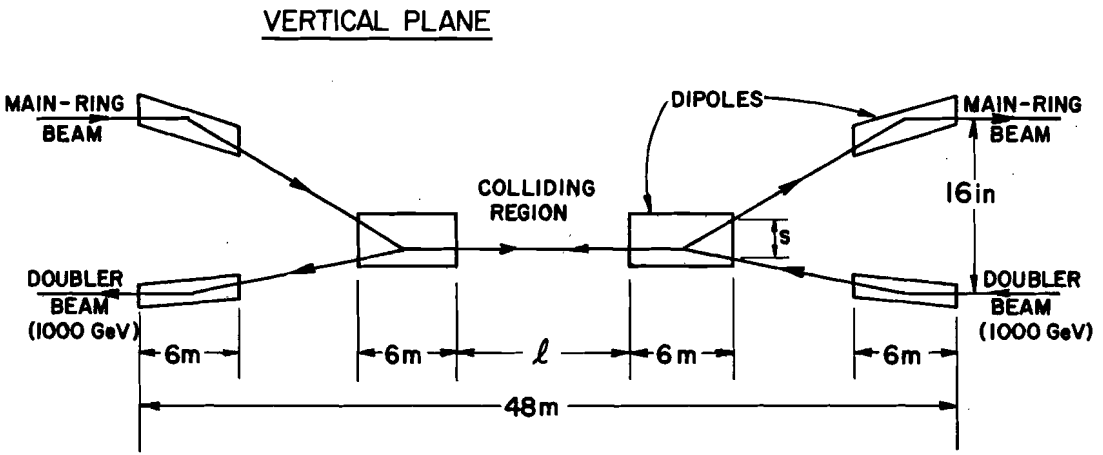

Fig. II-5. Geometry of colliding beams.

This shows that 1000 GeV on 500 GeV can be reasonably managed with 60-kG fields.

Displacing the beams vertically produces a vertical dispersion over the colliding-beam region, but the increase in beam height from this dispersion is small. More detailed study is needed on the step-by-step procedure of arriving at these beams and the colliding configuration.

3. Luminosity and tune shift. The luminosity of two beams with currents I_1 (in A) and I_2 (in A), and identical cross-sectional area a (in mm^2) colliding head-on over a length ℓ (in m) is given by

$$L = (0.26 \times 10^{32}\ cm^{-2}\ sec^{-1})\ \frac{I_1 I_2}{a}\ \ell. \tag{2}$$

For an estimate of the lower limit for, say, 1000 GeV on 300 GeV, we take the radius of both beams to be 1.5 mm (that at 300 GeV) and the current of both beams to be 0.15 A, corresponding to 2×10^{13}p/p. Over a 10-m colliding length, the total luminosity will be $0.8 \times 10^{30} cm^{-2} sec^{-1}$. If we take a beam intensity of 5×10^{13}p/p and a beam radius of 1 mm (roughtly that at 1000 GeV) we get an upper limit which is $(2.5 \times 1.5)^2 = 14$ times larger of $1.1 \times 10^{31} cm^{-2} sec^{-1}$.

Assuming a Gaussian beam profile, the beam-beam tune shift of beam 1 due to beam 2 is given by

$$\Delta\nu_1 \cong 0.096\ \frac{\beta_1}{\gamma_1}\ \frac{I_2}{a_2}\ , \tag{3}$$

where β_1 and γ_1 are respectively the amplitude function in the colliding region and the energy in mc^2 units of beam 1. The larger tune shift is that of the 300 GeV beam ($\gamma_1 = 321$, $\beta_1 = 70$ m). For the lower and upper limits of luminosity given above, we find for $\Delta\nu_1$ the values 0.004 and 0.025. The larger value is higher than the conventionally assumed tolerable limit of 0.005, but the real limit still remains to be determined empirically.

We not examine the various possibilities of increasing the luminosity beyond the upper limit given above. We can increase the 300-GeV beam current I_1. This will leave the tune shift of this beam unchanged. Continued effort is spent in improving the Main-Ring beam intensity.

The current I_2 of the 1000-GeV beam in the Doubler can be substantially increased by momentum stacking in the manner of the CERN ISR. But if the luminosity is indeed limited by the tune shift of the 300-GeV beam, increasing I_2 will not help, because both the luminosity and the tune shift have the same linear dependence on I_2.

One can reduce a by reducing the amplitude function in the colliding region. This can be done by retuning the matching quadrupoles in the long straight section. Assuming both β_1 and β_2 are reduced by a factor 10 from 70 m to 7 m, $a(=a_1 = a_2)$ will be reduced by a factor 10. This leaves the tune shift unchanged, but improves the luminosity by a factor 10.

Because the wavelengths of both the Main-Ring rf (5.6 m) and the Doubler rf (2.8 m) are shorter than the beam-colliding length (10 m), bunching the beams will not increase the total luminosity. This bunching will, however, localize the luminous region, which may be advantageous for certain experiments.

We conclude, therefore, that it is feasible in principle to collide the 1000-GeV Doubler beam with the Main-Ring beam at 300-500 GeV. The maximum luminosity obtainable over a 10-m length can be in the range of 10^{30} - $10^{31}cm^{-2}sec^{-1}$. As mentioned above, there are many operational problems, such as beam stability, beam switching, vacuum, duty factor, and so forth, that must be further studied in detail.

G. Extraction System

Both slow and fast modes of beam extraction are required for the Energy Doubler in order to optimize its use for physics experiments with fixed targets. As in the design of the beam-transfer system, we take as a design criterion that all magnet elements that may be sprayed by stray beams should be conventional and should be located in long straight sections where the vacuum pipe bore is warm. In addition, the extraction channel is designed to transport the extracted beam to the existing Main-Ring external-beam line. The present beam switchyard will be modified to transport the 1000-GeV beam to various existing experimental areas and facilities.

1. Slow extraction. As stated in Section C of this Appendix, the horizontal third-integer resonant-extraction scheme operation at ν = 19-1/3 will be used for slow extraction from the Doubler. In this scheme, the horizontal width of the beam is resonantly excited by a sextupole to grow at an increasing rate per turn. The outer part of the beam then steps across an electrostatic wire septum and is deflected by the septum to enter an extraction channel, which begins at the upstream end of long-straight section A (LA).

The sextupole is placed in long straight section D 10 m downstream of the midpoint D0. The electrostatic septum is located at the downstream end of long-straight section F and positioned so that the septum is 2 cm outside the central

orbit. For the third-integer resonance, the oscillations of the particles return to the same phase every three revolutions but with larger amplitudes. With a sextupole strength of $B''\ell = 2.4 \times 10^4$ kG/m and a betatron tune of $\nu = 19\text{-}1/3$, the beam half-width at the septum will grow from 2.0 cm to 2.9 cm in three turns. The 0.9-cm wide part of the beam that is inside the aperture of the electrostatic septum is deflected 0.06 mrad by the septum. To deflect the 1000-GeV beam by 0.06 mrad, the electrostatic septum must be 6 m long and operate at a field of 100 kV/cm. As it arrives at the entrance of the extraction channel, this deflected beam will be 0.42 cm wide and separated from the undeflected part of the beam by a gap of 0.32 cm. This separation is adequate to clear the iron septum of the Lambertson magnet that constitutes the first element of the extraction channel. The part of the beam passing just outside the channel aperture will continue to circulate around the ring and be extracted three turns later.

The largest beam excursion in normal cell-dipoles is ±2.8 cm and occurs in sector F between the electrostatic septum and the extraction channel. The aperture radius 1.125 in. = 2.86 cm of the ring dipole is thus just adequate. The largest beam excursion anywhere is ±3.1 cm and occurs in quadrupoles immediately downstream of the long straight sections. Quadrupoles should therefore have an aperture radius larger than 3.1 cm or about 1.25 in.

With a step size of 9 mm and an effective electrostatic septum thickness of, say, 0.1 mm, the extraction efficiency should be close to 99%. During extraction, the horizontal betatron tune is shifted from 19.4 to 19-1/3 either by the normal-cell quadrupole or by a conventional extraction quadrupole located in a long straight section at proper betatron phase relative to the electrostatic septum.

This system can also be employed for the medium-fast extraction (coherent extraction) in the same manner as is done on the Main Ring.

2. Fast (one-turn) extraction. Fast extraction is accomplished simply by a fast kicker located at the downstream end of LA. The kicker has a length of 3 m, a peak field of 1 kG and a rise time less than 0.2 μsec. It will be able to kick the beam 0.09 mrad. The displacement at the entrance to the extraction channel from this kick will be 6.6 mm, adequate to clear the channel septum.

3. Extraction channel. Beginning at the upstream end of LA, the first elements are sections of Lambertson iron-septum magnets totalling 20 m in length and operating at an average field of 8.9 kG. The entire beam channel is shown in Fig. II-6. These magnets bend and beam vertically upward by 5.35 mrad. After the Lambertson

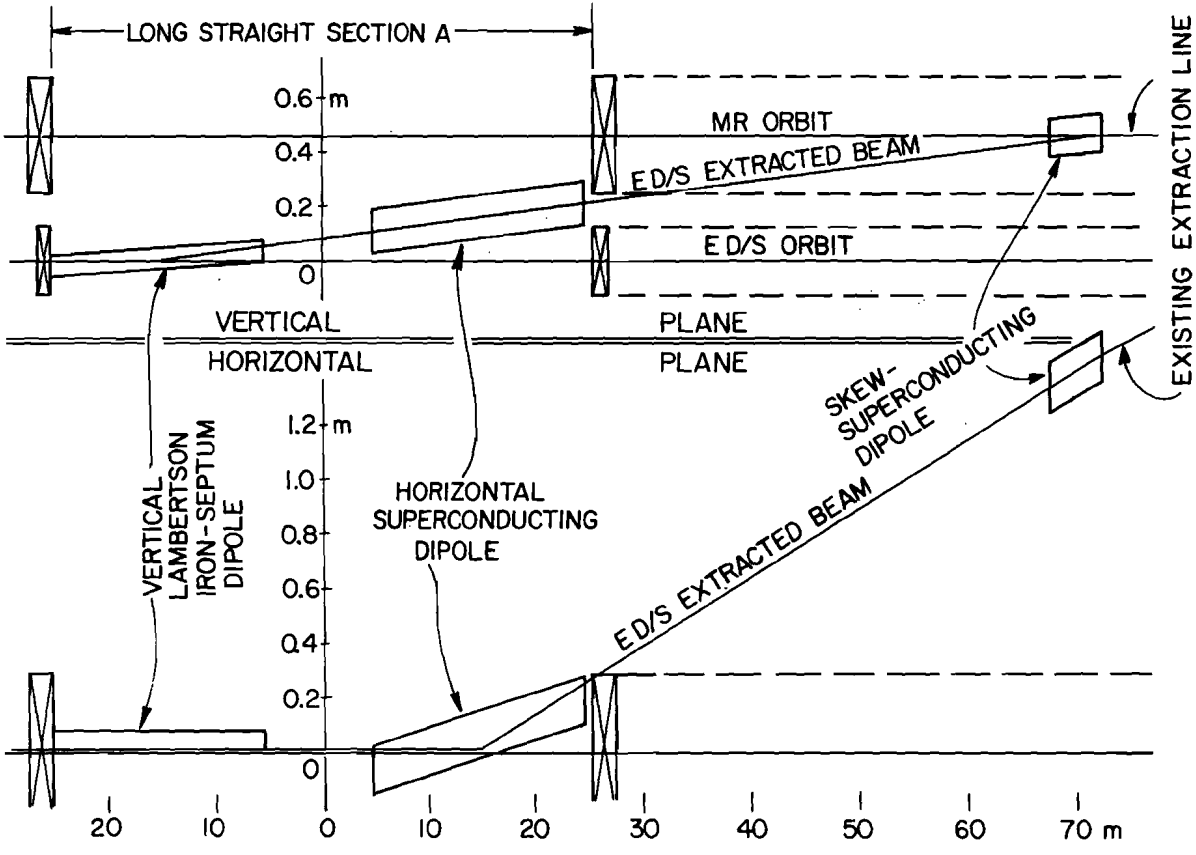

Fig, II-6. Vertical and horizontal views of Energy Doubler extraction channel.

magnets, the beam drifts for 10 m, then enters a series of superconducting dipoles with a total length of 20 m and an average field of 40 kG. These dipoles are far enough downstream from all the septa so that there is no danger of their being sprayed by stray beam. These dipoles deflect the beam horizontally outward by 24 mrad. The combination of 5.35 mrad up and 24 mrad out will make the beam cross the present extracted-beam line about 5 m from the end of the Transfer Hall, where sections of superconducting dipole with a total length of 4.8 m and an average field of 40 kG tilted at a 20° angle from the horizontal will deflect the beam vertically downward by 5.35 mrad and horizontally inward by 2 mrad to follow the existing beam line. Superconducting quadrupoles will be installed in the transport line after the 20-m dipole to produce the desired beam optics.

With the 4.8-m dipoles turned off, the existing extraction channel can be operated for the beam extracted from the Main Ring without modification or interference. If desired, the 4.8-m section of superconducting dipoles can be replaced by a longer section of conventional dipoles having the same bending strength. These conventional dipoles can be turned on and off rapidly to switch between the Doubler and Main-Ring pulses.

The extraction system described here was discussed in Ref. 1. In addition, the work of Collins and Edwards[2] has led to a better understanding of the aperture, extraction system, and correction elements. The work reported in this appendix depends on their calculations.

REFERENCES

[1]Third-Integer Resonant Extraction from the Energy Doubler/Saver. TM-593. L. C. Teng, June 30, 1975.

[2]A Discussion of Aperture and Space Allocation in the Energy Doubler/Saver. TM-614. T. L. Collins and D. A. Edwards, September 1975.