APPENDIX XI. COOLING SYSTEM

C. Rode, P. VanderArend and R. J. Walker

A. Development of the Cooling System

Conceptual work was started in the fall of 1972 on a refrigeration system to provide cooling to a complete ring of approximately 20,000 ft length. At that time, a basic decision was made that warm iron would be used. This decision determined to a great extent the space available for coolant passages in the magnets; as a result, a limited cross section was available for flow of liquid helium.

Since 1972, several different methods of supplying and distributing this refrigeration have been studied. All these methods are characterized by a system that puts liquid helium through the region containing the coil windings. This liquid is in a state in which the static pressure on the liquid is higher than the saturated vapor pressure at the temperature of every point. Liquid in this condition is referred to as subcooled liquid. It could also be said to be at overpressure, the term which is used in bubble-chamber operation.

B. Magnet Cooling

A magnet vessel filled with subcooled liquid will be completely full of liquid; no gas will be present. This kind of filling has many advantages and appears to be the only practical way of operating very large magnet systems. One advantage is that flowing of fluid through the magnets and piping can be controlled and predicted exactly because the density and flow resistance vary only slightly with position throughout a given flow system. This flow, referred to as "one-phase", has the highest cooling capacity attainable, as well as the highest heat capacity to compensate for any local surges. All these facts contribute to the stability and reliability of the superconducting system.

The earliest concept of cooling was a continuous flow of liquid helium around the ring, with booster pumps providing the necessary driving force. At the booster-pump stations, the liquid would be recooled by means of heat exchange with boiling liquid helium. Figure XI-1 is a schematic representation of such a

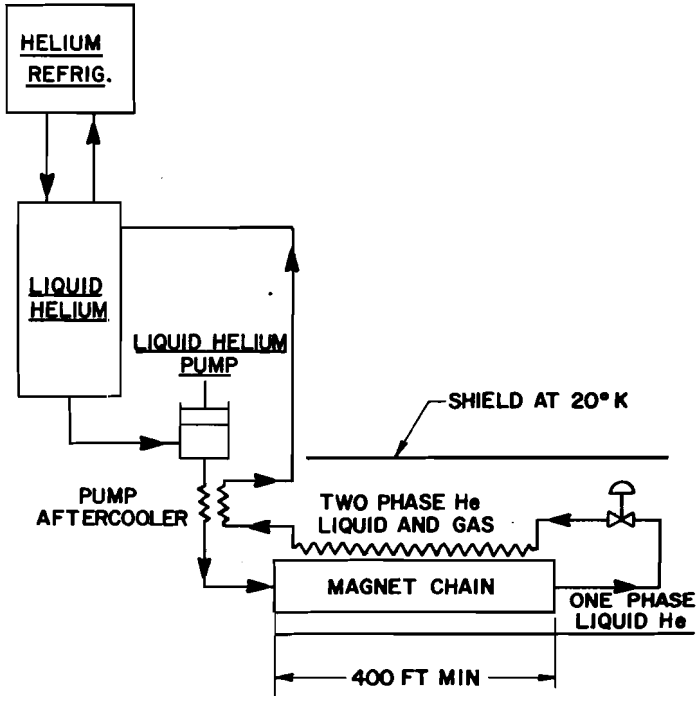

Fig. XI-1. Schematic of magnet cooling concept.

system. The flow of liquid through the magnet structure is one-phase, primarily because control of two-phase flow in the magnet structure is difficult. When flowing a two-phase mixture through the magnet structure, the cooling channels inside the windings of the magnet can by definition contain a fluid with a density somewhat less than that in the longitudinal flow channels, because generation of heat will vaporize the liquid; to drive this mixture through the magnet structure, a density difference is required. The quality of the two-phase mixture will thus change between pumping stations and cooling of the windings of magnets at the beginning of the string will be much different from that of the end of the string.

In order to provide uniform cooling independent of the position of the magnet along the string, it is believed that one-phase fluid cooling is necessary. To increase the mass of the fluid in the cavities of the magnets, liquid is the preferred phase. The minimum flow rate is determined by the heat load, distance between heat exchangers and allowable temperature rise of the helium in passing through the string between heat exchangers. Doubling the distance means doubling the flow rate. This, in turn, means an increase of pressure drop by a factor eight.

The concept described above has several disadvantages. The major one is a temperature rise along the flow path. In addition, liquid needs to flow all the time through the complete ring and it is impossible to deactivate a section of the ring while maintaining the rest of the ring at operating temperature.

The solution to the problem of temperature variation is to replace the cooling at discrete heat exchangers by a system that cools all along the path at approximately a constant temperature. This can be accomplished by employing a return channel filled with boiling helium, surrounding the magnet vessel. This system will maintain a string of magnets between heat exchangers at essentially a constant temperature. It also separates the total ring into 6, 12, or 24 separate systems, each of which forms an independent module. At present, this counterflow method appears to be superior.

Figure XI-2 is an illustration of a counterflow system. The pressure in this case is provided by a liquid pump. Another option under consideration is to use flow directly out of the liquefier and eliminate the pump. The pump increases the cost, but adds greater reliability. Figure XI-3 shows a typical distribution system.

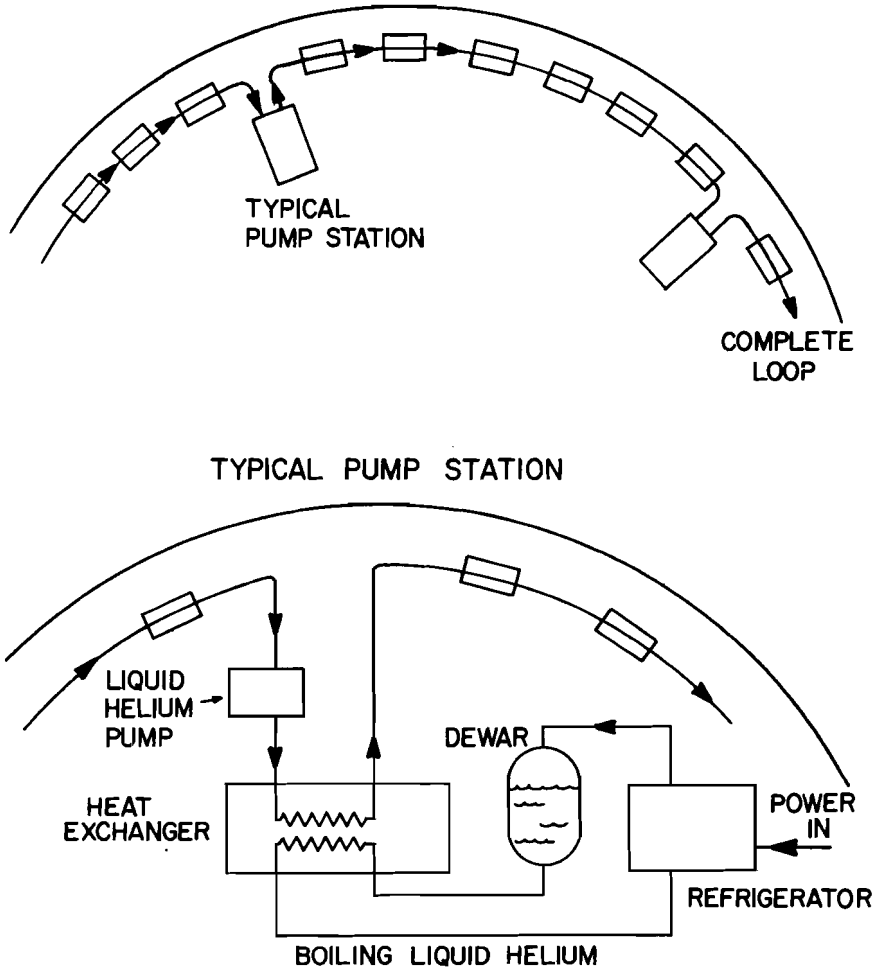

Fig. XI-2. Schematic of a distributed refrigeration system.

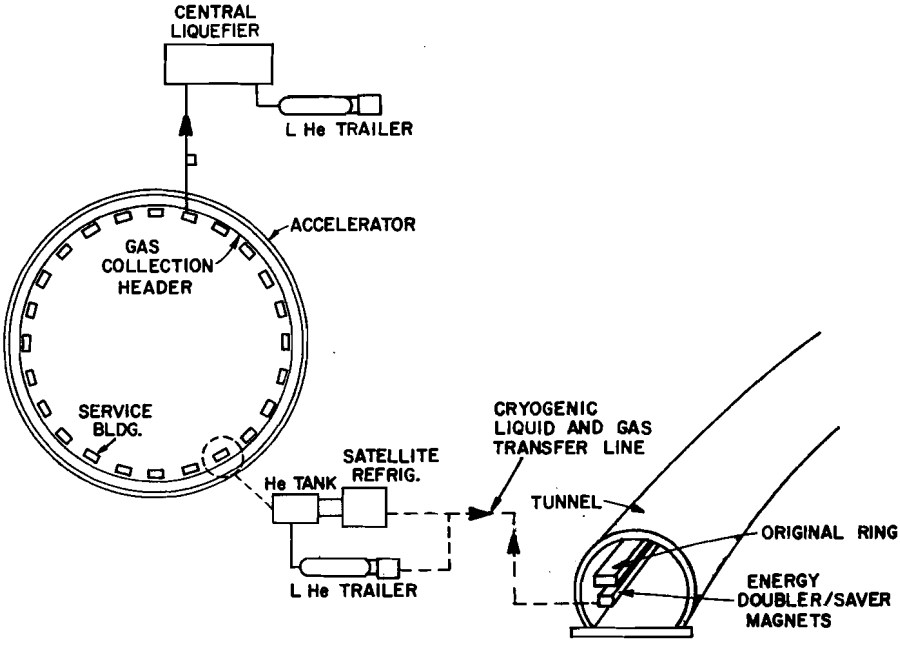

Fig. XI-3. Schematic layout of cooling system.

The system has the following advantages:

(i) Magnets operate at a constant temperature independent of location in the ring, except for the small temperature gradient caused by pressure drop in the two-phase flow channel.

(ii) By directing the flow away from a heat exchanger or refrigerator station and back to the same station, we form independent modules.

(iii) Control of the flow system is extremely simple compared with a system employing parallel controls for each magnet.

(iv) Fluid density in the magnets is high.

(v) No external transfer-line system with flow distribution is required.

(vi) Flow rate may be varied to compensate exactly for the total heat input to the system. All heat input must end up in the returning two-phase system.

C. Refrigeration System

A number of different options for generating the refrigeration of the superconductors have been considered. We describe three here; local refrigerators, a single refrigerator with transfer all the way around the ring, and an optimized combination. Studies have indicated that the last alternative is the most effective and economical.

The refrigerator system for removal of heat from the Doubler system could be made up of 12 or 24 independent refrigerators located symmetrically around the ring. If 12 refrigerators are used, the capacity of the units needed is approximately 950W at 4.5K and 1,250W at 20K. To enhance reliability of the units, turbo machinery would be used. As a consequence, each unit would require approximately 1,000 bhp of connected compressor capacity. The large requirement for power along the ring is the major disadvantage of this proposed system.

A system employing a centrally located refrigerator with distribution of cryogenic fluids is possible, but it requires a large vacuum-jacketed transfer-line system paralleling the complete ring for the following fluids:

a) Liquid helium at 4.5K at a rate of 5,280 lb/hr.

b) Gaseous helium at 4.5K at a rate of 5,000 lb/hr.

c) Gaseous helium at 15K at a rate of 2,280 lb/hr.

d) Gaseous helium at 25K at a rate of 2,280 lb/hr.

The gaseous helium streams are at high pressure (approximately 20 atm). In order to provide a line of this type, the refrigeration load at 20K of the system may increase by 50 to 100%, unless liquid-nitrogen shielding is used in the line. The line will be very large, with a jacket diameter of approximately 16 in. at the point where the central liquefier-refrigerator connects. Its cost has not been determined, but is expected to be at least $4 million.

A system of central liquefier and satellites will reduce the demand for power along the ring. The system is a hybrid between the initial system of local refrigerators and a system using only a centrally located refrigerator. It is the kind of refrigeration that matches the distribution system illustrated in Figure XI-3.

The system of satellite refrigerators with a central liquefier reduces the demand for liquid helium from the central facility from 5,280 to 600 lb/hr and the demand for gaseous helium for shield cooling from 2,280 lb/hr to nothing. As a consequence, liquid helium from the central facility may be distributed either by semitrailer of 10,000 gallon capacity or by a small-diameter liquid-helium transfer line of simple construction.

The total power requirement of the central liquefier with a capacity of 960 lb/hr (approximately 50% excess capacity) and the 24 satellite refrigerators, each capable of providing 700W at 4.5K and 625W at 20K is of the order of 5.2MW compared with 9.8MW for the 12 refrigerator case. In addition to this, it is possible to reliquefy nitrogen at the central liquefier facility at a considerable cost saving over the 12-refrigerator case with each of the 12 refrigerators requiring liquid nitrogen. The satellite refrigerators do not require liquid nitrogen for the proposed operating mode.

D. Central Liquefier

There are many other advantages to a central liquefier. Larger plants are much more efficient, for example in the expanders and compressor. This, of course, enhances the power saving. Maintenance can be in one location, eliminating lost time and extra traveling. There is also less overall equipment to install.

A central helium liquefier to match these requirements is currently in the design and construction phase. This plant consists of three large compressors, a helium reliquefier and a nitrogen reliquefier. The compressors from both the nitrogen and helium reliquefiers and part of the nitrogen reliquefier have been

obtained as surplus from an Air Froce liquid-oxygen plant located near Los Angeles, California.

Our plan is to use two of the compressors for helium instead of air service (as they were previously), which will necessitate operating them at one-half of their rated horsepower. The compressor providing flow for the nitrogen reliquefier will run at near full power. Under these conditions, the design output of the plant is approximately 1,100 lb/hr (4000 ℓ/hr) of liquid helium with both compressors running. The design output of the nitrogen reliquefier is 5,000 lb/hr (2800 ℓ/hr) of liquid nitrogen.

The current plan is for the central helium liquefier to be operational in the fall of 1977.

Many possible uses exist for the central liquefier. It can provide refrigeration for beam-line magnets. Depending on the actual heat loads developed by the Doubler system, it may be possible to run only one helium compressor at a time. In the event of future expansion of liquid-helium requirements, it would be possible to rearrange the cylinders on the helium compressors and to approximately double the plant output. This would require an expenditure of approximately $200,000 to buy some additional cylinders.

E. Satellite Refrigerators

The basic operating mode of the satellite refrigerator extracts refrigeration from liquid helium supplied by the central liquefier and amplifies the available refrigeration. Table XI-I provides the design ratings of a satellite refrigerator, of which 24 would be required to cool the Doubler system.

Table XI-I. Satellite-Refrigerator Parameters

Liquid helium supplied by central facility	70-100 ℓ/hr
Refrigeration at 4.5K	480 W
Refrigeration at 20K	625 W

The satellite refrigerator consists of a compressor package that supplies approximately 300 lb/hr of oil-free helium gas at 20 atm to the cold box. The cold box consists of heat exchangers and employs two reciprocating expansion engines. The refrigeration cycle is balanced in such a way that all the refrigeration available in the liquid helium supplied by the central liquefier is extracted. By doing this, the satellite refrigerator produces some 700 ℓ/hr of liquid helium. This

liquid vaporizes in the magnet system and is returned as cold vapor for reliquefication by the satellite refrigerator.

Reliability of the satellite refrigerator system is high, for the following reasons:

(i) The compressor package consists of ammonia refrigeration compressors. These machines are commercially produced and have a proven record of reliability.

(ii) The expanders are installed in separate canisters. This allows quick removal and replacement with a spare unit. During the absence of an expander, the satellite refrigerator can produce the same amount of refrigeration through the addition of more liquid helium at a rate of 400 ℓ/hr coming out of storage. While the expander is being repaired, the central liquefier will liquefy the extra gas.

The satellite refrigerator is a versatile unit that can make liquid helium and supply refrigeration without the addition of liquid helium from an external source. It will do this through the addition of liquid nitrogen. Table XI-II shows the capability of the refrigerator under various conditions. This table applies when no liquid helium is being supplied by the central liquefier.

Table XI-II. Performance Characteristics of the Satellite Refrigerator as an Independent Operating Unit

System	Capacity
a) Helium liquefier with liquid-nitrogen consumption (nitrogen consumption is 60 ℓ/hr)	90 ℓ/hr
b) Helium refrigerator with liquid-nitrogen consumption (nitrogen consumption is 25 ℓ/hr)	400 W

The performance listed in Table XI-II may be improved by providing a larger compressor package. The flow rates may be increased by 50% without generating a high pressure drop in the heat exchanger system of the satellite refrigerator. Refrigeration output will be in proportion to the flow rate.