CONCEPTUAL DESIGN REPORT

DIRECT NEUTRAL LEPTON FACILITY

CH - FNAL - FY87-1

FOR THE

U. S. DEPARTMENT OF ENERGY

CHICAGO OPERATIONS OFFICE

ARGONNE, ILLINOIS

PREPARED BY THE FERMI NATIONAL ACCELERATOR LABORATORY

CONTRACTOR APPROVAL:

for LEON M. LEDERMAN
DIRECTOR

DOE FIELD ORGANIZATION APPROVAL:

ANDREW E. MRAVCA
AREA OFFICE MANAGER
BATAVIA AREA OFFICE
U. S. DEPARTMENT OF ENERGY

"This Conceptual Design Report contains confidential commercial information that shall be used or duplicated only for official Governmental purposes, and this notice shall be affixed to any reproduction or abstract thereof. Disclosure of the confidential commercial information contained in this report outside the Government shall not be made without the advice of counsel. The restrictions contained in this notice do not apply to any data or information in this report which is not commercial information or to information generally available to the public on an unrestricted basis."

Cover Figure: A simulation of a tau-neutrino interaction in a bubble chamber photographed with holographic optics. The tau neutrino enters from the bottom (invisible) and produces many tracks, among them a tau meson (red) which decays into three charged particles (orange). Courtesy of Professor William Bugg, University of Tennessee, and the Tohoku University Bubble Chamber Group.

TABLE OF CONTENTS

		Page
I	PROJECT JUSTIFICATION	
	Statement of Need	I-1
	History of the Project	I-3
	Program Advisory Committee (PAC) Recommendations	I-5
	Recommendations from the Direct Neutral Lepton Workshop	I-10
	The Direct Neutral Lepton Facility	I-12
II	SCOPE - DESCRIPTION OF FACILITY	
	Overview - Purpose and Description of Facility	II-1
	Beam Pipe, Shielding and Enclosure NE-8	II-1
	Lepton Halls NLA, NLB and NLC	II-2
	Service Building NS-5 and Utilities	II-4
	Beam Transport System	II-5
	Target System	II-7
	Spoiler Magnets	II-9
III	DESIGN CRITERIA	
	Civil Construction	III-1
	Beam Transmission	III-1
	Target System	III-2
	Spoiler Magnets	III-4
	Spoiler Magnet Coil Design Criteria	III-5
	Spoiler Magnet Yoke Design Criteria	III-5
IV	WORK BREAKDOWN STRUCTURE	
	Project Organization	IV-1
	Work Breakdown Structure	IV-1

		Page
V	COST ESTIMATE	
	Cost Estimate Overview	V-1
	Cost Estimate Summary - Civil Construction	V-2
	Cost Estimate Summary - Technical Components	V-3
	Methodology - Quantity Estimates and Unit Costs	V-5
	Methodology - Applied Estimate Increments	V-6
VI	ENGINEERING AND CONSTRUCTION SCHEDULES	
	Construction Phases - Civil	VI-1
	Construction Phases - Technical Components	VI-1
	Construction Schedules	VI-2
	Conceptual Design Study - Schedule	VI-3
	Scheduling Methodology	VI-4
VII	PROJECT VALIDATION	
	Appendix A Schedule 44	A-1
	Appendix B Technical Data Sheets	B-1
	Appendix C Magnet Design Study	C-1
	Appendix D Radiation Safety Studies	D-1
	Appendix E Civil Construction Costs	E-1
	Appendix F Technical Component Costs	F-1
	Appendix G Drawings	G-1

Conceptual Design Report

Direct Neutral Lepton Facility

CH - FNAL - FY87-1

For the

U. S. Department of Energy

Chicago Operations Office

Argonne, Illinois

Prepared by the Fermi National Accelerator Laboratory

Contractor Approval

Richard Lundy

DOE Field Organization Approval

Andrew E. Mravca

Area Office Manager

Batavia Area Office

U. S. Department of Energy

"This Conceptual Design Report contains confidential commercial information that shall be used or duplicated only for official Governmental purposes, and this notice shall be affixed to any reproduction or abstract thereof. Disclosure of the confidential commercial information contained in this report outside the Government shall not be made without the advice of counsel. The restrictions contained in this notice do not apply to any data or information in this report which is not commercial information or to information generally available to the public on an unrestricted basis."

Cover Figure: A simulation of a tau-neutrino interaction in a bubble chamber photographed with holographic optics. The tau neutrino enters from the bottom (invisible) and produces many tracks, among them a tau meson (red) which decays into three charged particles (orange). Courtesy of Professor William Bugg, University of Tennessee, and the Tohoku University Bubble Chamber Group.

I

PROJECT JUSTIFICATION

1. STATEMENT OF NEED

The purpose of this project is to build a facility capable of doing a unique series of high energy physics experiments that cannot be carried out at any other high energy physics laboratory anywhere in the world. The energy parameters of the Tevatron, and the existence of several functional detector facilities in the Neutrino Area, make this project entirely feasible. The standard model predicts the existence of six quarks and six leptons. Five of the six quarks have been observed in the laboratory, and preliminary evidence for the sixth quark (top) has been announced by the UA1 experimenters at CERN. Of the leptons, five have been observed in various experiments and the sixth one (tau-neutrino) remains unobserved. Recent advances in the standard model have predicted that at Tevatron energies it is possible to produce enough of these tau-neutrinos to be able to observe them interacting in bubble chambers equipped with holographic optics.

This facility will produce a beam of tau-neutrinos and direct them at several existing detector facilities, enabling Fermilab experimenters to observe this missing component of the standard model. But it is impossible to detect this new particle in existing neutrino beams despite the high energy now available because the number produced is negligibly small compared to the number of ordinary neutrinos. This facility will increase the ratio of tau-neutrinos to ordinary neutrinos and increase the absolute number of tau-neutrinos entering the detector.

Presently, neutrinos are produced as tertiary beams (see Figure 1A). The primary proton beam is extracted from the Tevatron and directed toward a target. As the protons interact in the target many types of secondary particles are produced such as pions and kaons. The pions and kaons drift through a large pipe which is nearly 1,500 feet long. As they move along, they decay into muons and mu-neutrinos. Because only neutrinos must enter the experimental detectors, the muons must be stopped by passing them through more than 2,000 feet of dirt and steel (see Figure 1A). The neutrinos pass through this obstruction easily and proceed toward the detectors. Tau-neutrinos are produced in the existing configuration, but the angles at which they are produced are so large, and the detectors are so far downstream, that nearly all of them miss the apparatus.

In the proposed facility, leptons will be produced "promptly" by the interaction of an intense beam of protons in the target, instead of the decays of pions and kaons. The ratio of tau-neutrinos to other neutrinos is increased by absorbing the source of ordinary neutrinos (long-lived mesons) immediately in a long, dense target. But the muons which result from the decays are not absorbed in the target, so an additional absorber must be added (see Figure 1B). If a passive beam absorber composed of earth and steel is used, it would have to be 2,000 feet long in order to

absorb all the muons. Because of the large angle at which the "prompt" neutrinos are produced, and the distance of the detectors from the target, most of them would miss the detectors.

The only way to increase significantly the number of tau-neutrinos entering the detectors is to put the target close to the experimental apparatus (see Figure 1C). Following this scheme, five very large iron electromagnets will be installed to bend the unwanted charged muons away from the detectors, leaving only tau-neutrinos at the apparatus. As opposed to the passive beam dump of earth and steel, the active (magnetic) dump sweeps away unwanted particles and allows the detectors to be placed close enough to the target so that the absolute number of tau-neutrinos reaching the apparatus is greatly increased.

The criterion which determines how much bending is necessary is the width of the existing detectors and the desired distance from the target. The bending power of the magnets must be strong enough to eliminate unwanted charged particle background yielding useful tau-neutrino event rates at the apparatus.

The timing of this project is contingent on the scheduled runs of the existing neutrino beams being completed in 1987. Operating this facility is not compatible with the scheduled runs of the existing neutrino beams. The detectors used with this facility will be operating in the already scheduled runs, and therefore will still be active and maintained in 1988.

This facility may also provide physics opportunities beyond the observation of the tau-neutrino. There may well be additional neutrinos associated with extra generations of leptons not anticipated in the conventional standard model. In addition, recent developments in particle theory suggest the possibility of other neutral, heavier leptons. In particular, supersymmetric theories suggest the possible existence of light neutral partners of known particles (such as "photinos"). Other theoretical schemes predict classes of light spinless bosons, such as axions. The proposed facility would make it possible to search for some of these particles for the first time.

When the project is authorized, the world-wide high energy physics program will have a golden opportunity to discover new particles. Some of these discoveries are not possible at any other accelerator either existing or under construction. The project fills a natural extension in the Fermilab neutrino physics program, at a time when the detection will be well understood and experienced scientific manpower will be available to perform the experiments.

2. HISTORY OF THE PROJECT

This facility was first imagined around 1980. Based on a very preliminary design of solid iron spoiler magnets, the first two experiments, E-636 and E-646, were approved by the Physics Advisory Committee[1] in 1980 and 1981. During 1981 and 1982, a lengthy and detailed analysis was carried out to determine the exact size and shape of the spoiler magnet system needed to sweep away all the muons produced by 1000 GeV protons. Three universities and Fermilab participated in the study. A design report resulting from this study is attached as Appendix C.

The analysis demonstrated the need for air-core sweeping magnets following two small solid iron magnets, in order to prevent the creation of harmful backgrounds from the interactions of the muons in the iron. At that time, it appeared to be slightly more cost-effective to make the air-core magnets as a single, superconducting magnet as opposed to four conventional (warm copper coils) magnets.

During 1983 and 1984, the superconducting magnet coil was designed and the cost estimate for the entire project was refined by input from mechanical, electrical, and civil engineers. In May, 1984, an ad-hoc review panel, appointed by the Head of the Research Division, reviewed the engineering design of the superconducting coil, approved the design, but requested that the cost comparison between the superconducting and conventional versions be reexamined. Operating experience with the Tevatron was already indicating a considerably lower duty factor than was assumed in 1982, which would reduce the power costs for a conventional system. The panel also requested that the large load for cryogenic engineers to design, fabricate, conduct safety-reviews, and commission a large superconducting magnet be more realistically taken into account.

At the same time, a suggestion was made that the cost saving resulting from reducing the design energy from 1000 GeV to 900 GeV be examined. This suggestion was prompted by the observation that the Tevatron might never be able to extract high-intensity beams above 900 GeV. The ensuing redesign of the spoiler system and reanalysis of the muon sweeping power resulted in a 17% reduction of the cost estimate for the facility arising from the 10% energy reduction. Of even more importance was the fact that the new cost estimate, based on 1984 experience, indicated that the construction costs for the whole facility would be 5% lower for the conventional magnet option, that the annual operating costs for the competing options were approximately equal, and that the lead time was much shorter for the conventional magnet option.

These facts, plus the overburden of the cryogenic engineering staff of Fermilab, led to a firm decision to proceed with the 900 GeV conventional magnet option. This report presents only that option. In June, 1984, the Physics Advisory Committee reaffirmed its opinion that the physics priority of the prompt neutrino beam experiments was comparable with the best of other Tevatron experiments However, the committee recommended another year's delay if the equipment funding to Fermilab did not increase.

In September, 1984, a Schedule 44 was written for the project and submitted to the DOE in February, 1985 (see Appendix A). In October, 1984, a one-day workshop on the facility was held at Fermilab attended by 100 experimental and theoretical physicists[2]. The conclusion of the workshop was that there is even more interest in the physics potential of this facility than there was in 1982, as summarized in a letter to the Director of Fermilab.

3. PAC RECOMMENDATIONS

The Program Advisory Committee meets quarterly to assess the merit of physics proposals submitted to Fermilab and advises the director about inclusion of proposals in the experimental program. Proposals are also reviewed by the staff of the Research Division to determine the Laboratory's ability to carry out the experiment and evaluate the demands the experiment wil make on Laboratory resources. The Head of the Research Division then advises the PAC, as well as the Laboratory director. PAC endorsement of the DNLF first occurred in 1980 with approval of experiment E-636 (Tohoku bubble chamber), and E-646 (15' bubble chamber) in 1981.

In subsequent years, the PAC has reaffirmed its position that the DNLF should be given the highest priority among fixed target experiments. In 1984 recommendations, the Comittee stated that it considered the DNLF as comparable in physics priority with the best of the programs ranked. We reproduce here the General Recommendations of the PAC written at their June 1984 meeting. (In this document, DNLF is referred to by its previous names, "Prompt Neutrino Facility", or "Beam Dump".)

Physics Advisory Comittee Meeting

June 15 - 22, 1984

I. General Recommendations

Introduction

The construction of a cryogenic accelerator, its operation at 800 GeV, and the delivery of extracted beams for fixed target experiments are supreme achievements of modern technology. The Committee congratulates the Laboratory on its splendid work. We note that the major construction projects for the Tevatron and its associated facilities have stayed within the budget and are on schedule.

Over the past five years, in anticipation of the commissioning of these facilities this Committee has recommended a comprehensive program of experiments which utilize innovative electronic and visual detectors. This program directly confronts important issues at the forefront of elementary particle physics and provides unique opportuities for the discovery of new phenomena. The Laboratory Director has enthusiastically accepted our recommendations, and with the help of his staff, has developed plans to bring these experiments into operation in an efficient and timely fashion. A large number of physicists from all parts of the United States and from more than twenty other countries have committed their time and resources to these projects.

It is in the context of these major commitments of construction funds, scientific personnel, and resources that the committee is compelled to express its dismay at the inadequate level of funding currently in prospect to equip and operate the experiments and beamlines. Adequate and properly phased funding for equipment and operation must accompany such a large construction project in order to realize the goals of the program.

The Committee has been asked to advise the Director on how the Laboratory should react to the current low level of funding and possible further cuts in the budget. After carefully evaluating the program, we cannot recommend that any part of the currently approved program be cancelled. We are deeply concerned about the chilling effects the current funding situation will have on physics opportunities we envision for the future. We therefore strongly urge the Laboratory to continue seeking adequate funds to carry out this program, and to emphasize forcefully to the Department of Energy and HEPAP the value of the physics opportunities which are in jeopardy, and the disproportion between the magnitude of the Tevatron construction projects and the level of funding available to exploit the opportunities they offer.

Tevatron I

The Committee reiterates its very strong support for the physics opportunities of the Tevatron I program and the desire to realize those opportunities as soon as possible. It is pleased with the rapid progress on the Antiproton Source and the CDF detector. It recognizes that implementation of a test run in June-July, 1985 implies a very tight schedule for both the $\bar{p}$ source and CDF and that that goal may not be realized. However, it supports strongly the present schedule of a serious test run in the Spring of 1986, followed by a physics run of several months duration in the Fall of 1986. The Committee urges the Laboratory to adhere to that schedule if at all practical.

The Committee reaffirms its earlier commitment to the existence of a high quality second detector to exploit fully the physics of Tevatron I. It feels that the conceptual design of the DØ detector addresses well the physics opportunities, emphasizing those complementary to CDF. It is desirable to bring DØ into operation at an eary date. It seems unlikely, given the current budget, that this detector will be ready to produce physics before 1988. The Committee notes that the physics output of Tevatron I will continue to be rich through the mid-1990's and considers it important to have a second detector in place for as much of this period as possible. It endorses the DØ Technical Review, and notes that the full capabilities of DØ are not really known until a cryogenic and mechanical design of the calorimeter is available. The Comittee urges the Laboratory to provide manpower to help in this effort. It also notes the importance of finalizing the design of the DØ Hall as soon as possible so that its construction may begin during the 1985 shutdown.

The funding profile suggested by the Laboratory should enable construction of the DØ detector on a time scale nearly matched to the technical limitations, but it has little contingency. The Committee realizes that if the cost were to increase dramatically

without a corresponding budget increase, it could only be accommodated by a stretch-out, staged implementation or change in scope. The Committee feels that there may be opportunities for an optimization of the detector design leading to a reduction in the number of channels or a staged implementation.

Tevatron II

The Comittee has reviewed in detail the entire Tevatron II experimental Program. It is a vigorous and well-balanced program in a unique energy range which studies programmatically lepton, photon and hadron interactions, conducts crucial tests of QCD and electro-weak theories, studies production and decay of heavy quark states, and searches for new phenomena in the higher energy range of Tevatron II. There is little overlap in the physics potential of individual experiments, and the Committee found that no major experiment could be eliminated without significant reduction in the physics yield of Tevatron II. Thus, the present Comittee reaffirms the scientific approval given by previous PACs to all of the approved Tevatron II experiments.

As mentioned above, the DOE guidelines on capital equipment funding communicated to the Laboratory in March do not permit the timely utilization of Tevatron I and Tevatron II facilities. The Laboratory has submitted a plan (attached) that trims and stretches out the Tevatron II program (including the deferral of upgrades of the Proton-West and Meson-East beamlines). This scenario comes close to fitting within the guidelines, and, if there is no improvement in the budget, the Committee feels that this is a reasonable solution to an unfortunate problem.

In previous years the Committee assigned physics priorities within the Tevatron II program as follows: (1) Prompt Neutrino; (2) the Muon Beam and the Wide-Band Photon Beam; (3) the Meson-West Pion Beam; and (4) the Polarized Proton Beam. In reassessing this assignment of priorities the Committee has been unavoidably influenced by budget constraints and the cost to complete the Prompt Neutrino Beam and has separated that facility from the other major new beamlines. The Committee now ranks them in the following order: the Wide-Band Photon Beam, the Muon Beam, the Meson-West Pion Beam and the Polarized Proton Beam. The Committee regards the Prompt Neutrino program as comparable in physics priority with the best of the programs ranked above.

Scenarios and Relative Priorities

If the DOE is unable to supply even the inadequate capital equipment funds specified in its March guidelines, it will not be possible to realize the physics opportunities of Tevatron I and Tevatron II without a substantial delay in one or more of the programs. How the Laboratory should react to such a cut depends on its magnitude. If the shortage in FY 85 is at the level of $1-2M the Lab could

delay the Polarized Proton Beam. In the event of a more drastic shortfall in FY 85, the Committee reluctantly concludes it may be necessary to delay or reduce in scope the Prompt Neutrino program. The Committee makes this recommendation only because other attempts to save an equivalent amount of capital equipment funds would require substantial delay in the entire TeV I program or in at least three other TeV II experimental programs. The Committee feels that it is important that the TeV II programs in the existing beams and in the new Neutrino, Muon, Photon, and Meson-West Pion beams and the TeV I program, as realized by CDF, proceed on on schedule. It thus reluctantly accepts some delay in the Polarized Proton or Beam Dump programs, if necessary, to allow this.

The Committee believes that the Beam Dump does offer unique physics opportunities, that it is important to make a start on DØ, and that one cannot sacrifice opportunities for future fixed target experiments. Their relative priority in future years must depend on a reevaluation of the Beam Dum program, on the technical progress of DØ, and on proposals received from new TeV II experiments. It encourages the Laboratory to hold a workshop on the opportunities for experiments using the Beam Dump.

Future Fixed Target Opportunities

Tevatron II, as the highest energy fixed target machine in existence, presents unique experimental opportunities in hadron, photon and lepton physics. The program in place exploits these opportunities with a combination of revised older experiments and new experiments and facilities. Results from the initial round of experiments as well as other concurrent measurements will certainly point the way to a new generation of TeV II experiments.

The diversity and flexibility inherent in fixed target work will continue to provide important windows into interesting and perhaps unforeseen phenomena. Given the long time scale in the design and construction of modern experiments, the Committee recommends that the Laboratory encourage initiatives by holding workshops to explore future fixed target experimentation. At the same time, it is important that long range planning of the Laboratory take into account the financial impact of the construction of possible major new fixed target facilities.

4. RECOMMENDATIONS FROM THE DIRECT NEUTRAL LEPTON WORKSHOP

As suggested by the PAC, a workshop was held in October, 1984. The conclusions of the workshop are given in the enclosed letter:

10/19/84

To: Leon Lederman

From: James Bjorken and Thornton Murphy

Subject: Summary of Conclusions from the Direct Neutral Lepton Facility Workshop

The Workshop was very well attended, with about sixty attendees from universities. In addition, about fifteen Fermilab scientists attended much of the Workshop. The response to the scheduled talks was lively, and the open forums produced animated discussions of the problems remaining with this facility.

We summarize here the most important conclusions of the Workshop. These conclusions are the consensus of a group of about fifteen involved experimenters who met the day after the Workshop in order to summarize the proceedings.

1. The estimated rates for ν_τ production have held up since proposal submission three or four years ago; however, there are still some questions of A-dependence. With an $A^{2/3}$ law for production (presented by Morfin) and an assumed F/D ratio ~10%, the yield of $\nu_\tau/10^{18}$ incident protons is ~100; with A^1 (as argued by Baltay) the number is ≥500. The evidence, such as it is, seems to us to favor A^1. However, more information on F/D is vitally needed.

2. Workshop presentations by Jon Rosner and Sally Dawson demonstrated that the interest from the theoretical physics community in the discoveries possible in this facility have, if anything, increased in the last two years. In particular, there are many tests of supersymmetry models which can be done only at this facility, and not at LEP, SLC, or $Sp\bar{p}S$.

3. The holographic bubble chambers, which are the most important devices approved to use this facility have met important milestones. The proponents express optimism that they will achieve the spatial resolution necessary to detect a significant fraction of the taus produced by the tau-neutrinos. The Spring run of course will provide the hard evidence that is needed.

4. The facility design of October 1982 (Fermilab TM-1155) has withstood further scrutiny and engineering follow up and remains essentially sound. A Fermilab decision to reduce the design energy from 1000 GeV to 900 GeV has saved $2.5M in the cost estimate for this facility.

5. There is great disappointment and concern about the delay in the completion of this facility. The test run for the facility is scheduled for December 1987. Will the experimental groups hold together and be able to regroup for these experiments despite intervening commitments? Will the schedule slip more? Will Fermilab provide the necessary design manpower for the project, even with this stretched-out schedule?

6. The number of Ph.D. scientists who remain committed to do the experiments in 1988 is over 70. These scientists come from 17 institutions, including of course, a sizeable international component (Japan, Israel, and China) which has invested heavily in the program. The program is comprised of three independent experiments; in addition Walker et al retain a strong interest in using an augmented Lab C detector in the program as well.

There will also be a Fermilab Report summary of this Workshop. Transparencies of individual presentations are available upon request.

5. THE DIRECT NEUTRAL LEPTON FACILITY

The Direct Neutral Lepton Facility has been designed to provide a neutrino beam enriched in electron and τ (tau) type neutrinos $\nu_e(\bar{\nu}_e)$ and $\nu_\tau(\bar{\nu}_\tau)$, compared to conventional neutrino beams which are predominantly composed of muon-type neutrinos $(\nu_\mu(\bar{\nu}_\mu))$. A neutrino beam with a significant flux of ν_e and ν_τ allows one to perform several important experiments including measurements of ν_e - electron scattering and the explicit observation of the ν_τ. A series of experiments have already been designed to exploit the beam.

The enrichment of electron and tau neutrinos is achieved by forcing a primary proton beam, at the full energy of the Tevatron, to interact completely in a target block of copper. The target is several feet long. Charmed particles, D's and F's, produced in the primary interactions have short life times and decay before re-interacting in the target; their decays produce neutrinos of all types. The pions and kaons produced, which are a source only of muon neutrinos, tend to re-interact in the target block before they have a chance to decay. The net effect is to produce a beam which is predicted to be 48% $\nu_e(\bar{\nu}_e)$, 51% $\nu_\mu(\bar{\nu}_\mu)$ and 1% $\nu_\tau(\bar{\nu}_\tau)$ at 100 GeV. This can be compared to a conventional broad-band neutrino beam which consists of 98% ν_μ, 2% ν_e, and 0.01% ν_τ. Figure 2 shows the flux of ν_e, ν_μ, and ν_τ expected at the 15' Bubble Chamber[3], for the Direct Neutral Lepton Facility.

In order to exploit the direct lepton beam, the intense flux of muons inevitably associated with the beam must not be allowed to strike the experimental detectors. This problem is particularly acute since, to take full advantage of the flux of electron and tau neutrinos, the production target should be as close to the detectors as possible. To permit satisfactory operating conditions for the Bubble Chamber experiments, E-636 and E-646, the criterion has been set that fewer than 10 background muons pass through either Bubble Chamber per 10^{13} protons on the tungsten target.

The closeness of the target to the neutrino detectors precludes the usual technique of ranging out the muons produced in the target with a long steel absorber, and so a system of spoiler magnets has been designed to bend muons produced in the target away from the detectors. The primary proton transport has been designed to produce a minimum of losses either from scraping on magnet apertures or by interactions with residual gas in the beam pipe, because such losses can also produce a substantial flux of muons at the detectors.

The target for the prompt neutrino beam has been designed to accept 2.5 x 10^{13} protons at 1 TeV. The final section of the proton transport is designed for targeting at angles 0 and 40 mRadians. The facility beam will be available to the detectors presently in Enclosure NCE, NCF, NCG and NCH (Labs F, E, B, and C). NCE houses a 1 meter bubble chamber which was constructed by the Japanese part of the E-636 collaboration and arrived at Fermilab in December, 1983.

Proton Beam Transport

Figure 3 shows a layout of the primary proton transport system from extraction to the prompt neutrino target. The beam uses existing enclosures and pipe as far as enclosure NE8. From that point downstream, it is all new construction. Calculations of the muon flux at the two bubble chambers from interactions of the primary proton beam along its transport system indicate that losses of up to 0.01% can be tolerated upstream of NE8. However, in NE8 and downstream, beam losses must be restricted to one part in 10^7. These loss rates determine the beam size and the vacuum requirements.

As the proton beam passes through the Switchyard, its size is increased (1) by travsersing 8 vacuum windows made of 0.003 inches of titanium, and (2) by interaction of 1% of the beam on the extraction septa. Of this 1%, some 20% scatters elastically with essentially the same energy as the primary beam. These elastically scattered protons dominate the tails of the angular distribution of the beam. This tail contains about 1 part in 10^4 of the beam and would produce unacceptably high losses if allowed to propagate as far downstream as enclosure NE8. To prevent this, primary collimators set at ~ 0.1 mRadians are positioned in enclosure G2 and NW1 where the beam is still 1.5 km from the detectors.

The design of enclosure NLA allows the proton beam to be targetted at zero degrees. A change in the targeting angle would involve switching the beam into a different beam pipe connecting NE8 and NLA (see Figure 3) and moving the magnets in NLA laterally a distance of up to nine feet (see Figure 4). In subsequent years, other targeting angles might be required. In anticipation of this requirement, a second beam pipe will be installed between enclosures NE8 and NLA. However, a necessary switching enclosure (NL9), that would be required will not be built until the need arises to do so.

Primary Target and Experimental Hall

The NLB target is designed to accept proton intensities of up to 2.5 x 10^{13} in a millisecond spill. Successful operation of such a target involves solving two major problems. The first is the problem of dumping ~ 2 Megajoules of energy, (50% of the beam energy) in the target material without local cracking or melting. The second is the handling of the highly radioactive target material in case it needs to be repaired or removed from the Lepton Hall (NLB). These problems will be treated in turn.

Figure 5 shows the peak energy deposited per gram in tungsten by 1 TeV protons as predicted by the monte-carlo program CASIM[4] for beams of various sizes. The two solid curves refer to the scale on the right and show the maximum number of 1 TeV protons that can be targetted while keeping the energy deposition below 200 Joules/gram (upper curve) and 100 Joules/gram (lower curve). It is generally considered[5] that metallic materials can absorb 100 Joules/gram without suffering internal damage. In tungsten, such an energy deposition produces a temperature rise of ~ 750^0c, keeping the material well below its melting point.

To keep the energy deposition below 100 Joules/gram requires a full-width beam-size[6] (at the target) of at least 4.3 inches. The beam has been designed to be capable of producing a spot size of 7 inches, which easily satisfies the above criterion. The problem of energy deposition in copper is much less severe than in tungsten.

In order to allow experiments to separate the effects of prompt neutrinos and neutrinos from the π and K decays, targets are planned at full and 1/3 density. A list of targets and their sizes is given in Table 1. Changing between full and 1/3 density can be accomplished with the tungsten or copper target in a matter of minutes; the changeover between full and 1/3 density beryllium would be a complex procedure requiring several days. For the initial installation, only the full density copper target will be bought.

Based on measurements made on the E-613 target[7], the radiation level at the upstream face of the target will be 25000 Rads/hour after an exposure of 10^{18} 1 TeV protons. A one week cool down will reduce this to 5000 Rads/hr. which still presents a formidable handling problem. The target will be placed in a 'coffin' of steel with 12" thick walls for all handling. Figure 6 shows a cross-section of the target housing and Appendix D describes the remote handling procedures used to remove the target and place it in its 'coffin'. Radiation levels outside the coffin will be lower than 100 mrem/hour.

The Pre-target Hall and the Target Hall serve two functions; they contain the final string of magnets which transport the proton beam to the target, as well as contain contain the target. To allow the proton beam to hit the target at both 0 mRadians and 40 mRadians requires the upstream section to be at least 12 ft. wide (see Figure 4). The downstream section of the hall contains the target system and the rails used for target installation and removal. Figure 7 shows a plan view of Enclosure NLA and the railway which is used to service the prompt target.

Muon Spoiler System (Active Shield)

The muon spoiler system is designed to sweep the intense flux of muons associated with the prompt neutrino beam away from the neutrino detectors. It is the subject of a lengthy and detailed report (Appendix C), of which only a summary and update are given here.

The spoiler system must reduce the muon flux at the 15' Bubble Chamber to less than 10 muons per 10^{13} protons on the target. To calculate this flux, monte-carlo programs have been written which consider muons from direct production (charm decay), muon production by π and K decay, and from muon-trident production. Muons are propagated through the spoiler system using detailed field maps of the proposed spoiler magnets, and including the effects of energy loss, multiple, plural and single Coulomb scattering, and deep inelastic muon scattering. Three completely independent programs, each with its own treatment of these physical processes and its own monte-carlo techniques, have been written by the proponents of E-636, E-646 and E-656. Their predictions for the muon

flux at the 15' Bubble Chamber agree to better than a factor of 2, which is quite satisfactory considering that the overall rejection being calculated is about 10^9. The programs have also been tested using data on muon backgrounds measured by E-613. The predicted and measured fluxes agree well, typically to better than 50%. More details on all of the above can be found in Appendix C.

In the design study of 1982 (see Appendix C), an acceptable solution was found for 1000 GeV protons consisting of two solid-iron electromagnets and four air-core C-magnets. In the redesign for 900 GeV incident protons during the summer of 1984, it was found that simply omitting the fourth air-core C-magnet gave an acceptable 900 GeV solution, that is, less than 10 muons at the 15' Bubble Chamber per 10^{13} protons on the target. This solution was analyzed by one of the three monte-carlo programs (E-636), and the results were presented at the Direct Neutral Lepton Workshop in October, 1984[8]. This constitutes an acceptable solution that will be further optimized to minimize the magnet costs. The proposed spoiler system is shown in Figures 8 through 13. The system has a total field integral ($\int Bdl$) of 54 Tesla-Meters, giving a P_T kick 16 GeV/c. The magnetic field is horizontal and the muons are swept vertically into the ground and into the sky (see Section II).

The first two magnets are conventional iron magnets with a central field of 2 Tesla and an overall $\int Bdl$ of 18 Tesla-Meters. Apart from their function as magnets, they also serve to shield the experiments and personnel from strongly interacting particles produced in the target, most especially neutrons (see Section III). The C-magnets each have a central field of 2 Tesla and total 18 meters in length. The gaps between the pole tips gradually increase in order to match the width of the muon cone. As stated previously, these magnets must be air-gap magnets, in order to prevent trident production and deep inelastic scattering by the muons. An important feature of the design is that the iron yoke which carries the major part of the return field and which would tend to bend particles back towards the detector is withdrawn several meters from the gap.

References

1. The Fermilab Physics Advisory Committee consists of a panel of high energy physicists appointed by the director, to advise of the physics merit of experimental proposals submitted to the Laboratory.

2. Copies of Trnsparencies of the Direct Neutral Lepton Facility Workshop, October 12, 1984, Fermilab Users Office (1984).

3. A. Malensek and J. Morfin, Prompt Lepton Production from High-Energy Beam Dumps, Fermilab Tm-1275 (1985).

4. A. Van Ginneken and M. Awschalom, High Energy Particle Interactions in Large Targets, Fermilab (1975). We are indebted to C. Hojvat for producing this curve.

5. C. Hojvat, private communication.

6. The "full width" used here and in Figure 5 is 4.72 times the value of the parameter σ in the Gaussian model used for beam shapes. In our experience, this definition of "full width" includes all of the beam except the long, rather flat, tails (which are to be removed by collimators very early in the beam line).

7. Memo to Meson Department Head from the Meson Radiation Safety Officer, March 24, 1981.

8. S. Oh, ref. 7, p. 12-1.

Figure Captions

1. Thumbnail sketch of three kinds of neutrino beams.

2. Expected neutrino fluxes at the 15' Bubble Chamber from a seven-interaction-length copper beam dump, from ref. 3.

3. A schematic drawing of the primary proton beamline. The lateral scale is greatly magnified.

4. Schematic drawing of the beamline elements in Enclosure NLA, showing them in two configurations: (a) for 0 mRadian production angle (upper positions): (b) 40 mRadian production angle (lower positions).

5. Energy deposition for 1000 GeV protons in tungsten as a function of beam size. The "data points" are from the Monte Carlo program CASIM. The solid curves give the maximum number of protons allowed if one takes the maximum allowed energy density to be: (a) 200 J/gm; (b) 100 J/gm. For 900 GeV protons, these solid curves can be multiplied by 1.08.

6. A plan view of the target box and the first muon spoiler magnet, with four cross sections.

7. Plan view of the pre-target beamline enclosure and the target hall. The magnets are shown in the position for 20 mRadian production angle.

8. Plan and elevation views of the entire muon spoiler magnet system.

9.-13. Cross sections of each of the five muon spoiler magnets.

LEPTON PRODUCTION

A. EXISTING NEUTRINO

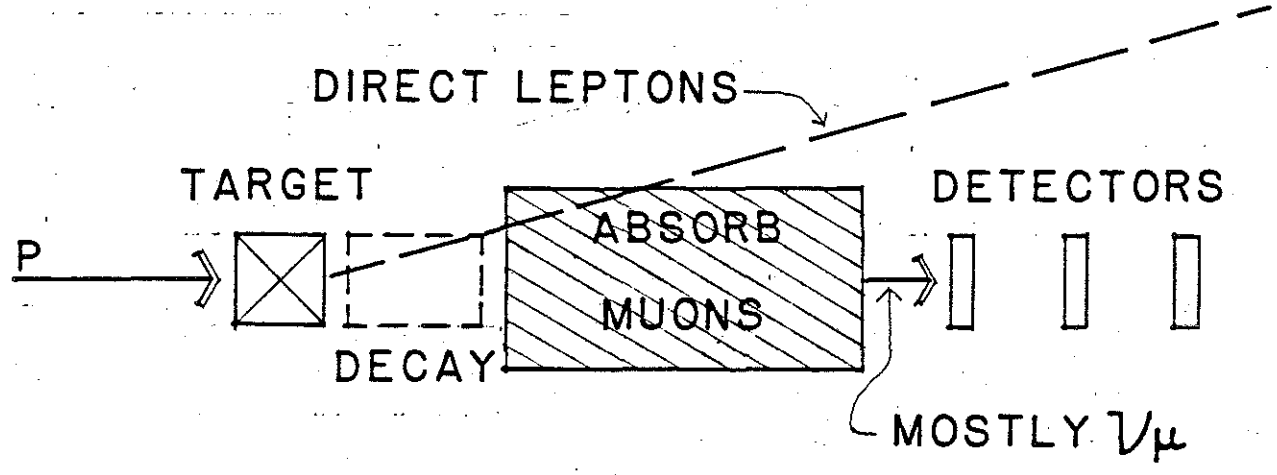

B. PASSIVE BEAM DUMP

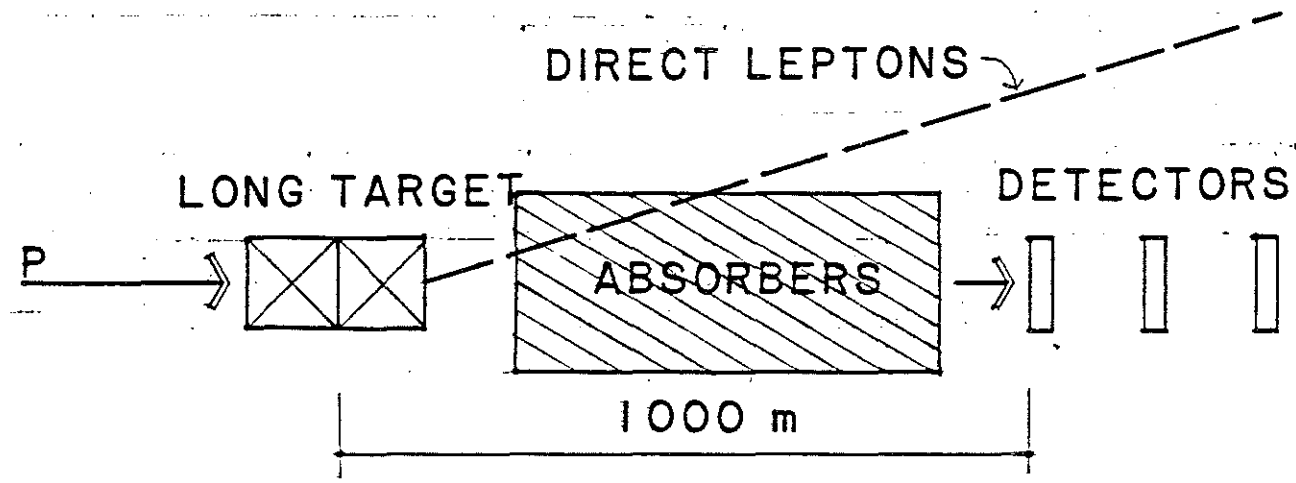

C. ACTIVE BEAM DUMP

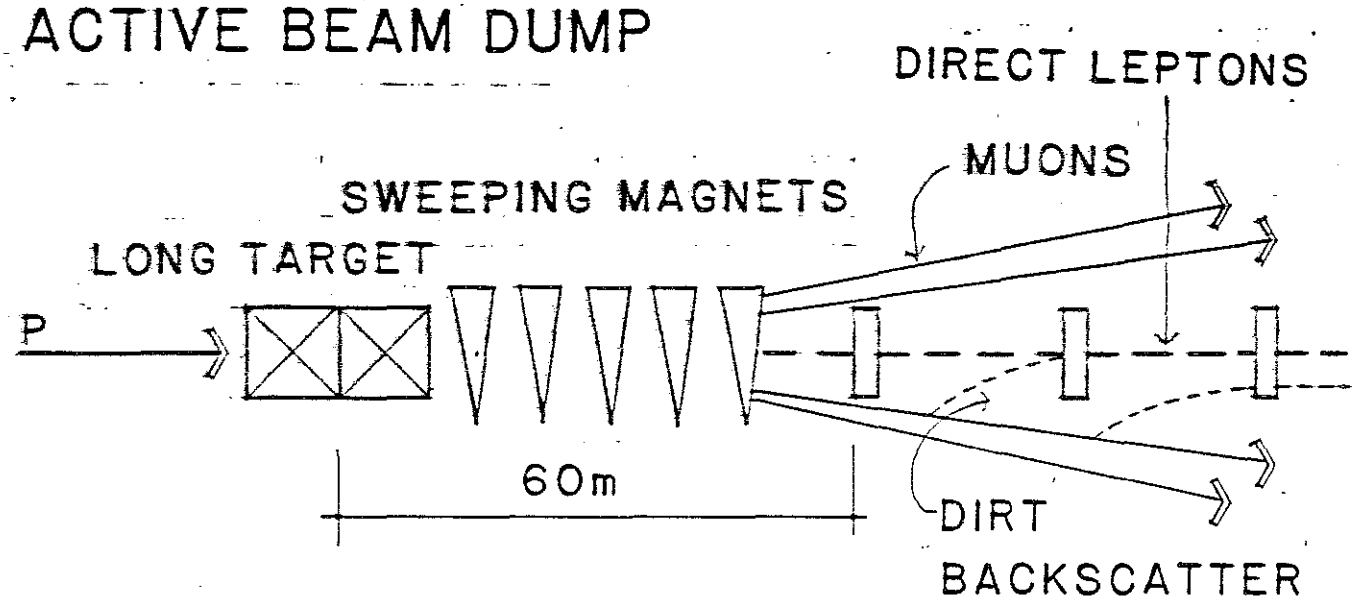

Figure 1

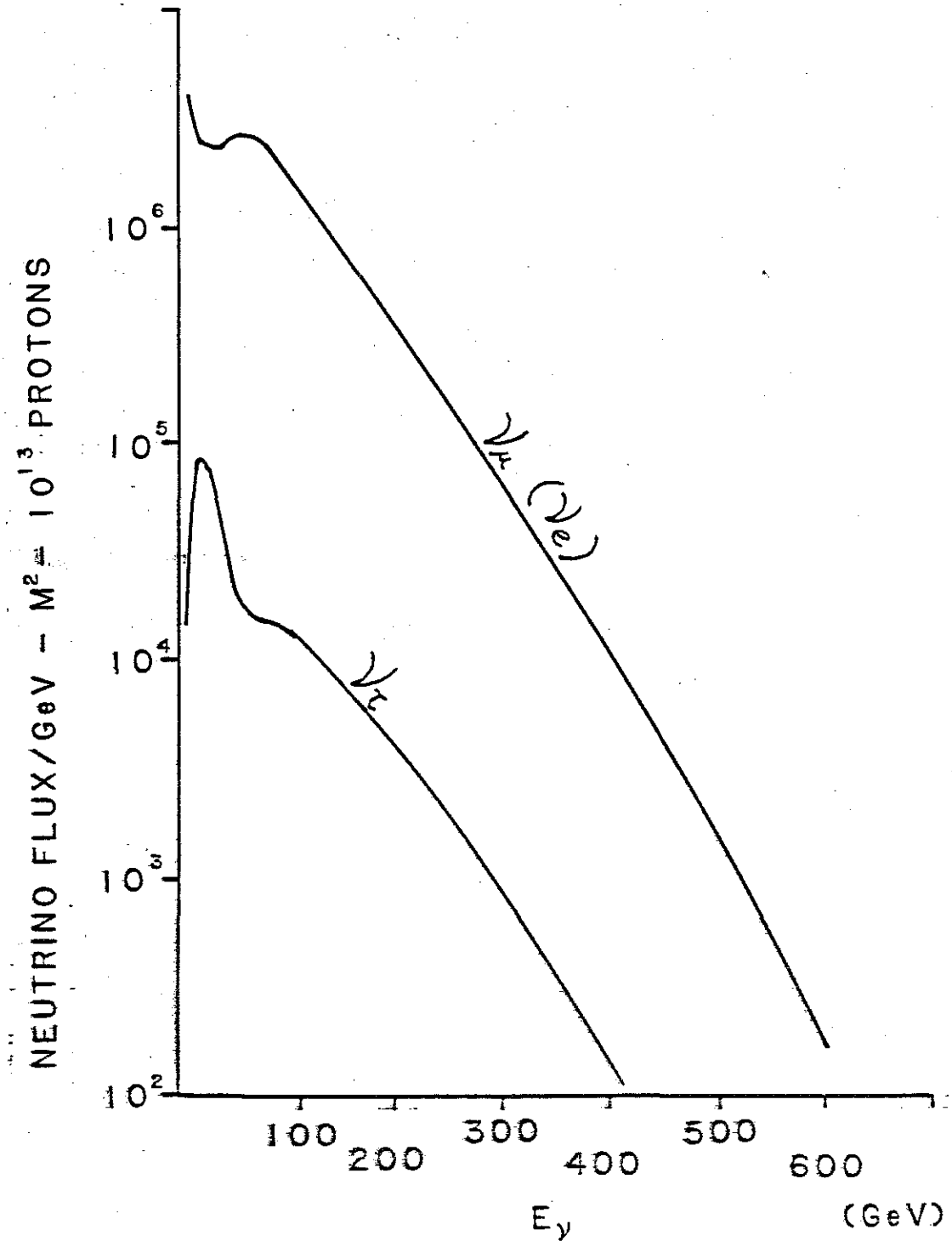
NEUTRINO FLUX/GeV - M² = 10¹³ PROTONS
10⁶
10⁵
10⁴
10³
10²
100
200
300
400
500
600
Eν
(GeV)
νμ (νe)
ντ

Figure 2

SCHEMATIC OF DIRECT NEUTRAL LEPTON PRIMARY BEAM
(DISTORTED SCALE)

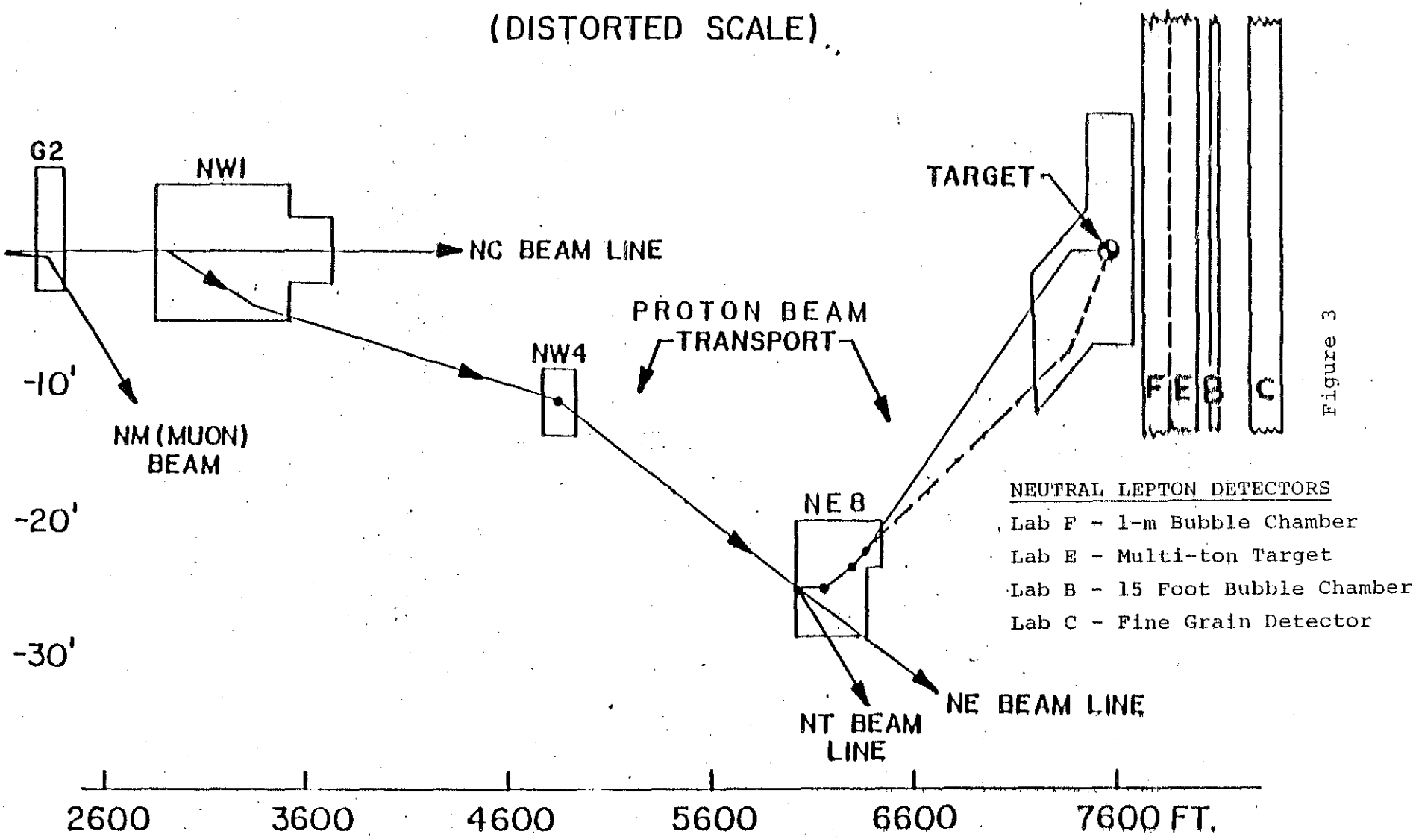

NEUTRAL LEPTON DETECTORS

Lab F - 1-m Bubble Chamber

Lab E - Multi-ton Target

Lab B - 15 Foot Bubble Chamber

Lab C - Fine Grain Detector

Figure 3

MAGNET ARRANGEMENT IN ENCLOSURE NLA FOR "0" & "40" MILLIRADIAN TARGETING

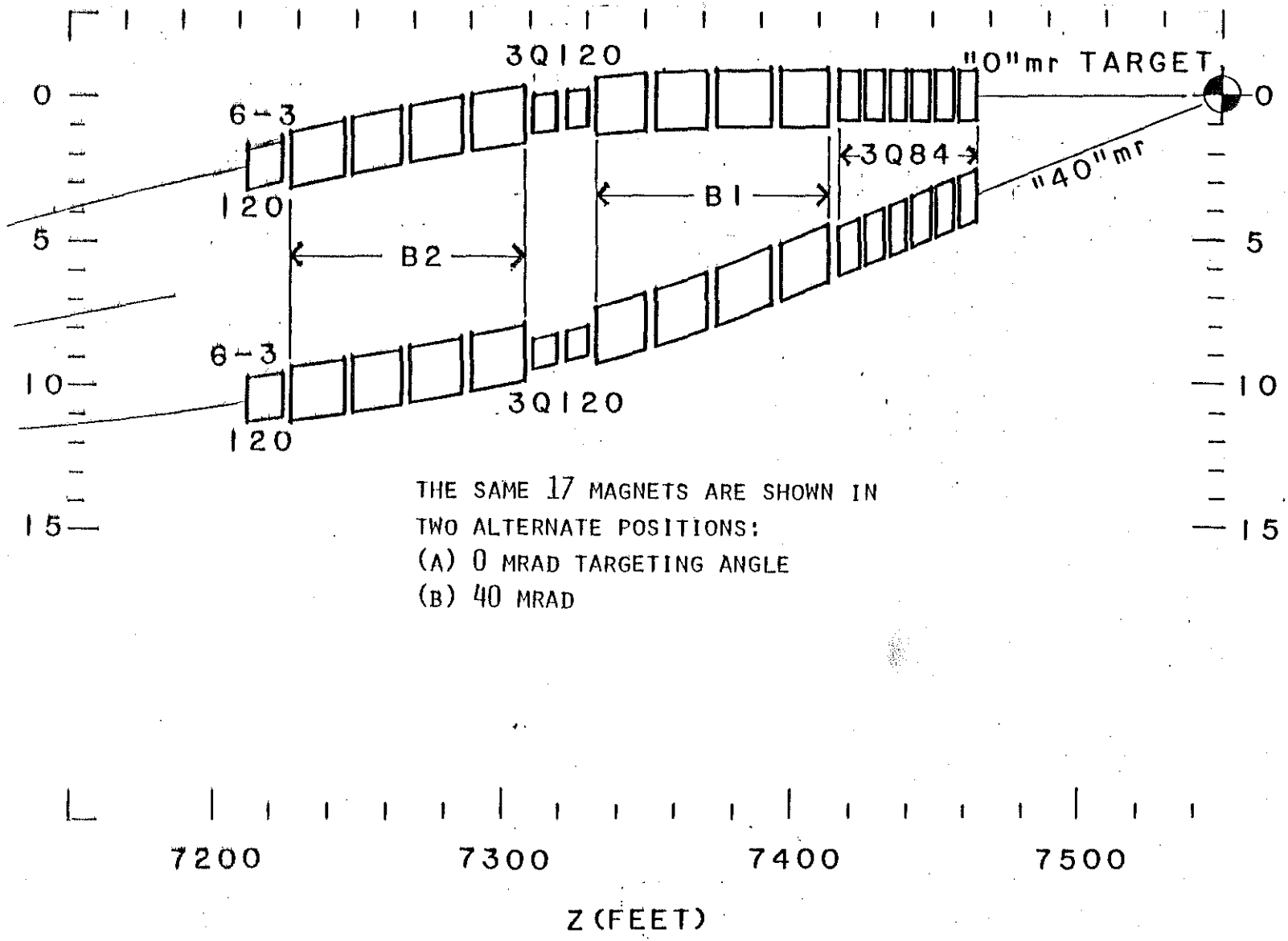

THE SAME 17 MAGNETS ARE SHOWN IN TWO ALTERNATE POSITIONS:
(A) 0 MRAD TARGETING ANGLE
(B) 40 MRAD

Figure 4

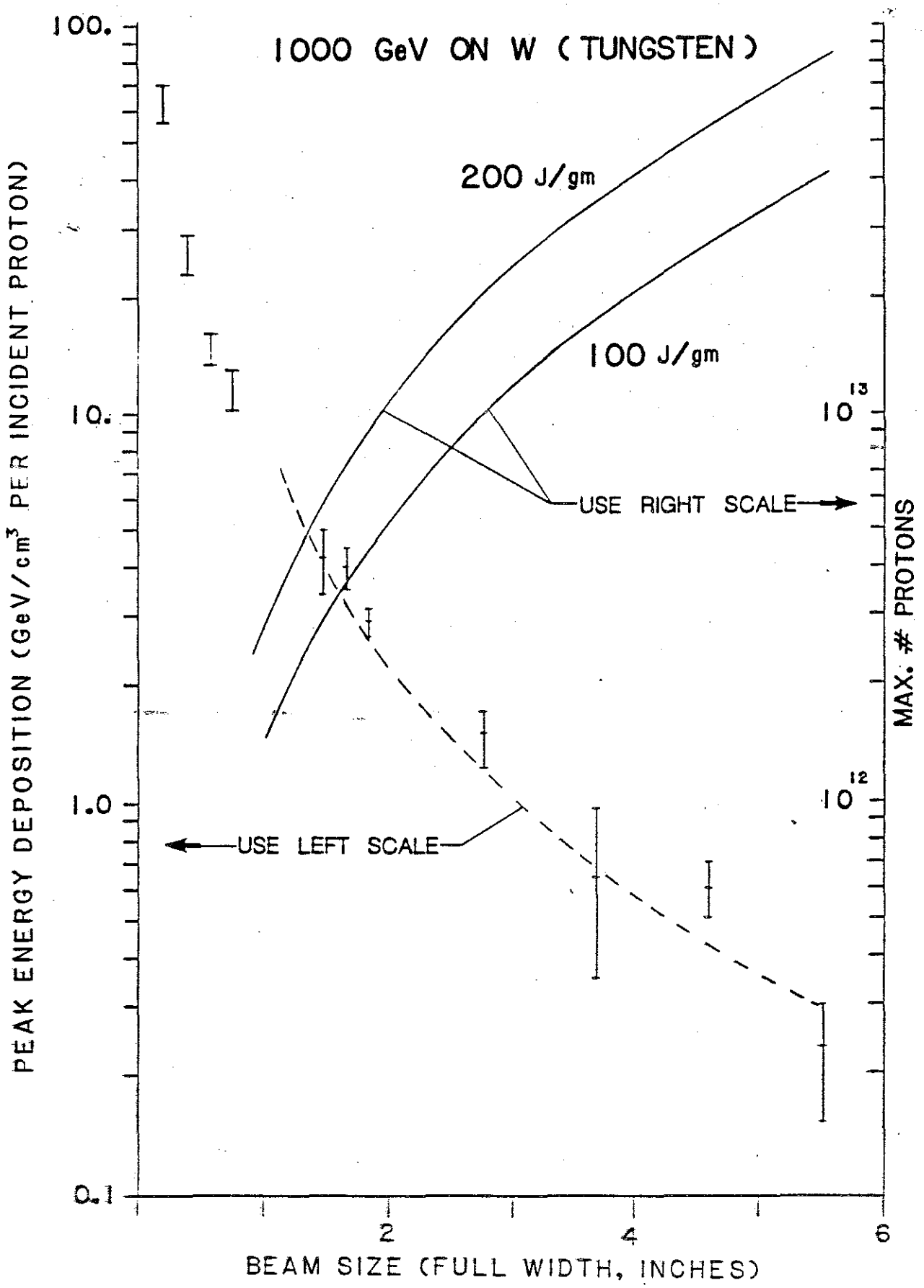
1000 GeV ON W (TUNGSTEN)
200 J/gm
100 J/gm
USE RIGHT SCALE
USE LEFT SCALE
PEAK ENERGY DEPOSITION (GeV/cm³ PER INCIDENT PROTON)
MAX. # PROTONS
BEAM SIZE (FULL WIDTH, INCHES)
100.
10.
1.0
0.1
10¹³
10¹²
2
4
6

Figure 5

CROSS – SECTIONS OF TARGET – SYSTEM

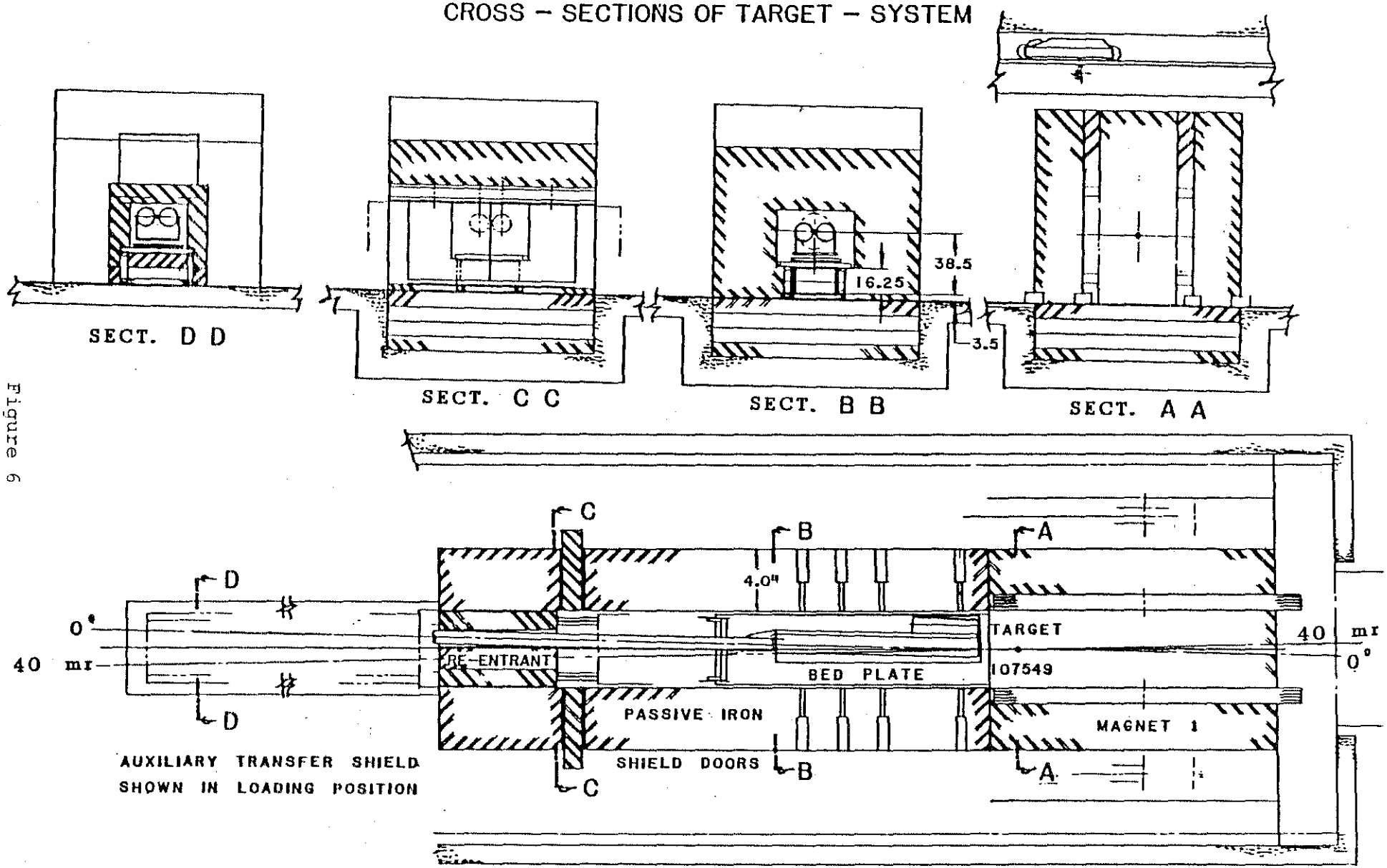

Figure 6

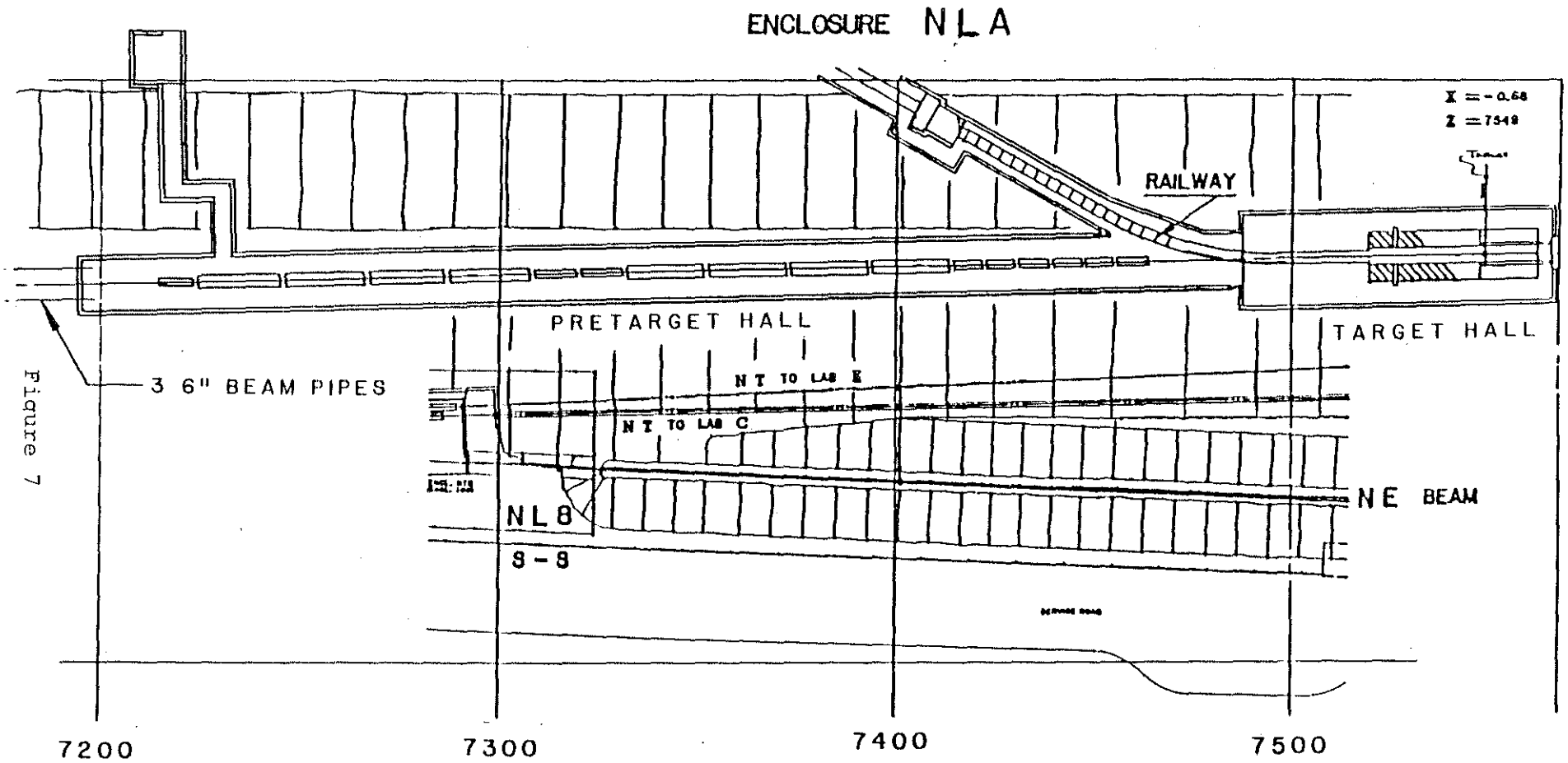
ENCLOSURE NLA
RAILWAY
PRETARGET HALL
TARGET HALL
3 6" BEAM PIPES
NT TO LAB E
NT TO LAB C
NE BEAM
NL8
S - S
7200
7300
7400
7500

Figure 7

MUON SPOILER SYSTEM

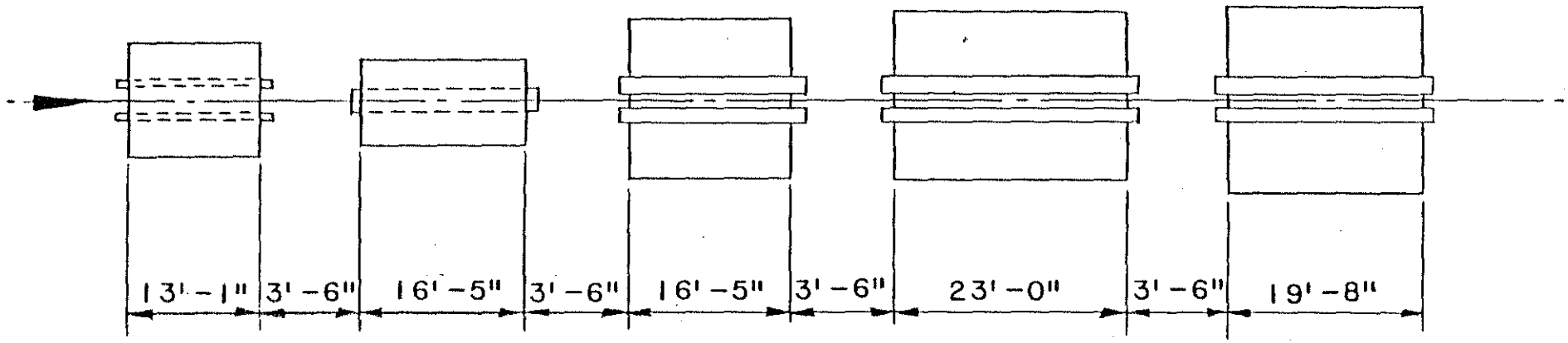

PLAN VIEW

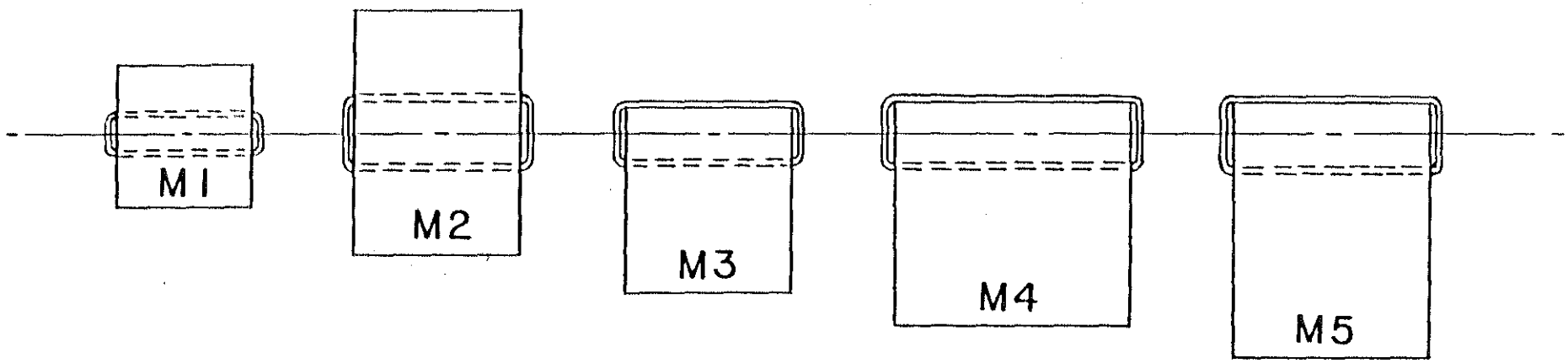

ELEVATION VIEW

Figure 8

M1
177" LONG

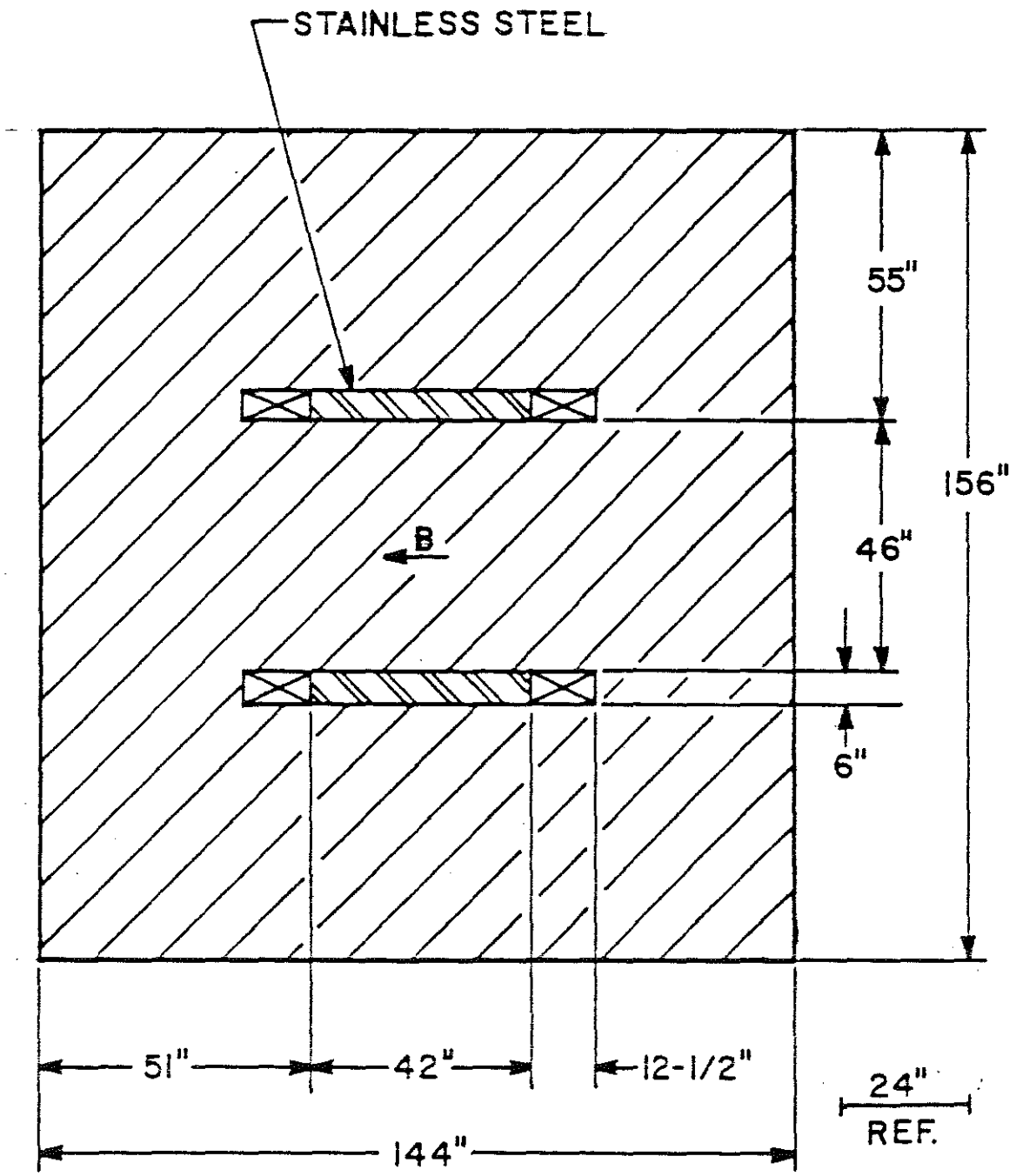

Figure 9

M4
275-1/2" LONG

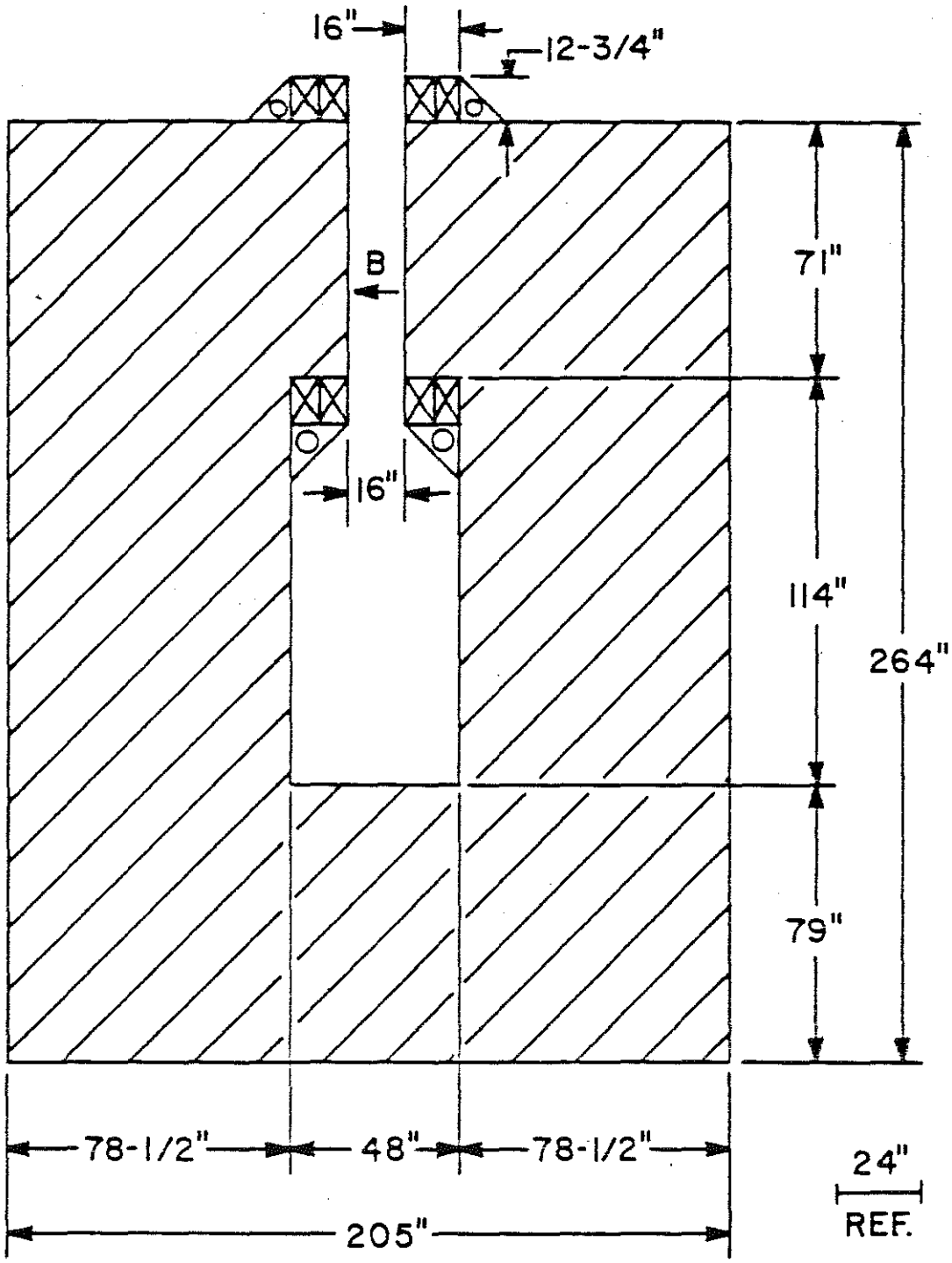

Figure 12

M5
236" LONG

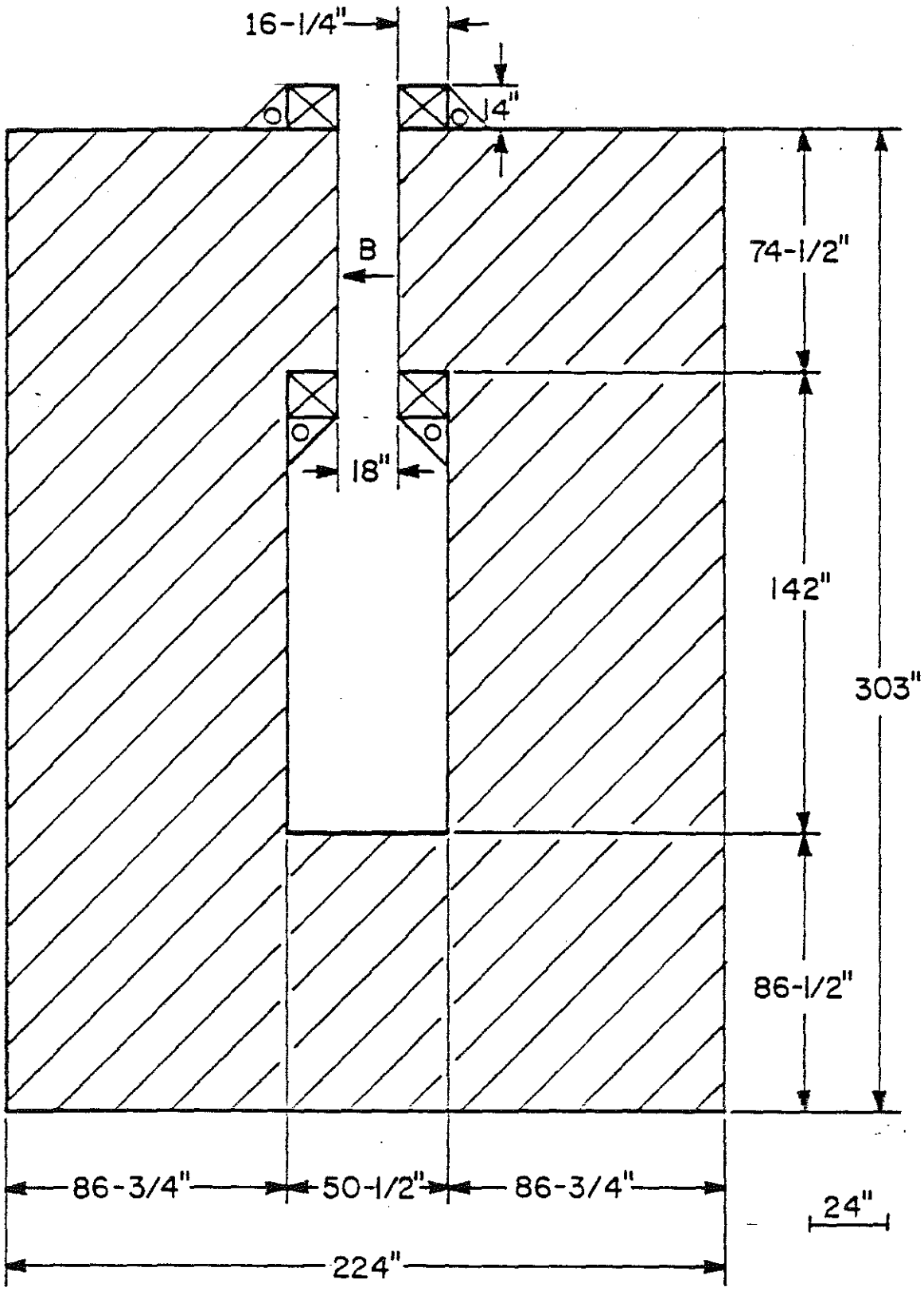

Figure 13

SCHEMATIC OF DIRECT NEUTRAL LEPTON PRIMARY BEAM
(DISTORTED SCALE)

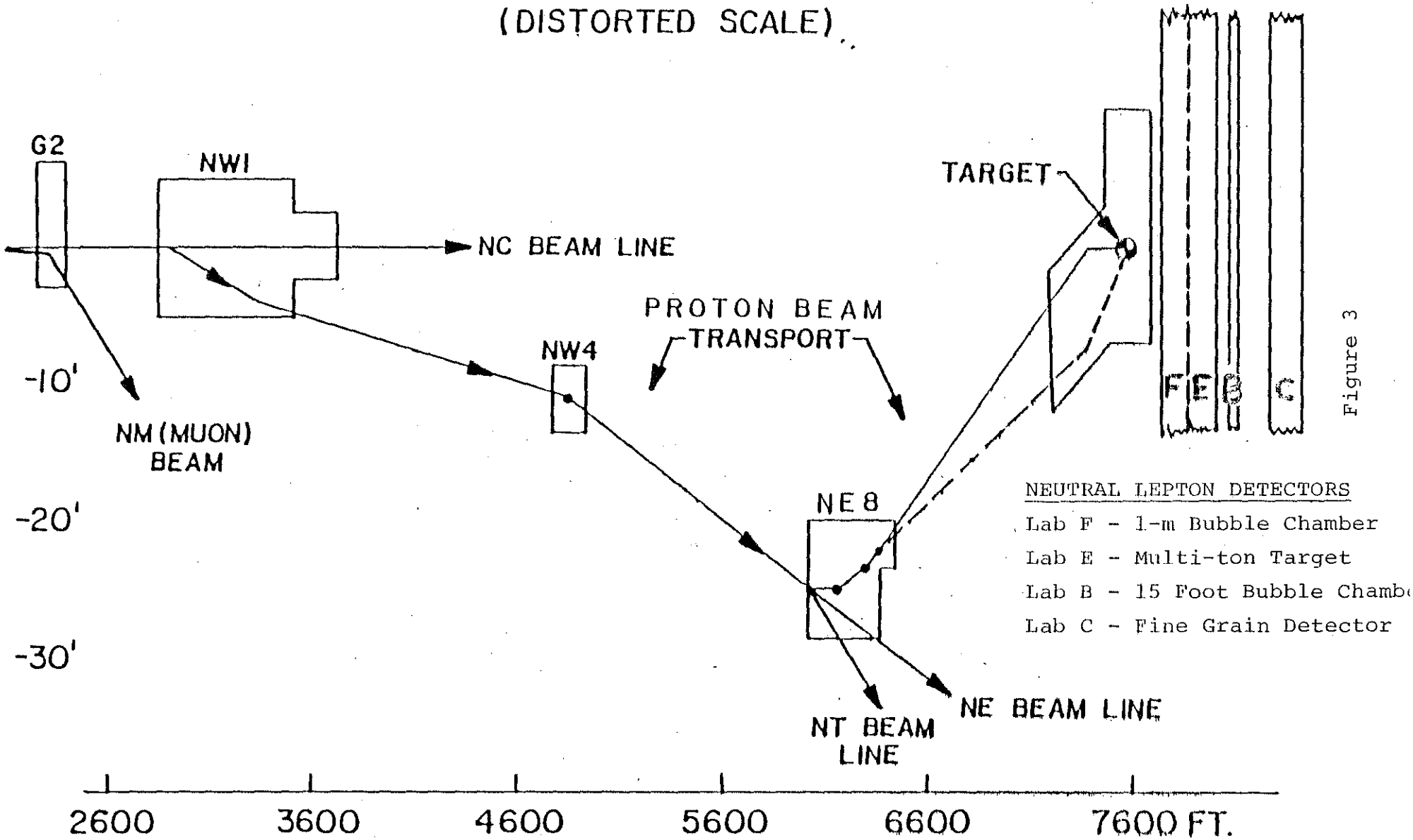

Figure 3

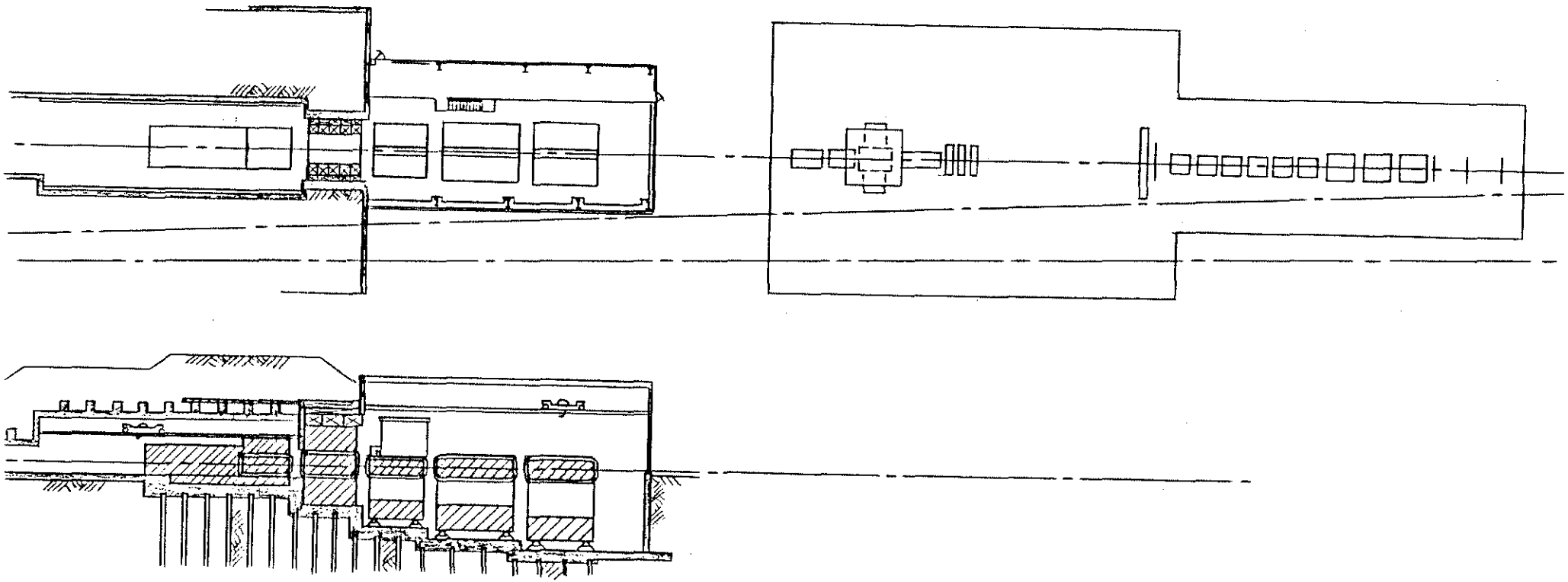

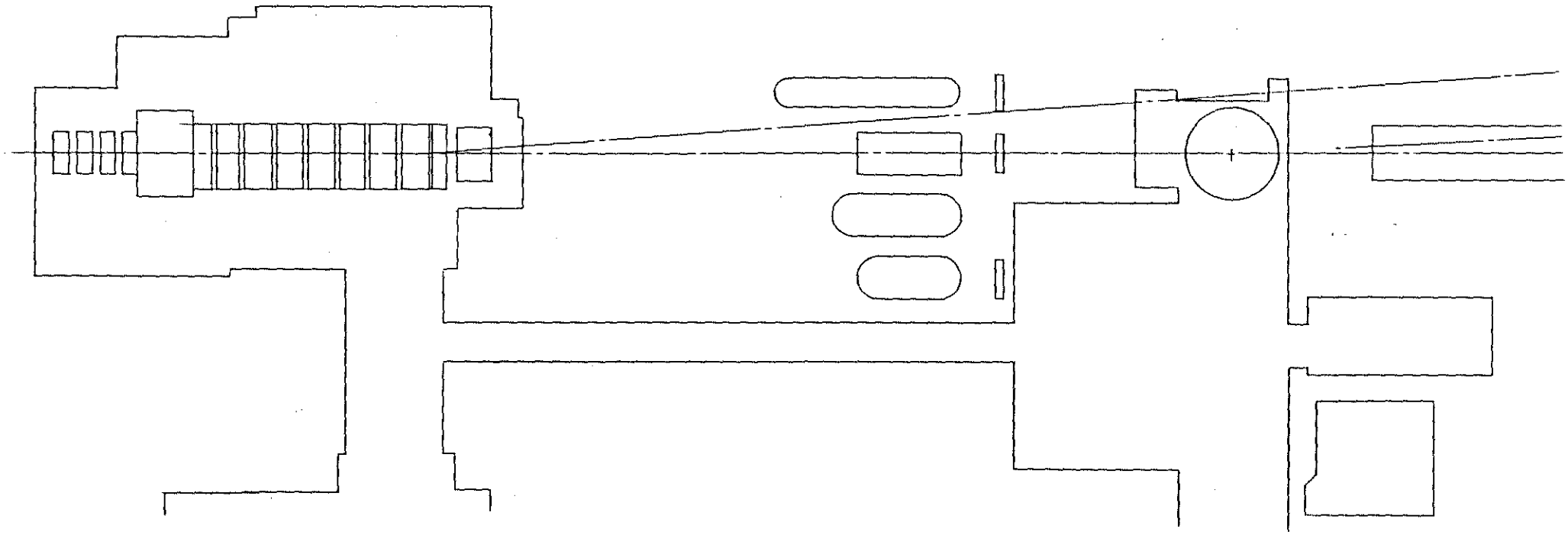

LEPTON PRODUCTION

A. EXISTING NEUTRINO

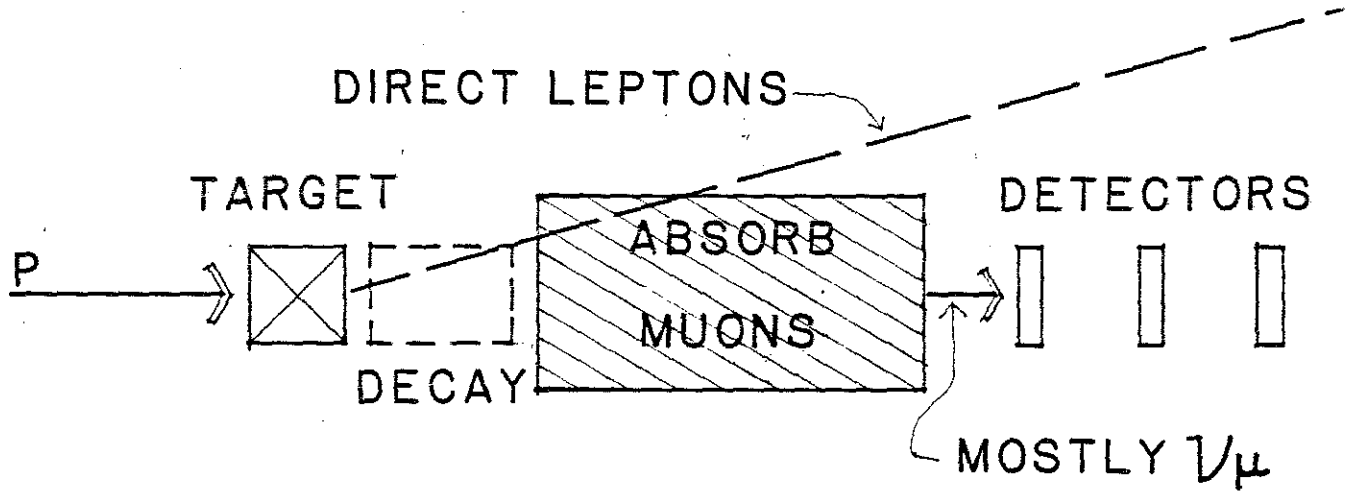

B. PASSIVE BEAM DUMP

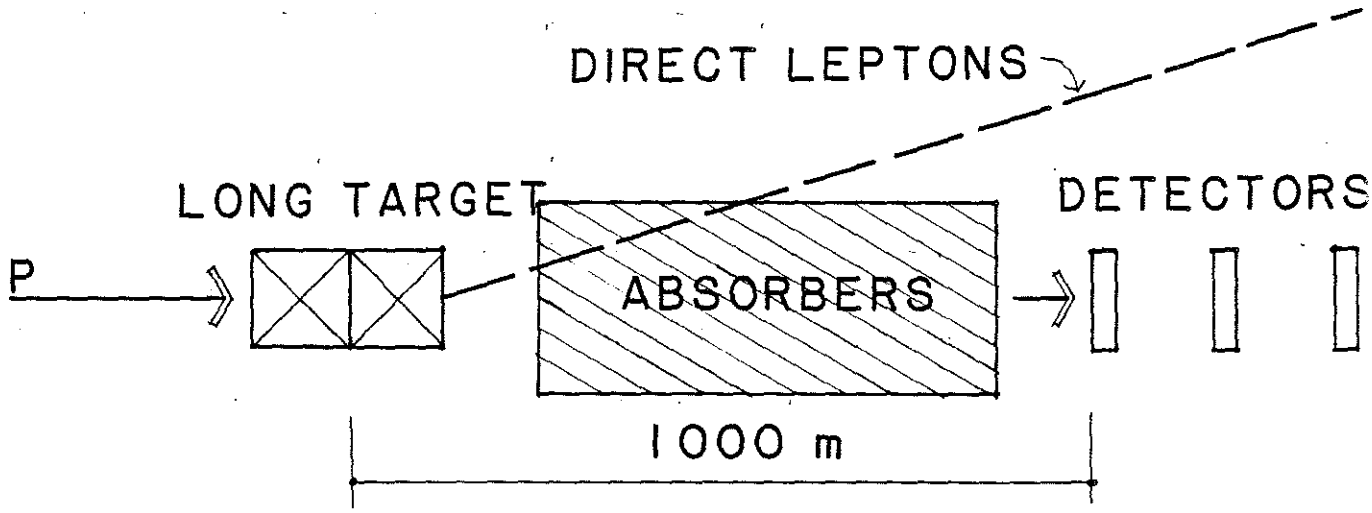

C. ACTIVE BEAM DUMP

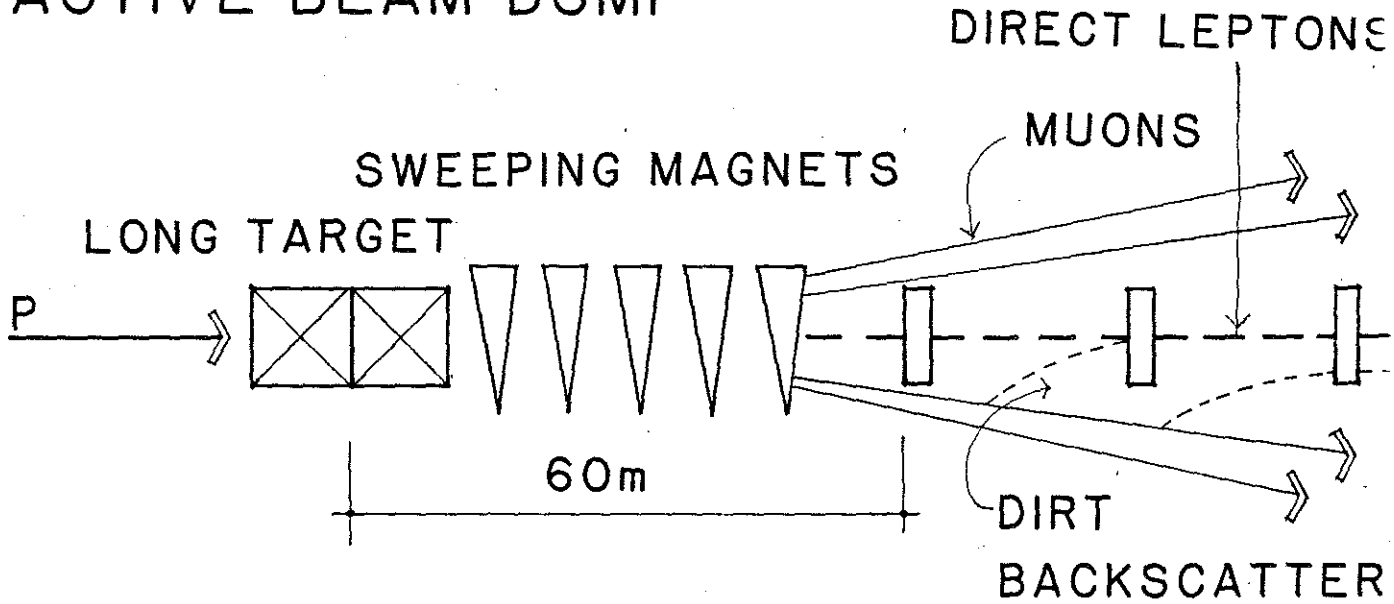

Figure 1

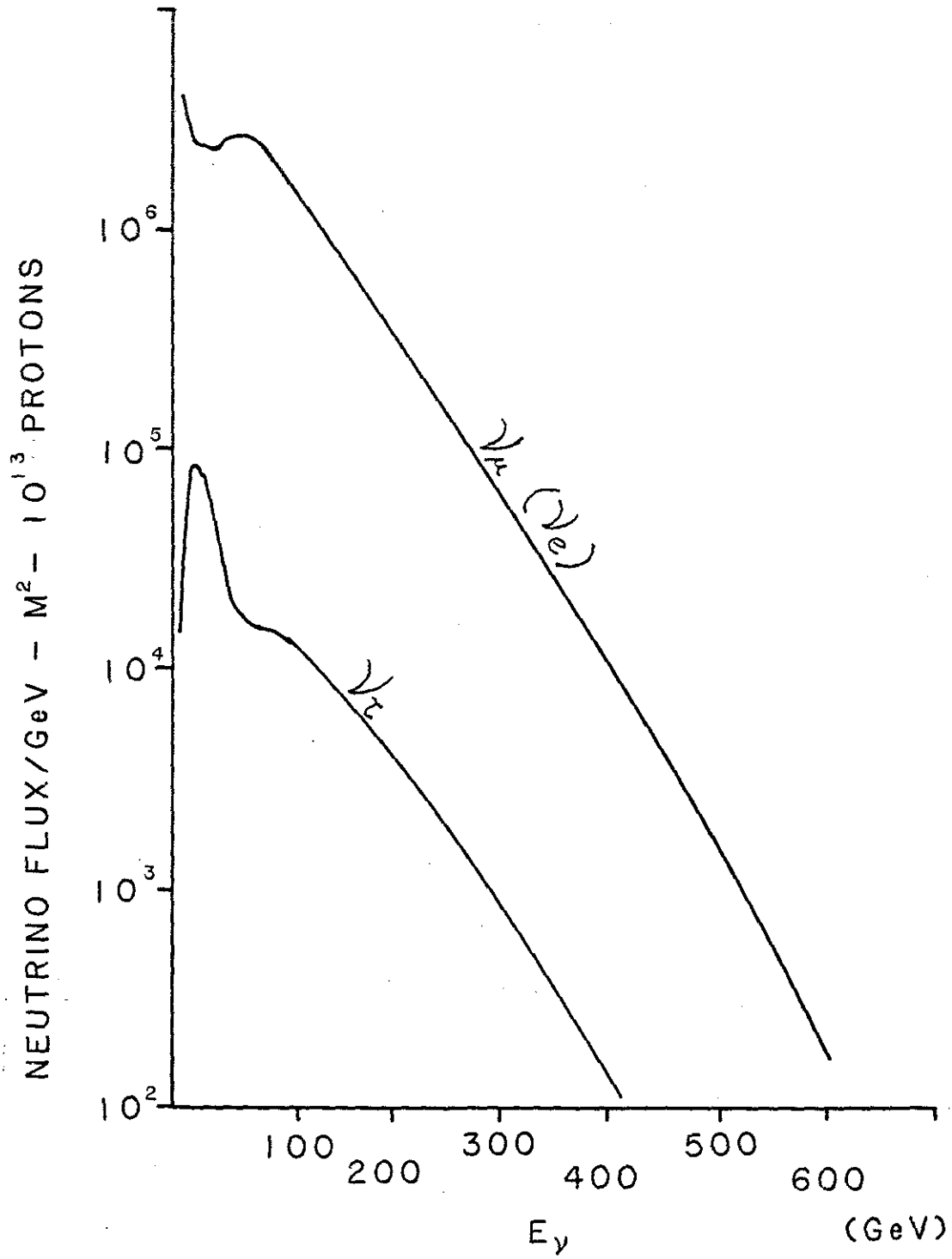
NEUTRINO FLUX/GeV - M² - 10¹³ PROTONS
10⁶
10⁵
10⁴
10³
10²
100
200
300
400
500
600
E_ν
(GeV)
ν_τ
ν_τ (ν_e)

Figure 2

MAGNET ARRANGEMENT IN ENCLOSURE NLA FOR "0" & "40" MILLIRADIAN TARGETING

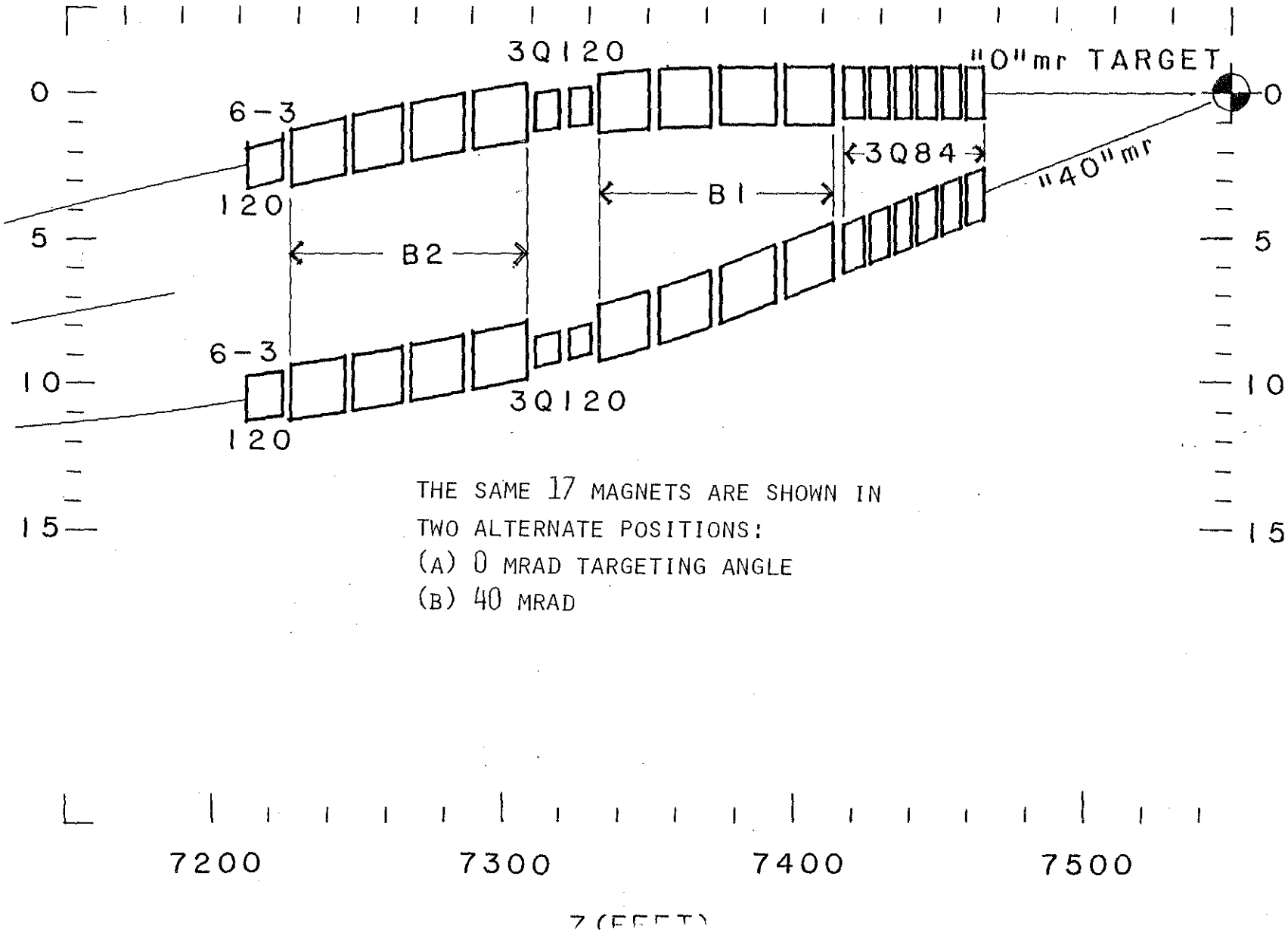

THE SAME 17 MAGNETS ARE SHOWN IN TWO ALTERNATE POSITIONS:

(A) 0 MRAD TARGETING ANGLE

(B) 40 MRAD

Figure 4

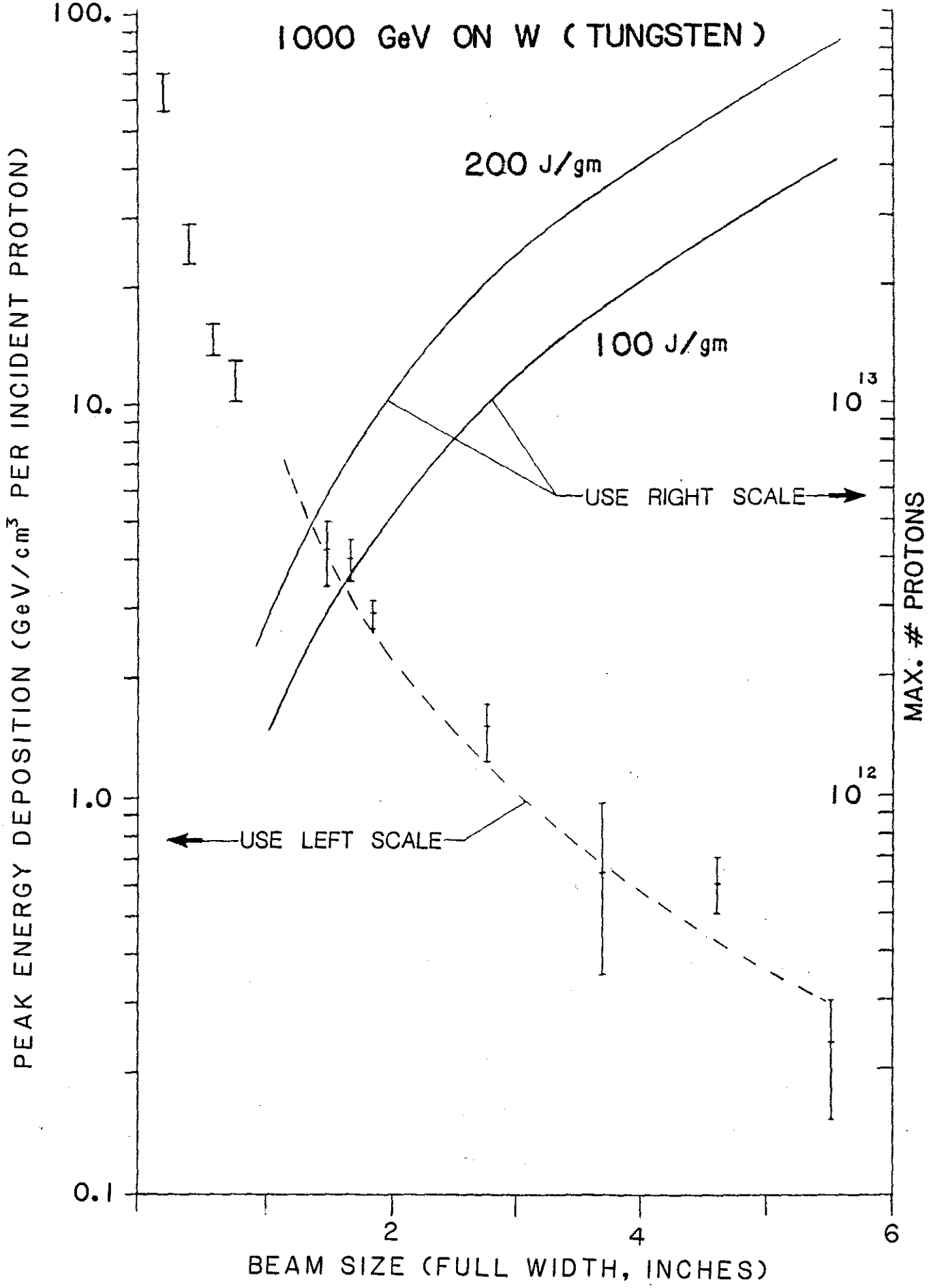
1000 GeV ON W (TUNGSTEN)
200 J/gm
100 J/gm
USE RIGHT SCALE
USE LEFT SCALE
PEAK ENERGY DEPOSITION (GeV/cm³ PER INCIDENT PROTON)
MAX. # PROTONS
BEAM SIZE (FULL WIDTH, INCHES)
100.
10.
1.0
0.1
10¹³
10¹²
2
4
6

Figure 5

CROSS – SECTIONS OF TARGET – SYSTEM

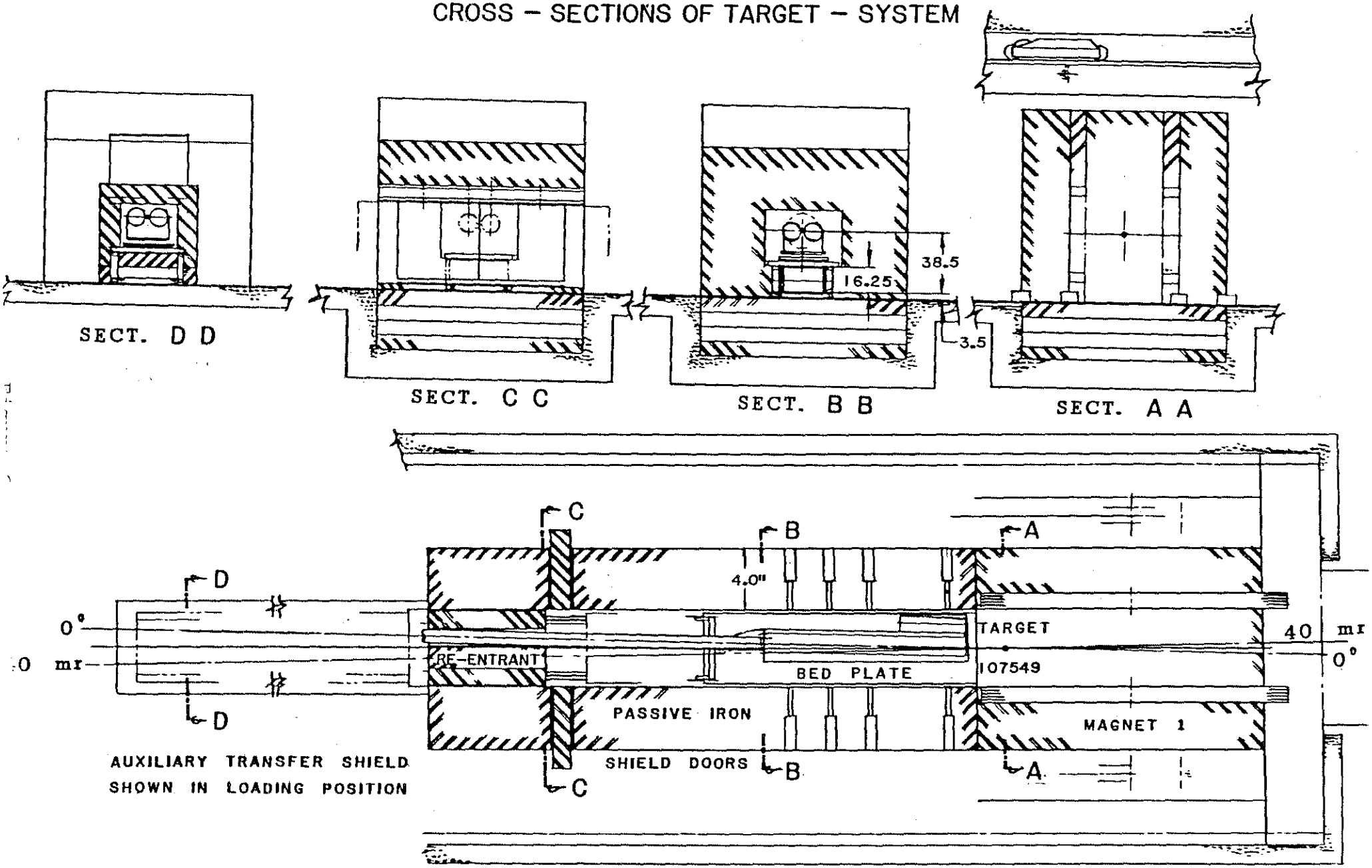

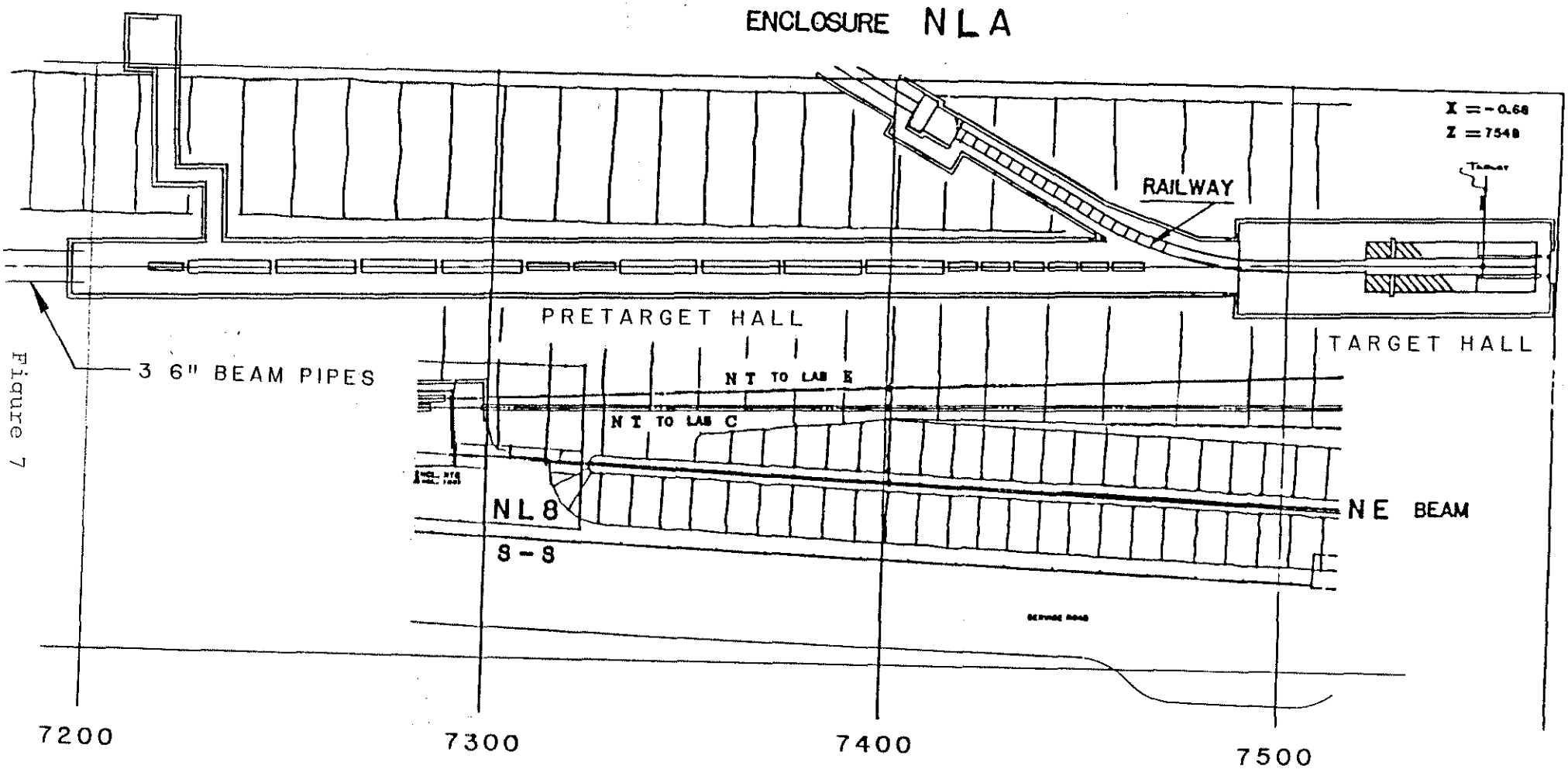
ENCLOSURE NLA
X = -0.68
Z = 7548
RAILWAY
PRETARGET HALL
TARGET HALL
3 6" BEAM PIPES
N T TO LAB E
N T TO LAB C
NL8
S - S
NE BEAM
7200
7300
7400
7500

Figure 7

MUON SPOILER SYSTEM

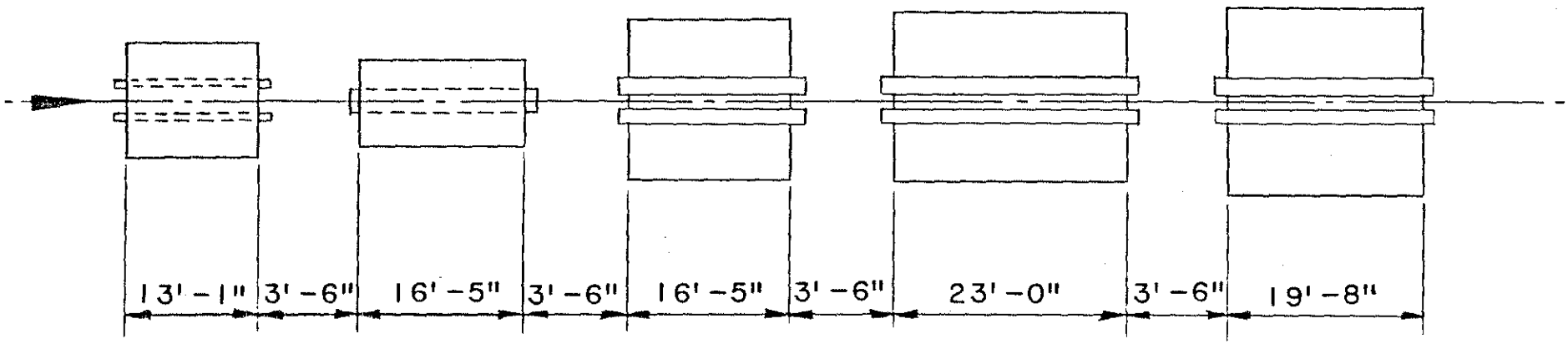

PLAN VIEW

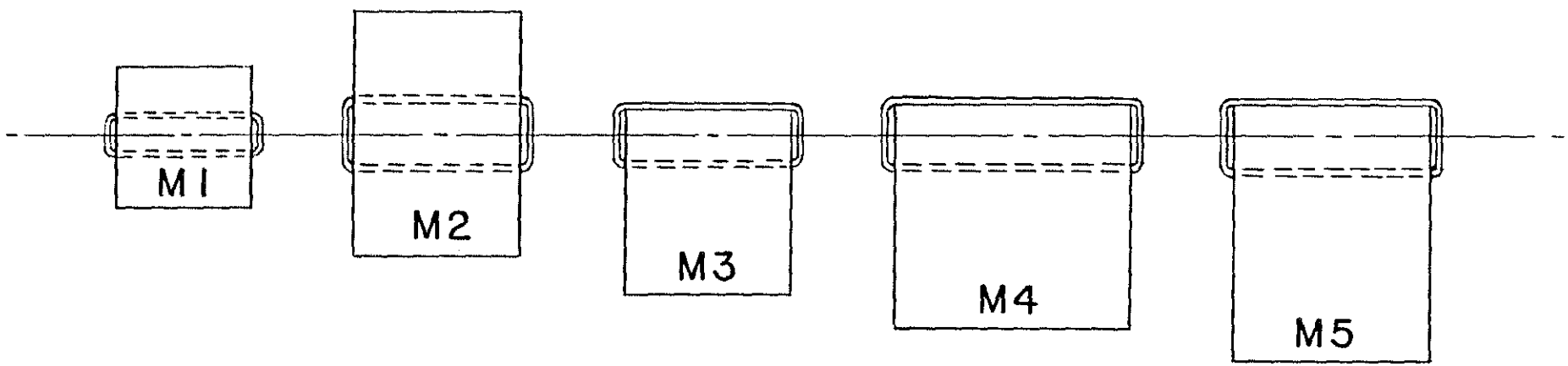

ELEVATION VIEW

Figure 8

M1

177" LONG

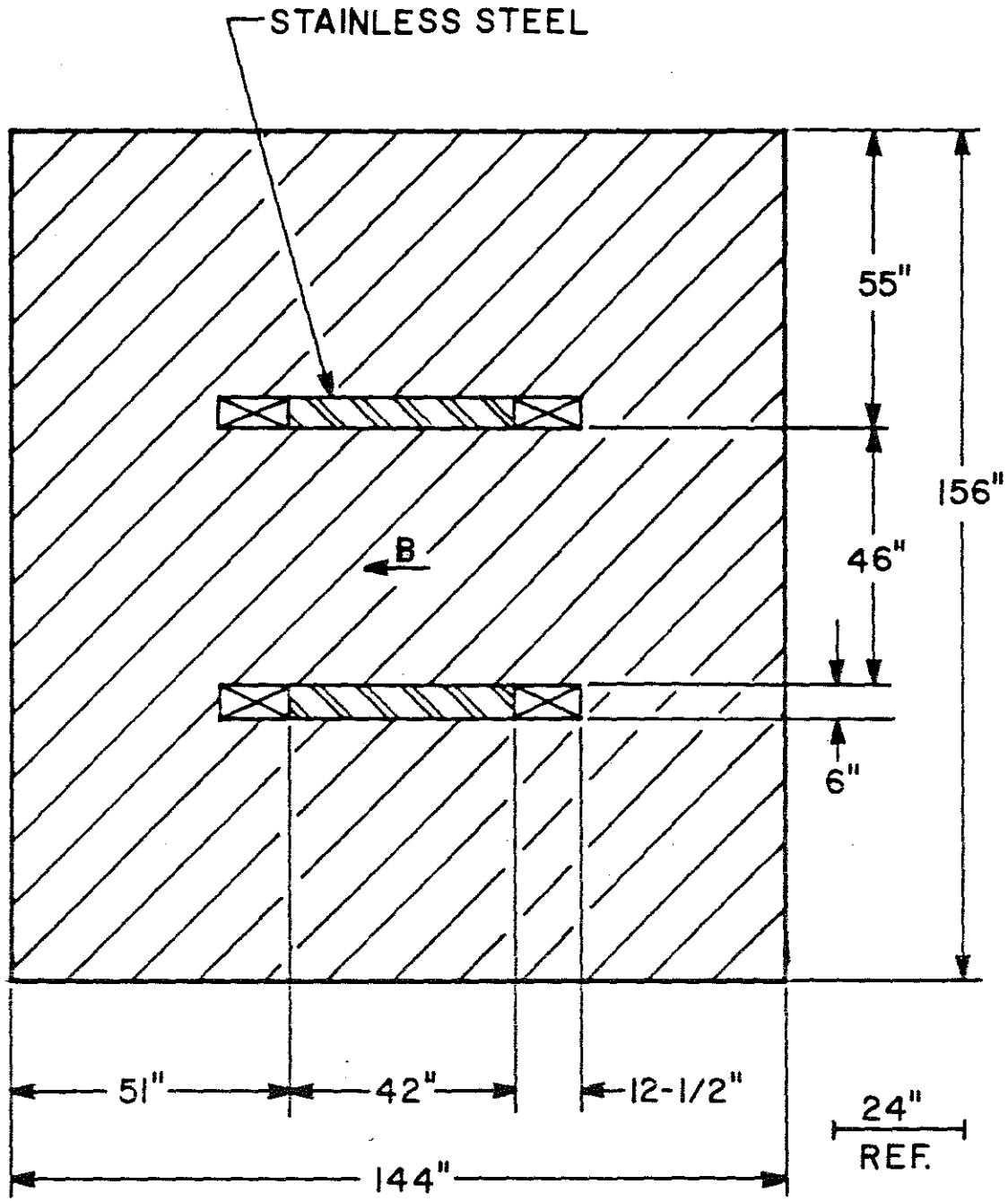

Figure 9

M2
197" LONG

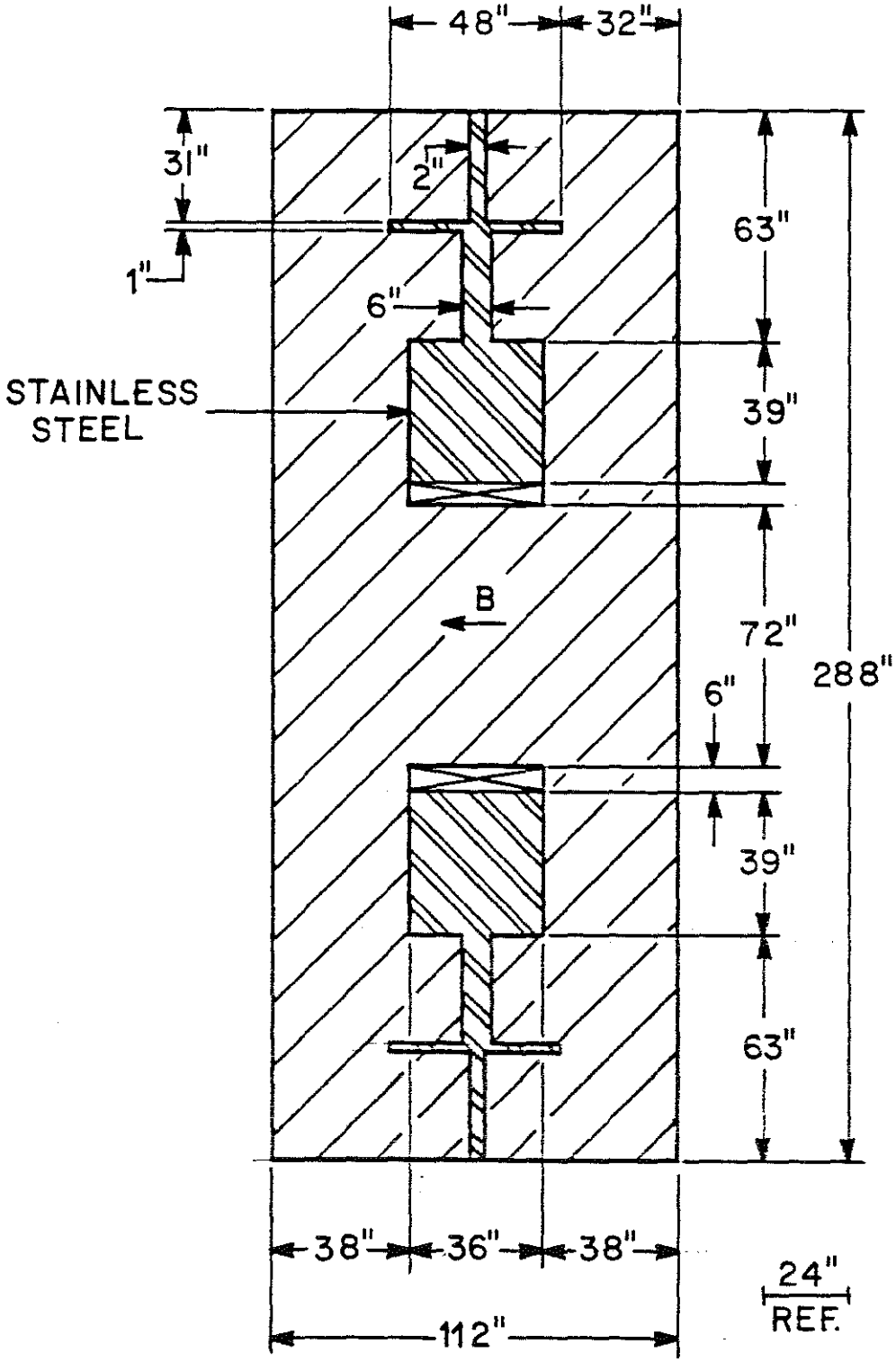

Figure 10

M 3
197" LONG

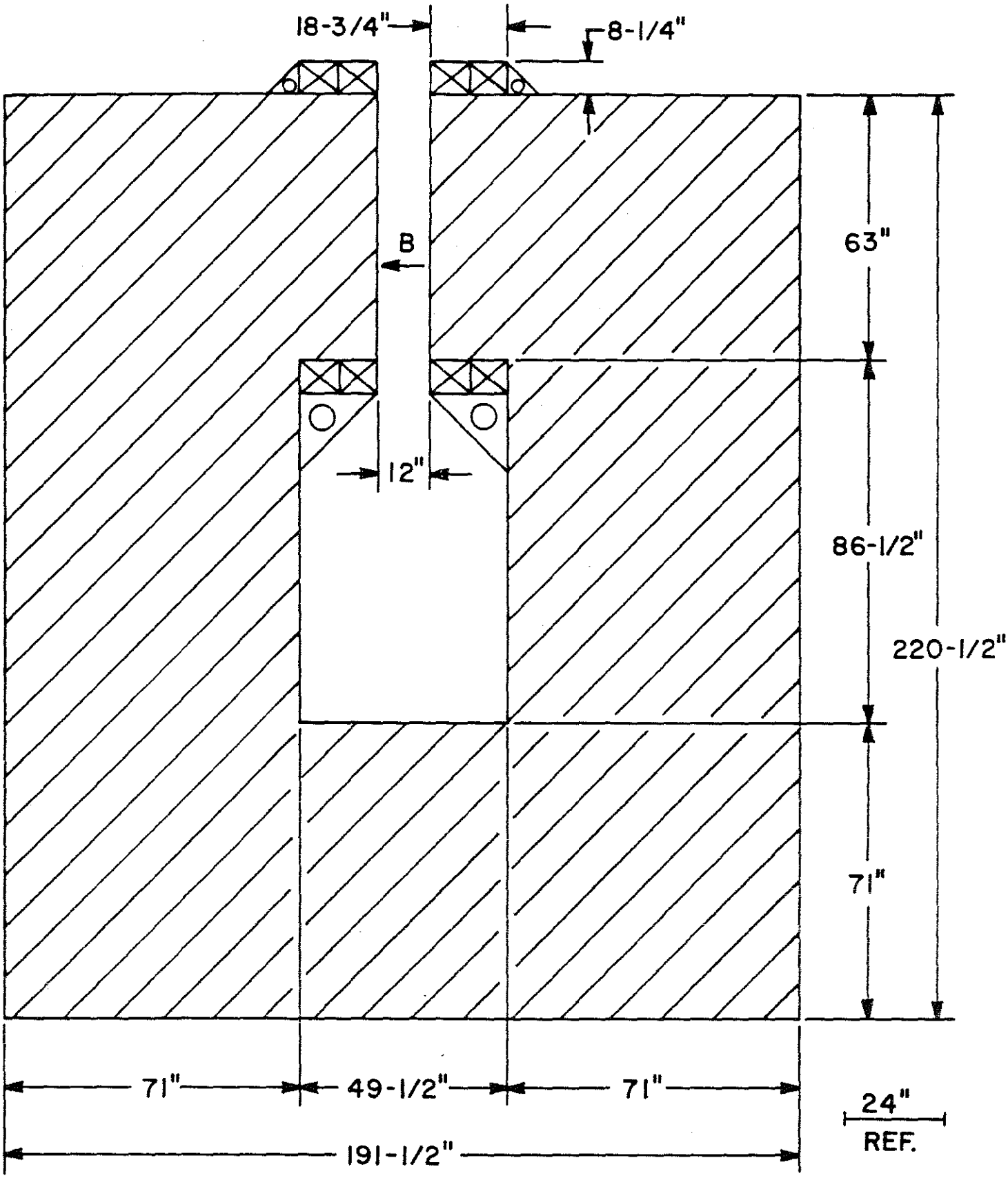

Figure 11

M4
275-1/2" LONG

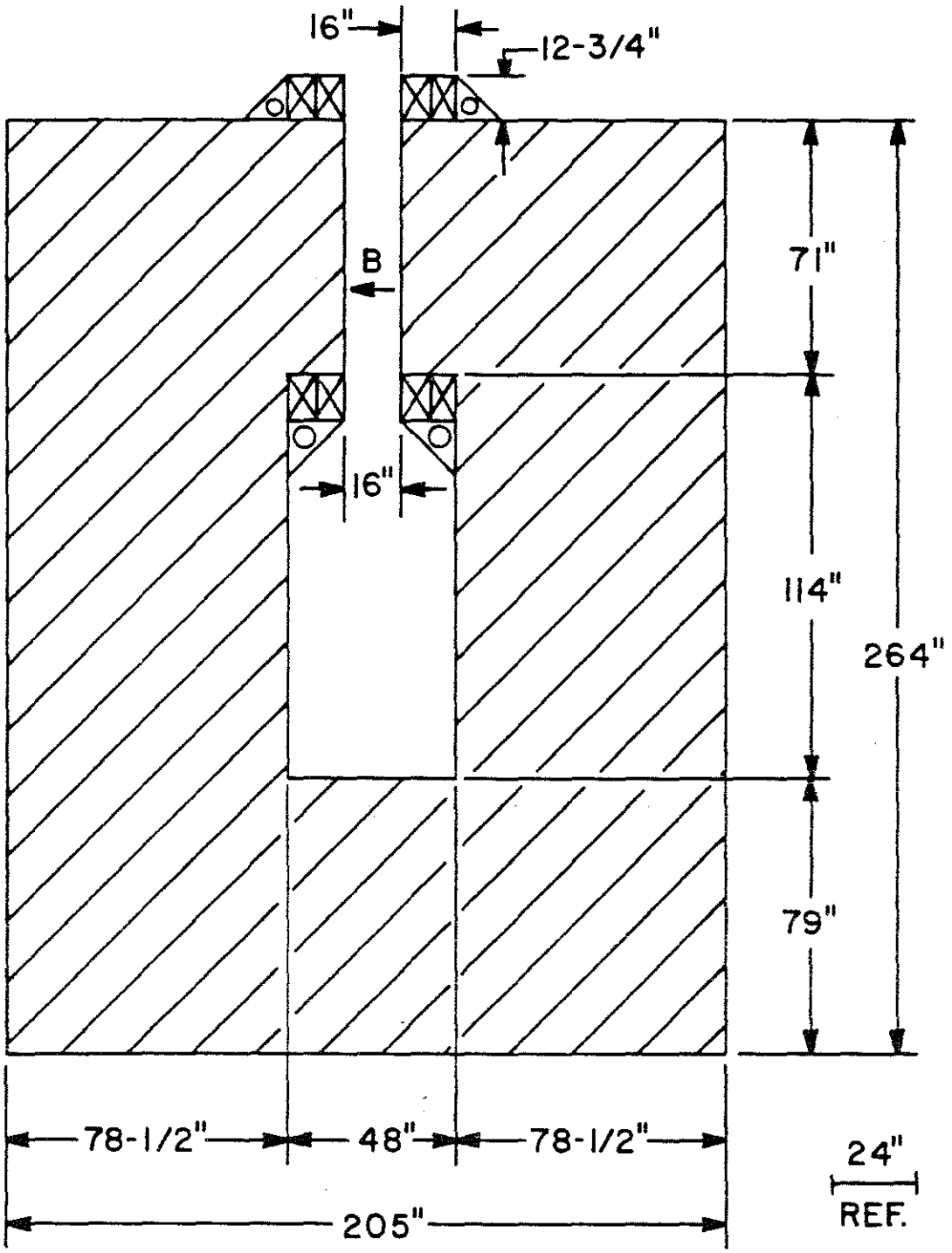

Figure 12

M5
236" LONG

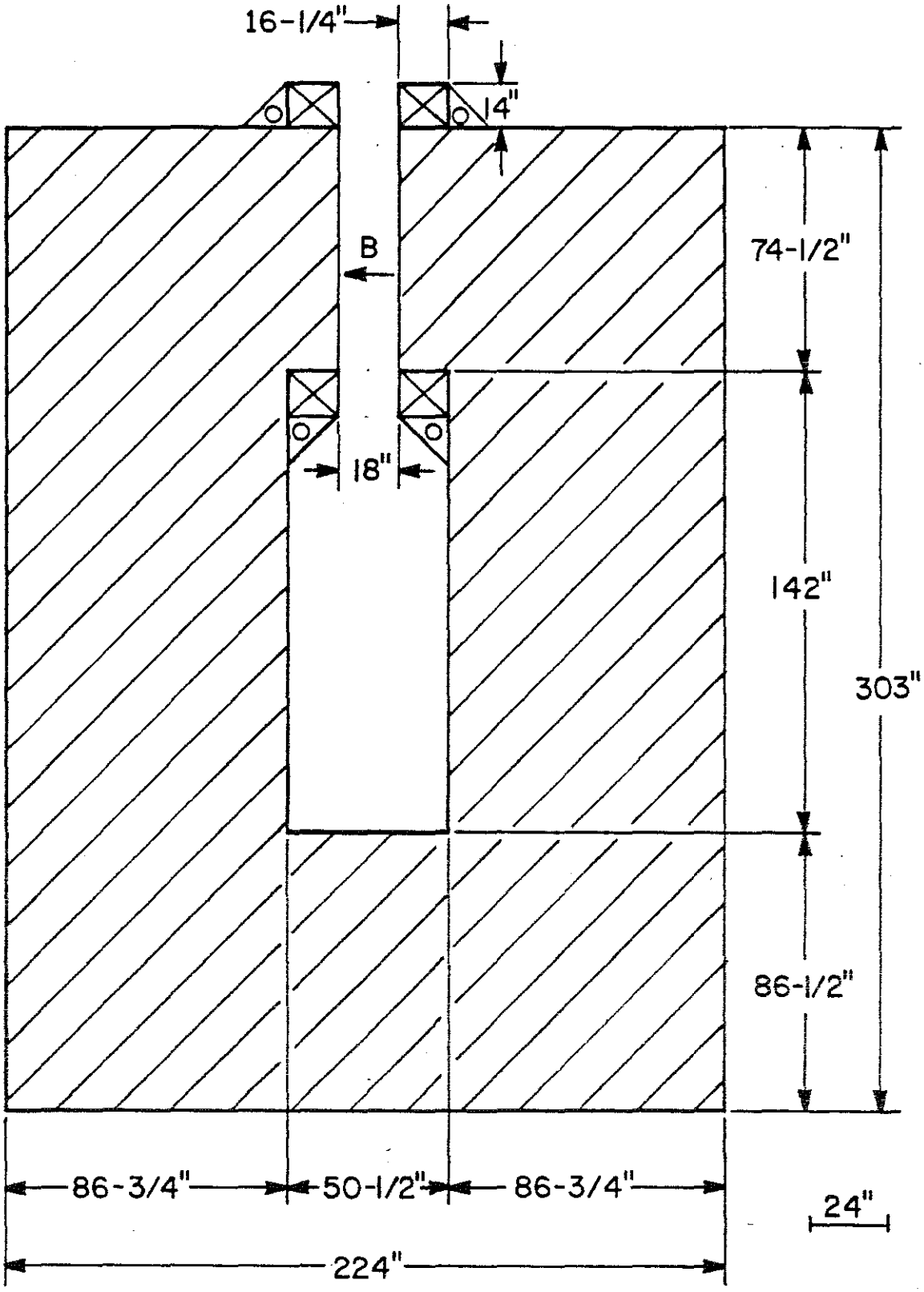

Figure 13

II

SCOPE - DESCRIPTION OF FACILITY

1. OVERVIEW - PURPOSE AND DESCRIPTION OF FACILITY

The purpose of this facility is to provide the users of the detecters at Lab F, E, B and C with a beam enriched in ν_e and ν_t. To accomplish this end, the facility must include a primary beam transport system capable of transmitting full intensity, machine-energy beam to a target located 300 feet upstream of Lab B, the 15' bubble chamber. The target system must be capable of absorbing full beam power, and be implemented with sufficient radioactive material handling ability to accommodate target changeover or repair. An active muon shield is needed to reduce backgrounds at the detectors to acceptable working levels.

The facility also includes all civil structures required for these technical components. Included are Beam Enclosure NE-8 modifications, beam pipe and earth shielding, Pretarget Hall NLA, Target Hall NLB, Spoiler Hall NLC, Service Building NS-5 and related utilities and services. Drawings G-1 and C-1 of Appendix G show the location of the facility relative to other facilities in the Neutrino Area at Fermilab.

In Figure 1, the beam transport system is located in enclosures NW1, NW4, NE8 and NLA. The transport system will also require a new set of beam pipes between enclosure NE8 and NLA. The target system will be located at enclosure NLB. The muon spoilers will be in enclosures NLB and NLC. The power distribution system centered in NS5 will provide power for the beam transport system in NLA. The cooling water system in NS5 services the beam transport elements in NLA, the target system in NLB and the spoiler magnets in NLC. A secondary power distribution system will also be located in NLC to provide DC power for the spoiler magnets.

2. BEAM PIPE, SHIELDING AND ENCLOSURE NE-8 (WBS 1.1,1.2)

The upstream portion of the beam transport system described in Section 5 is contained in existing beam enclosures and pipes. The downstream beam transport is contained in new construction. The existing Beam Enclosure NE-8 is enlarged from a 10' x 8' to a 14' x 8' cross section over a length of 55'. This will provide space for the dipole magnet string and beam stop. The existing berm is removed for this construction and replaced with the higher berm required for the primary beam shielding. The existing portions of

original NE-8 were designed and constructed for this high berm loading.

Direct buried beam pipe, nearly 450' in length, extends the primary beam transport from NE-8 to the Pretarget Hall NLA. Welded, stainless steel beam pipe, in varying sizes of 10", 16" and 24" is laid in granular bedding through an open cut excavation in the existing berm. Radiographic and vacuum leak testing is done to insure high vacuum integrity.

Bermed earth shielding covers the beam enclosures and beam pipe at all locations where physical space is available. Earth thickness varies from 11' to 17' dependent on location along the beam line. Where insufficient space is available, buried steel plates are used to provide the additional shielding required.

In the area between existing Beam Enclosure NE9 and the existing building NWA (old Muon Lab) there is no present earth berming. Concrete retaining walls will be constructed along these existing structures to the height required for the new berm retention.

3. LEPTON HALLS NLA, NLB AND NLC (WBS 1.4,1.5,1.6,1.7)

The three Lepton Halls contain the downstream beam transport, the target system and the spoiler magnets, described in Sections 5, 6 and 7.

The Pretarget Hall NLA is a buried concrete structure 15' x 8' in cross section and 260' long. This enclosure contains the pretarget dipole string in either the 0 mr or 40 mr beam position. The north end of NLA opens into the south end of the Target Hall NLB, and NLA equipment access is through the NLB access tunnel. At the south end of NLA is a personnel labyrinth leading out the berm to the Service Building NS-5.

The Target Hall NLB is a buried concrete structure 25' x 17' in cross section for 80' length, followed by an 18' x 30' cross section for 18' length. The target system, steel shielding box and the first spoiler magnet M-1 are contained in the 80' long section, while the second spoiler magnet M-2 is installed in the downstream 18' long section. The south end of NLB opens to the Pretarget Hall NLA and to an 8' x 8' equipment access tunnel with personnel labyrinth leading out of the berm. The north end of NLB abuts to the Spoiler Hall NLC.

Both NLA, the south part of NLB and the access tunnel are concrete box structures on mat foundations,

constructed through open cut excavation in the existing berm. Upturned beams are used for most of the NLB roof slabs to accommodate the wider span and higher berm loading. A removable concrete roof hatch provides access to the downstream end of NLB for Spoiler M-2 installation.

A 15 ton bridge crane with remote control capability is installed in the Target Hall NLB. This crane will be used for both initial target box installation as well as some service functions.

The NLB target system uses the narrow gage track and transporter equipment identical to that used for many years in the existing Neutrino Target Hall. A track embedded in the floor extends from the downstream end of the target box, out the equipment access tunnel to a depressed loading spur track at the berm toe. A car mounted shield plug door travels out this same spur track when access to NLB is required. Hardstand areas adjacent to the spur are provided for crane and truck loading of target shield caskets that are withdrawn from NLB.

The Spoiler Hall NLC is a high bay steel structure built above a very deep pit. This high bay, serviced by a 25 ton bridge crane encloses the final three spoiler magnets M-3, M-4 and M-5. The structure is 45' wide, 29' above grade and 85' long. The pit floor steps from 20' to 24' below grade to accommodate the varying spoiler magnet sizes. Lateral space is provided for repositioning the spoiler magnets on the 40 mr beam line if required.

The five spoiler magnets as well as the target box are massive structures of steel plate ranging in weight up to 2000 tons for spoiler magnet M-5. H-piling driven to bedrock and topped with concrete pile caps will be used under all five spoiler magnets and under the target box in NLB and NLC. This pile system was used for the Chicago Cyclotron Magnet foundation in the recently completed Muon Lab where both the economic and structural benefits have been proven. Subsurface and bedrock conditions are well understood in the NLC area due to the deep construction work done at the Lab B, 15' bubble chamber as well as the Muon Lab. These sites are within 500' and 1700' of the NLC site respectively.

The deep foundation walls in NLC are constructed with both buttresses and counterforts to economically resist earth pressure. Counterforts are used outside the east wall to provide maximum space for the spoiler magnets

inside. Buttresses inside the west wall not only resist the earth pressure, but also support the 12' wide floor at grade and an intermediate lower landing floor along the west wall. The entire building foundation structure is a mat design independent of the spoiler magnet H-piling pile cap structure.

An entry road from Road A provides truck and crane access to to NLC as well as the roof hatch in NLB. Sheet piling at the north end of NLC excavation will maintain access at the south end of Lab F during the construction period.

Access to the Spoiler Hall NLC is through an equipment and personnel door on the west wall and a personnel door on the north wall, all at grade level. Stair flights connect the grade level to the lower landing floor and pit floor. Magnet power supplies are positioned on the grade floor, an arrangement allowing convenient connection to the magnet coils. Secondary power switchboards for the power supplies are placed on the lower landing floor below.

4. SERVICE BUILDING NS-5 AND UTILITIES (WBS 1.3)

Service Building NS-5 will be constructed at the west toe of the berm by the Pretarget Hall NLA. This location is convenient to the Road A utility corridor, the NLA and NLB personnel labyrinths, and the NLB access tunnel with spur track. NS-5 will contain all power supplies associated with magnets in NLA and NLB and equipment for a new Low Conductivity Water (LCW) cooling system for NLA, NLB and NLC.

An access road from Road A and hardstands provide access to NS-5 as well as the spur track at the NLB equipment access tunnel. Utility branch connections from the Road A corridor connect to either of two substation pads at NLC or NLB or enter NS-5. These utilities include 13.8 primary power, communications and industrial cold water (ICW). Sanitary facilities will not be provided in NS-5 due to low and intermittent occupancy and the availability of such facilities at Lab F, about 400' north.

NS-5 is a block building on grade wall foundation, 33' x 60' x 11' high. The appearance of the building and the juxtaposition to the shield berm is identical to the other service buildings in the experimental areas. The building is partitioned off for isolation of the LCW pump area from the power supply area. Equipment and personnel doors are provided to both areas as well as the exit labyrinth from NLC labyrinth.

Primary power at 13.8 Kv is extended from the Fermilab Master Substation through a new feeder in existing power ducts, nearly 6,000' long. Two new 1500 Kva substations and primary switchgear are provided at NLB/NS-5, while four 1500 Kva substations and primary switchgear are provided at NLC. Secondary power is distributed to switchboards in NS-5 and to the lower landing in NLC.

The existing site-wide industrial cold water (ICW) system provides the primary heat exchange for the new LCW cooling systems in NS-5 and NLB. A closed loop LCW system very similar to many site systems will be installed in NS-5. A heat exchanger rejects heat to the ICW water which is piped on the supply side with an open ditch return on the discharge side. Duplex pumps, deionizers and pressure tanks complete the installation. Stainless steel and copper piping distribute the LCW to the magnets in the beam enclosures and halls.

A small secondary closed loop system is used for the radioactive water (RAW) associated with the target system. This package system has also been extensively used at Fermilab on similar target systems. The system package is installed near the target box and exchanges heat to the LCW. In this manner a two step isolation of the RAW is possible before the ultimate heat rejection to the ICW return ditch.

5. BEAM TRANSPORT SYSTEM

Figure 2 shows a typical beamline magnet system. For every magnet required by the beam optics - to bend the beam toward the next enclosure (dipole), or to focus the beam to contain it within magnet apertures (quadrupoles) - provision must be made for all of the following elements:

a. Cooling Water (LCW)

b. Power Supplies

c. Control Circuits for the Supplies

d. Enclosure Interlocks

e. Beam Instrumentation

f. Shielding

g. Vacuum

The scope for a beamline system is specified by the location, number, and type of magnet. For each magnet, however,

provisions must be made for all of the necessary support elements.

Specification sheets for magnets and supporting devices are given in Appendix B. All of these devices are standard at Fermilab. The Laboratory operates eleven beamlines in the Research Division, and all of these elements are common to these beamlines.

The proton transport system for the DNLF is specified in Table I. Each magnet string in the table is identified by a name: NL4E is a dipole that bends east and is located in enclosure NW4, for example. The survey coordinates are given in a coordinate system whose origin is at the extraction point of the Main Ring. The small diagram in the table defines project north as Z, y as the component elevation relative to sea level, and x as a position west of the extraction point. The first element in NL4 is located 4813.1 feet north, and 11.96 east of extraction, at an elevation of 745.19 feet above sea level.

All magnets south of Z = 2873 feet are not included in the scope of this project. This portion of the beamline exists as the proton transport system to the Neutrino Area and no modifications to these elements or their supporting systems will be required.

All magnets north of Z = 2873 feet and south of Z = 6042 in enclosures NW1 and NW4 exist as a currently operating beamline. They are included in the scope of the project because improvements will be required to the support systems for this segment of the beamline. In particular, an upgrade will be needed to the vacuum system and the beamline instrumentation.

All magnets north of Z = 6042 and south of Z = 6247 in enclosure NE8 exist in this enclosure as part of the NT beamline. For the NL beam, these magnets will be moved to a new location on the west side of the enclosure, and will require modifications to all supporting systems. The remaining magnets in the enclosure - NL8V2 and NL8W2 - will be new magnet procurements for this project and will require new power supplies, control circuits, LCW hook-up and vacuum pipe.

All magnets north of Z = 7200, in the new enclosure NLA, will be new procurements for the project except the 3Q84s. The Research Division currently has a surplus of these standard main ring quadrupoles. All supporting systems will also be new procurements contained in the scope of this project. Some of the magnet procurements will be from Special Process Spares, and are included in the TEC of the project.

Table II gives a summary of new magnets that will be bought by the project, and those expected to be purchased from Special Process Spares. Table III gives a list of all new beamline instrumentation included in the project. Table IV lists new vacuum pumps. The beamline will require only one new 500-5 power supply with controls circuits.

The most critical feature of the primary proton transport to the target is that the beam be delivered to the target as cleanly as possible. A set of segmented wire ion chambers will be distributed along the beamline to determine the beam position and profiles. These chambers will be used to establish the initial beam tune, but will be removed from the beam during data taking because muon background is produced when the beam interacts in the chamber. To monitor the beam during data taking, a set of the Doubler/Saver Beam Position Monitors will be used. These devices are non-obtrusive devices placed out of the beam path and can monitor the position of the beam centroid with a precision of better than 0.5 mm which is quite adequate. "Paint-Can" loss monitors (tubes of liquid scintillator viewed by a low gain photo-multiplier tube) will be used to monitor beam losses. These devices have good linearity and can detect beam losses of a few x 10^5 particles. They will be read with standard charge digitizers. The total beam intensity will be measured with an existing R.F. cavity. Table III gives a list of the new beam monitors required and their locations along the beamline. Other monitors which already exist in the test beam have been omitted.

The transport of primary proton beams at intensities of 10^{13} protons per pulse requires earth shielding 15 feet thick to meet the standard Fermilab radiation levels for fenced areas. The beamline will be covered with earth to this thickness for its entire length, except in the region next to NE9. An oversized beam-pipe is used in this region such that the beam can never strike the pipe. The equivalent of eleven feet of earth is then needed for shielding in this area. All of the beam shielding is contained in the project scope under civil construction.

6. TARGET SYSTEM

Figure 3 shows a typical target system. The target system that will be built for DNLF will be located in enclosure NLB. Although the target system will have provisions for targets of various materials and length, only a full density copper target will be provided by this project. The target system includes:

a. Radioactive Cooling Water System (RAW)

b. Beam Instrumentation

c. Enclosure Interlocks

d. Shielding for the Target including a Re-entrant Plug

e. Target Handling Equipment, including a Transporter and Shield Car.

A description of target handling techniques is given in Appendix D.

The radioactive cooling water system is a standard unit used in the Experimental Areas to meet target and beam dump cooling requirements. The unit is mounted on a platform to facilitate transport. Included in one such unit is the water pump, filters and heat exchangers - all components necessary for standard target cooling. One such unit is included in the project scope.

No specific beam instrumentation is provided for the target system. However, space is allocated on the target bedplate for a future addition of beam instruments.

Enclosure interlocks are required for personnel safety with regard to radiation and electrical hazards. Temperature monitors on the target would also be used to turn off the beam if excessive heating is detected at the target or the RAW system fails.

All target related enclosure interlocks are included in the scope of the project.

Shielding for the target is determined by personnel safety requirements and a requirement to maintain acceptable neutron levels at the detector. These requirements are specified in the section on Design Criteria. The scope of the project contains all shielding related to the project. Earth shielding and concrete work included in building structure are contained in the project scope under civil construction. Steel shielding and some concrete shielding are contained under technical elements.

A handling system will be necessary for this target because of the high levels of residual radioactivity expected. This system uses a rail and bedplate approach for moving such materials. All target handling equipment associated with enclosure NLB is included in the scope of this project.

7. SPOILER MAGNETS

The spoiler magnets are also a magnet system as shown in Figure 2. They require all of the same supporting systems that beamline magnets need except vacuum. The spoiler magnets will be contained in enclosures NLB and NLC. The five magnets (M1 to M5) are shown schematically in Figure 4. All of these magnets, including their support systems, are included in the scope of the project. New power supplies and control modules needed for these magnets are given in Table V.

Cooling water (LCW) for these magnets will be provided by the new water system in NS5 and is included in scope under civil construction. All enclosure interlocks are included in the scope of the project including an interlock system in Lab F. The muon flux near the ceiling of Lab F will be unacceptably high for normal occupancy and a provision for interlocks will be required and is included in the scope of this project.

Beam instrumentation for the spoiler magnet system is not included with the project. However, provision is made for space to insert such instrumentation in the future.

Aside from the magnet steel itself, M3, M4 and M5 have no need for addition shielding. All shielding associated with M1 and M2 is contained in the scope of the project. Earth and concrete is contained in civil, and steel is contained in the technical elements.

DIRECT NEUTRAL LEPTON BEAM, PHASE SPACE PER R. DIXON 11/1/82 85/05/09.

TABLE I.

Z CENT.	X CENT.	Y CENT.	POSITION CODE	ELEMENT CODE	POWER SUPPLY	900 GEV. B/G(KG) OR (KG/IN)
541.0	-.67	725.09	NLQ90			-3.658
572.0	-.67	725.09	NLQ100			3.173
581.0	-.67	725.09	NLQ100			3.173
652.0	-.67	725.09	NLQ101			-3.497
1150.5	-.67	725.09	NLV100			12.410
1161.5	-.67	725.10	NLV100			12.410
1172.5	-.67	725.13	NLV100			12.410
1183.5	-.67	725.17	NLV100			12.410
1194.5	-.67	725.23	NLV100			12.410
1205.5	-.67	725.30	NLV100			12.410
1216.5	-.67	725.38	NLV100			12.410
1227.5	-.67	725.48	NLV100			12.410
1273.5	-.67	725.94	NLMUSP			0.000
1286.5	-.67	726.07	NLMUSP			0.000
1299.5	-.67	726.20	NLMUSP			0.000
1312.5	-.67	726.33	NLMUSP			0.000
1665.2	-.67	729.90	NLMULM			0.000
1677.2	-.67	730.01	NLMULM			0.000
1658.2	-.67	730.12	NLMULM			0.000
1679.2	-.67	730.23	NLMULM			0.000
2234.4	-.67	735.62	NLQ120			2.762
2245.4	-.67	735.73	NLQ120			2.762
2268.9	-.67	735.97	NLHG2			0.000
2277.4	-.67	736.06	NLQ121			-2.373
2288.4	-.67	736.17	NLQ121			-2.373
2299.4	-.67	736.28	NLVG2			0.000
2310.4	-.67	736.39	NLVG2			0.000
2321.4	-.67	736.50	NLVG2			0.000
2373.0	-.67	742.06	NL1ED			14.098
2384.0	-.68	742.16	NL1ED			14.098
2395.0	-.71	742.26	NL1ED			14.098
2406.0	-.75	742.34	NL1ED			14.098
2417.0	-.81	742.42	NL1ED			14.098
2428.0	-.87	742.50	NL1ED			14.098
2439.0	-.96	742.56	NL1ED			14.098
3358.6	-4.59	744.68	NL1G1			3.159
3375.6	-4.73	744.76	NL1DW			-14.894
3397.1	-4.88	744.82	NL1DW			-14.894
3412.6	-4.97	744.83	NL1G2			-2.659
3421.9	-5.01	744.83	NL1V			0.000
3426.4	-5.03	744.83	NL1H			0.000
4796.9	-11.86	745.19	NL7U00			0.000
4813.1	-11.96	745.19	NL4E			13.978
4833.9	-12.12	745.20	NLNL4E			13.978
4846.2	-12.24	745.20	NL4V			0.000
5042.9	-24.97	745.51	NLWALL	U.S. WALL, ENCLOSURE NEB		
5050.4	-25.05	745.52	NLBG1	3G120		-2.580
5074.4	-25.29	745.52	NLBW1	4-2-240		-16.626
5096.4	-25.45	745.53	NLBW1	4-2-240		-16.626
5118.4	-25.54	745.53	NLBW1	4-2-240		-16.626
5135.4	-25.56	745.54	NLBG2	3G120		2.252
5159.4	-25.56	745.55	NLBW1	4-2-240		-16.626
5181.4	-25.49	745.55	NLBW1	4-2-240		-16.626
5203.4	-25.36	745.56	NLBW1	4-2-240		-16.626
5225.4	-25.14	745.56	NLBW1	4-2-240		-16.626
5247.4	-24.86	745.57	NLBW1	4-2-240		-16.626
5264.4	-24.59	745.57	NLBV	6-3-120, VERTICAL		8.573
5291.0	-24.14	745.56	NLBW1	4-2-240		-16.626
5312.0	-23.71	745.54	NLBW1	4-2-240		-16.626
5327.0	-23.40	745.53	NLWALL	D.S. WALL, ENCLOSURE NEB		
7197.5	-3.27	745.00	NLWALL	U.S. WALL, ENCLOSURE NLA		
7205.5	-3.08	745.00	NLAV	6-3-120, VERTICAL		-6.004
7222.4	-2.70	745.00	NLAEW	4-2-240		14.235
7243.9	-2.27	745.00	NLAEW	4-2-240		14.235
7265.4	-1.89	745.00	NLAEW	4-2-240		14.235
7286.9	-1.58	745.00	NLAEW	4-2-240		14.235
7303.9	-1.38	745.00	NLAG1	3G120		4.750
7315.9	-1.24	745.00	NLAG1	3G120		4.750
7322.9	-1.05	745.00	NLAEW	5-1.5-240		14.235
7354.4	-.86	745.00	NLAEW	5-1.5-240		14.235
7375.9	-.74	745.00	NLAEW	5-1.5-240		14.235
7397.4	-.68	745.00	NLAEW	5-1.5-240		14.235
7415.5	-.67	745.00	NLAG2	3QB4		-6.440
7424.5	-.67	745.00	NLAG2	3QB4		-6.440
7433.5	-.67	745.00	NLAG2	3QB4		-6.440
7442.5	-.67	745.00	NLAG2	3QB4		-6.440
7451.5	-.67	745.00	NLAG2	3QB4		-6.440
7460.5	-.67	745.00	NLAG2	3QB4		-6.440
7497.0	-.67	745.00	NLPVT	PIVOT POINT		

07.20. UCLF, GG, TAOD, D.583KLNS. ** END OF LISTING **

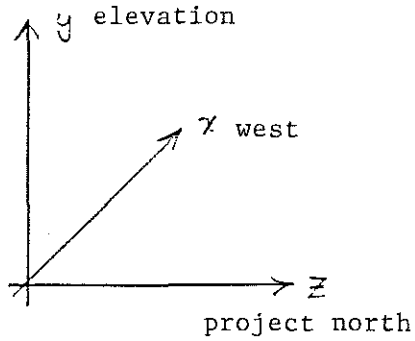

TABLE II

New Magnets for Primary Beamline Transport System in Enclosures NE8 and NLA

Magnet Type	Total No. Required	From Special Process Spares
5-1.5-240 (B1)	4	0
4-2-240 (B2)	7	1
3Q120	2	0
6-3-120	2	0

TABLE III

New Monitoring Devices for Primary Beamline Transport System

Location	Device
NW1	2 pair Beam Position Monitors 4 Loss Monitors
NW4	1 Beam Position Monitor 2 Loss Monitors
NE8	2 Beam Position Monitors 4 Loss Monitors
NPA	2-1 mm Vacuum Swics 1-2 mm Vacuum Swics 2 Beam Position Monitors 3 Loss Monitors 1 Large Beam Position Monitor

TABLE IV

New Vacuum Pumps for Primary Beamline Transport System

Enclosure	Type	Number
NW1	Turbomolecular 160ℓ/s	2
	Turbomolecular 400ℓ/s	1
NW4	Turbomolecular 400ℓ/s	1
NE8	Turbomolecular 160ℓ/s	2
	Booster 330CFM	1
	Booster 100CFM	1
NE8 to NLA (Beam Pipe)	Turbomolecular 400ℓ/s	4
NLA	Turbomolecular 160ℓ/s	2
	Booster 330CFM	1
	Booster 100CFM	1

TABLE V

New Power Supplies for Spoiler Magnet System

Enclosure	Purpose	Supply Type	Number of Control Modules	Number of Supplies
NLC	M1 + M2	240-1.2	1	1
NLC	M3	500-5	1	3
NLC	M4	500-5	1	4
NLC	M5	500-5	1	5

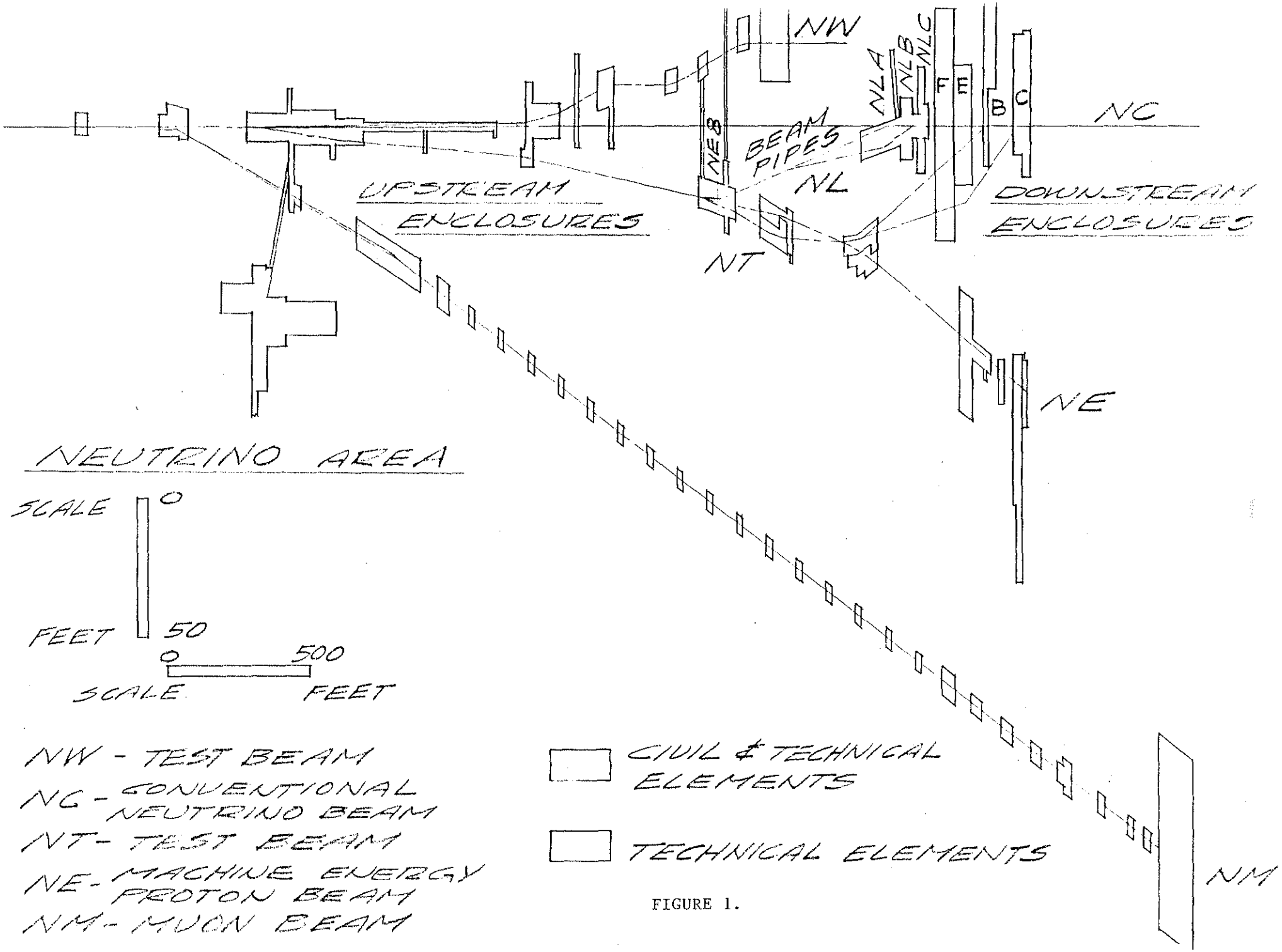
NW
NLA
NLB
NLC
F
E
B
C
NC
NEB
BEAM PIPES
NL
UPSTREAM ENCLOSURES
DOWNSTREAM ENCLOSURES
NT
NE
NEUTRINO AREA
SCALE
0
FEET
50
0
500
SCALE
FEET
NW - TEST BEAM
NC - CONVENTIONAL NEUTRINO BEAM
NT - TEST BEAM
NE - MACHINE ENERGY PROTON BEAM
NM - MUON BEAM
CIVIL & TECHNICAL ELEMENTS
TECHNICAL ELEMENTS
NM

FIGURE 1.

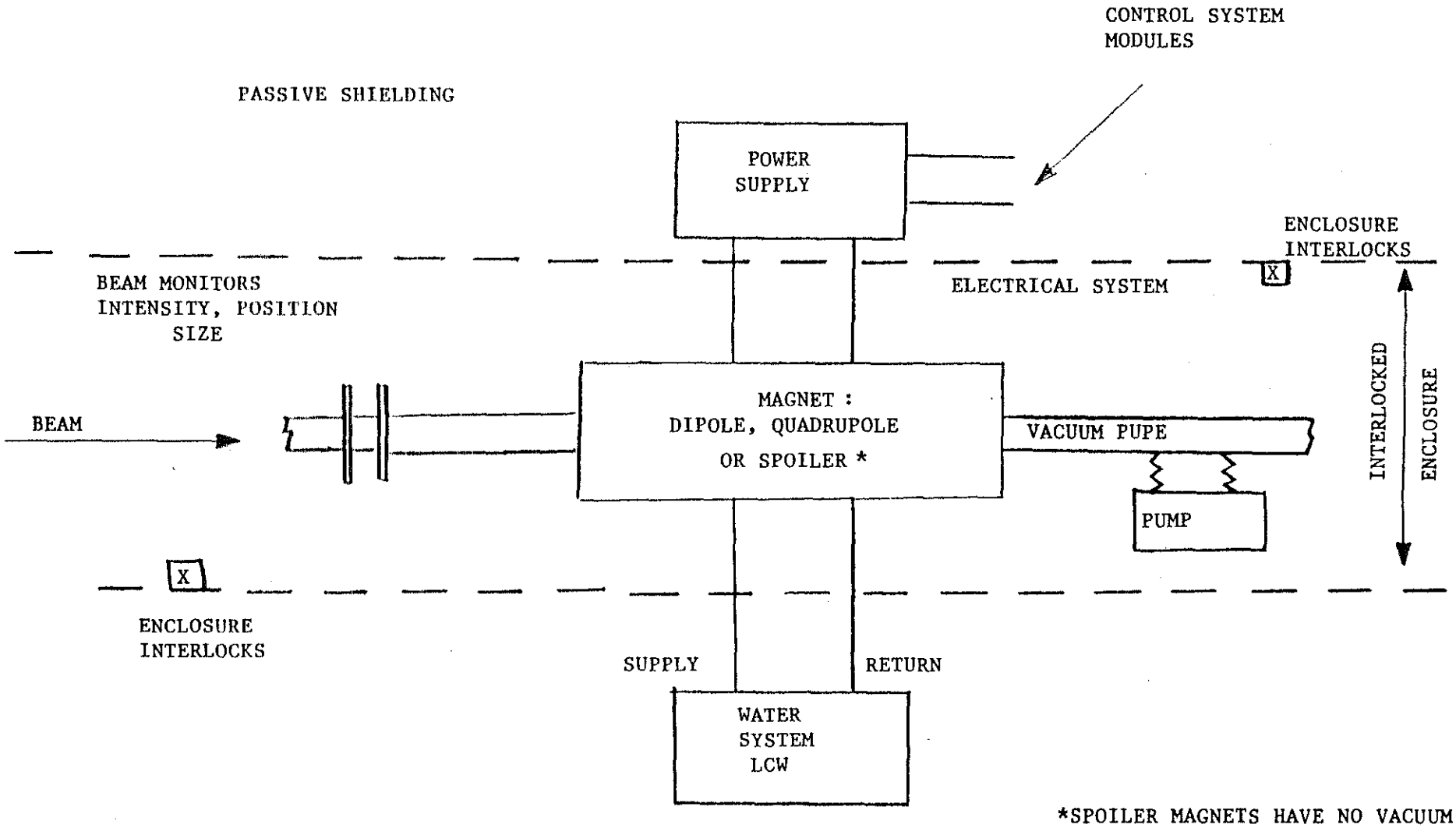

A MAGNET SYSTEM

FIGURE 2

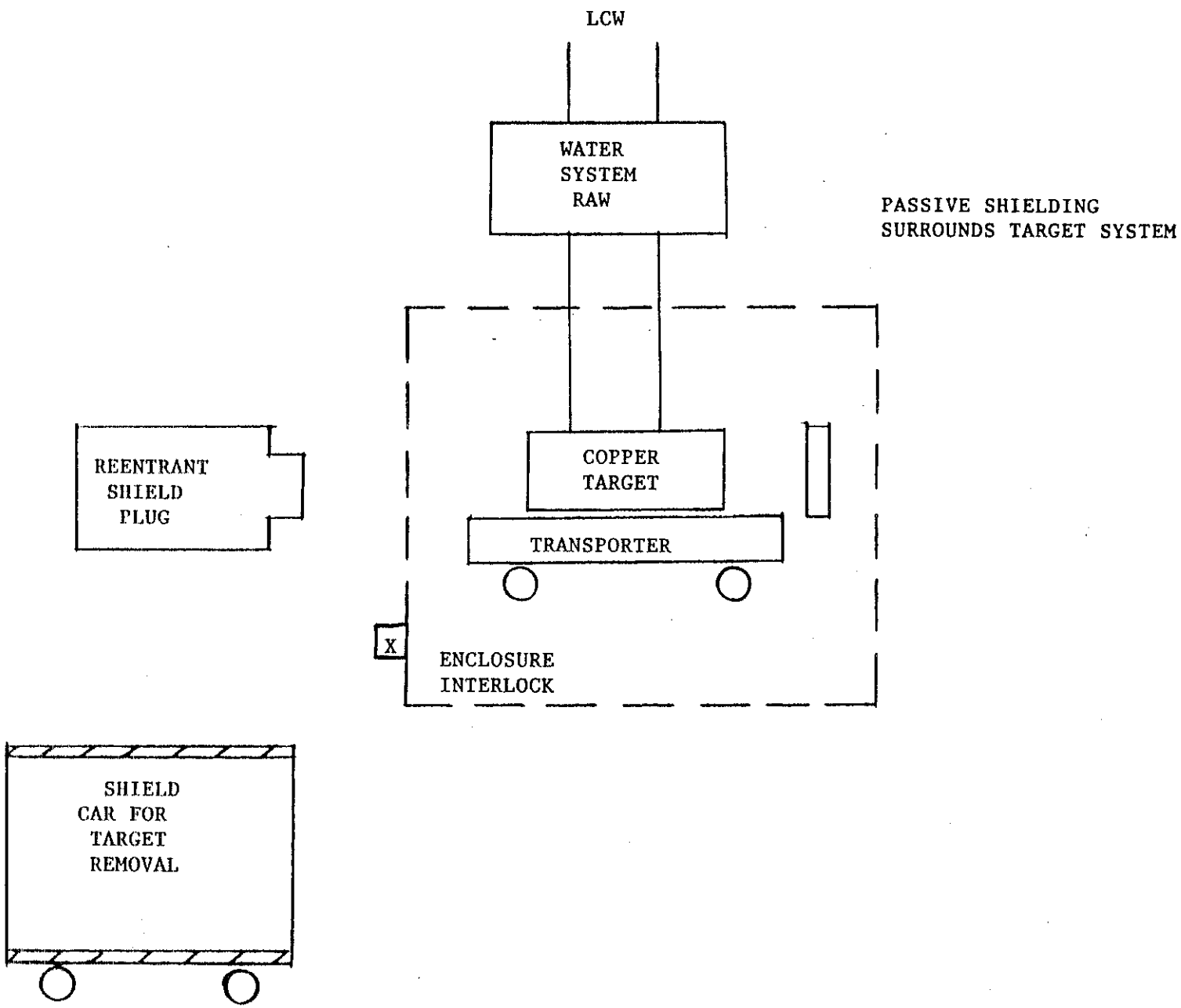

A TARGET SYSTEM

FIGURE 3

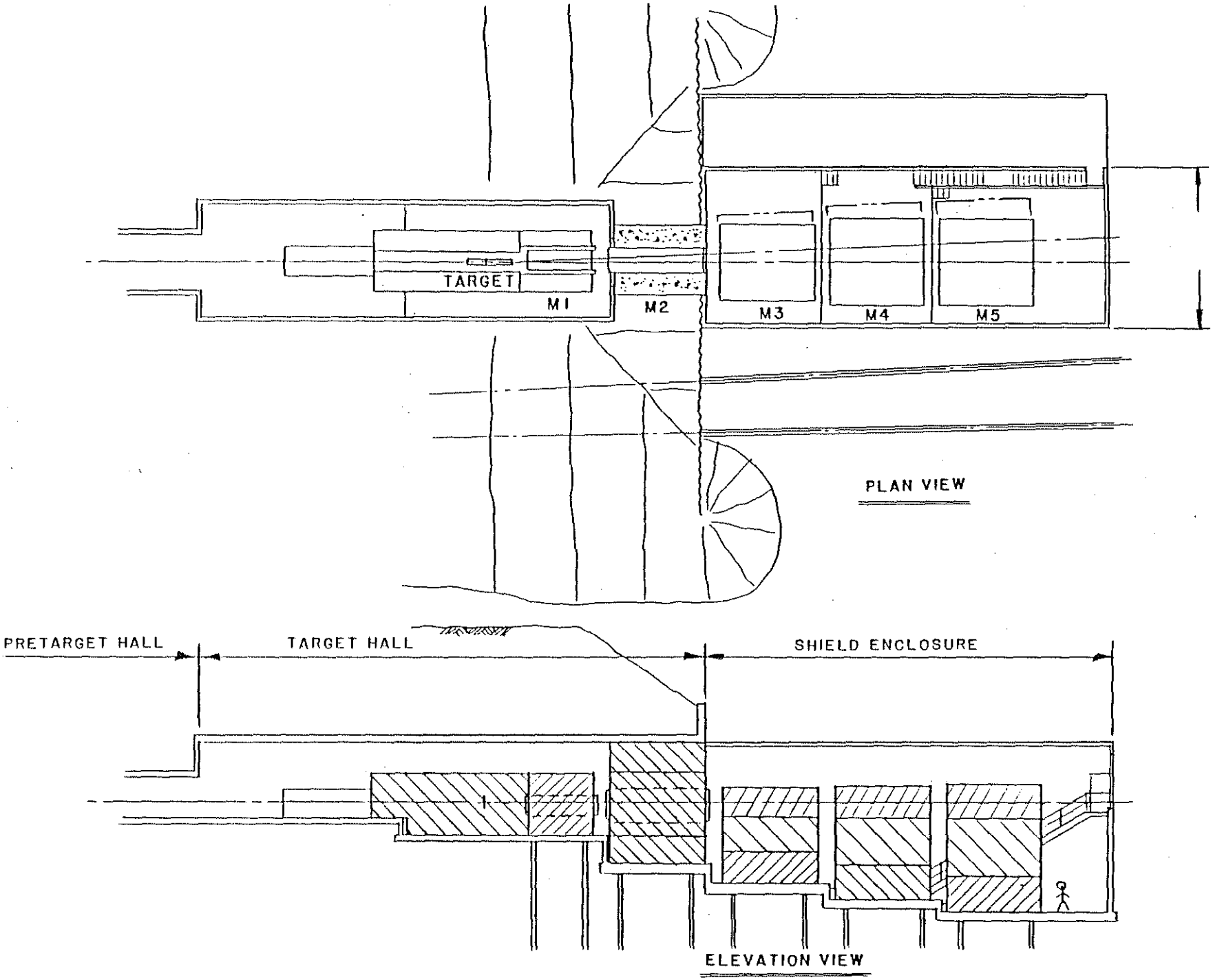
TARGET
M1
M2
M3
M4
M5
PLAN VIEW
PRETARGET HALL
TARGET HALL
SHIELD ENCLOSURE
ELEVATION VIEW

FIGURE 4.

III

DESIGN CRITERIA

1. CIVIL CONSTRUCTION

The design criteria for the civil construction is derived from the basic design of the beam transport, targeting and spoiler magnet systems. Quantity, size and operating conditions of these items set the sizes of beam enclosures, halls, service buildings, beam pipes and utility systems.

The DOE General Design Criteria Manual 6430 is the fundamental design document on which this conceptual design is based. The referenced codes, standards, guides and DOE directives in this manual are the basis of the Title I and II design as it is developed.

2. BEAM TRANSMISSION

A magnet system is defined in Figure 2 of Chapter II. Table I in that chapter gives the location of all magnets in the beam transport system including those that will be newly purchased for this project. This beam transport system was designed to meet certain specifications.

The bending magnets - NL8W1 and NLAEW - are positioned to transport the beam around the neutrino berm and into the target at a zero degree production angle. All other dipoles in the beam exist as part of the NE/NT transport system. The trajectory chosen uses existing enclosures where possible, makes minimal disturbance of the neutrino berm, and minimizes muon halo related to the berm as seen at the Neutrino detectors. A second beam pipe will be installed between NE8 and NLA for future expansion to a 40 mrad beam.

The beam envelope transported to the target is shown in Figure 1a and b. The quadrupoles in NLA called NLAQ1 and NLAQ2 combine to form a large beam size at the target. This large beam size is necessary to allow full machine intensity to strike the target without damage. The remaining quadrupoles transport the beam through the vacuum pipes, and make the beam sufficiently small to fit through all apertures without scraping.

The vacuum requirements for the primary proton transport were determined by considering the muon flux at the 15' and 1 meter Bubble Chambers which results from beam interactions with the residual gas in the beam pipe. Upstream of

enclosure NE8, the vacuum must be 0.1 micron; downstream of NE8, where the beam points more closely at the detectors, a vacuum of 0.03 microns has been specified. A distributed system of roughing and turbo-molecular pumps has been designed to provide the vacuum. The system is shown in Figure 2. The beamline has no vacuum windows between G-2 and the target. It is equipped with gate valves to allow sections of the line to be isolated and repaired without disturbing the vacuum in the rest of the line.

Beamline instrumentation is positioned to aid in beam transport from one enclosure to the next, to measure beam size, to determine if quadrupole focusing is correct, and to measure beam intensity. The monitors chosen must place no material in the beam to avoid creating backgrounds at the neutrino detectors.

Power consumption in the magnet system, including the spoiler magnets, determines the size of the LCW system. Table I gives water flow and power for each magnet and the total required for the beam. The pumping station at NS5 is sized for this load.

Radiation Safety interlock systems are designed to meet criteria set in the Fermilab Radiation Safety Guide.

Data sheets for power supplies and control modules are given in Appendix B.

3. TARGET SYSTEM

The target material is chosen to meet two criteria. The experiments require a target of dense material to absorb pions whose decay produces a neutral background. To absorb full beam power, the target must have good thermal properties so that water cooling will be effective. Copper is chosen as the target material because it meets these criteria. Provisions will also be made for other materials such as tungsten and beryllium to allow for future experiments.

The water system that provides cooling for the target is a standard radioactive water system used in the Experimental Areas. The cooling requirements of this load are easily handled by the RAW system. Details of the system are given in Appendix B. Temperatures will be monitored remotely. An aluminum chill block cooled with water will house the copper target.

Shielding required for radiation produced at the target has been considered from three aspects:

1. Personnel protection on and at the side of the berm adjacent to the dump and downstream of the magnets following the dump.

2. Radioactivation of the ground water in the soil surrounding the dump.

3. Excessive bubble formation in both the 1 meter and 15 ft. bubble chambers downstream of the dump.

The neutron flux from the dump, with various designs of shielding, has been evaluated using CASIM. A typical result is given in the elevation view of the dump shown in Figure 3. Contour plots of equal star density are shown in the shielding round the dump. The earth shield is designed to match the contour of 10^{-16} stars/cm^3/proton. This produces 0.0015 mRem/hour for personnel on the berm, which is acceptably low.

To control soil activation around the target, adequate iron shielding is placed below and around the concrete enclosure of the dump.

At the 15 ft. Bubble Chamber the neutron flux will be about 20 per meter which is an acceptably low bubble background. The corresponding neutron flux in the 1 meter chamber at 58 meters from the dump will be 300 per $meter^2$. Given the small size of the chamber this flux will also produce a tolerably low bubble rate.

The earth shielding is included in the scope under civil construction, the steel shielding is a technical element.

The target system (Dwg. Q-1, Q-2 & Q-3) is based upon a full density copper target with the capability of using other target elements such as tungsten and beryllium of full or partial densities. Drive system ports (Sec. Dwg. Q-2) will be provided for all potential targets, even though this project will provide only a full density copper target.

The target will become highly radioactive and special handling of the target will be required. A rail system used in conjunction with a movable crane will be the mode for moving the radioactive target. The target will be encased during the entire transporting operation in a 40 ton transfer shield (Sec. E, Dwg. Q-2). The target in the transfer shield will be moved on a lowboy truck trailer to the existing Target Service Building (TSB) for repair or dismantling. Fermilab philosophy for handling the target is based upon existing experience currently being used. The following articles have been published on target handling by Fermilab personnel.

a. "Target Handling System For the 200 GeV Proton Accelerator". Published in Proceedings of 18th Conference on Remote System Technology 1970

b. "Operating Experience at Fermilab's Neutrino Target Complex". Published in Proceedings of 26th Conference on Remote System Technology 1978

Fermilab's personnel have on many occasions used the movable crane/lowboy truck trailer/rail system for loads greater than 40 tons.

A description of the radioactive material handling for this facility is given in Appendix D.

To assure that the overall passive shield requirements of the target pile at the target entry point are met, a shield plug on wheels (Dwg. Q-1 & Q-2) is used to allow for target access.

The system has provision for vacuum to be extended to the face of the target. This is required to minimize backgrounds for the experiments.

A utility trough with disconnect points is required to provide for connections of water and instrumentation to the radioactive target.

A motorized shield door is required to shield personnel from radiation during a target change. The shield door is moved remotely to assure minimum radiation to personnel.

The target bed plate provides for translational and rotational movement of future targets with target push rods (Sec. B, Dwg. Q-2). External radiation monitoring of the target is also provided using the feed-through ports.

4. SPOILER MAGNETS

These five magnets are shown in Figures 4-8. Relevant magnet parameters are shown in Table II. If all these magnets are operated DC, the power consumption totals 4 Mwatts. Therefore, the three air-core C-magnets will be ramped from low current to full current once per minute. Using this scheme, the average pulsed power is reduced to about 1.25 Mwatts. In addition, the ramp up from low current will be automatically inhibited whenever there is no beam injected into the Tevatron, which will probably reduce the power consumption another 30%.

In order to target the beam at angles between 0 and 40 mRadians, the air-core magnets must be mounted on Hillman rollers and pivot about the target point. This motion will not be done very often (perhaps once in two years), and this project's scope provides for the 0 mRadian position only. The first two magnets are wide enough to accommodate both 0 and 40 mRadian targeting angles. Because of shielding constraints, magnet M2 is permanently buried under the berm. If problems should arise with the coil, a procedure for removing it for repair has been developed (see Appendix D). The coil design will be very conservative to reduce the possibility of such repairs.

The radiation levels expected from muons in enclosure NCE (Lab F) in the region of the 1 meter Bubble Chamber are shown in Figure 9. The platform above the chamber will be inaccessible when the beam is on; the radiation levels in the rooms on the west will be low enough to allow continuous occupancy.

5. SPOILER MAGNET COIL DESIGN CRITERIA

The same conductor will be used for all five magnets. M1 and M2 will operate at much lower currents than M3, 4 and 5, which must operate at high current densities to obtain the required field distribution in the vertical mid-plane. The insulation scheme for the M1 coil will be mica-based because of the potential for radiation damage. The other coils will use Scotch-ply and B-stage epoxy-glass tape. The coils for M3, 4 and 5 will be designed so that they may be installed or removed without any disassembly of the iron yokes.

6. SPOILER MAGNET YOKE DESIGN CRITERIA

All magnets will be designed to utilize low carbon steel plates, produced by the continuous casting method in thicknesses of 8 to 12 inches. All the steel will be specified as AISI 1008 (0.1% maximum carbon content).

The M1 yoke will be designed to facilitate removal of radioactive coils should they fail. The yoke will be assembled with the overhead crane in the Target Hall. Individual pieces will be face-machined to permit quick disassembly for coil removal.

This magnet not only satisfies the requirements for the magnetic field design, but also acts as part of the primary shield requirements for the target and target cavity. The size of this magnet allows for all external surfaces to have low residual radiation. This allows for personnel to work

near the magnet when the beam is not in operation. The magnet is designed to be opened remotely (Section A, Dwg. Q-2) by moving the exterior sides (which are on rollers) to obtain access to the coil. The coils will be supported with lifting fixtures which will be handled with a remote radio controlled crane.

A description of the radioactive M1 magnet coil removal is given in Appendix D.

The M2 yoke will be designed to be assembled and disassembled through the access hatch, using a mobile crane. Individual pieces are face-machined to facilitate disassembly for coil removal.

The yokes for M3, 4 and 5 will be similar in design to the 2000-ton magnet built in 1982 for Fermilab experiment E-605 (Figure 10).

The yokes for M3, 4 and 5 will be assembled using the 25-ton overhead crane in the Spoiler Hall. In general these magnets need not produce a highly uniform magnetic field and therefore little machining is required for the pieces comprising the main yoke. The pieces making up the poles are more precisely machined since they must accommodate the coils.

Table III compares the spoiler magnets to a number of other large analysis dipoles designed and built at Fermilab in recent years. Table IV is a summary sheet for the spoiler magnets.

TABLE I

LCW Requirements in NS5

Enclosure	Electric Power	Water Flow
	kw	gpm
NLA	675	87.6
NLB	50.1	18.0
NLC	4204.9	526.0
NS5	117.0	62.0
TOTAL	5047	693.6

Table II Summary of "New" Design of
DNLF Spoiler Magnets

R.W. Fast
May 8, 1985

agnet	M1	M2	M3	M4	M5	
NI_T	54	61	696	890	976	Amp-turns
T	72	78	168	216	240	turns
	750	780	4143	4120	4067	A
onductor	1.288 x 1.288 x 0.618 ϕ inches					
etal	1.36 in^2					
etal	551	573	3046	3029	2990	A/in^2
nductance	0.524	1.210	0.365	0.579	0.714	H
esistance / ength @ 150°F	6.95 $\mu\ \Omega$/ft					
onductor length	2714	3783	8030	12230	14112	ft
esistance	0.0189	0.0262	0.0558	0.0850	0.0981	Ω
= L/R	27.7	46.2	6.54	6.81	7.28	s
C Voltage	14.2	20.4	231.2	350.2	398.9	V
C Power	10.7	15.9	958	1443	1622	kW
eight of conductor	7.15	9.97	21.1	32.2	37.2	tons

Table III. Comparison of DNL Facility Magnets to Existing Analysis Dipoles

Magnet	Size-Stored Energy (MJ)	Current (A)	Current Density in Metal(A/in^2)	DC Power (kW)	Coil Weight (tons)	Iron Weight (tons)	Typical iron pc size(tons)
DNLF - M1	0.15	750	551	10.7	7.2	540	6
- M2	0.37	750	551	15.4	10.4	780	8-15
- M3	3.1	4143	3046	958	21.1	1050	10-20
- M4	6.2	4120	3029	1443	32.2	1830	15-25
- M5	5.8	4067	2990	1622	37.2	1950	10-27
Analysis Dipoles							
E-711 (1985)	1.1	4500	2419	700	33	78	20
E-687 (1985)	1.3	2500	1107	400	69	250	13
E605, M12 (1982)	7.7	4150	739*	1200	94*	2000	28
"Rosie" (1979)	2.3	2350	2254	862	27.7	130	20
BM109 (1975)	0.6	2700	4283	232	6	45	25

* Aluminum coil

TABLE IV

SPOILER MAGNET SUMMARY SHEET

MAGNET NAME	STEEL WEIGHT TONS	COPPER WEIGHT TONS	STAINLESS WEIGHT TONS	NUMBER OF STEEL PLATES	MACHINED AREA FT^2	STEEL COST PER TON	POWER† DC kw	TOTAL* COST $1000
M1	540	7.8	5.5	80	5080	713	11	508
M2	780	11.4	46.5	83	10280	746	15	890
M3	1050	23.2	-	58	2550	377	958	608
M4	1830	35.4	-	87	3930	369	1443	1017
M5	1950	40.9	-	73	3690	354	1622	1072
TOTAL	6150	118.7	52	381	25530		4049	4095

*Includes magnet steel, fabricated coil, stainless steel and construction

†Magnets will be ramped to 50% of DC power.

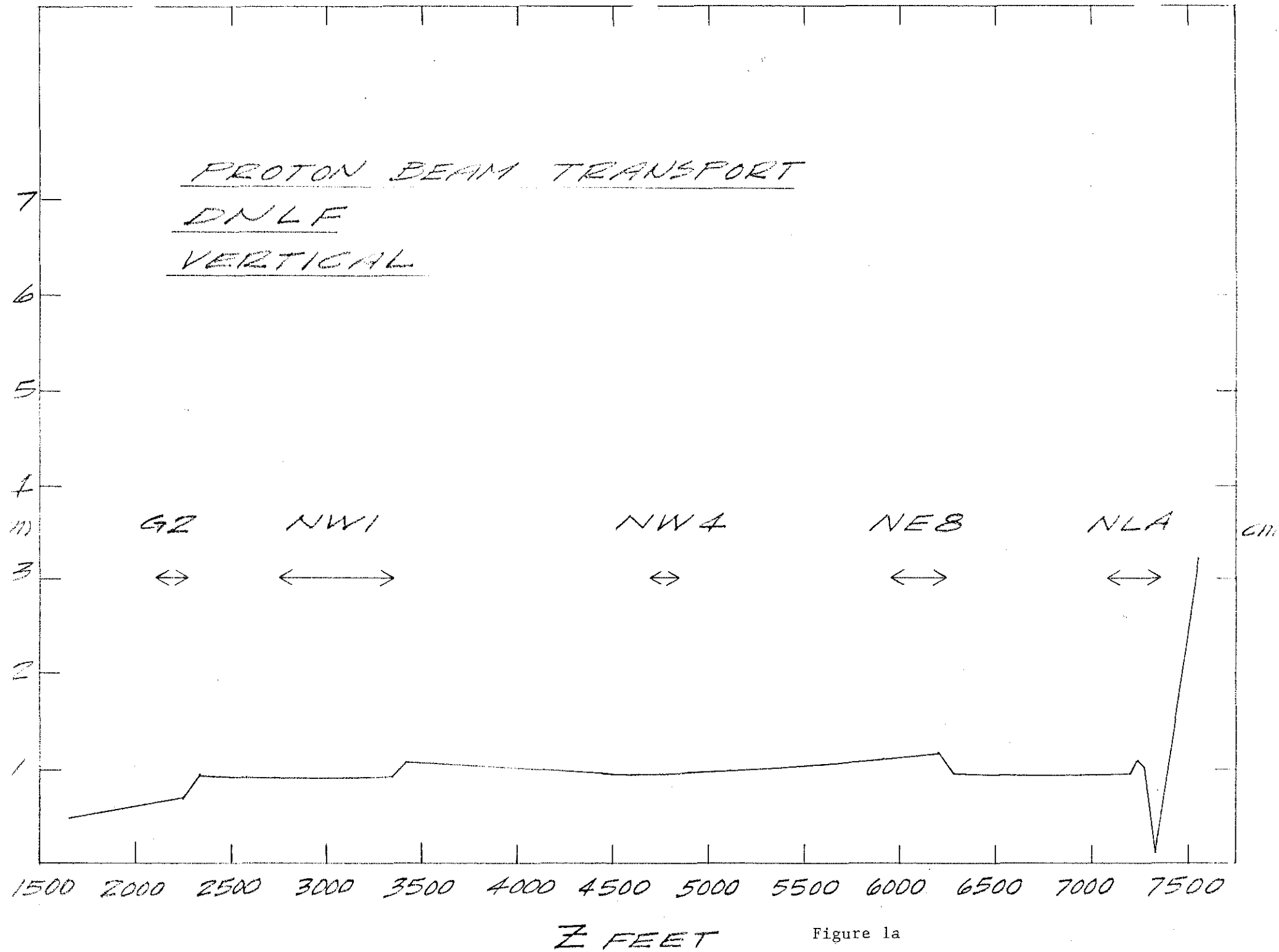
PROTON BEAM TRANSPORT
DNLF
VERTICAL
G2
NW1
NW4
NE8
NLA
7
6
5
4
3
2
1
1500
2000
2500
3000
3500
4000
4500
5000
5500
6000
6500
7000
7500
Z FEET

Figure 1a

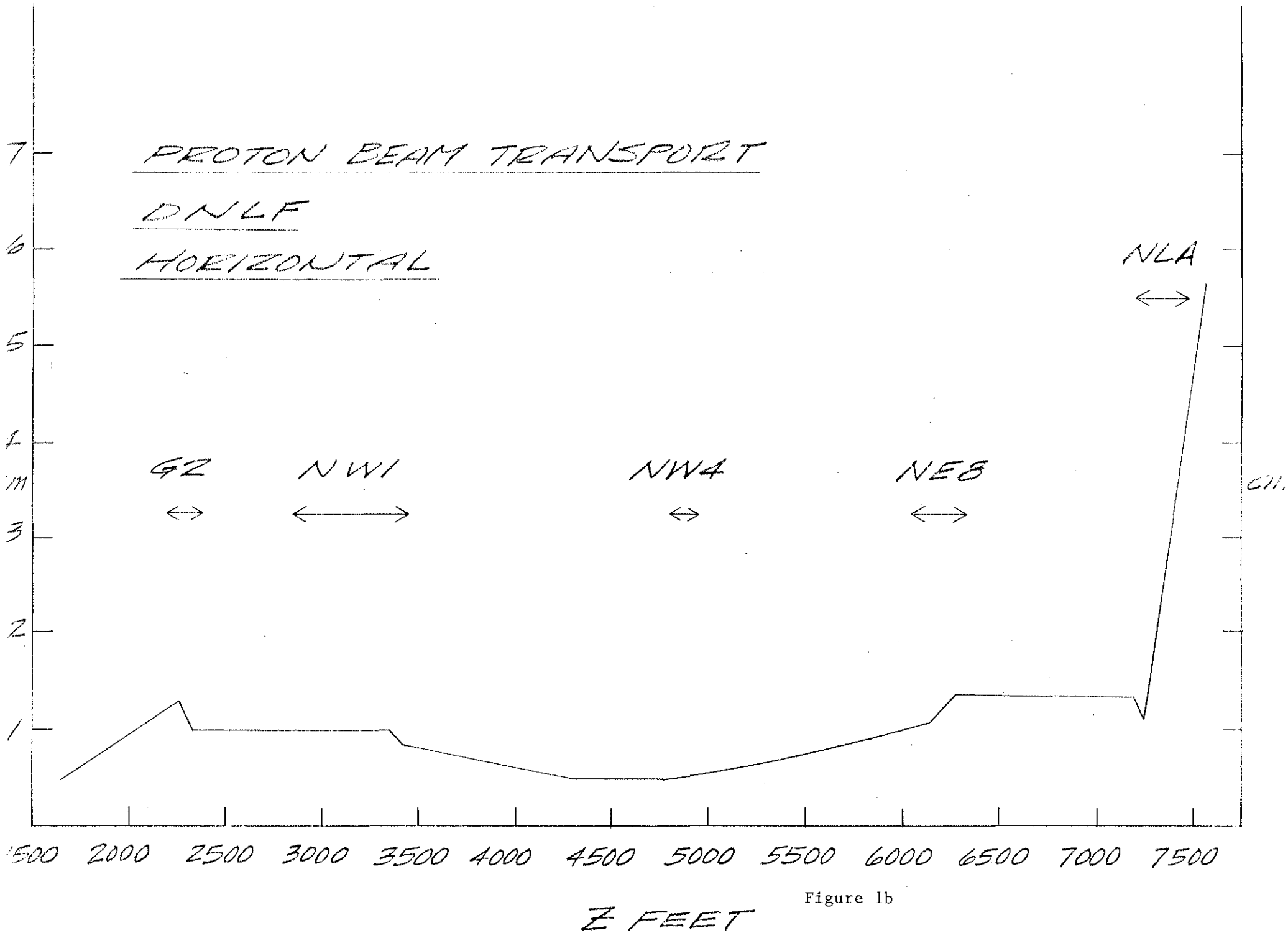
PROTON BEAM TRANSPORT
DNLF
HORIZONTAL
GZ
NW1
NW4
NE8
NLA
7
6
5
4
3
2
1
m
cm.
500
2000
2500
3000
3500
4000
4500
5000
5500
6000
6500
7000
7500
Z FEET

Figure 1b

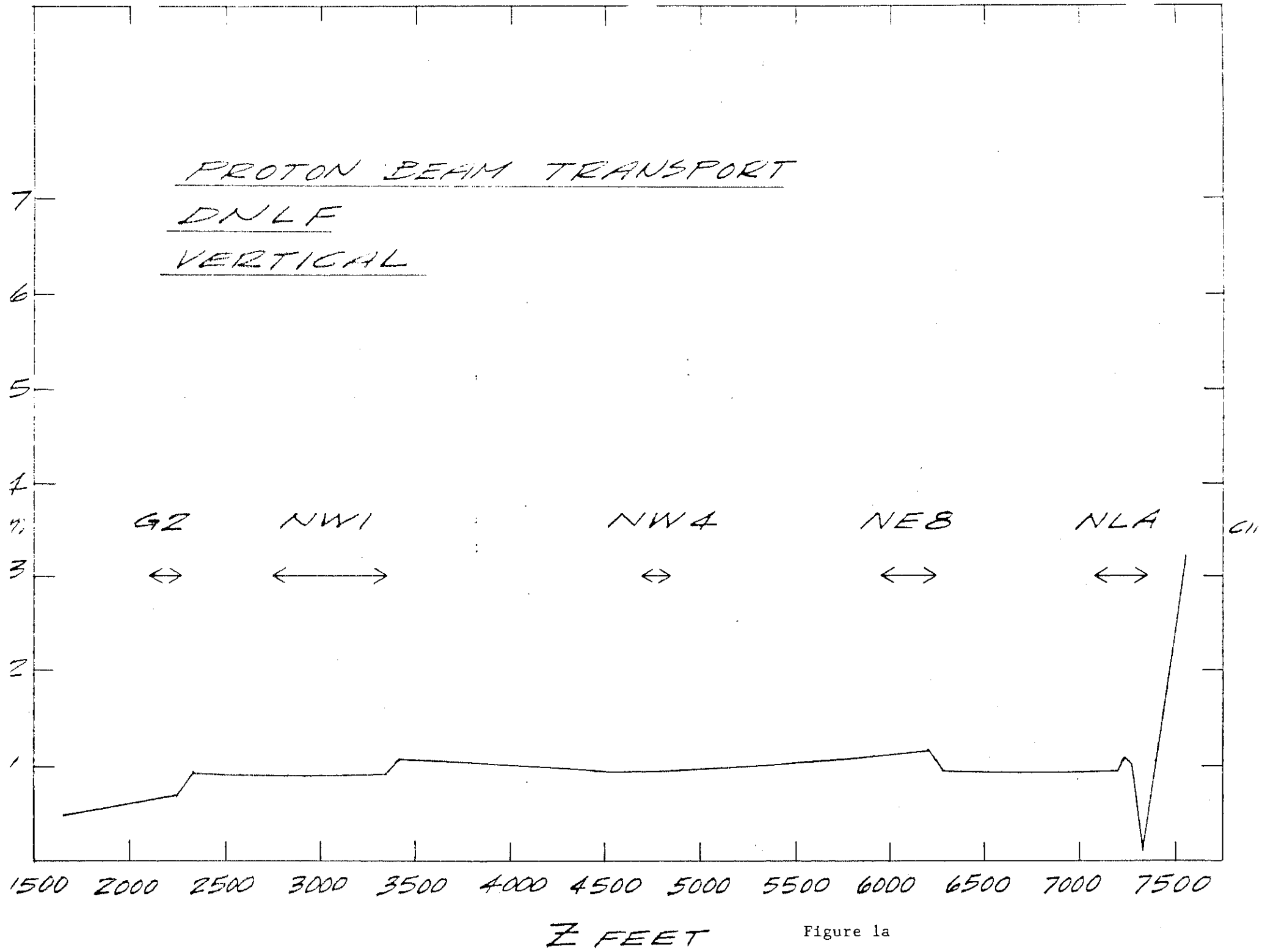
PROTON BEAM TRANSPORT
DNLF
VERTICAL
G2
NW1
NW4
NE8
NLA
7
6
5
4
3
2
1
1500
2000
2500
3000
3500
4000
4500
5000
5500
6000
6500
7000
7500
Z FEET

Figure 1a

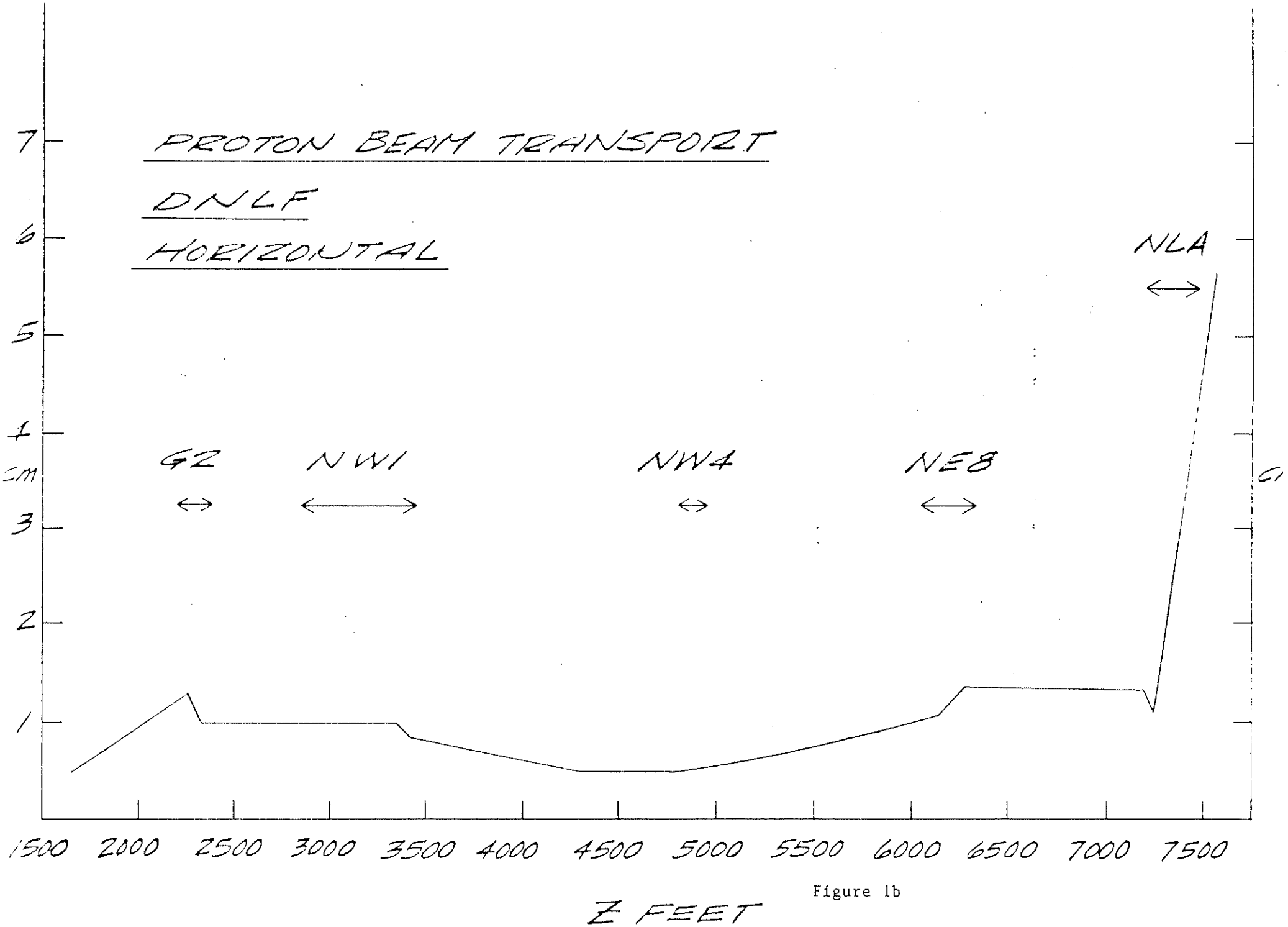
PROTON BEAM TRANSPORT
DNLF
HORIZONTAL
GZ
NW1
NW4
NE8
NLA
CM
7
6
5
4
3
2
1
1500
2000
2500
3000
3500
4000
4500
5000
5500
6000
6500
7000
7500
Z FEET

Figure 1b

VACUUM SYSTEM SCHEMATIC

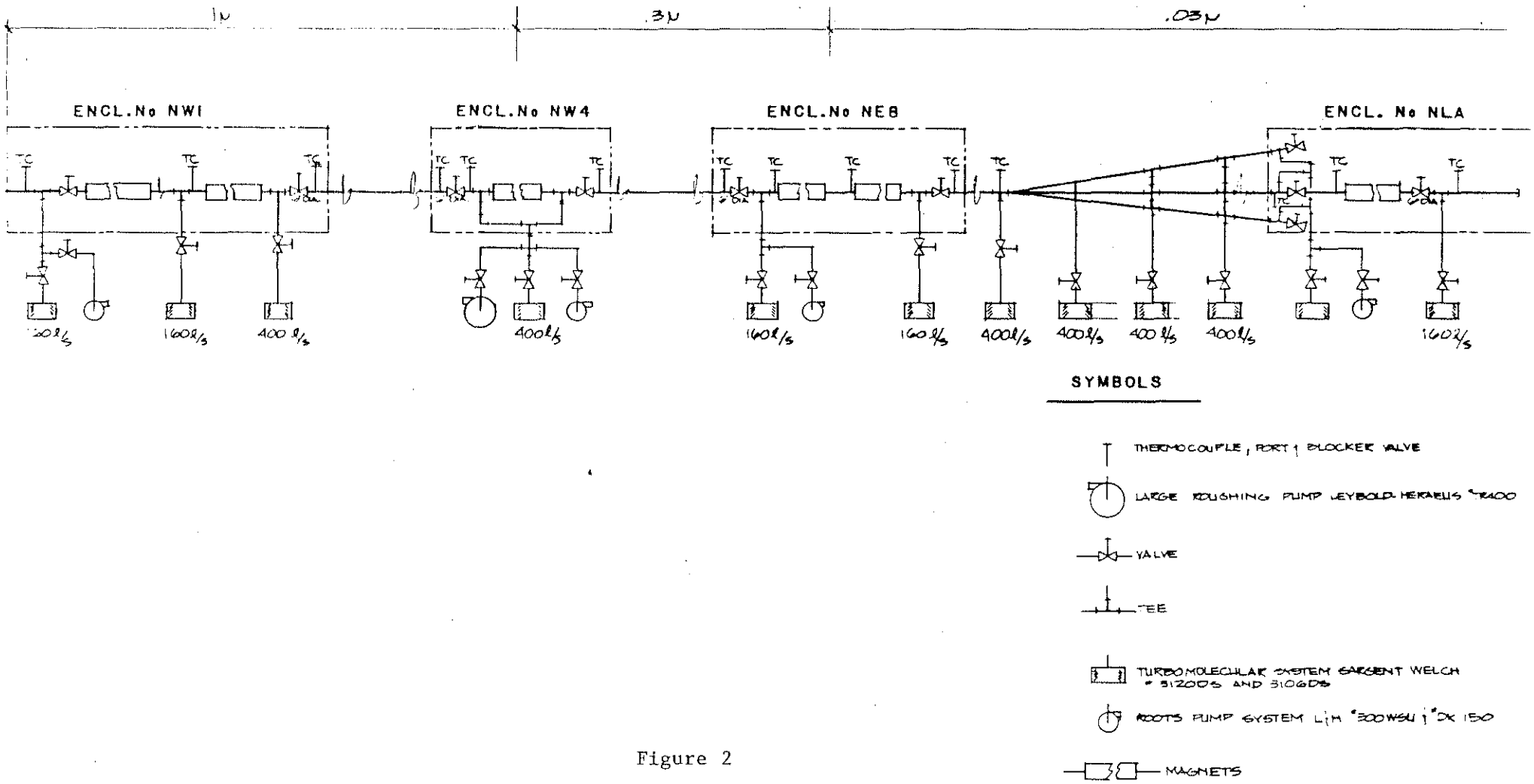

Figure 2

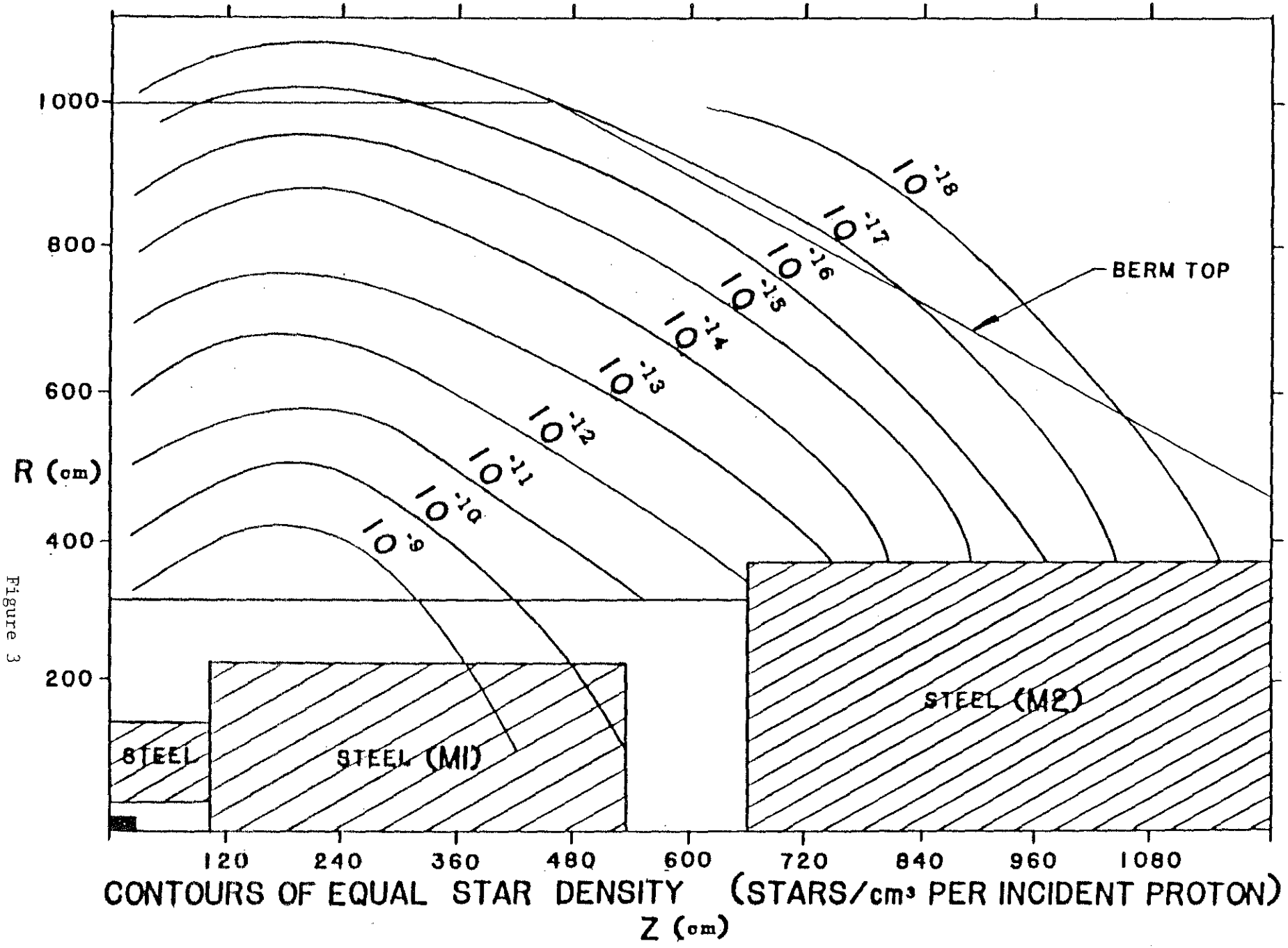

CONTOURS OF EQUAL STAR DENSITY (STARS/cm³ PER INCIDENT PROTON)

Figure 3

M1

177" LONG

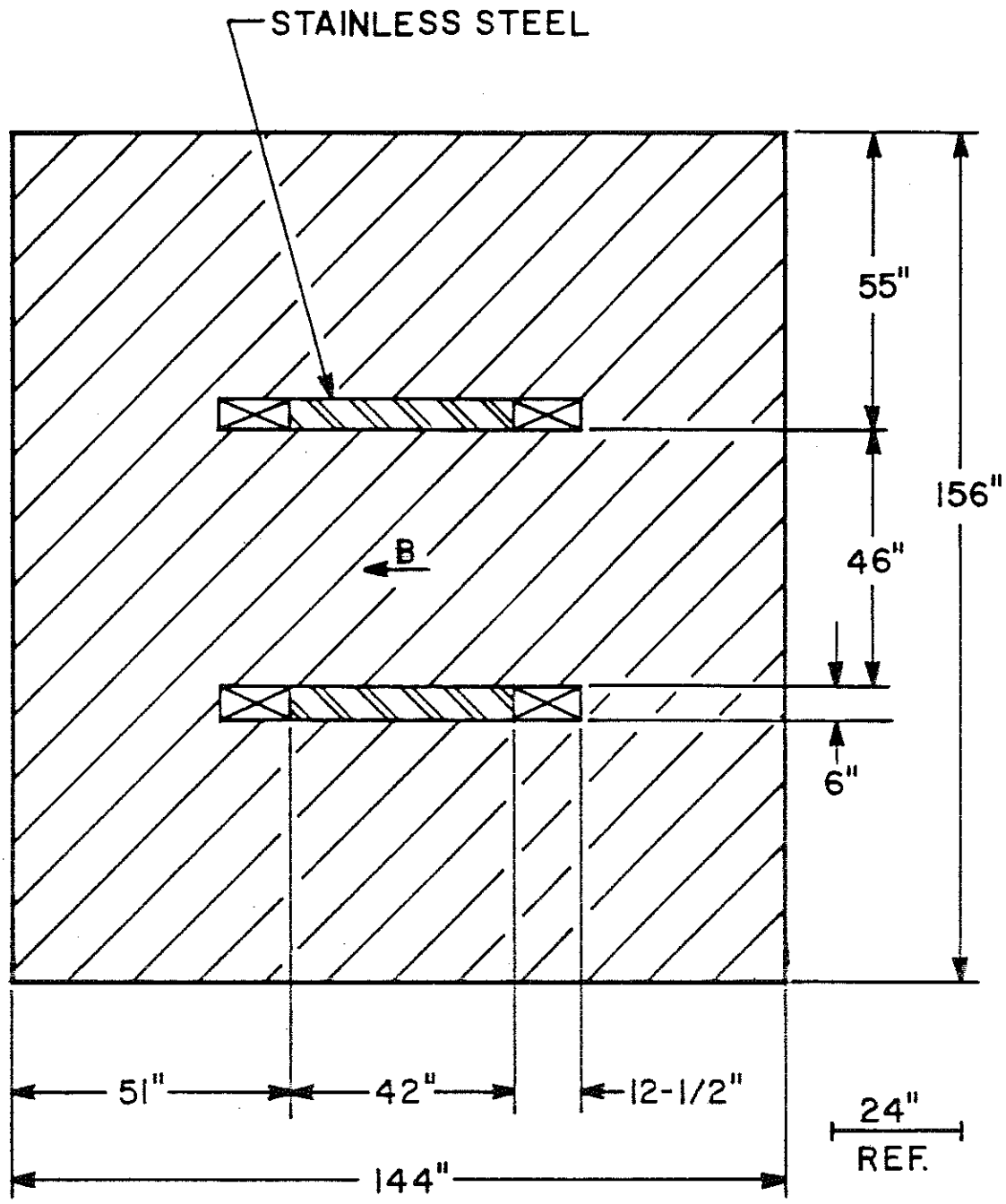

Figure 4

M2
197" LONG

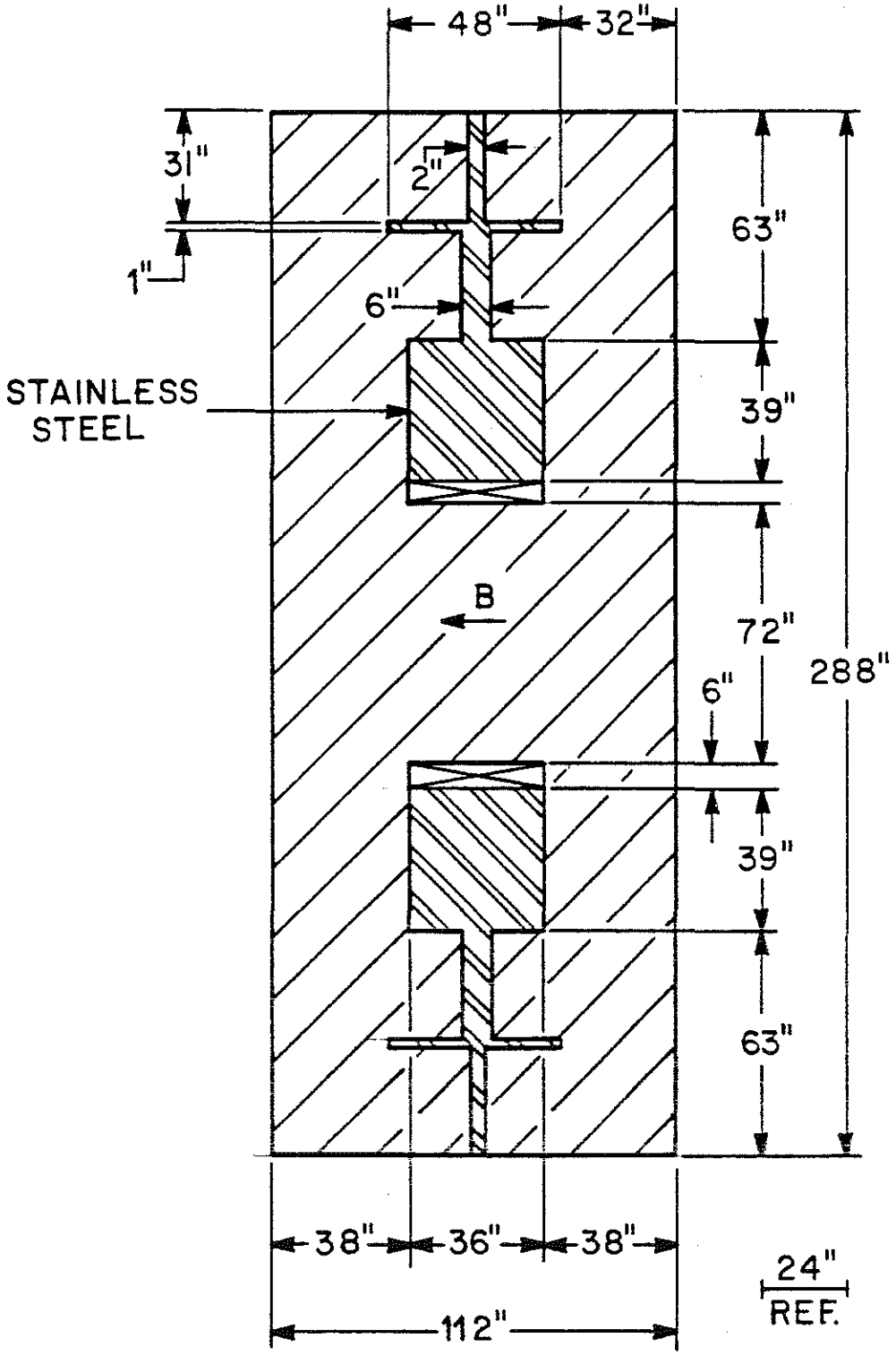

Figure 5

M 3
197" LONG

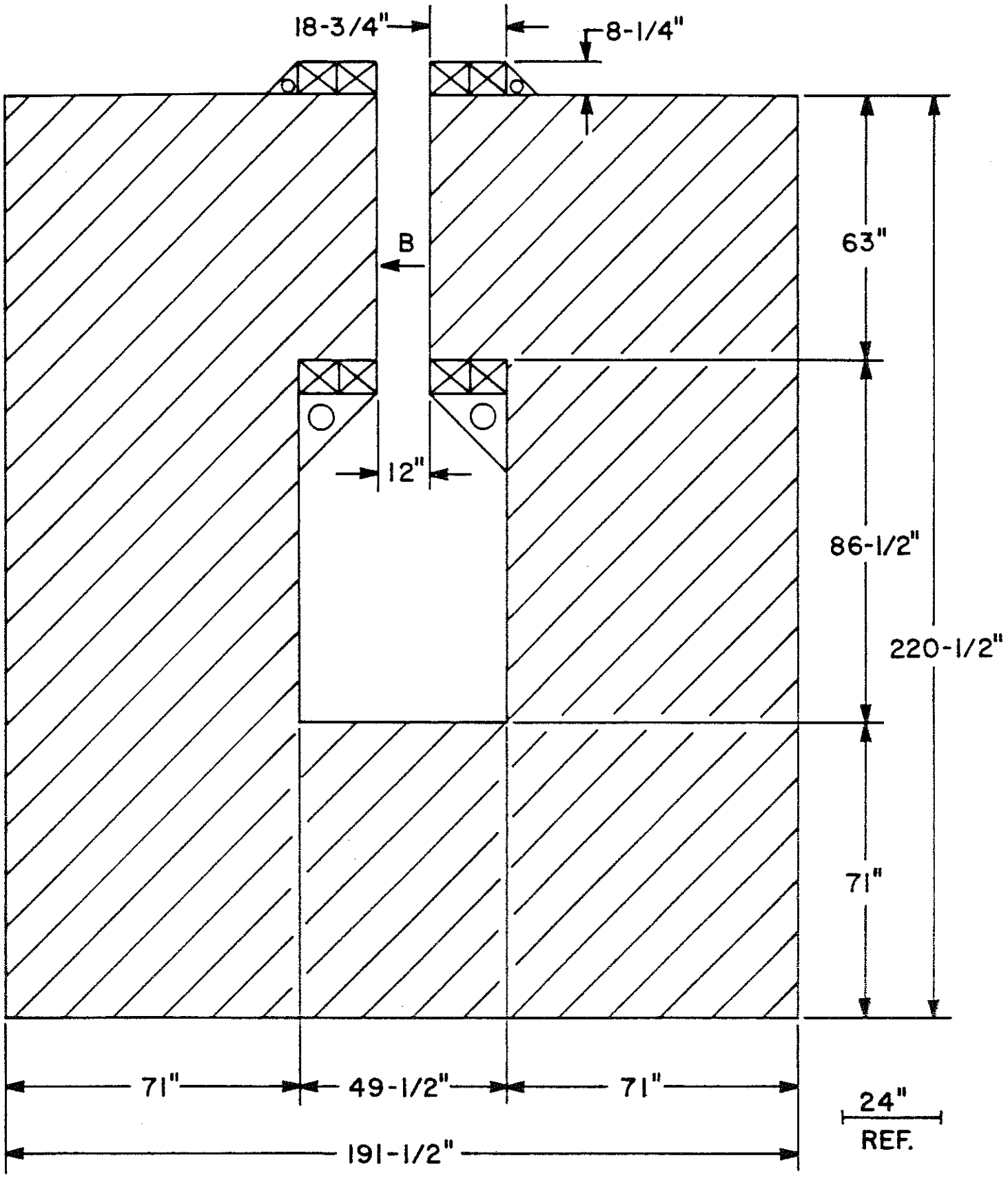

Figure 6

M4
276" LONG

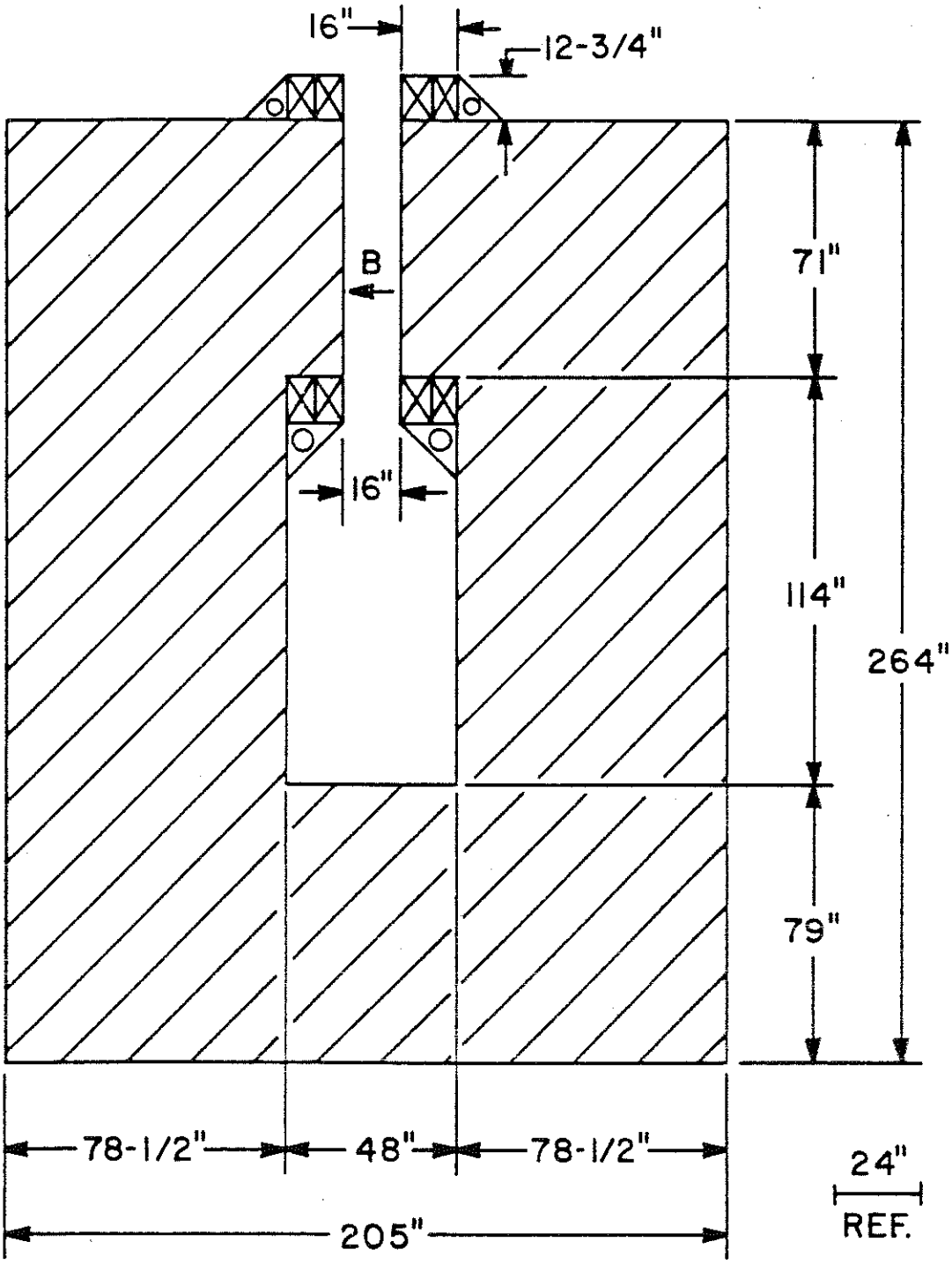

Figure 7

M5
236" LONG

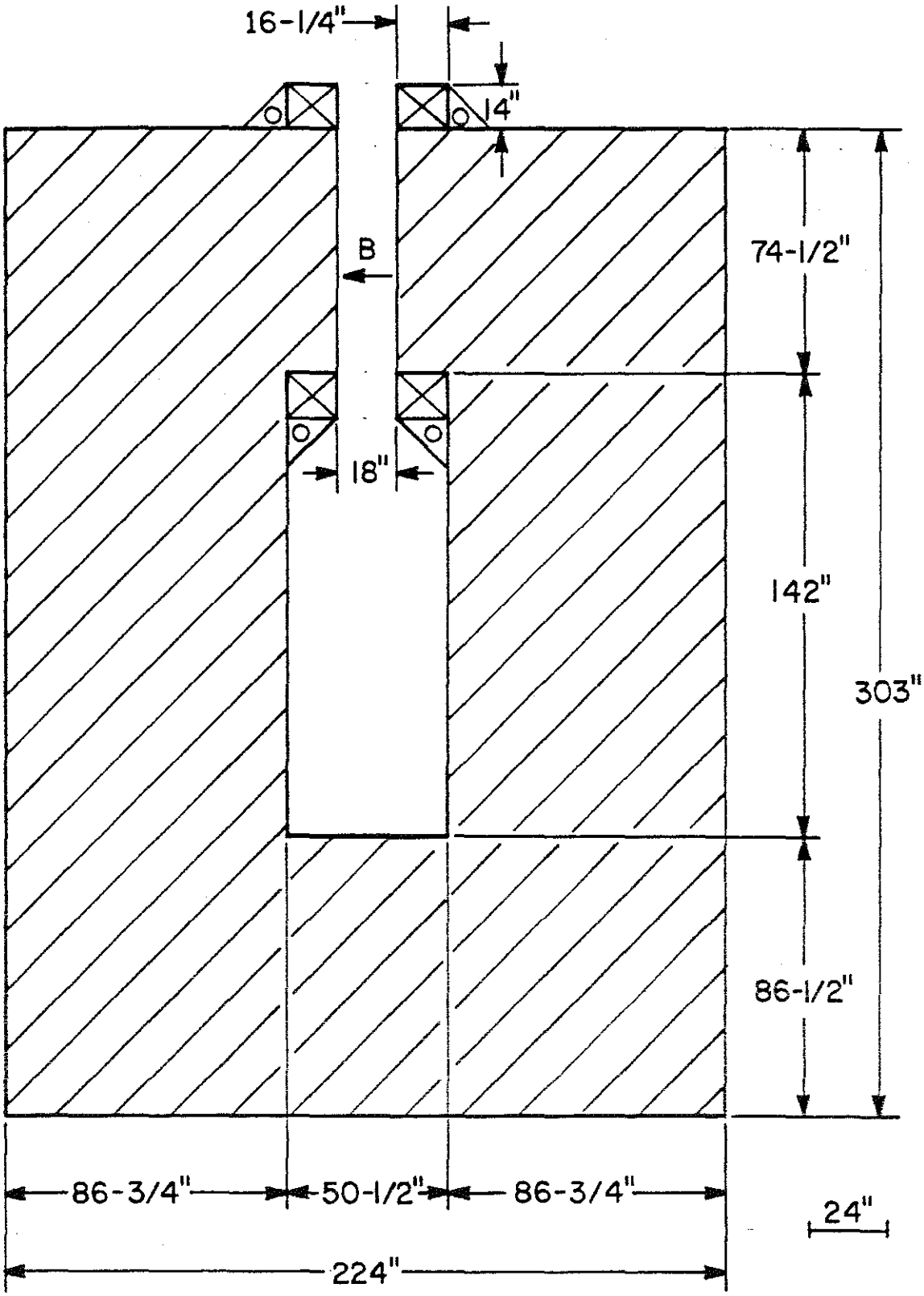

Figure 8

RADIATION LEVELS IN ENCLOSURE NCE (LAB F) AT 1 m BUBBLE - CHAMBER

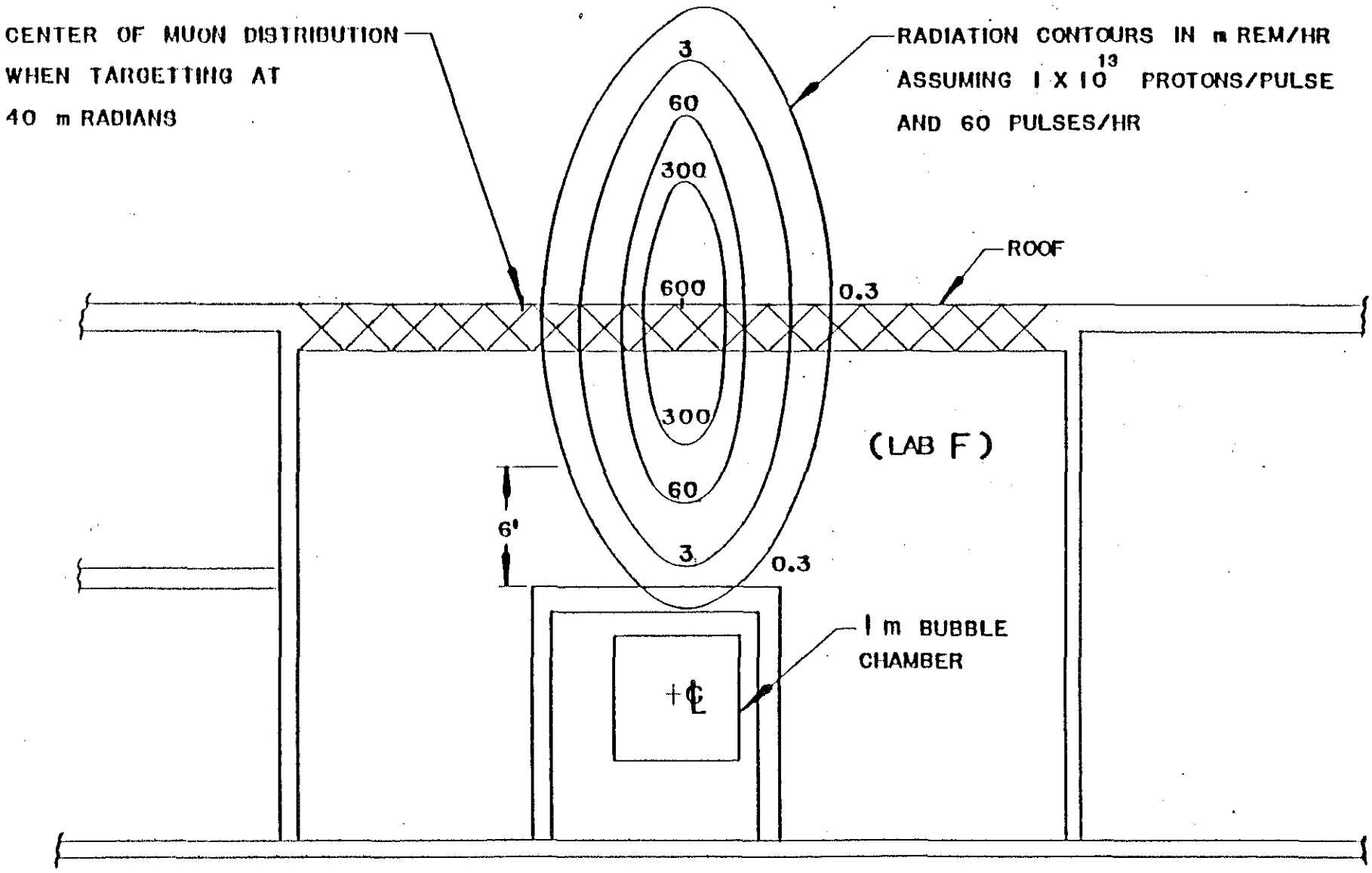

Figure 9

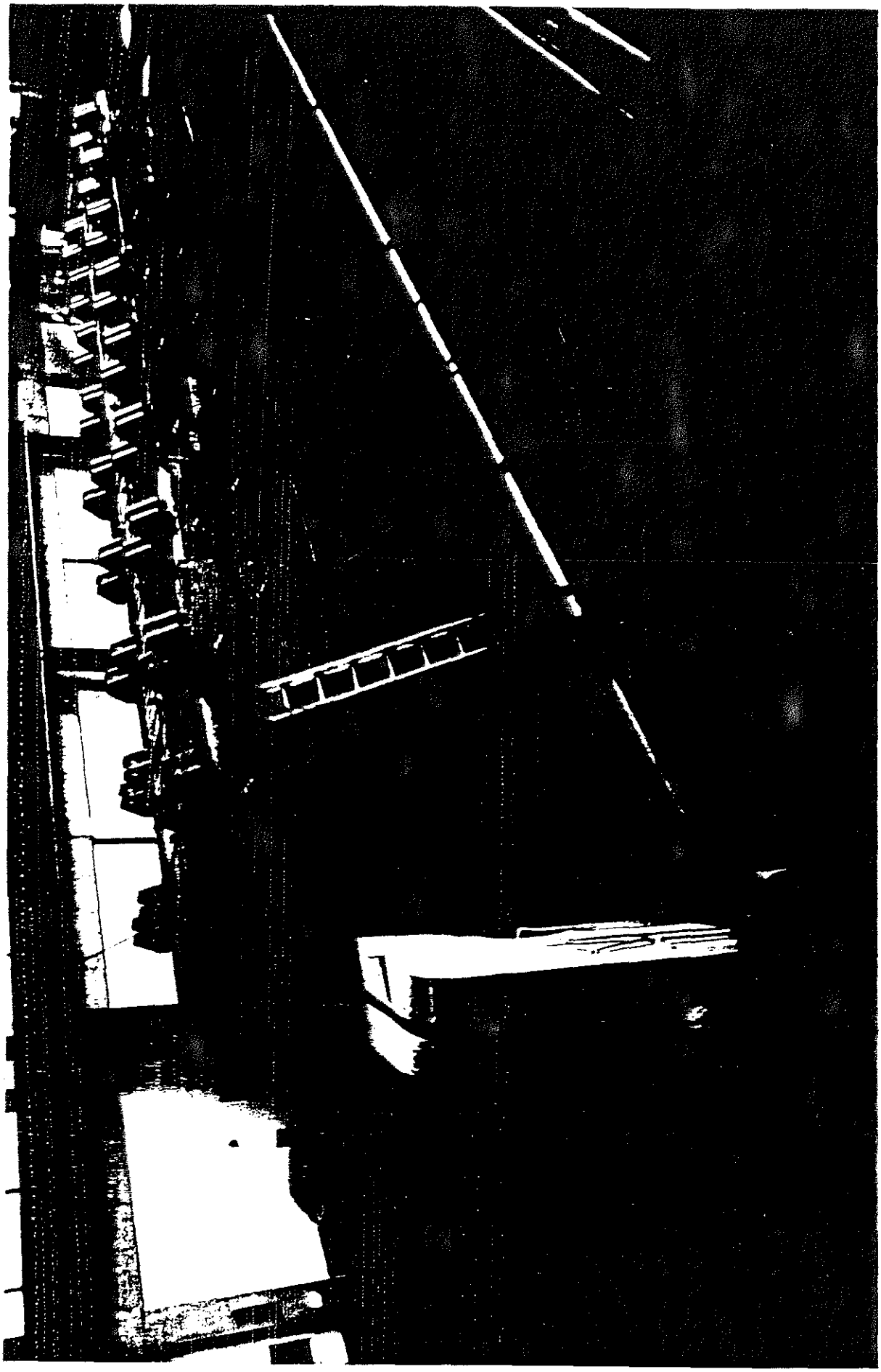

Fig. 10 2000-ton Dipole Magnet for E-605

IV

WORK BREAKDOWN STRUCTURE

1. Project Organization

This project will be conducted at Fermilab for the fixed target program and will be administered by the Research Division, which is responsible for the construction, operation, upgrade and maintenance of beamlines at the Laboratory. The organizational structure is given in Figure 1. The Laboratory Director is responsible to the University Research Association who operate the Laboratory under contract to the Department of Energy. The Laboratory Director with regulation from the Batavia Area Office works to develop the methods for meeting the Laboratory's programatic needs, as determined in part by the recommendations of Program Advisory Committee. To aid the Director in fulfilling the recommendations of the PAC, the Research Division develops facilities capable of carrying out the program. The Construction Engineering Services and Technical Support Group work closely with the Research Division to develop and construct the facilities required by the programmatic needs.

Within the Research Division, the project organization follows functional lines. The organization is shown in Figure 2. Under the overall coordination of the Beam Projects group, a team of individuals is assembled to develop the concepts and to implement the new facility. Specific expertise, related to beam transport, target systems and large magnets, is drawn from different departments in the Research Division. This group develops the design, cost estimates, technical specifications and schedules for all technical elements.

Through the Beam Projects Group, Construction Engineering Services (CES) is given specifications and schedules for technical elements, which in turn influence the specification of conventional construction that will domicile the technical components. CES manages all aspects of civil construction for the project through Title I, II and III.

The beam projects group also works with the Technical Support Group to develop costs and schedules for the spoiler magnets. Management of the procurement and construction of the large spoiler manget system will be carried out in the Technical Support Group.

2. Work Breakdown Structure

By organization, the project is broken into two general categories: civil construction and technical components. Cost estimates and schedules for civil construction are developed in CES. The beam projects group develops cost estimates and schedules for technical elements in consultation with the Technical Services Group. The factors that lead to this division among civil and technical components include type of contract, type of labor, location of work and sequence of timing.

The WBS breakdown at level three for Civil Construction & Technical Components are shown in Figures 3a and are illustrated in Figure 3b. Civil Construction is further broken into WBS level 4 and 5 elements shown in Figure 4a and 4b. WBS level 4 and 5 elements for technical components are shown in Figures 5a and 5b.

The cost detail is carried to the sixth level in the cost detail sheets shown in Appendix E and F and summarized to WBS Level 2.

The WBS breakdown at level five for technical components adheres to the component definitions for individual systems. Only two system types are used for the technical components: magnet systems and target systems.

In Figure 6a, we give WBS level three assignments for magnet systems. In Figure 6b, we give these assignments for target systems. Where common elements exist between the two system types we have used the same level three assignment: For example, water systems are .4 for both magnet and target systems.

ORGANIZATIONAL OVERVIEW

FOR THE DIRECT NEUTRAL LEPTON FACILITY

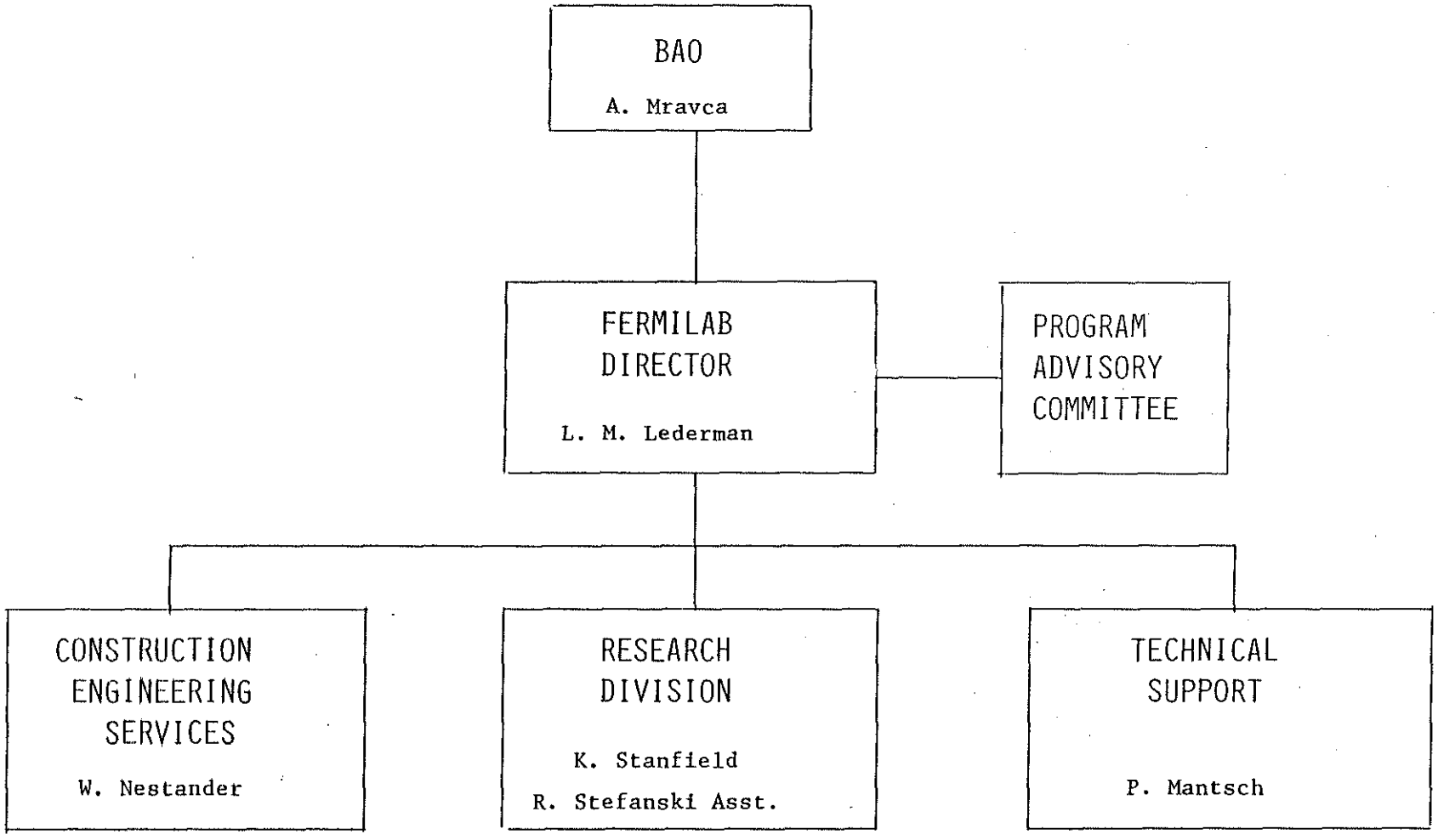

Figure 1

RESEARCH DIVISION

PROJECT ORGANIZATION

DIRECT NEUTRAL LEPTON FACILITY

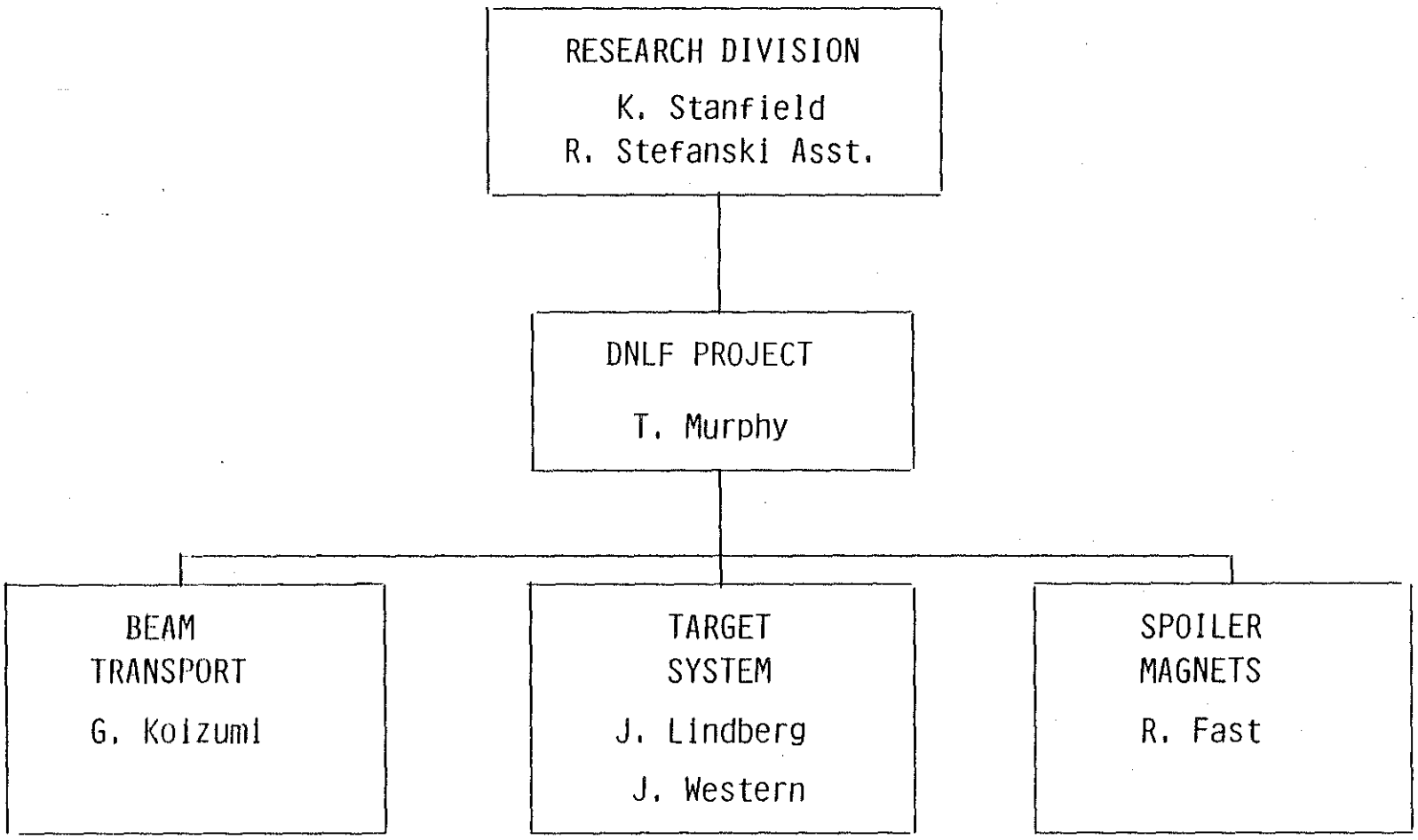

Figure 2

WORK BREAKDOWN STRUCTURE DIAGRAM

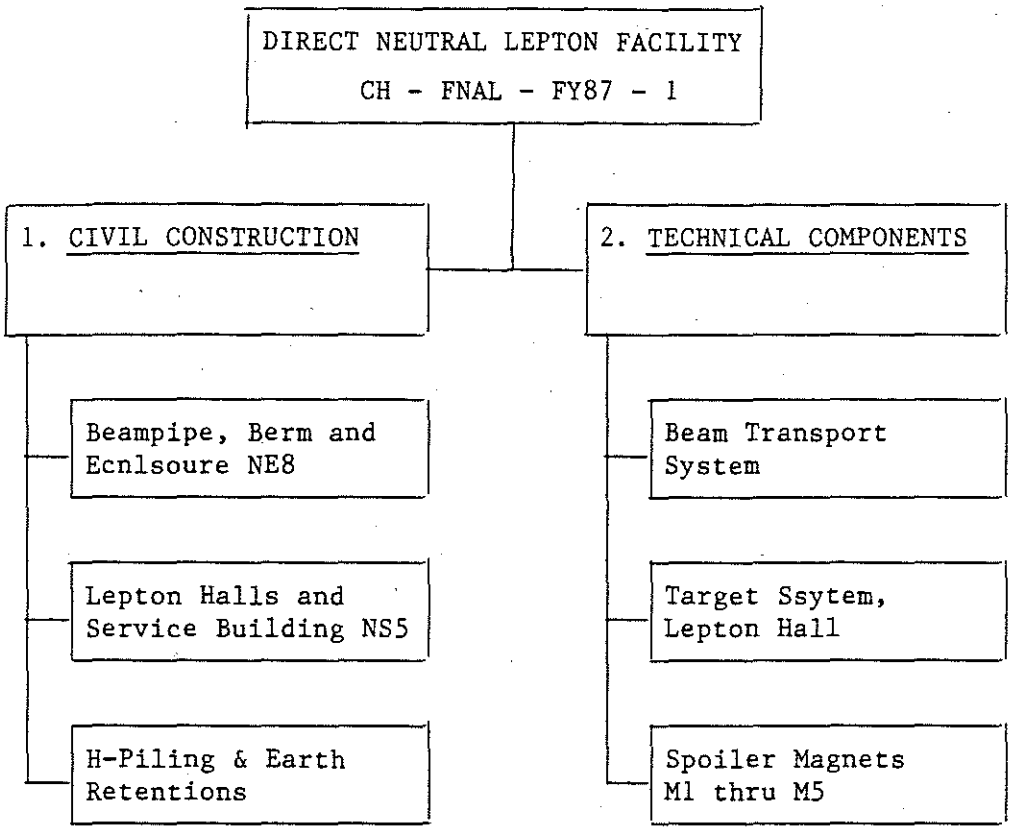

Figure 3a

WORK BREAKDOWN STRUCTURE (Level 4)

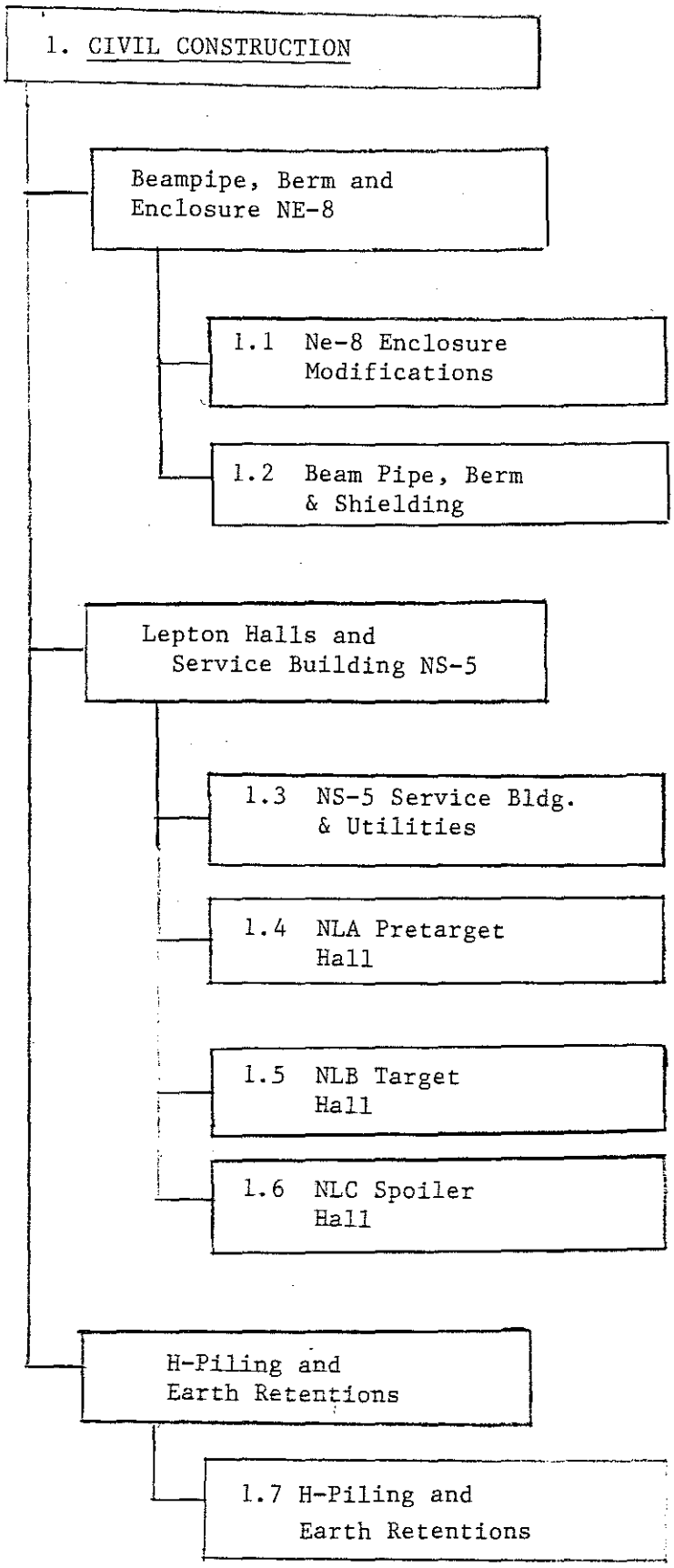

Figure 4a

WBS LEVEL 5 ASSIGNMENTS FOR CIVIL CONSTRUCTION

.1 SITE Utilities

.2 ROADS and Utilities

.3 EXCAVATION and Backfills

.4 EARTH Retention and Dewatering

.5 PROTECTION and Demolition

.6 PILE Foundations

.7 CONCRETE Structures

.8 STEEL Structures and Track

.9 ROOFING, Siding and Doors

.10 PARTITIONS and Finishes

.11 MECHANICAL and Plumbing

.12 ELECTRICAL Distribution

.13 CRANES and Sheild Door

.14 CONCRETE and Steel Shielding

.15 13.8 kv Primary Power

.16 OVERHEAD and Profit

.17 EDIA

WBS (LEVEL 4)

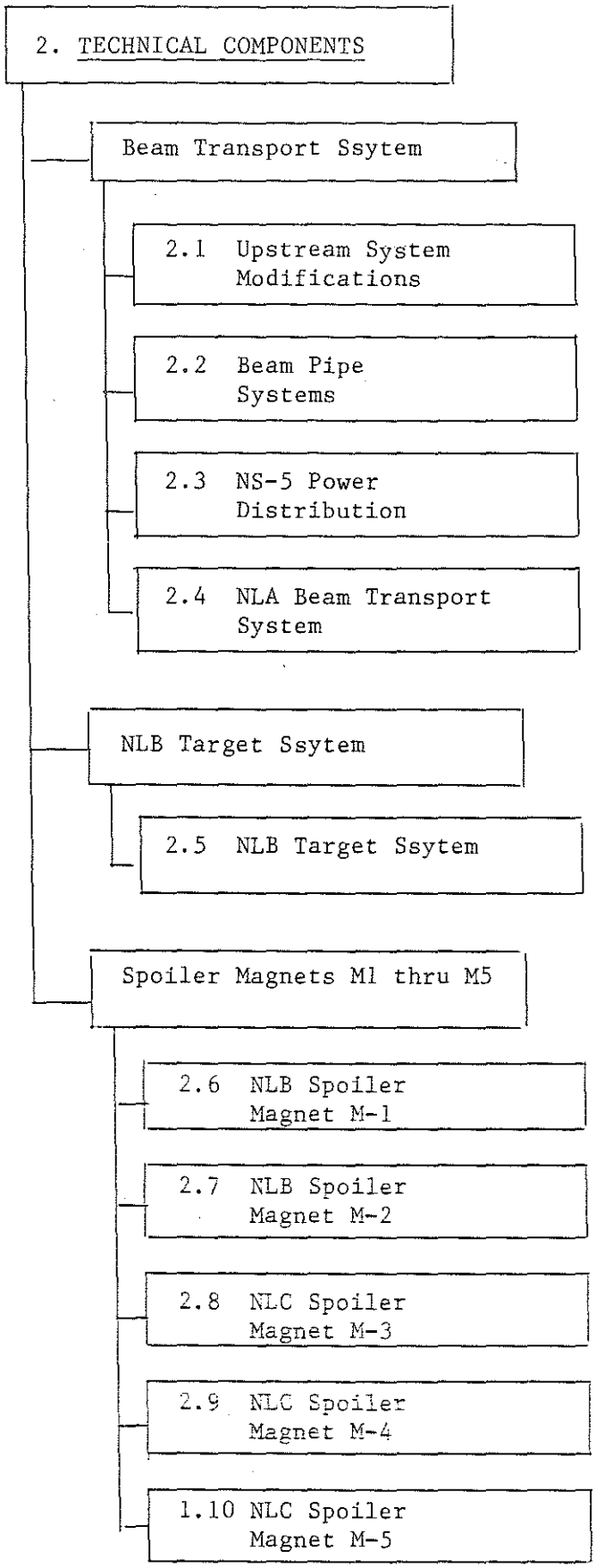

Figure 5a

WBS LEVEL 5 ASSIGNMENTS

FOR TECHNICAL COMPONENTS

		Magnet System	Target System
.1	Dipoles or steel	X	
.2	Quadrupoles or coils	X	
.3	Magnet stands	X	
.4	LCW (low conductivity water)	X	X
.5	Power supplies	X	
.6	Electrical systems	X	
.7	Control electronics	X	
.8	Radiation interlocks systems	X	X
.9	Beam instrumentation systems	X	
.10	Passive shielding	X	X
.11	Vacuum systems	X	
.12	Copper target		X
.13	Target transfer shield and transporter		X
.14	Target shield door and plug		X
.17	EDIA	X	X

X - Indicates WBS level 5 assignment to the system

Figure 5b

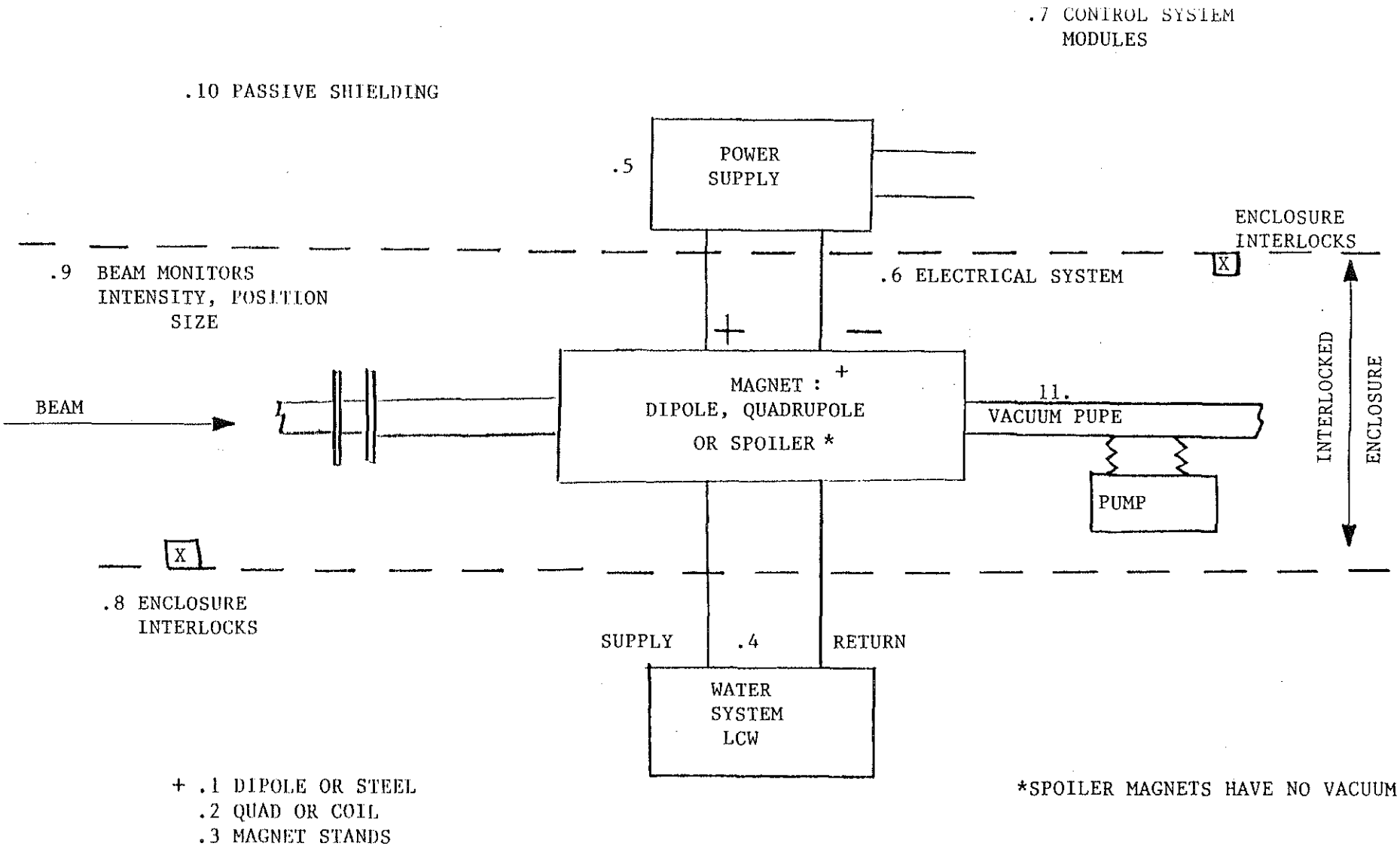

A MAGNET SYSTEM WITH WBS LEVEL FIVE ASSIGNMENTS

FIGURE 6a

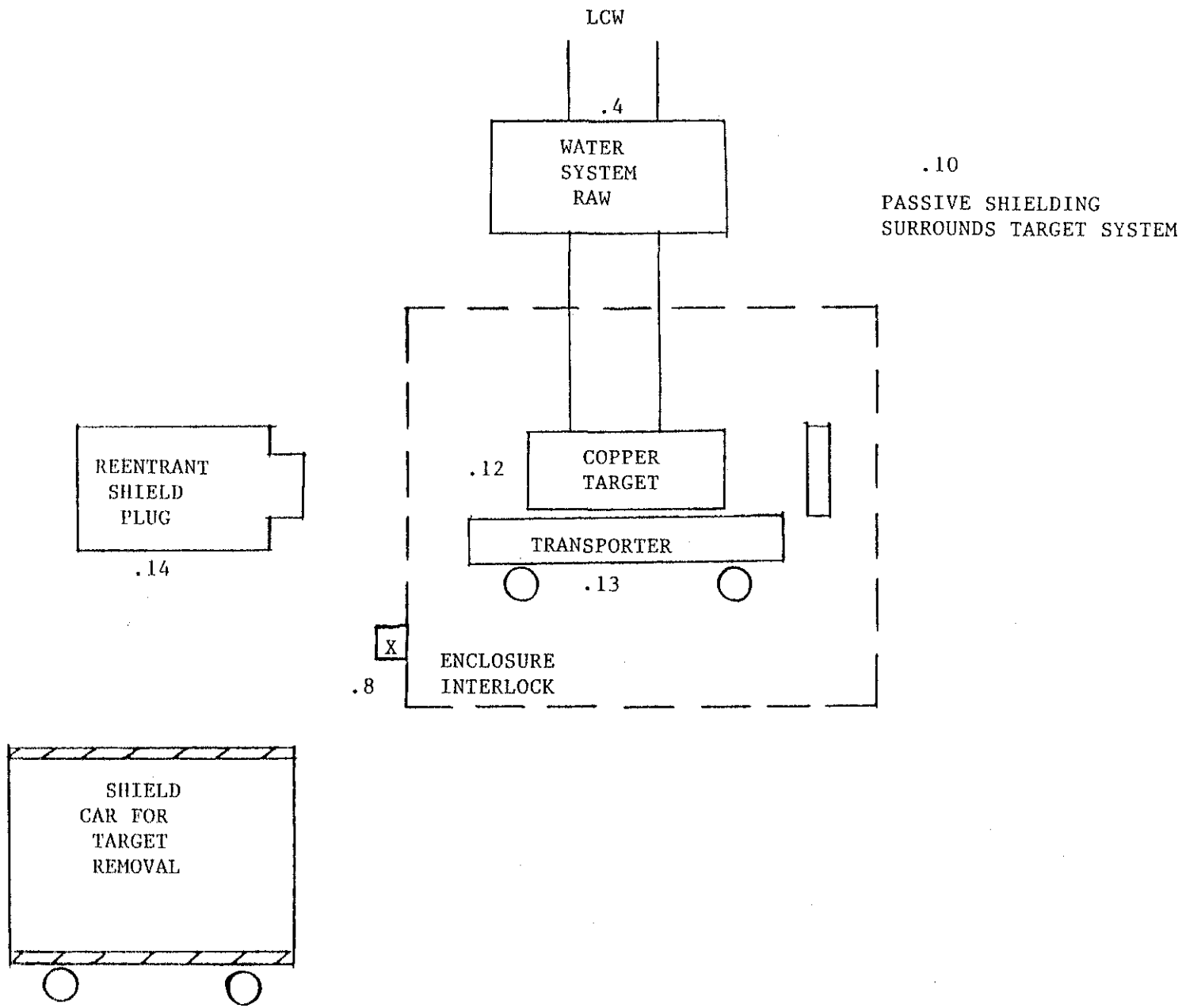

A TARGET SYSTEM WITH WBS LEVEL FIVE ASSIGNMENTS

FIGURE 6b

COST ESTIMATE

1.0 COST ESTIMATE OVERVIEW

The cost totals associated with the civil construction and with the technical components planned for the Direct Neutral Lepton Facility are listed below:

Description WBS Numbers	Start Construction	TOTAL with O & P	Escalation	TOTAL with Escalation	E.D.I.A.	TOTAL with E.D.I.A.	Contingency	TOTAL with Contingency
CIVIL CONSTRUCTION WBS 1.								
Beam Pipe, Berm & Enclosure NE-8 (WBS 1.1 & 1.2)	Oct. 1987	$ 701,000	$ 86,000	$ 787,000	$ 158,000	$ 945,000	$ 190,000	$ 1,135,000
Lepton Halls & Service Bldg. NS-5 (WBS 1.3 thru 1.6)	Aug. 1987	3,094,000	$ 515,000	3,609,000	721,000	4,330,000	865,000	5,195,000
H-Piling & Earth Retention (WBS 1.7)	Apr. 1987	267,000	46,000	313,000	62,000	375,000	75,000	450,000
(WBS 1. Subtotal)	--	($4,062,000)	($647,000)	($4,709,000)	($941,000)	($5,650,000)	($1,130,000)	($6,780,000)
TECHNICAL COMPONENTS WBS 2.								
Beam Transport System (WBS 2.1 thru 2.4)	Mar. 1988	1,248,000	127,000	1,375,000	275,000	1,650,000	330,000	1,980,000
Target System Lepton Hall (WBS 2.5)	Nov. 1987	482,000	49,000	531,000	109,000	640,000	130,000	770,000
Spoiler Magnets M-1 thru M-5 (WBS 2.6 thru 2.10)	Oct. 1987	4,956,000	480,000	5,436,000	1,084,000	6,520,000	1,950,000	8,470,000
(WBS 2. Subtotal)	--	($6,686,000)	($656,000)	($7,342,000)	($1,468,000)	($8,810,000)	($2,410,000)	($11,220,000)
TOTAL FACILITY - ALL WBS	--	$ 10,748,000	$1,303,000	$12,051,000	$2,409,000	$14,460,000	$3,540,000	$ 18,000,000

2. COST ESTIMATE SUMMARY - CIVIL CONSTRUCTION

WBS Level 2 and Construction Phase Totals (All Costs are in Dollars)

		NE-8 Encl. Modificat. WBS 1.1	Beam Pipe Berm&Shield WBS 1.2	NS-5 Serv. Bldg.& Util WBS 1.3	NLA Pretarg Hall WBS 1.4	NLB Targ. Hall WBS 1.5	NLC Spoiler Hall WBS 1.6	H-Piling & Earth Ret. WBS 1.7	TOTAL CONSTRUCTION WBS 1.-
.1	Site Utilities	$ 11,000	$ 3,000	$ 17,000	$ 2,000	$ 2,000	$ 8,000	$ 1,200	$ 34,200
.2	Roads & Utilities	4,000	4,500	4,500	16,600	5,600	5,700	2,000	42,900
.3	Excavations & Backfills	22,600	108,000	6,900	90,700	39,800	31,100	38,700	337,800
.4	Earth Retention & Dewater.	2,000	2,000	--	2,000	3,000	5,000	42,000	56,000
.5	Protection & Demolition	11,700	5,000	--	--	--	--	2,000	18,700
.6	Pile Foundations	--	--	--	--	--	--	128,100	128,100
.7	Concrete Structures	50,700	87,300	36,500	315,500	349,600	252,100	--	1,091,700
.8	Steel Structures & Track	900	--	16,400	23,800	34,500	134,600	--	210,200
.9	Roofing, Siding & Doors	--	--	17,400	--	--	88,400	--	105,800
.10	Partitions & Finishes	1,000	--	6,500	7,000	3,500	9,900	--	27,900
.11	Mechanical & Plumbing	4,100	238,200	265,800	50,900	41,000	40,700	--	640,700
.12	Electrical Distribution	3,900	5,000	70,100	23,400	10,500	92,100	--	205,000
.13	Cranes & Shield Door	--	--	--	--	60,000	65,000	--	125,000
.14	Concrete & Steel Shield.	--	54,800	--	--	132,500	--	--	187,300
.15	13.8 kv Primary Power	--	--	165,900	--	--	136,800	--	302,700
	Subtotal	$ 101,900	$ 507,800	$ 607,000	$ 531,900	$ 682,000	$ 869,400	$ 232,000	$ 3,532,000
.16	Overhead & Profit @ 15%	15,100	76,200	91,000	80,100	102,000	130,600	35,000	530,000
	Subtotal with O & P	$ 117,000	$ 584,000	$ 698,000	$ 612,000	$ 784,000	$ 1,000,000	$ 267,000	$ 4,062,000
	Subtotal Const. Phase	$ 701,000			$ 3,094,000			$ 267,000	$ 4,062,000
	Escalation (see Appdx. E,F)	86,000			515,000			46,000	647,000
	Subtotal with Escalation	$ 787,000			$ 3,609,000			$ 313,000	$ 4,709,000

3. COST ESTIMATE SUMMARY - TECHNICAL COMPONENTS (page 1 of 2)

WBS Level 2 and Construction Phase Totals (All Cost are in Dollars)

		Upstream Modifications WBS 2.1	Beam Pipe Systems WBS 2.2	NS-5 Sec. Power Dist. WBS 2.3	NLA Beam Transport WBS 2.4	NLB Target System WBS 2.5	Subtotal to Page V-4
.1	Dipole Magnets	$ 162,600	$ --	$ --	$ 372,100	$ --	$ 534,700
.2	Quadrupole Magnets	--	--	--	80,000	--	80,000
.3	Magnet Stands	7,000	--	--	29,400	--	36,400
.4	Low Conductivity Water Conn.	14,100	--	--	39,500	--	53,600
.5	Power Supplies	--	--	47,800	--	--	47,800
.6	Electrical Systems	15,800	--	75,800	106,600	--	198,200
.7	Control Electronics	--	--	8,400	--	--	8,400
.8	Radiation Interlock Systems	--	--	7,900	4,400	1,800	14,100
.9	Beam Instrumentation Systems	25,600	--	40,400	--	--	66,000
.10	Passive Shielding	--	--	--	--	336,600	336,600
.11	Vacuum Systems	100,600	60,000	--	50,000	--	210,600
.12	Copper Target	--	--	--	--	41,500	41,500
.13	Target Shield & Transporter	--	--	--	--	65,300	65,300
.14	Target Shield Door & Plug	--	--	--	--	36,800	36,800
	Subtotal	$ 325,700	$ 60,000	$ 180,300	$ 682,000	$ 482,000	$ 1,730,000
	Overhead & Profit (included is unit costs)						
	Subtotal Construct. Phase		$ 1,248,000			$ 482,000	$ 1,730,000
	Escalation (see Appx. E,F)		127,000			49,000	176,000
	Subtotal with Escalation (to page V-4		$ 1,375,000			$ 531,000	$ 1,906,000

3. COST ESTIMATE SUMMARY - TECHNICAL COMPONENTS (page 2 of 2)

WBS Level 2 and Construction Phase Totals (All Costs are in Dollars) * (Included in WBS 2.8)

		NLB Spoiler Magnet M-1 WBS 2.6	NLB Spoiler Magnet M-2 WBS 2.7	NLC Spoiler Magnet M-3 WBS 2.8	NLC Spoiler Magnet M-4 WBS 2.9	NLC Spoiler Magnet M-5 WBS 2.10	Subtotal from Page V-3	Subtotal from Page V-4	TOTAL TECHNICAL COMPONENTS WBS 2.-
.1	Spoiler Magnet Steel	$ 418,800	$ 627,700	$ 459,800	$ 789,800	$ 809,900	$ 534,700	$3,106,000	$ 3,640,700
.2	Spoiler Magnet Coils	66,800	73,600	149,000	226,900	261,900	80,000	778,200	858,200
.3	Spoiler Magnet Stands	--	--	42,900	12,900	12,900	36,400	68,700	105,100
.4	Low Conductivity Water Conn.	--	--	--	--	--	53,600	--	53,600
.5	Power Supplies		43,600	143,300	191,000	238,800	47,800	616,700	664,500
.6	Electrical Systems	--	--	95,900	*	*	198,200	95,900	294,100
.7	Control Electronics	--	500	8,400	500	500	8,400	9,900	18,300
.8	Radiation Interlock Systems	--	--	7,400	*	*	14,100	7,400	21,500
.9	Beam Instrumentation Systems	--	--	--	--	--	66,000	--	66,000
.10	Passive Shielding	22,300	250,900	--	--	--	336,600	273,200	609,800
.11	Vacuum Systems	--	--	--	--	--	210,600	--	210,600
.12	Copper Target	--	--	--	--	--	41,500	--	41,500
.13	Target Shield & Transporter	--	--	--	--	--	65,300	--	65,300
.14	Target Shield Door & Plug	--	--	--	--	--	36,800	--	36,800
	Subtotal	$ 507,900	$ 996,300	$ 906,700	$ 1,221,100	$ 1,324,000	$ 1,730,000	$4,956,000	$ 6,686,000
	Overhead & Profit (included in unit costs)								
	Subtotal Construct. Phase			$ 4,956,000			$ 1,730,000		$ 6,686,000
	Escalation (see Appx. E,F)			480,000			176,000		656,000
	Subtotal with Escalation			$ 5,436,000			$ 1,906,000		$ 7,342,000

4. METHODOLOGY - QUANTITY ESTIMATES AND UNIT COSTS

Quite similar methodologies have been used for both the civil construction and the technical components and are described below:

Work Breakdown Structure (WBS): The framework on which the cost estimate is organized is the WBS described in Section IV. The WBS divisions are based on many facets, including site location, component subassemblies, procurement packages and construction sequences. At this conceptual design period, the WBS is somewhat simplified, but the WBS will be revised and expanded as required during the Title I Design.

Technical Component Quantity Estimates: The physics goals, beam transport design and component preliminary design all define the quantities and types of components. The operational parameters associated with these components define the associated utilities and services and, in turn, the components required for such services. From all this data, detailed quantity lists are derived for tons of steel and copper, numbers of magnets and power supplies, thickness of shielding, lengths of cables, etc.

Civil Construction Quantities: The required physical sizes of enclosures, beam pipes, service buildings and equipment halls are based on the technical component quantities and, where applicable, the DOE General Design Manual 6430. Conceptual drawings are prepared and preliminary sizing of concrete walls, steel structures, earth berms, utilities, etc., is made. Conceptual system designs and quantity lists for utilities and services are similarly prepared.

Technical Component Unit Costs: Unit costs have been derived mainly from previous Fermilab experience on very similar procurements and installations. A number of large tonnage magnets have been recently built for various experiments, and cost data from both outside procurements as well as Fermilab fabrication is available. In addition, for these specific spoiler magnets, budget estimates from three commercial sources were obtained using detail part drawings of typical components. A conservative weighing of the unit cost data has been done to determine the actual unit costs used in the estimate.

Many of the components are standard items that have been previously bought or built by Fermilab for other beam lines. Both procurement and installation cost data has been updated to a uniform January 1985 base line for these unit costs.

Civil Construction Unit Costs: Sub-subcontractor bare costs for labor and material are derived from both published estimating services (Means, Richardson, January 1985, etc.) and from Fermilab estimate/actual bid history over the past 3-5 years. City cost indices for Chicago and Rockford, Illinois, are used for the Fermilab site.

Where construction items are similar and the information is applicable, cost comparisons are made to the DOE/MA 0063 Cost Guide Volume 6 and to the DOE Design Information Exchange System (DIES).

5. METHODOLOGY - APPLIED ESTIMATE INCREMENTS

The applied estimate increments include Subcontractor's Overhead and Profit, Fermilab Overhead, E.D.I.A., Escalation, and Contingency. Two of these items, Overhead and Profit and Escalation, relate to the general economic conditions in the construction area and to the perceived economic future during the project construction period. The other items, E.D.I.A. and Contingency, relate to the project design status and to the possible changes that may ensue as the design proceeds from conceptual to preliminary and final design and into construction.

Methodology for applying these increments to both Civil Construction and Technical Components is detailed below:

Subcontractor's Overhead and Profit: O & P is included at 15% for the civil construction and for the construction related installations of technical components. Fermilab experience over the past three year period has shown O & P ranging from 2% to 12% when computed from Fermilab bid estimates and the actual low bids of similar work.

Engineering, Design, Inspection, and Administration (E.D.I.A.): E.D.I.A. is included at 18% of the civil construction and conventional technical components. During the past three years, E.D.I.A. has ranged from 8% to 20% for the various Tevatron related construction projects. For beam line construction, particularly with a large constituent of remodeling and fitting around existing structures, the 18% is the figure of choice. For procurement of large technical components, involving detail design as well as fabrication and installation follow-up, 18% is also justified.

Escalation: Data from DOE-DHEP, January 1985 is used for all escalations. For the 1985-1988 construction (assuming 1987 equals 1988), annual rates are 4.2%, 4.8%, 5.8%, and 5.8%. For 1985-1988 capital equipment, annual rates are 1.6%, 4.0%, 5.1%, and 5.1%. Computations are detailed in the Appendix E.

Contingency: Contingencies are applied to the escalated costs including E.D.I.A. Approximately 20% is used for the civil construction and the more conventional technical component items. This percentage is justified due to the development of this conceptual design which may be considered a pre-Title I document for cost estimate accuracy.

Approximately 30% contingency is used for the spoiler magnets, since greater uncertainties are presumed in these designs.

VI

ENGINEERING AND CONSTRUCTION SCHEDULES

1. CONSTRUCTION PHASES - CIVIL

The civil construction work is divided into two groups; the work that may proceed independent of the experimental operations, and the work that may be done only when there are no experimental operations in the area. The first two phases described below are independent of operations, while the third phase is not.

The scope of these construction phases, together with the relative WBS Number, is outlined below:

Phase 1 (WBS 1.7) H-Piling and Earth Retention (Start Spring 1987)	Excavation for the Lepton Halls, NLB Target Hall and NLC Spoiler Hall. Installation of sheet piling and H-piling.
Phase 2 (WBS 1.3-1.6) Lepton Halls & Serv. Bldg. NS-5 (Start Summer 1987)	Major construction of Lepton Halls NLA Pretarget Hall, NLB Target Hall, NLC Spoiler Hall and Service Bldg. NS-5. Extension of utilities and services and installation of substations and LCW cooling systems.
Phase 3 (WBS 1.1-1.2) Beam Pipe, Berm & Encl. NE-8 (Start Fall 1987)	Modification of Beam Enclosure NE-8, installation of beam pipes, construction of concrete retaining walls by existing beam enclosures and relocation of existing substation.

2. CONSTRUCTION PHASES - TECHNICAL COMPONENTS

A series of major procurement or fabrication subcontracts followed by installation subcontracts is used for the technical components.

Early material procurement of hollow coil conductor and unfinished steel magnet plate is necessary for the timely fabrication of the spoiler magnets and the target station box. The procurements will start approximately one month after funding is available. Fabrication subcontracts will follow as engineering and design work is completed and material is delivered. Numerous other procurement subcontracts for other beam line items will occur during this same period.

Several rigging and installation subcontracts will be used for installation work as Beneficial Occupancies are attained in the buildings.

3. CONSTRUCTION SCHEDULES

The construction bar chart and milestone schedule on the following page define the relationship of the civil and technical component construction. The key milestones listed show completion of the project in a two year period.

For the civil construction, the schedule is based on the following:

Five day work week, one 8-hour shift per day.

Normal size, cost efficient work crews.

Conservative allowance included for winter protection due to inclement weather.

Conservative allowance included for the tight access conditions and construction interfaces with the existing experimental facilities in the work areas.

For the technical components, the schedule is based on the following:

Conservative estimates for manufactured and fabricated items based on previous Fermilab experience with vendors producing similar items.

Normal size, cost efficient installation work crews.

Five day work week, one 8-hour shift per day for most of installation work, except as listed below.

Five day work week, two 8-hour shift per day installation during steel erection and coil placement work for M-3, M-4 and M-5 magnets in the Spoiler Hall.

Only the Beam Pipe, Berm and Enclosure NE-8 construction work, together with the related beam line installation, is dependent on Fermilab fixed target operations schedules. These construction schedules will be modified to suit the Fermilab operations as these plans are developed during the coming year.

FERMILAB SCHEDULE	PROJECT TITLE	NO.	DATE	REVISION DATE	PAGE
	DIRECT NEUTRAL LEPTON FACILITY CONCEPTUAL DESIGN STUDY - SCHEDULE	8-2-77	13 MAY 85		1/1

DESCR 4.0

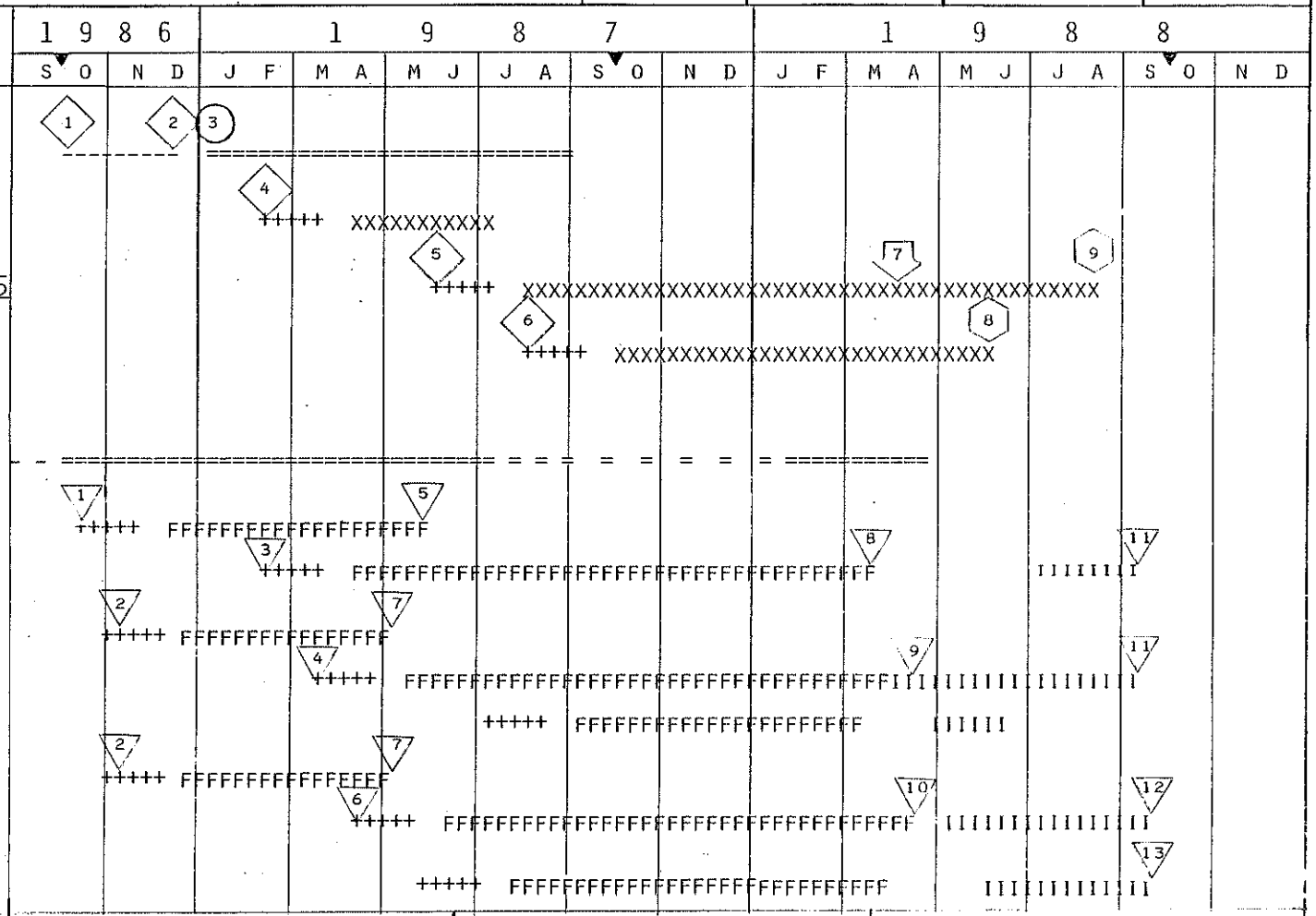

CIVIL CONSTRUCTION MILESTONES WBS 1

1. START TITLE I ENGINEERING & DESIGN. (OCTOBER 1, 1986)
2. SUBMIT TITLE I DESIGN REPORT. (DECEMBER 15, 1986)
3. APPROVE TITLE I DESIGN REPORT. (JANUARY 10, 1987)
4. RELEASE IFB FOR H-PILING & EARTH RETENTION. (FEBRUARY 15, 1987)
5. RELEASE IFB FOR LEPTON HALLS & SERV. BLDG. NS-5. (JUNE 1, 1987)
6. RELEASE IFB FOR BEAM PIPE, BERM & ENCL. NE-8. (APRIL 1, 1987)
7. PARTIAL BENEFICIAL OCCUPANCY IN LEPTON HALLS. (APRIL 1, 1988)
8. BEAM PIPE, BERM & ENCL. NE-8 COMPLETE. (JUNE 1, 1988)
9. LEPTON HALLS & SERV. BLDG. NS-5 COMPLETE. (AUGUST 15, 1988)

TECHNICAL COMPONENT MILESTONES WBS 2

1. RELEASE RFP FOR COIL CONDUCTOR (OCTOBER 10, 1986)
2. RELEASE RFP FOR MAGNET & TARGET BOX STEEL PLATES. (NOVEMBER 1, 1986)
3. RELEASE RFP FOR COIL WINDING & FABRICATION (FEBRUARY 15, 1987)
4. RELEASE RFP FOR MAGNET STEEL FABRICATION. (MARCH 15, 1987)
5. DELIVER COIL CONDUCTOR COMPLETE. (JUNE 1, 1987)
6. RELEASE RFP FOR TARGET BOX STEEL FABRICATION. (APRIL 15, 1987)
7. DELIVER UNFINISHED CASTER STEEL PLATES (MAY 1, 1987)
8. DELIVER SPOILER MAGNET COIL ASSEMBLIES. (MARCH 15, 1988)
9. DELIVER SPOILER MAGNET FABRICATED STEEL PLATES. (APRIL 15, 1988)
10. DELIVER TARGET BOX FABRICATED STEEL PLATES. (APRIL 15, 1988)
11. SPOILER MAGNET & COIL ASSEMBLY COMPLETE. (SEPTEMBER 15, 1988)
12. TARGET BOX STEEL ASSEMBLY COMPLETE (SEPTEMBER 15, 1988)
13. BEAM LINE AND SERV. BLDG. INSTALLATION COMPLETE. (SEPTEMBER 15, 1988)

LEGEND

OOOO OPERATIONS TIME — — — CONCEPTUAL DESIGN ==== FINAL DESIGN + + + + BID TIME XX. NSTRUCTION ME FFFF PROCUREMENT TIME IIII INSTALLATION TIME (2) MI NE NO.

5. SCHEDULING METHODOLOGY

The one principal ingredient of most schedules that has greatest impact is previous experience on similar work. The experience factor has many facets, including:

Type and condition of construction site.

Type of work to be done.

Mentality and outlook of subcontractors or fabricators who may do the work.

Familiarity with local seasonal conditions.

Performance of Fermilab engineering and design staffs.

Familiarity with pertinent local and long distance transportation.

Knowledge of the construction and manufacturing techniques required.

Performance of Fermilab supervisory and installation staffs.

Characteristics of operational modes used at Fermilab.

There are few, if any, handbooks available to assist in preparing schedules for a project like the Direct Neutral Lepton Facility. The collective experience of many Fermilab staff must be individually sought out and collectively integrated into a final schedule. This has been done.

CHAPTER VII

Project Validation Checklist

May 1985

FY1987 Fermilab Direct Neutral Lepton Facility

Project Validation Check List

I. Objectives

The project objectives and performance parameters have been developed to support the programmatic needs and goals in the Laboratory: To exploit the availability of the Tevatron (the highest energy accelerator in the world) for the high energy fixed target program. To advance the state of high energy physics and particularly, to explore the existance of the tau neutrino.

II. Scope

II.A. Requirements

II.A.1 Facility Performance Requirements

Fermilab has kept both the High Energy Physics Program Office and the Batavia Area Office fully informed of the recommendations of its Program Advisor Committee. There is mutual understanding of the programmatic needs for the Direct Neutral Lepton Facility and the buildings to house it.

II.A.2 General Facility Requirements

The general requirements for the facility both in terms of buildings and technical systems have been defined in quite some detail at the conceptual level of design. Materials documenting these issues have been distributed to the Validation Review Committee.

II.A.3 Evaluation of Seismic and Tornado Hazards

The total estimated cost of this project includes the cost of those measures necessary to assure the facility will comply with DOE 6430.1. The facility is designed to

operate in conditions prevailing in the area. The site is equipped with a tornado warning system. The area below grade at NLC will provide an adequate tornado shelter area.

II.A.4 Safeguards and Security Requirements

Advice and guidance from cognizant safeguards and security personnel will be utilized during the project planning and design stages.

II.A.5 Location

The location of the Direct Neutral Lepton Facility takes advantage of the proximity of four existing detectors (in Lab B, C, E and F) that will carry out experiments with the beam generated at the facility. Any other location would incur the cost of duplication of these detectors. Other considerations included basic civil engineering requirements to support the building, availability of a power and water distribution systems and least impact on the ecology at the site.

II.A.6 Function Definitions

Functions of all major structures, systems and components are defined, to the extent appropriate for a conceptual design.

II.A.7 Matching of Existing Facilities to Demands

To the largest extent possible, available utilities, roads and accesses and other support facilities have been taken into consideration to minimize costs and optimize functionality.

II.A.8 Initial Complement of Equipment

Plant funds cover all buildings and those technical systems associated with the primary beam. These technical systems include the target and target pile. Equipment funds included in the project will provide for all systems downstream of the target pile, including the five spoiler magnets and their utilities and controls. Fermilab is a

major producer of magent systems, and equipment cost estimates are based on Fermilab experience and current market prices.

II.A.9 Quality Levels & Program Requirements

The programmatic requirements have been studied, and given in detail in Chapter I and III of this report.

II.A.10 Emissions and Wastes

Emissions and wastes will be those which are characteristic of beam enclosures and experimental halls. Presently, the experimental areas generate small quantities of waste descaler which is used to clean closed loop water systems. Total compliance with Federal and State emission and waste regulations will not be a problem.

II.A.11 Codes and Standards

The facility can operate within applicable local, state and national codes and standards.

II.A.12 Office Space

There is no office area included in this project.

II.A.13 Space Requirements

Space requirements are only for current needs.

II.B Design (Conceptual, Title I, Title II)

II.B.1 Design Status

All designs, at this point, are at the conceptual level. In all cases, however, detailed studies have been made based upon current experiences, appropriate systems catalogs, systems price lists, and general civil engineering practices. All major items have been so scoped

and the civil engineering Title I Procedures may be started immediately. Furthermore, appropriate detailed specifications of the facility may also be described starting immediately.

II.B.2 Site Conditions

Soil borings are available for sites adjacent to sites considered. (Fermilab has over 900 borings on site). Adjacent construction experience has been used to prepare cost estimates.

II.B.3 Safety Hazards and Risks

Hazards and risks will be those which are characteristic of beamline enclosures. Radiation hazards will be controled in accordance with OSHA and DOE requirements and are specified in the Fermilab Radiation Safety Guide. A detailed safety evaluation has not been performed on the proposal facility, but no unique hazards are expected. A Safety Analysis Report (SAR) will be prepared before facility operation.

II.B.4 Solar Energy Applications

Solar energy has been considered as a source of heating in part for the buildings. At the conceptual design stage, the functional aspects of the building bias against use of solar applications. A detailed analysis will be made as part of the Title I work effort. Also, redistribution of the heat removed from the magnets for heating the fuilding will be studied in depth.

II.B.5 Design Cost Effectiveness

Design is cost effective at a conceptual design level. More in depth studies will be carried out in parallel with Title I work.

II.B.6 Environmental Assessment

The environment surrounding the proposed construction sites has been characterized to the extent that the entire

Laboratory site is characterized. Topology, hydrology, and contamination levels are documented. The impact of the proposed facility on the environment has not been assessed, but no unique hazards are expected.

II.B.7 Prerequisite R&D

The necessary R&D required to adequately design and specify the systems and the facility has been done. This is an activity which is a continuing activity out of normal operating expenditures. These activities will continue and help refine the requirements documents and other efforts that go into specifying and accomplishing the construction of the building and acquisition of the technical systems.

II.B.8 Participants

The conceptual designs presented to the Validation Review Committee have been prepared by Fermilab staff members. In particular, staff members from the Construction Engineering Services Section, Safety Section and the Director's Office have participated in this design.

II.B.9 Uncertainties

The contingency analysis assigns relative weight to various aspects of the project based on uncertainty with regard to cost. The largest total dollar uncertainty rests with the spoiler magnet steel procurement, fabrication and installation. The largest percentage uncertainty is assigned to the use of trades people for the installation of technical elements.

II.B.10 Energy Conservation Report

The Energy Conservation Report will be prepared as part of the Title I effort.

III. Schedule

All of the following factors have been considered at a depth appropriate at this conceptual design level in developing this schedule.

- budget cycle timing
- contractor selection durations
- Headquarters reviews and approvals
- prerequisite R&D schedule constraints
- dependency upon timing and amount of operating funds
- historical experience on design, procurement, and construction durations
- development of Environmental Impact Statement
- procurement lead times for equipment (particularly reflecting vendor quotes)
- logical sequence of design, procurement, and construction
- reasonable manpower levels, buildup and ramp down
- reasonable obligation and costing rates
- shift work or overtime work requirements
- work place space constraints
- exposure constraints

IV. Estimate

IV.A General

IV.A.1 Estimate Preparation

The estimates presented were prepared in August 84, with major revisions in April & May 85. Escalations are shown.

IV.A.2 Estimate Basis

Estimates are based on preliminary engineering calculations for scope and quantity takeoffs, experience on several very similar construction jobs at Fermilab within the past two years, and standard cost estimate data.

IV.A.3 Support of Estimates

Vendor quotes are not appropriate at conceptual level.

IV.A.4 Contingency

The contingency reflects confidence in the scope of the project.

IV.A.5 Escalation

Escalation rates are shown, and relate to published DOE data. Previous experience of last two years have shown DOE data to be high for this area.

IV.A.6 Project Review

The cost estimates have been reviewed by several people within the Fermilab construction efforts. Major update was incorporated in April & May 85.

IV.A.7 Uniqueness

No unique construction or fabrication practice is anticipated for this project.

IV.A.8 Estimating Guides

Conventional construction items and technical system estimates were made using standard estimating guides.

IV.A.9 Indirect Costs

All known indirect costs have been included in the estimates.

IV.A.10 Title I/Title II Estimates

N/A

IV.A.11 Experimental Components

All required experimental components costs are included in the technical system cost estimates.

IV.A.12 Procurement Strategy

The proposed schedule, documents the procurement strategy.

IV.B Construction

IV.B.1 Bulk Materials

Both engineering estimates and past experience were used to estimate the bulk material quantities.

IV.B.2 Quantity Growth Allowances

Normal estimating methods for conceptual estimates allow for quantity growth.

IV.B.3 Bulk Material Pricing

The bulk material costs are current and reflect local conditions.

IV.B.4 Labor Costs

Labor costs are estimated at local rates and include applicable fringe and other hidden costs.

IV.B.5 Equipment Pricing

Equipment pricing is based upon recent actual experience, catalog prices, market conditions or standard price reference material.

IV.B.6 Special Process Spares

Some items will be bought out of Special Process Spares. These costs are included in the TEC.

IV.B.7 Indirect Costs

Indirect construction costs have been included.

IV.B.8 Labor Productivity

Labor productivity is based on much local experience.

IV.B.9 Labor Availability

Labor is very available in Chicagoland area.

IV.B.10 Pricing Variants

To the extent required for conceptual design, the cost estimates relfect code, QA scheduling, climatic and geographic requirements.

IV.C Engineering and Management

IV.C.1 Contractor Project Management

Contractor project management and engineering costs are included in the estimate.

IV.C.2 E, D & I Estimate

The E, D & I costs are estimated on a percentage of construction costs and on previous experience.

IV.C.3 Inspection

At the conceptual design level, inspection and QA/QC costs have been included.

IV.C.4 Management

The management system responsible for this activity is mature and experienced. There are no overlapping responsibilities.

V. Funding and Cost Status

V.1 Planned Schedule

The programmatic needs for the facility are defined by the recommendations of the Program Advisory Committee (PAC) and the schedule of experiments developed by the Fermilab Program Planning Office. The PAC has endorsed the DNLF as among the highest priority projects in the fixed target program. The schedule for construction coincides with the program schedule. The DNLF will support the neutrino program after 1988, and could well lead to some of the more fundamental physics discoveries made at Fermilab such as the tau neutrino.

V.2 Other Associated Project Costs

Annual operating costs for the facility are $1.9 M, and include power and personnel. This facility will operate after the conventional neutrino program ends. The incremental operating costs will be about $0.4 M. Capital equipment not related to the facility but related to the programmatic effort is $0.2 M per year.

V.3 Authorization

Full authorization is appropriate for the conceptual design as it exists today. Both the buildings and technical system are well enough understood to proceed with full authorization.

V.4 Funding Consistency

The annual funding proposed is consistent with the realistic project schedule. 80 percent of project funds will be committed in the first year of the project.

V.5 Continuing Resolution Alternatives

In the event of a Continuing Resolution, if the DOE is not in a position to reprogram funds to this end, the impact on the laboratory program will be to delay experiments that will use this facility.

V.6 Contributory Funding

Many of the normal laboratory operations will support the design.

Appendix C

Magnet Design Study

I. Introduction

This appendix is an updated version of TM-1155, by C. Baltay, et al. (October, 1982), which was the original design report for this facility. Outdated sections have been deleted, and a new section describing the redesign to 900 GeV incident protons has been added. (TM-1155 was a design for 1000 GeV incident protons.) The appendices to TM-1155, which contain the actual equations used in the Monte Carlo programs, have also been omitted.

The main technical challenge in the design of the Direct Neutral Lepton Facility is the magnetized muon shield. Muon backgrounds have been calculated by three independent computer programs at Columbia, Fermilab, and MIT. The calculated background fluxes are satisfactory in all of the detectors that might use the facility (i.e., the Tohoku and 15 Foot Bubble Chambers, as well as counter detectors located in Lab E and Lab C). The spoiler design includes a conventional iron magnet system with an air gap in the central regions of high muon flux. Detailed engineering design has been carried out by various departments at Fermilab on this design including detailed calculations of the magnetic field shapes and estimates of costs.

To check the reliability of the programs used in the design of the muon shield, we have calculated the background muon fluxes in the E-613 muon shield in the Meson Lab for a variety of conditions. We found that the agreement between the measured fluxes and the fluxes calculated by the three independent programs is quite satisfactory. These results were reported in June 1982 to the Fermilab Directorate. The programs reproduce satisfactorily the detailed distributions of the muon flux measured by E-613 at the end plane of the iron shield and at the front face of the detector. The programs also permitted a calculation of a factor of ~5 reduction in the muon flux measured with the modified version of the shield used in the spring 1982 run of E-613. In fact, this reduction factor was predicted by one of the programs before the shield was modified and the fluxes were measured. We therefore have confidence that the programs give realistic results to within a factor of two. In view of the safety factor of ~10 in the design for the 15 Foot and Tohoku chambers, this seems quite satisfactory.

In Section II of this report we describe in detail the three Monte Carlo programs used in these calculations. In Section III we give the details of the flux calculations for the E-613 shield and the comparisons with the observed fluxes with various configurations of the shield. In Section IV we describe the designs that have been developed for the neutrino area shield. The 1984 redesign to 900 GeV incident protons is described in Section V. In Section VI we discuss the problem of proton beam transport loss and the associated muon fluxes.

II. Description of the Monte Carlo Programs

The difficulties and uncertainties in predicting the background muon rate leaking through an active muon shield for a beam dump experiment are by now well known. In order to increase confidence in the design of a Tevatron beam dump facility each experimental group with Program Advisory Committee approval as well as the design group within Fermilab have developed a program for this calculation. The three programs have been written independently, though discussions between the groups have frequently contributed to the understanding of the effects involved.

The following sections will discuss the various effects included in the three programs. Detailed equations are included in an appendix to TM-1155.

Each of the three programs takes a different approach to the calculation of muon production by protons incident on a heavy target. The Columbia and Fermilab programs treat muon production in two stages: pion production and either pion decay or direct muon production expressed as a fraction of pion production. The MIT program directly expresses muon production from all sources.

The pion production formulas used in the Columbia and Fermilab programs derive from the radial scaling fits to pion production data from many $p\ p \rightarrow \pi^{\pm}\ X$ experiments at various energies up to 400 GeV. These fits extend to a P_t of 6 GeV/c for π^+ and somewhat lower for π^-. In the Fermilab program a correction is made to give agreement with ISR data at still larger P_t, out to 10 GeV/c. Since radial scaling gives excellent fits to data over a wide range of incident proton energies, it is expected that the interpolation to 1 TeV will be satisfactory.

The calculation of pion decay to muons in a material of given interaction length is straight forward. The ratio of direct muon production to pion production has been measured in several experiments at Fermilab. The general result is that the μ/π ratio is independent of P_t at small x and falls with x as a power of (1-x). The Columbia formula uses $(1-x)^3$ and the Fermilab program $(1-x)^2$. Either form gives a reasonable fit to the measurements.

The product of pion production and either the pion decay probability or the μ/π ratio gives the rate of muon production by the primary proton beam. In a thick target such as the beam dump re-interaction of produced pions and protons are an important contribution to the total. The Columbia program carries out a shower Monte Carlo for each production interaction. In this calculation secondary pions are allowed to interact and produce either more pions or direct muons. The Fermilab program uses an enhancement factor as a function of p_π/p_{beam} that is derived from a separate shower Monte Carlo calculation.

This calculation allows secondary pions to interact as in the Columbia program, but in addition one forward secondary nucleon is

generated and allowed to interact. This calculation follows the shower to a depth of 3 in the pions and 6 in the nucleons.

Finally, both the Columbia and Fermilab calculations must correct from production in pp collisions to that in pA collisions where A may be Be, Fe, Cu, or W. For this purpose an approximate A dependence of the pion invariant cross sections as given by L. Voyvodic is applied. In addition, the μ/π ratio should increase as $A^{0.2}$ since pion production rises more slowly than direct muon production.

The MIT program does not attempt to determine muon production from a stepwise calculation but relies instead upon a fit to total muon production from a W target as generated by W. Busza. That formula includes both direct and decay muons from all generations of the shower in a thick target. Figure II-1 shows the total muon production rate as a function of momentum from 400 GeV protons incident on iron. In Figure II-2, the rate has been scaled to tungsten.

All three of the programs under discussion make use of standard techniques to follow the central trajectory of a produced muon from the target through the absorbers and magnets of a particular shield design. The Columbia and Fermilab programs generate initial muon momenta and directions randomly and weight according to the production spectrum discussed above. The MIT program proceeds more systematically, stepping in P_t and p until all of phase space is covered. Comparisons of trajectories for particular initial conditions have indicated good agreement among the programs in the calculation of magnetic bending.

A muon that would not strike the detectors if it were not deflected may nonetheless produce a hit if it undergoes one of a number of processes along its path. The first such process considered in the programs is multiple Coulomb scattering. In the Columbia and MIT programs Coulomb scattering is normally treated by calculating the undeflected ray and determining where it would strike the plane of a detector. The total Coulomb scattering angle is calculated and the probability of a hit by this central ray is determined by an integration of the 2-dimensional scattering probability distribution over the area of the detector. In contrast, the Fermilab program changes the direction of a muon according to the Coulomb scattering distribution appropriate to the thickness of material traversed in one step of the path integration.

An important observation is that for large thickness, such as the entire dump, a Gaussian distribution is an excellent approximation to the true Coulomb distribution. For small steps the Moliere tails must be taken into account. The Fermilab program does this in a way that crudely accounts for the nuclear form factor but includes the effects of large angle plural scattering. The Gaussian distribution and the Moliere tails are plotted in Figure II-3.

A second effect that can cause an otherwise "safe" muon trajectory to strike a detector is inelastic muon scattering in the material of the

dump. The Fermilab program determines the effect of inelastic muon scattering by producing a scatter at a random point along the trajectory and then following the deviated path. Scatters are generated uniformly in and within chosen limits. This is to ensure that all regions of the scattering distribution are sampled adequately. The scattering probability is converted to a weight and multiplies the production weight of the muon to give the final weight added to the total to give the number of hits on a detector.

In the MIT program, inelastic scattering is taken account of by an integration over q^2 and ν carried out at many points along the path of a muon. The range in ν is determined taking into account the stopping power of the portion of the dump remaining between the scattering point and the detector. The integral accumulates the scattering probability for that portion of the kinematic space that leads to a hit on the detector. Figure II-4 compares calculations of the three programs with data from the EMC on the scattering of 280 GeV/c muons from 2.3m of iron.

A third process that can contribute to the background is electromagnetic trident production. This effect is particularly dangerous since it can lead to an effective change of sign of the muon and thus to a cancellation of the magnetic deflection achieved before the interaction. The spectrum is relatively hard, dropping as 1/p, so it is difficult to defeat this process by range. All three programs calculate the effects of trident formation by treating it as a special kind of inelastic scattering, but allowing for the possible sign change.

The Columbia and MIT programs both treat energy loss of the muons as they travel through the dump as a continuous process. The Columbia program allows for the energy dependence of dE/dx in iron but treats loss in dirt as a constant. The MIT program uses an equation that fits the calculated loss rate in iron as a function of energy and scales that formula to give the correct minimum loss rate for dirt. In the Fermilab program a table is constructed that includes the exact restricted energy loss calculation for each relevant process: ionization, electron pair production and bremstrahlung. This table contains dE/dx for each material at intervals of 1 GeV/c momentum up to 1 TeV/c. Only losses due to collisions in which less than 10% of the energy is lost are included in this table. A separate calculation randomly generates an occasional large stochastic energy loss from the range 10% to 100% of the incident energy. The values of dE/dx for the three programs are compared in Figure II-5.

In the Columbia and MIT programs, the magnetic fields in active elements of the dump are always entered in the form of detailed field maps. These maps have been derived from various sources, sometimes by hand calculation and sometimes by detailed calculation with programs such as POISSON. The Fermilab Monte Carlo has the capability to accept detailed field maps, but has usually been applied in a mode in which it is given the field in a series of regions on the midplane of a magnet and then calculates the vertical and horizontal return fields by applying

flux conservation. This calculation gives the uniform field that would return the central flux. If the iron of the return yoke is saturated a uniform field is a good approximation. For unsaturated return yokes a linear variation is added to give agreement with detailed calculations.

The actual equations used to describe the above processes may be found in TM-1155, p. 14-20.

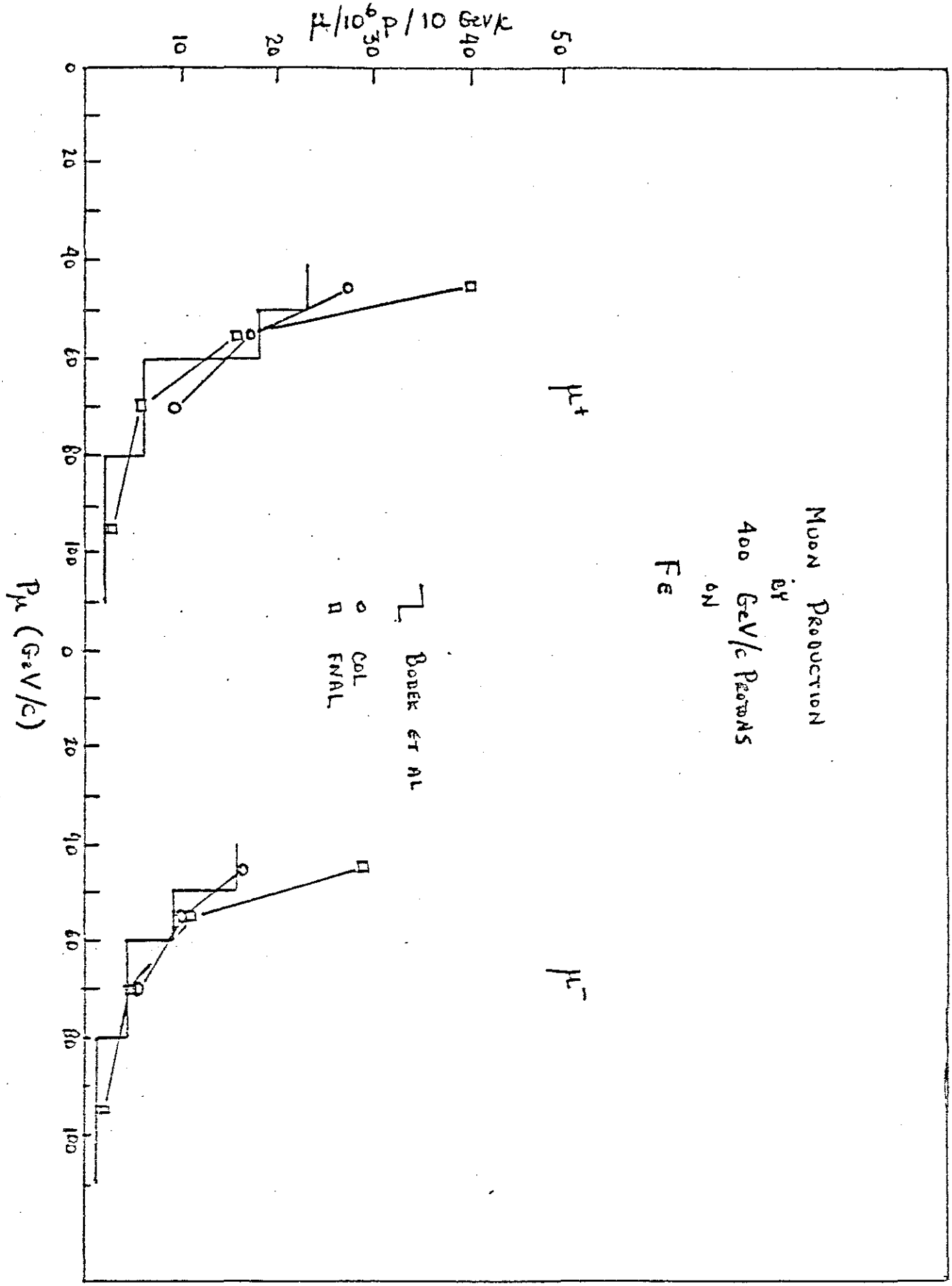
MUON PRODUCTION
BY
400 GeV/c PROTONS
ON
Fe
BODEK ET AL
COL
FNAL
μ+
μ-
μ/10^6 p / 10 GeV/c
P_μ (GeV/c)

Fig. II-1

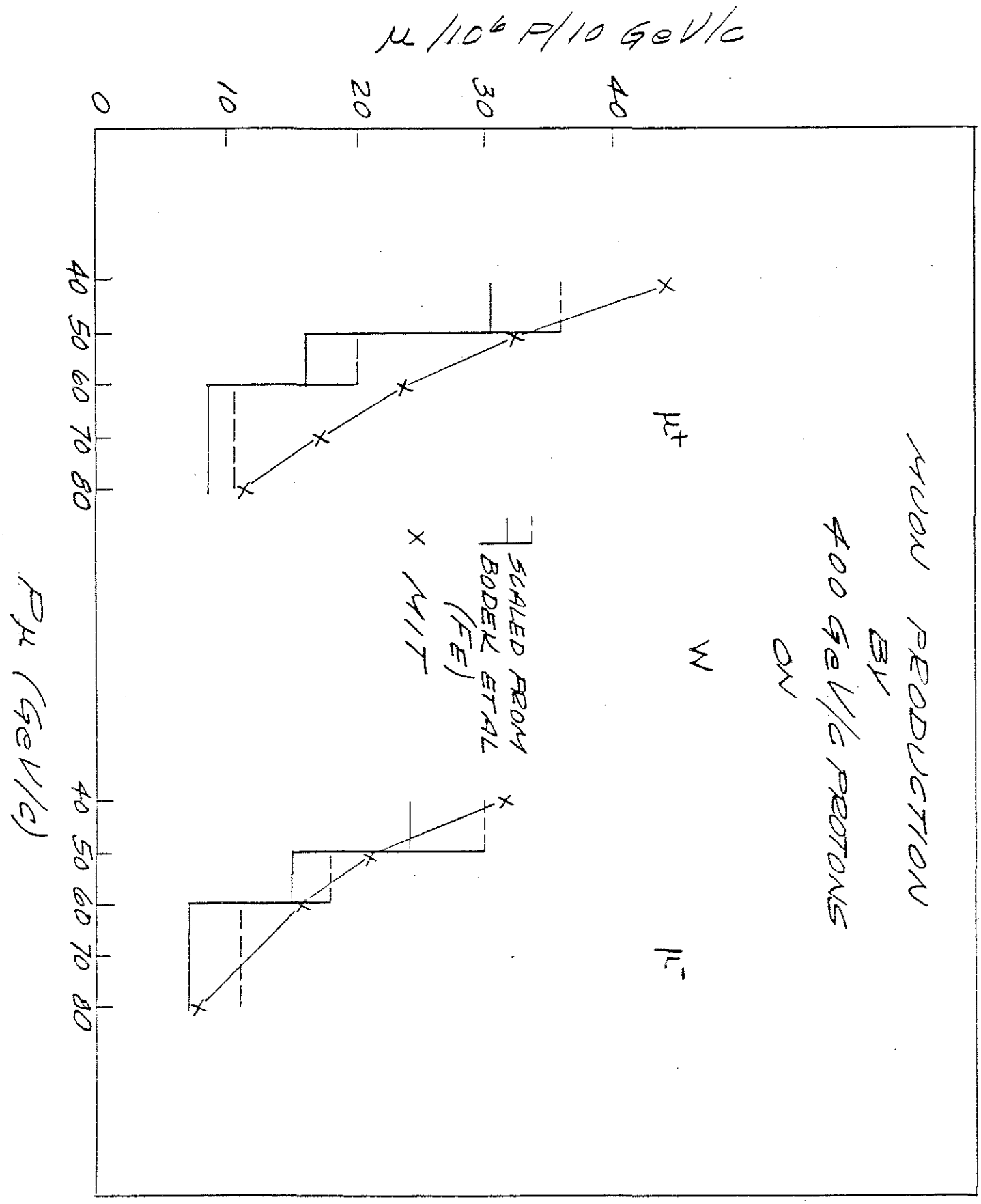
MUON PRODUCTION
BY
400 GeV/c PROTONS
ON
W
μ+
μ-
SCALED FROM
BODEK ET AL
(FE)
× MIT
μ/10⁶ P/10 GeV/c
0
10
20
30
40
40 50 60 70 80
40 50 60 70 80
Pμ (GeV/c)

Fig. II-2

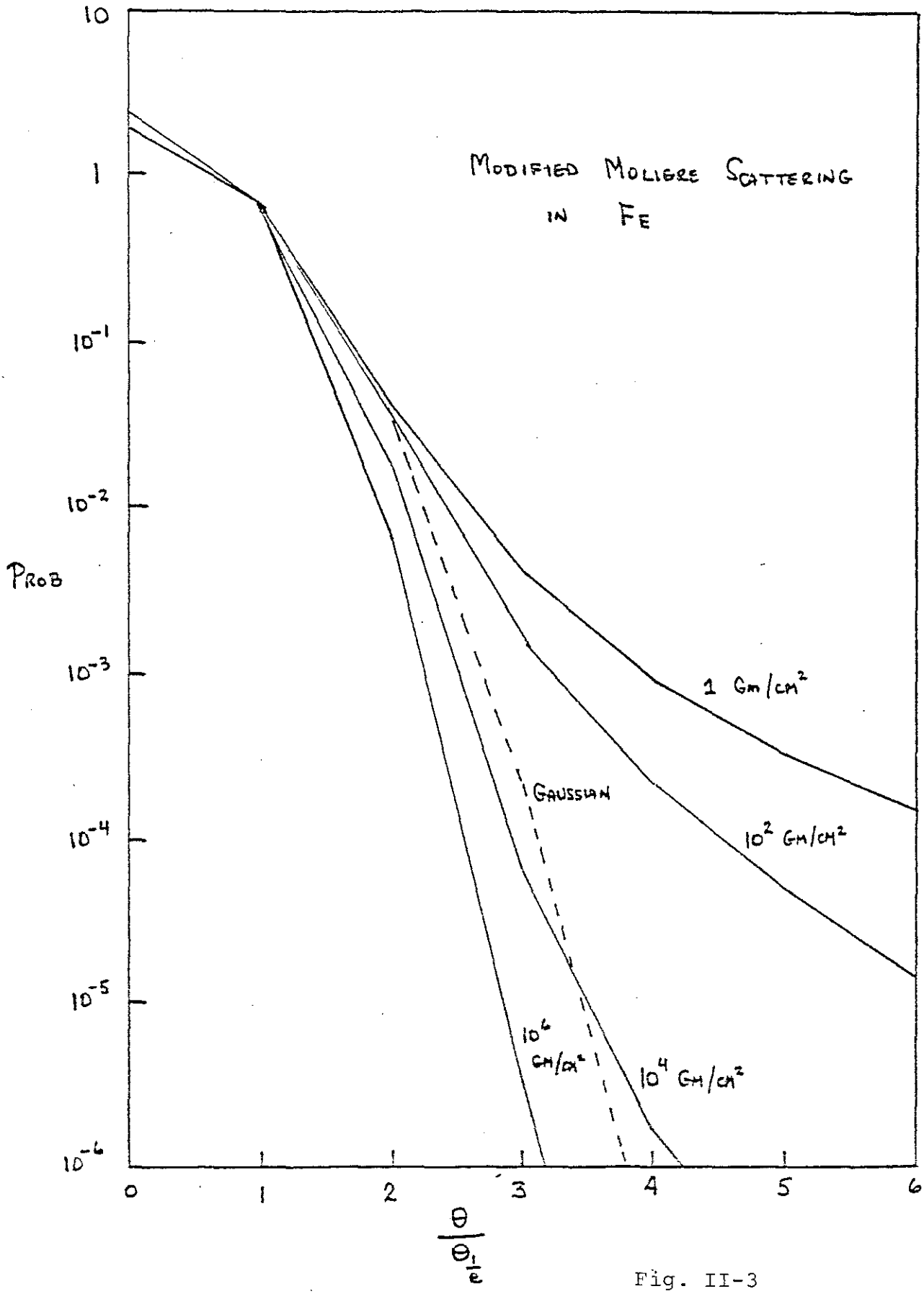
MODIFIED MOLIERE SCATTERING
IN FE
PROB
10
1
10^{-1}
10^{-2}
10^{-3}
10^{-4}
10^{-5}
10^{-6}
0
1
2
3
4
5
6
$\frac{\theta}{\theta_{\frac{1}{e}}}$
1 GM/CM²
10^2 GM/CM²
10^4 GM/CM²
10^6 GM/CM²
GAUSSIAN

Fig. II-3

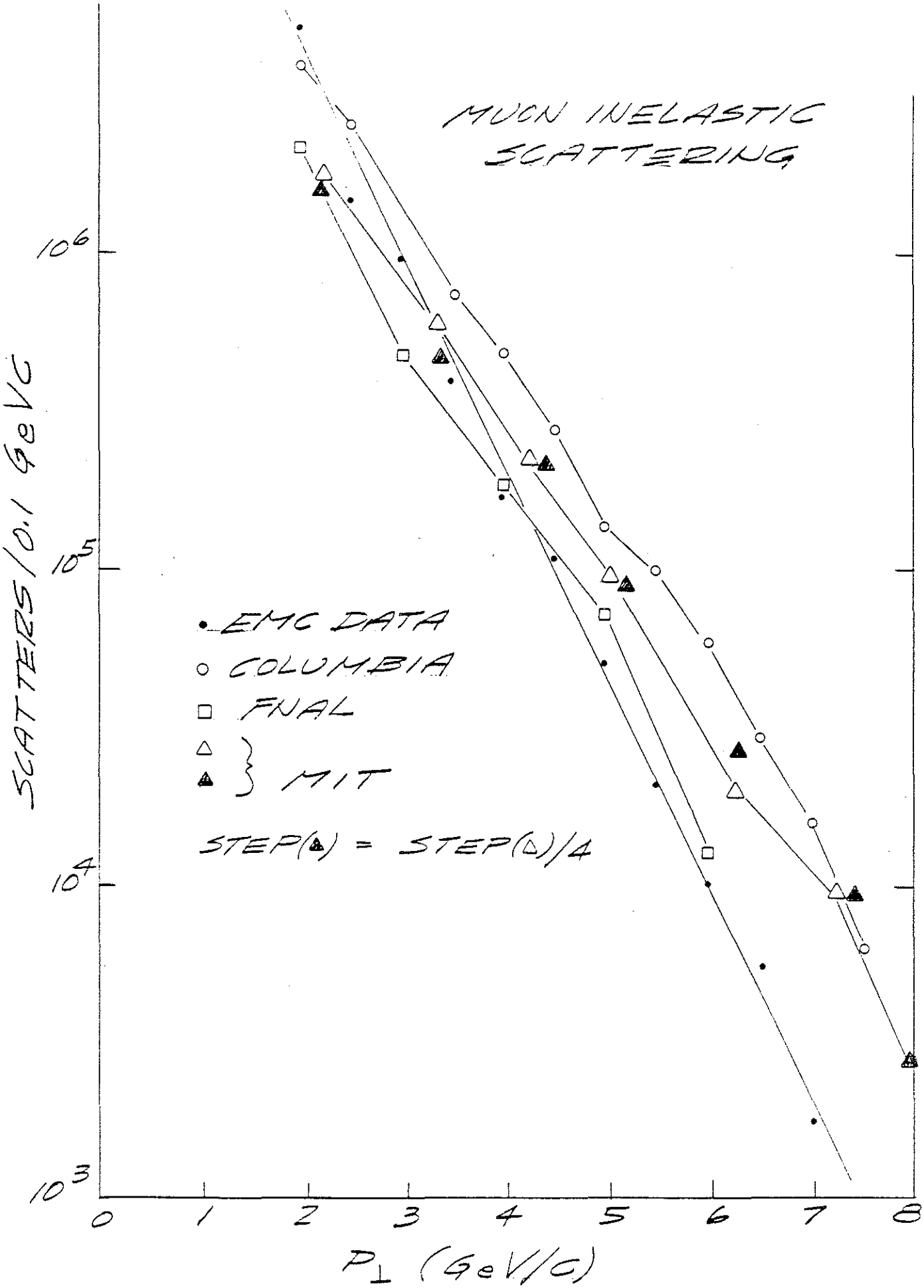
MUON INELASTIC SCATTERING
SCATTERS/0.1 GeV/C
10^6
10^5
10^4
10^3
• EMC DATA
○ COLUMBIA
□ FNAL
△ ▲ MIT
STEP(▲) = STEP(△)/4
0
1
2
3
4
5
6
7
8
$P_\perp$ (GeV/C)

Fig. II-4

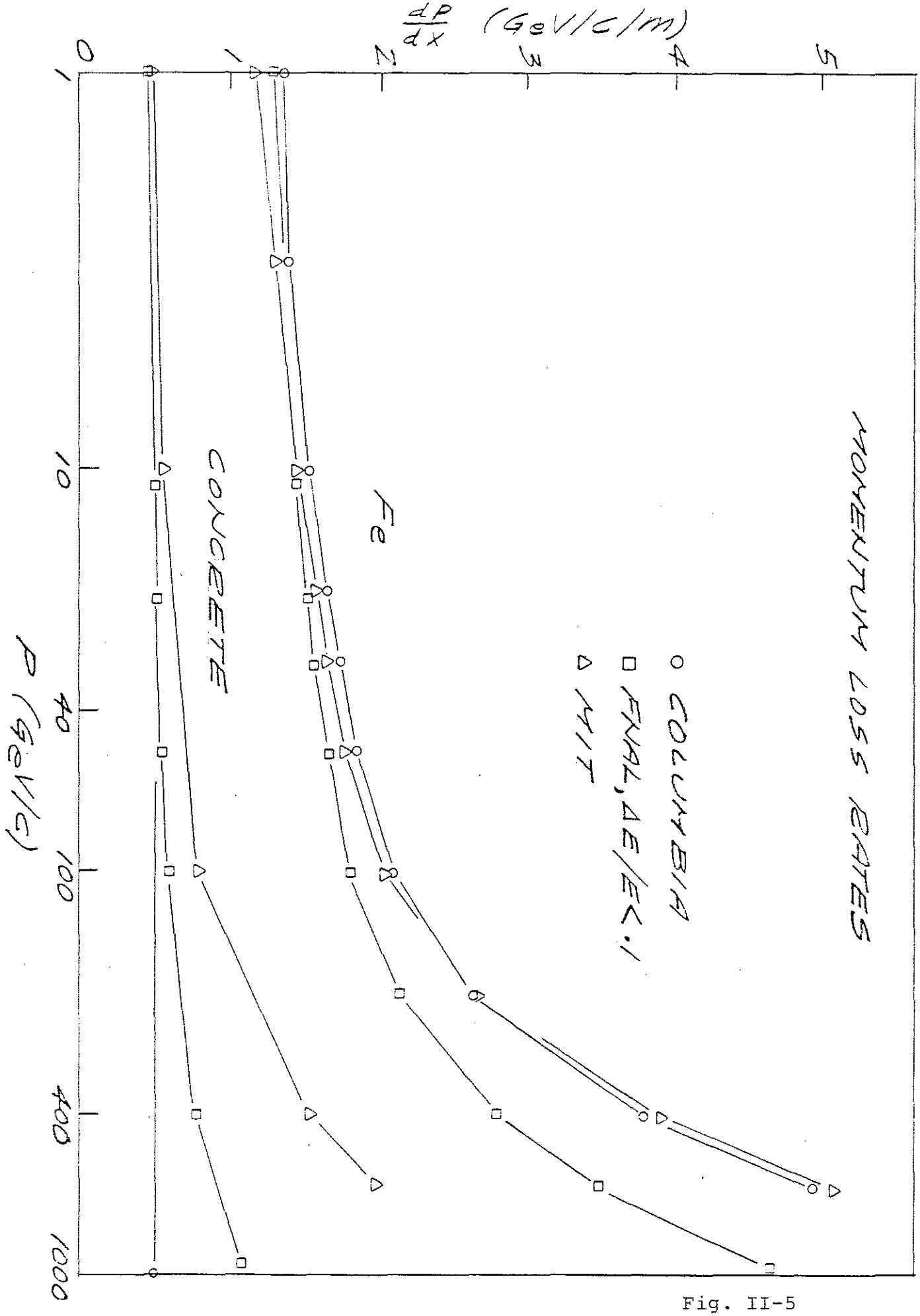
MOMENTUM LOSS RATES
○ COLUMBIA
□ FNAL, ΔE/E<.1
△ MIT
Fe
CONCRETE
dP/dx (GeV/c/m)
P (GeV/c)
0
1
2
3
4
5
1
10
40
100
400
1000

Fig. II-5

III. The E-613 Shield

The magnetized muon shield built for the beam dump experiment E-613 in the Meson Lab has some similarities to the shield we are designing for the Direct Neutral Lepton Facility in the neutrino area.

We felt that it would be a significant test of our programs to calculate the background muon fluxes in the E-613 shield and compare these to the actually measured muon fluxes. Such calculations have therefore been carried out using all three of the programs used in the neutrino area design for a variety of configurations of the E-613 shield. The agreement between the calculations and the measured fluxes is satisfactory for all three programs. In this section we describe these comparisons in some detail.

We have considered two different versions of this shield - the "Old Shield" used in the Spring 1981 run, and the "New Shield" used in the Spring 1982 run. In both versions the shield consisted of a magnetized iron front end followed by a passive iron shield. (See Figure III-1 for a sketch of these two versions). The magnetized part was the same for both versions and consisted of three magnets M1, M2, and the Hyperon magnet (10.4 meters total length) followed by two off-axis "spoiler" magnets. The passive part was approximately 13 meters long in the 1981 shield and about 18 meters long in the 1982 shield. Between the passive shield and the detector there was another 3 m long but narrower piece of passive iron (called the AVIS magnet) and 1.4 meters of concrete. Some parameters of these shields are summarized below:

	1981 Shield	1982 Shield
Length of magnetized iron[a]	10.4 m	10.4 m
Total B x L	223 Kgm	223 Kgm
ΔP_t	6.7 GeV/c	6.7 GeV/c
Total length of iron[b]	24 m	29 m
Minimum energy loss in shield	35 GeV	42 GeV
Multiple scatt. (ΔP_t)rms proj.	0.56 GeV/c	0.62 GeV/c

a) Excluding spoiler magnets. b) Excluding spoiler magnets and AVIS iron

The muon flux measurements carried out with this shield are given in the May 4, 1982, note by S. Childress and B. Roe and a December 8, 1981, note by G.K. Fanourakis. The available data fall into four categories:

1. The muon anticounters (MUANTI) at the front face of the detector. They cover a total of 5 feet x 5 feet, consisting of five horizontal strips labeled A, B, C, D, E (See Figure III-1) which are 5 feet wide by 1 foot high each. These give the total muon flux hitting the detector.

2. A probe counter (P counter) which is about 7" x 10" in size at the end of the passive iron shield (~31 meters from target in 1981, ~36 meters from target in 1982) counting in coincidence with the MUANTI counters (called P• MUANTI). The P counter was moved up and down at the end of the shield, but was always centered horizontally on the beam axis. The P• MUANTI coincidence gives the vertical distribution at the end of the passive iron for muons that hit the detector. (See Figures III-2 to 5)

3. The singles counting rate with the P counters both at the end of the passive iron and in the plane of the front face of the detectors. In regions of very high counting rate these counts are probably related to the total muon flux. However in regions of low muon flux they may have substantial backgrounds, or may even be dominated by, hadronic or electromagnetic junk (they are singles counts in a 7" x 10" counter).

4. Muons seen in the E-613 detector in the time gate of a neutrino event trigger (called "stale muons"). These muons must have at least 1.1 GeV to be detected, and about 5 GeV to traverse the whole detector. Thus the muon flux between 1.1 and 5 GeV and the flux above 5 GeV in the detector are available.

Due to an error in stacking at the time when the 1981 shield was modified to the new 1982 configuration, too much iron (by six blocks) was placed on top of the passive iron shield. In this position the extra six blocks intercepted the very high flux of deflected muons, multiple scattered some of them into the detector, and thus increased the flux of muons in the detector. These blocks were then removed when the error was discovered, and the muon flux decreased by the expected factor of five or so. The fluxes were measured with all six blocks on, four of these blocks off, and finally with all six blocks off. In addition, the muon fluxes were measured by the E-613 group with the incident proton beam pitched upward by 4 milliradians ("PITCH ON" data), which was their usual running condition, and also with the incident protons at 0 milliradian (i.e. "PITCH OFF" data). Thus there exists a large amount of measured muon flux data under a large variety of conditions, i.e. the original 1981 configuration, the final 1982 configuration (with all six blocks off), and the two intermediate configurations (with all six blocks on, and with four blocks off, two on), each of these with the proton beam at 0 mrad and 4 mrad. We have calculated the expected muon fluxes for each of these configurations with each of the three programs (i.e. Columbia, Fermilab, and MIT) independently. The large variety of different conditions provided a fairly thorough check of the calculations.

The results of the calculations for the total muon fluxes (sum of μ^+ and μ^-) are compared with the E-613 measurements in Table III-1. The first column of the Table gives the measured fluxes, and columns 2, 3, and 4 give the fluxes calculated by the three programs. We see that the calculations are within a factor of two of each other and the measurements for all of the various conditions for which measurements are available. We consider this very satisfactory agreement.

The calculations of the vertical distribution of the muon flux at the end of the passive iron (for muons that also hit the detector) are compared with the P. MUANTI coincidence counts in Figures III-2 to III-5. Finally, the calculations for the vertical and horizontal distribution flux in the plane of the front face of the detector are compared with the corresponding P singles measurements in Fig. III-6 and III-7. The agreement between the calculations and the measurements is within a factor of three or so even in these detailed distributions, which we consider quite satisfactory.

However, a few comments about the precision of the agreement that can be expected might be useful.

a) The precision of the measured fluxes can be estimated by looking at the internal consistency of the measurements.

For example, consider the "PITCH OFF" data with the incident protons at 0 mrad to the horizontal. Since the 613 detector is vertically centered 30 cm above the horizontal axis, with the incident protons at 0 mrad the high energy end of the muons (300 to 400 GeV) clip the upper edge of the detectors. From the simple geometry of the situation we see that these muons pass the end plane of the passive iron shield (at 36 meters from the target) in a narrow region around 6 feet above the floor (see Fig. III-8). Such a peak is indeed observed and can be seen in Figures III-3,4,5. However both the magnitude and the position of this peak at 6 feet should be independent of the number of steel blocks above 9 feet on top of the shield. But the measured peak in Figures III-3 to 5 (Figures 9, 10, and 11 of May 4, 1982, note by Childress and Roe) vary by a factor of two in magnitude and 6" in position. We thus conclude that the precision (normalization, position, etc.) of the P· MUANTI measurements are no better than a factor of two in magnitude and 6" in position.

Another example worth looking at is the horizontal distribution of the muons above the detector (Fig. III-7, or Fig. 13 of the May 4, 1982 report by Childress and Roe) which shows a sharp peak about 20" off center. However, all of the relevant components of the beam and shield are claimed to be centered horizontally, so therefore our programs calculate a peak of magnitude comparable to the observed peak but centered horizontally. This indicates that either the placement of some of the shield or beam components or the position accuracy of the E-613 flux measurement are off by as much as 20".

b) In a detailed comparison of the inner workings of the three muon flux programs, we tried to separate the effects of the initial muon production rates in the dump from the calculation of the transmission of the shield. We define the transmission ratio at a particular set of initial values of the total momentum P and the transverse momentum P_t as the fraction of muons (produced in the dump at that P and P_t) that end up in the detector. This ratio is clearly independent of the number of muons produced at that P and P_t. Figs. III -9 and III-10 show the comparisons of the three programs at a few values of P and P_t. The agreement is well within a factor of two.

The three programs use different parameterizations of the pion production rates and of the μ/π ratios in the dump, as discussed in Section II of this appendix. The agreement between these parameterizations is not better than a factor of two. We therefore believe that the differences between the fluxes calculated by the three programs are mainly due to the muon production formulas and not because of differences in calculating what muons do in the shield. A detailed comparison of the predictions of the three programs and measured muon rates from 300 and 400 GeV proton-nucleon interactions can be found in TM-1155, p. 45-60. We reproduce here the most relevant part of that discussion.

a. The most relevant data for the total muon production is the data of Bodek, Ritchie et al. In this experiment, the total $\mu^{\pm}$ production rate was measured with 350 GeV protons in an iron beam dump. Jack Ritchie was very kind to supply us with this data before corrections were subtracted for π,K decays, etc. These numbers then can be directly compared to the total muon rates from our formulae, which is the quantity that is relevant to us. His numbers were for 6.038×10^8 protons interacting in the dump. He thought that the data were reliable for the region $P_\mu \geq 50$ GeV and $P_t \geq 0.6$ GeV/c. The comparison for the x dependence is shown in Figures III-11 and 12 and the P_t dependence in Figures III-13 and 14. We see that the agreement is good, with the Columbia formulae overestimating by a factor of typically 1.5, and the MIT formula by ~2. But, note the data is for iron and the MIT prediction is for tungsten. Since the formulae predict more than the data, our calculations using these formulae will be conservative since we will calculate more background than we should actually have.

b. The comparison with the Bodek, Ritchie et al. data is very reassuring. It covers a fairly large range in x, out to x = 0.63. However, it is limited to $P_t \leq 2.2$ GeV/c. To check the high P_t fluxes, we compared with the CERN ISR data on π^0 production in the CCOR experiment out to P_t ~14 GeV/c. The comparison of these data with the Taylor-Walker formula for π production used in the Columbia and the Fermilab program is shown in Figures III-15 and 16. The agreement is quite good at low P_t (as it should be) but at P_t ~10 GeV/c, which is the highest P_t that may be relevant in the muon shield calculations, the formula overestimates the measured

cross sections by a factor of five or so (at $\sqrt{s} = 53$, which is similar to the Tevatron). Again, the calculations using this formula are then conservative since they overestimate the background. The formula used in the Fermilab program agree well with the data.

c. The highest P_t muon production data that we could find was that of Cronin et al. This was for inclusive μ^+ production by 300 GeV protons. The data available is for the prompt μ^+ production in a thin nuclear target, corrected for μ's from π and K decay. The comparison with the prompt μ cross section from the formula used in the Columbia program is shown in Figure III-17. The agreement is good at low P_t but the formula overestimates the measured cross section by almost an order of magnitude at P_t ~6 GeV/c. The MIT formula for the total μ^+ cross section is also shown (the prompt and the decay contributions cannot be separated in this formula) and is larger than the measured data. Thus the calculations based on these formulae can be expected to be conservative at high P_t. The formula used in the Fermilab program agrees very well in shape but the normalization is slightly low (but within a factor of two or so of the data).

In view of the above comments about the precision of the muon flux measurements, the positioning of the elements of the shield, and the uncertainties of the muon production formulas, we believe that the agreement between our calculations and the actually observed muon fluxes are quite satisfactory, both in the total fluxes and the detailed flux distributions.

Another point worth noting is that the factor of five decrease in the muon background flux in the E-613 detector due to the additional 5 meters of passive iron (the main change from the 1981 shield to the final 1982 shield configuration) was predicted by one of our programs before the shield was restacked and the reduced flux was measured. It gives us more confidence in our programs that they are not only able to explain fluxes after the observed rates are known but they can predict what will happen in some new configuration before the flux measurements are made. In addition, the set of muon measurements with full density tungsten target and the final shielding configuration was made after our muon flux predictions were made available for that configuration. The agreement is again satisfactory.

Table III-1

E-613 Shield Muon Flux Comparisons

	Observed Flux	Columbia Program	Fermilab Program	MIT Program
1. Old Shield (1981)				
Total MUANTI	47,500	56,000	40,000	58,500
$P\mu \geq 1.1$ GeV/c	25,000	34,000		
Counter A	15,053	19,500	10,300	18,000
B	11,048	1,200	5,200	12,500
C	9,171	10,600	6,500	9,500
D	7,035	11,500	10,300	9,000
E	7,336	13,800	7,700	9,500
2. New Shield (1982)				
6 Blocks ON	58,000		48,000	53,000
4 Blocks OFF, 2 ON	29,000			20,000
Final (All 6 Blocks OFF)	10,400	6,200	5,400	8,000

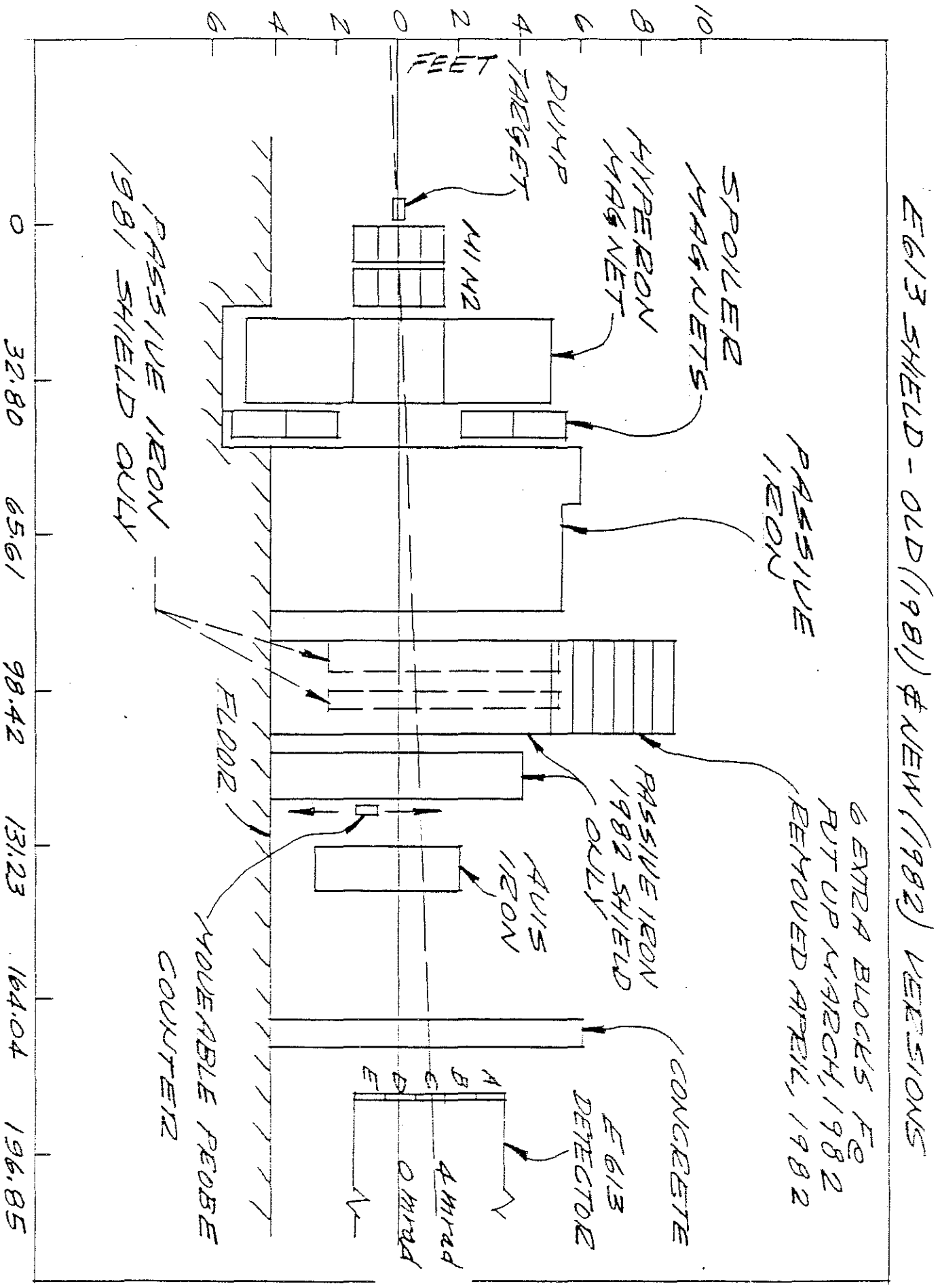
E613 SHIELD - OLD (1981) & NEW (1982) VERSIONS
6 EXTRA BLOCKS FOR PUT UP MARCH, 1982 REMOVED APRIL, 1982
CONCRETE
E613 DETECTOR
A
B
C
D
E
4 MRAD
0 MRAD
AVIS IRON
PASSIVE IRON 1982 SHIELD ONLY
PASSIVE IRON
SPOILER MAGNETS
FIREBRON MAGNET
QUAD
TARGET
FEET
10
8
6
4
2
0
2
4
6
MOVEABLE PROBE COUNTER
FLOOR
PASSIVE IRON 1981 SHIELD ONLY
0
32.80
65.61
98.42
131.23
164.04
196.85
FEET

Fig. III-1

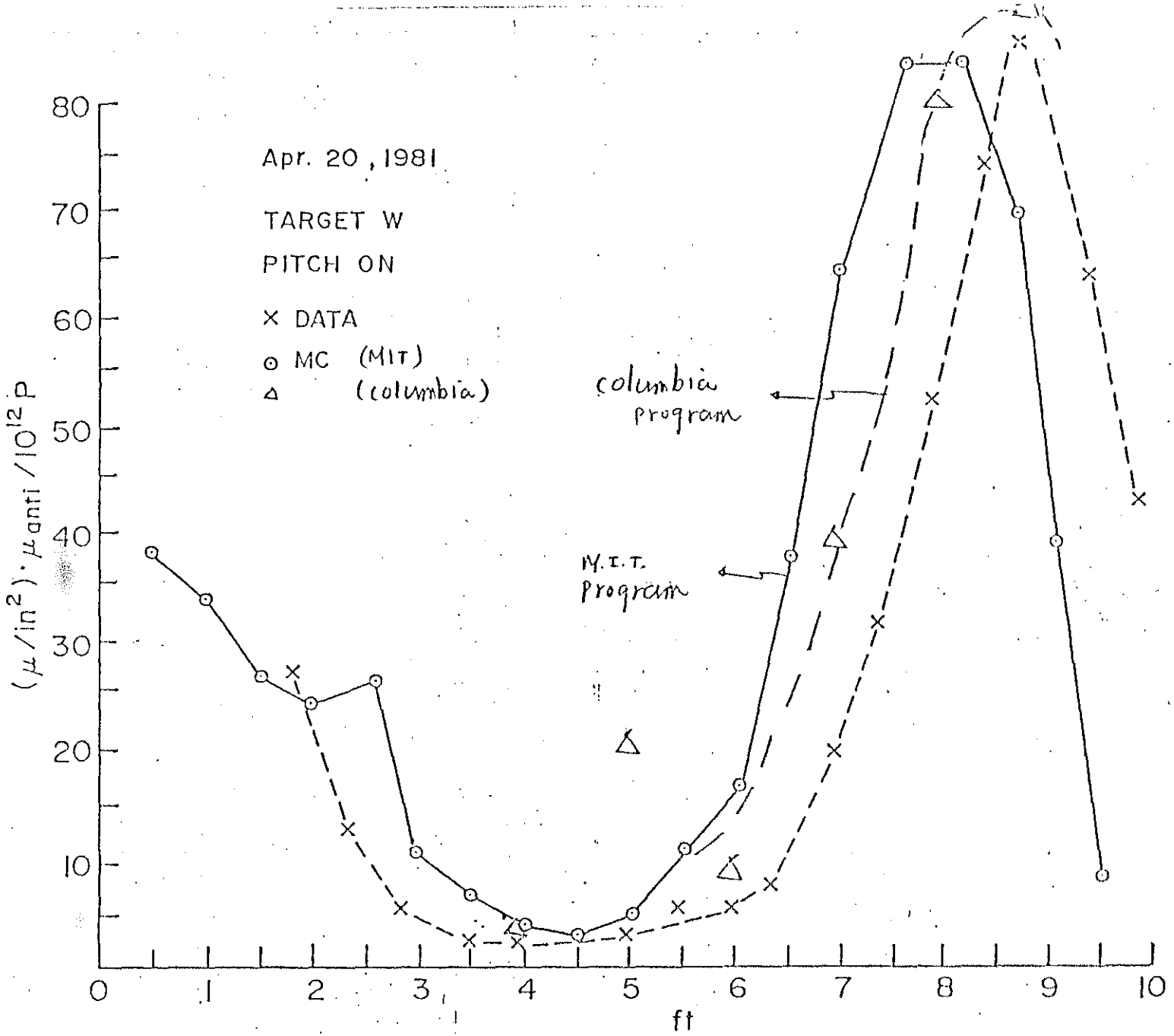
Apr. 20, 1981
TARGET W
PITCH ON
× DATA
⊙ MC (MIT)
△ (columbia)
columbia program
M.I.T. Program
$(\mu/in^2)\cdot\mu_{anti}/10^{12}p$
ft
0
1
2
3
4
5
6
7
8
9
10
10
20
30
40
50
60
70
80

Fig. III-2

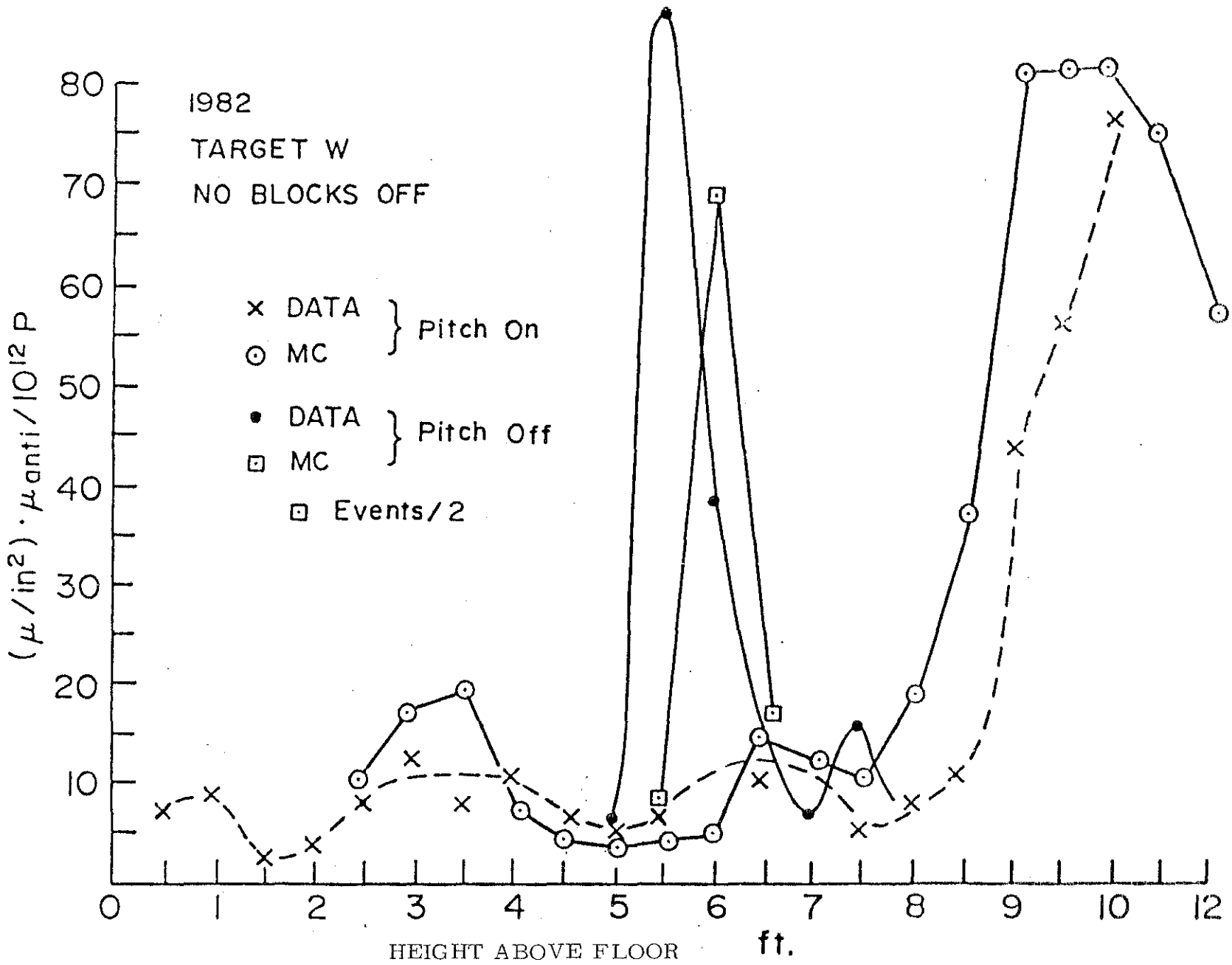
1982
TARGET W
NO BLOCKS OFF
× DATA
⊙ MC
Pitch On
• DATA
⊡ MC
Pitch Off
⊡ Events/2
(μ/in²) · μanti/10¹² P
80
70
60
50
40
30
20
10
0
1
2
3
4
5
6
7
8
9
10
12
HEIGHT ABOVE FLOOR
ft.

Fig. III-3

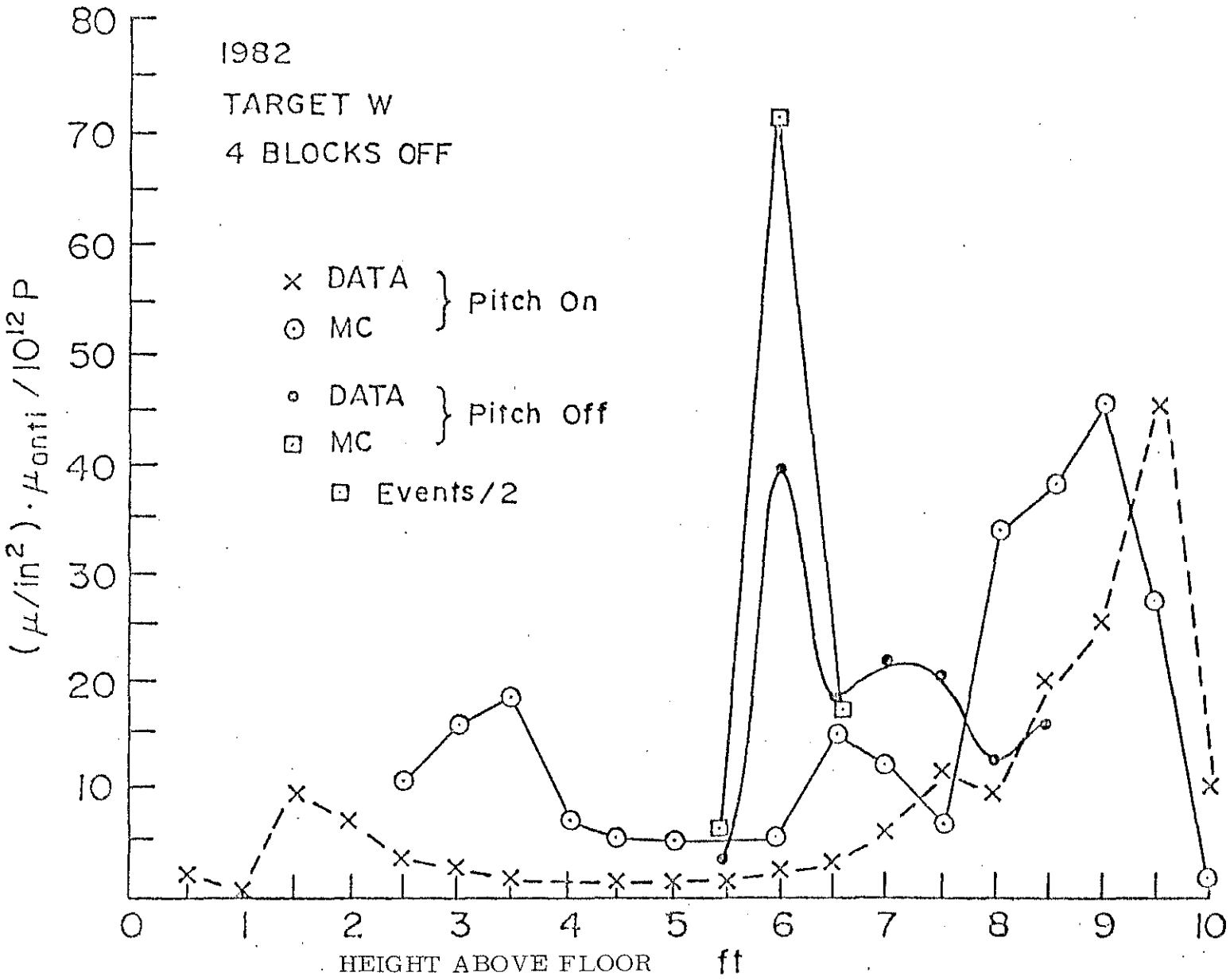
1982
TARGET W
4 BLOCKS OFF
× DATA
⊙ MC
Pitch On
∘ DATA
⊡ MC
Pitch Off
⊡ Events/2
$(\mu/in^2)\cdot\mu_{anti}/10^{12}$ P
80
70
60
50
40
30
20
10
0
1
2
3
4
5
6
7
8
9
10
HEIGHT ABOVE FLOOR ft

Fig. III-4

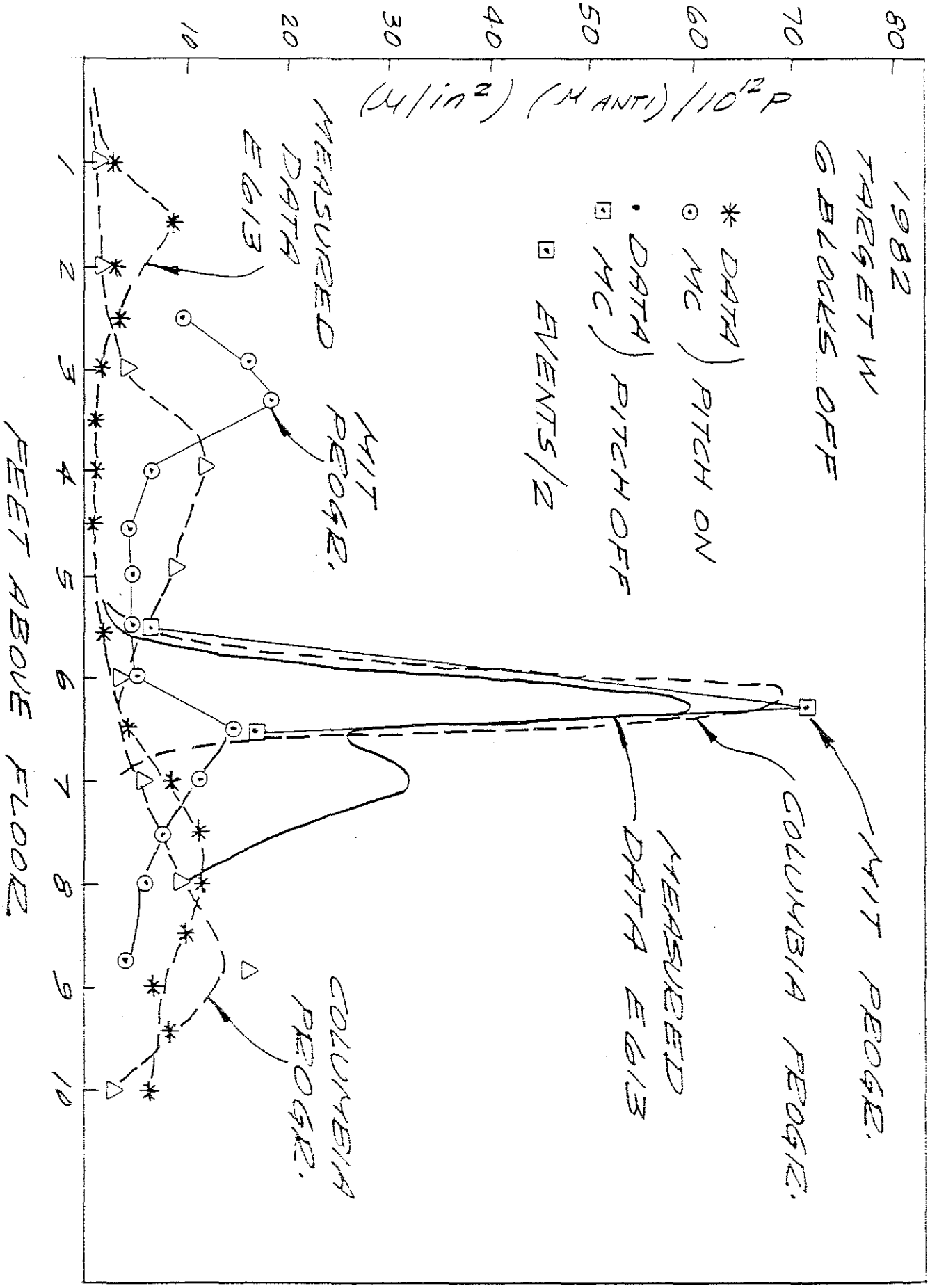
1982
TARGET W
6 BLOCKS OFF
DATA (PITCH ON)
MC
DATA (PITCH OFF)
MC
EVENTS/2
MEASURED DATA EGIS
MIT PEOGR.
COLUMBIA PEOGR.
MIT PEOGR.
COLUMBIA PEOGR.
MEASURED DATA EGIS
FEET ABOVE FLOOR
1
2
3
4
5
6
7
8
9
10
10
20
30
40
50
60
70
80
P/10^12 (M ANTI)/(M/in^2)

Fig. III-5

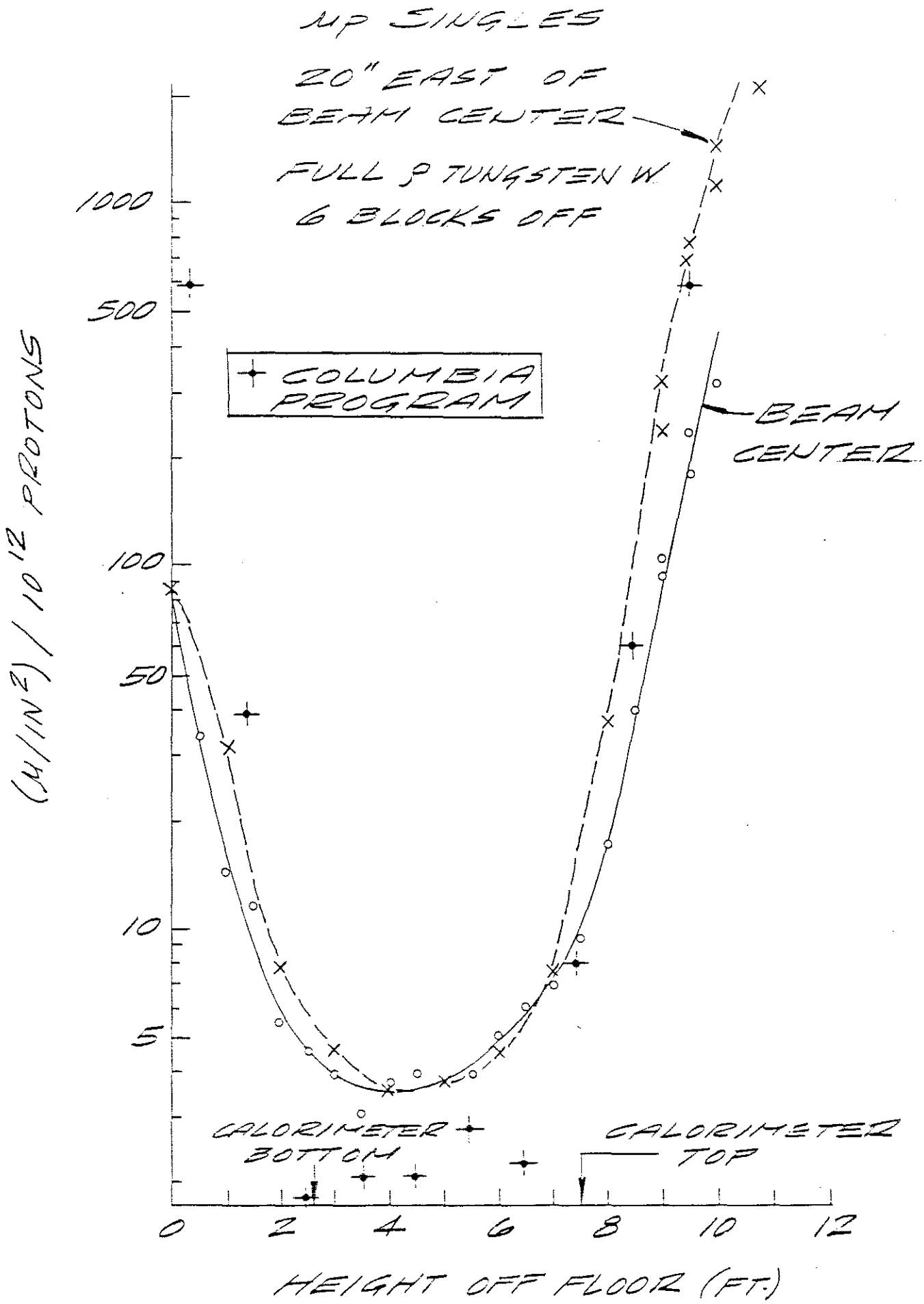
μp SINGLES
20" EAST OF
BEAM CENTER
FULL ρ TUNGSTEN W
6 BLOCKS OFF
COLUMBIA
PROGRAM
BEAM
CENTER
CALORIMETER
BOTTOM
CALORIMETER
TOP
1000
500
100
50
10
5
0
2
4
6
8
10
12
(μ/IN²) / 10¹² PROTONS
HEIGHT OFF FLOOR (FT.)

Fig. III-6

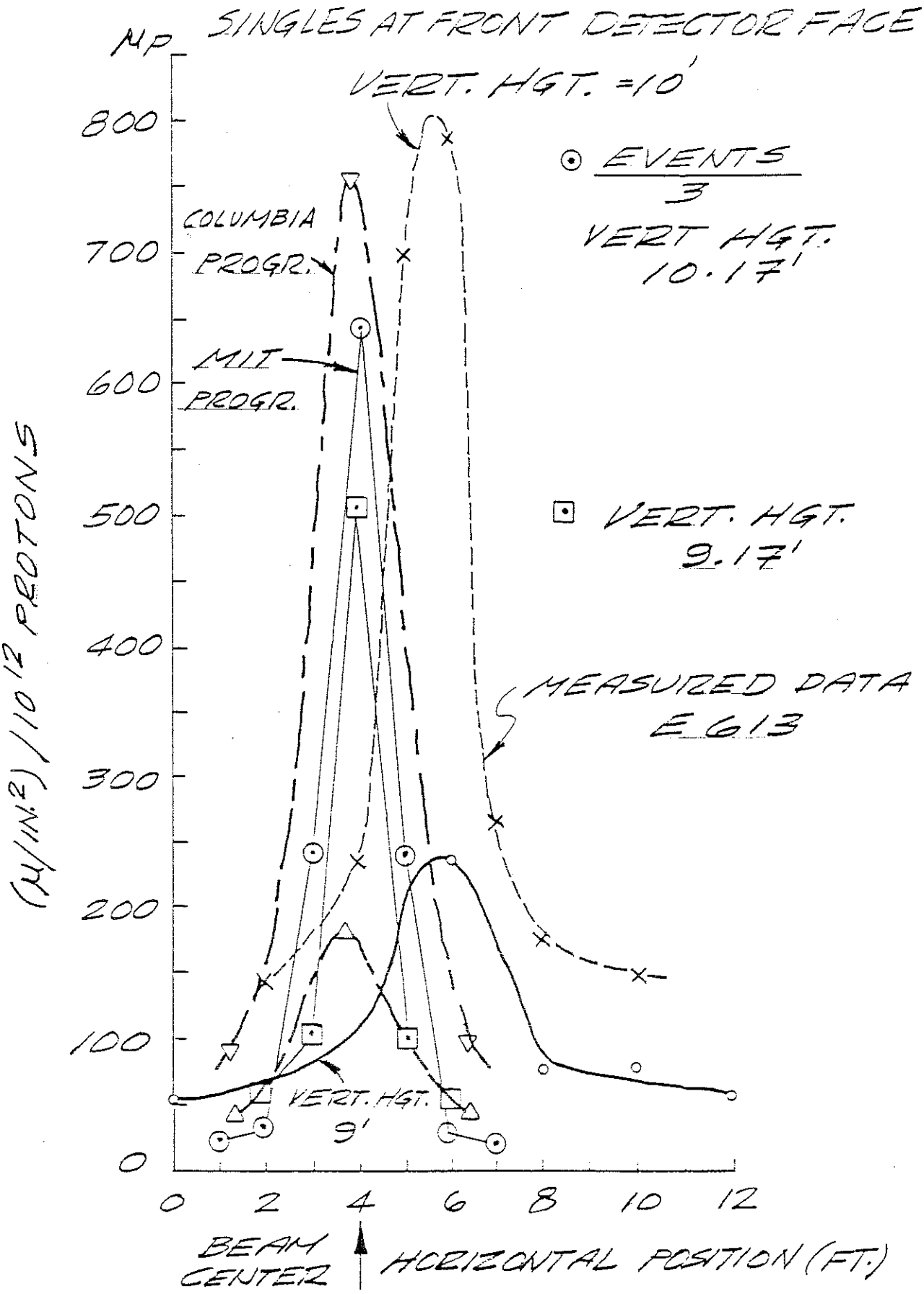
SINGLES AT FRONT DETECTOR FACE
VERT. HGT. =10'
Np
800
700
600
500
400
300
200
100
0
COLUMBIA PROGR.
MIT PROGR.
EVENTS / 3
VERT HGT. 10.17'
VERT. HGT. 9.17'
MEASURED DATA E 613
VERT. HGT. 9'
(μ/IN.²)/10¹² PROTONS
0
2
4
6
8
10
12
BEAM CENTER
HORIZONTAL POSITION (FT.)

Fig. III-7

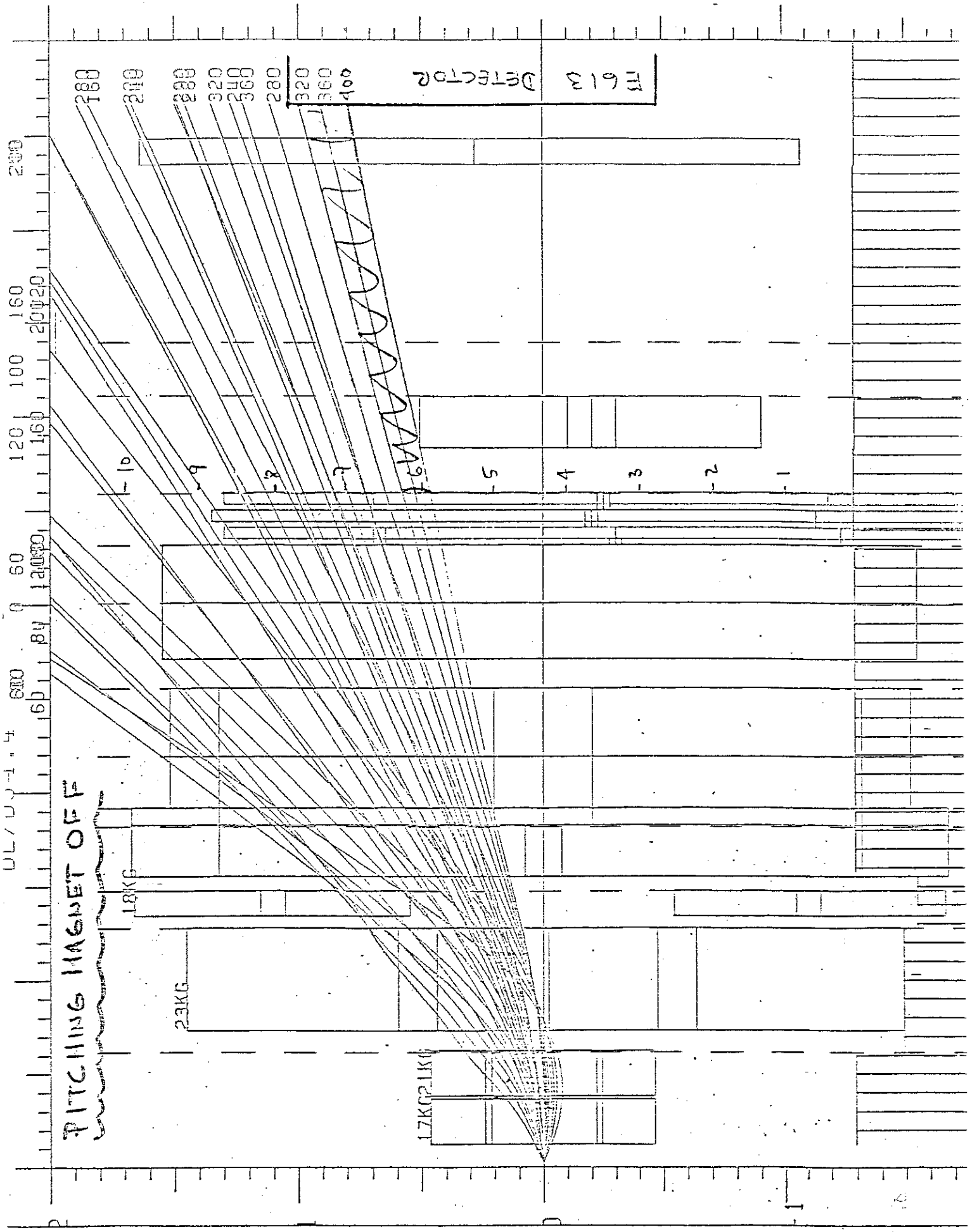
E613 Detector
PITCHING MAGNET OFF
18KG
23KG
17KG
21KG
280
320
360
400
1
2
3
4
5
6
7
8
9
10

Fig. III-8

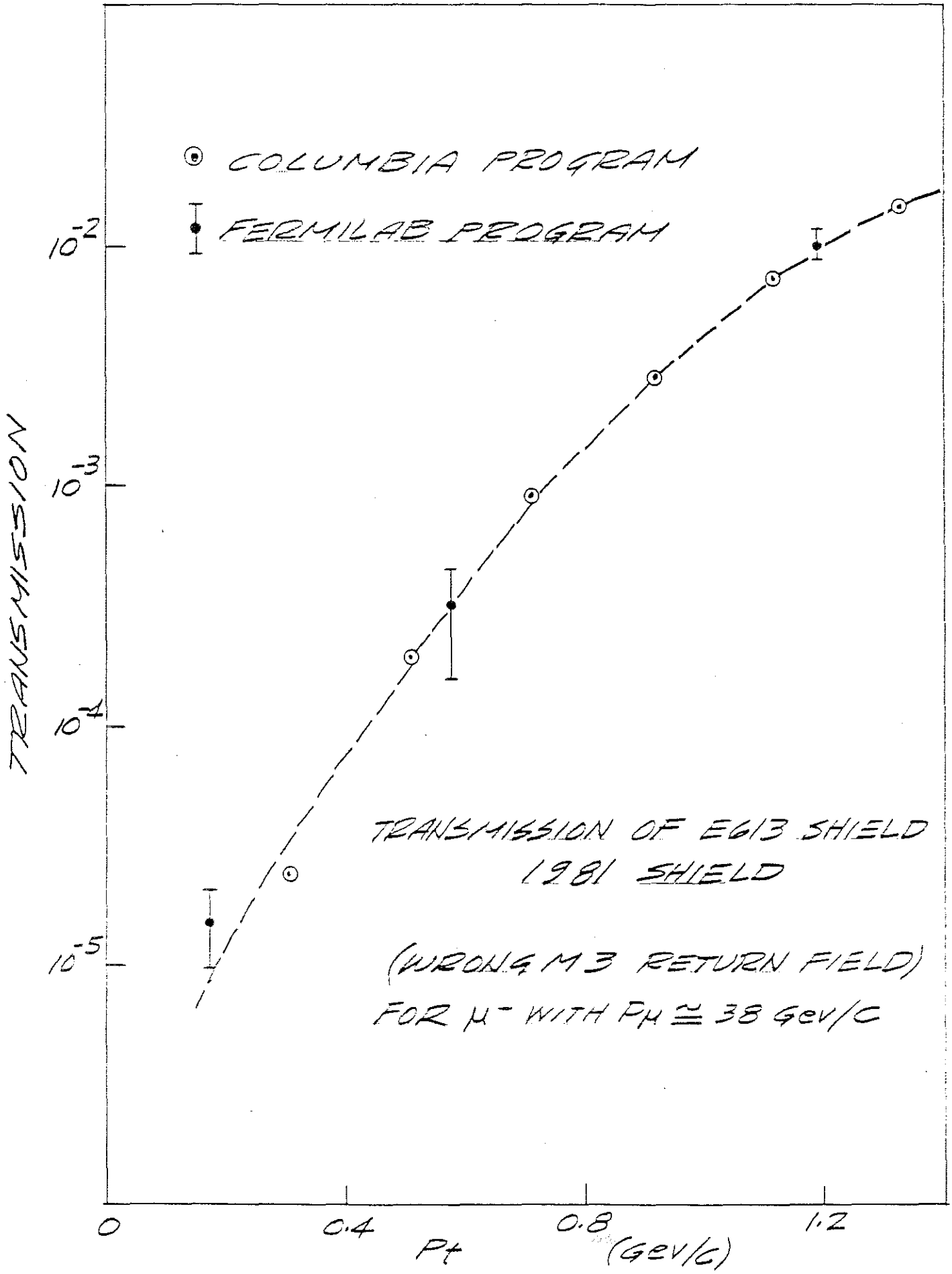
COLUMBIA PROGRAM
FERMILAB PROGRAM
TRANSMISSION
10^{-2}
10^{-3}
10^{-4}
10^{-5}
TRANSMISSION OF E613 SHIELD
1981 SHIELD
(WRONG M3 RETURN FIELD)
FOR μ^- WITH $P_\mu \cong 38$ GeV/C
0
0.4
0.8
1.2
P_t (GeV/c)

Fig. III-9

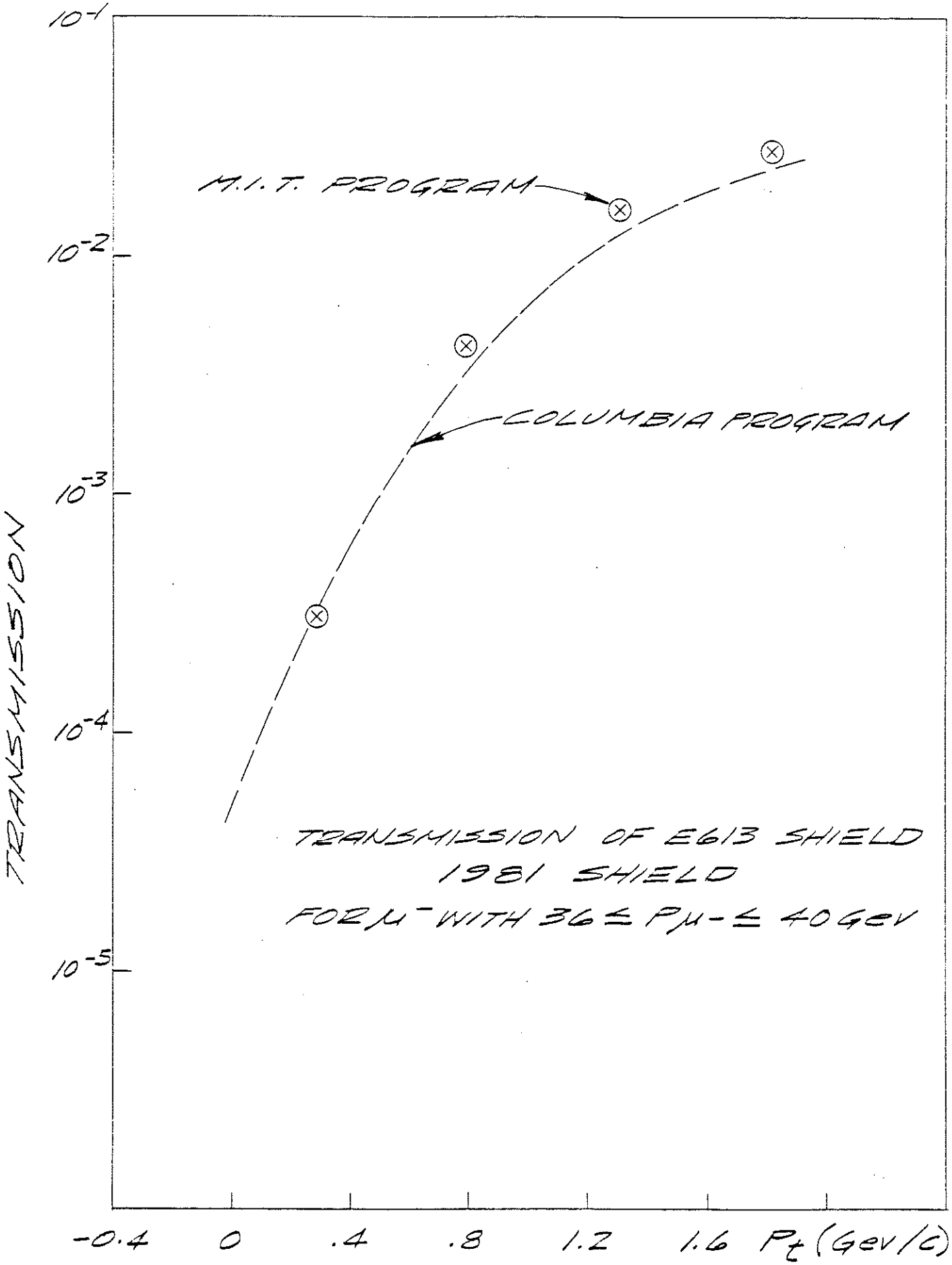
M.I.T. PROGRAM
COLUMBIA PROGRAM
TRANSMISSION OF E613 SHIELD
1981 SHIELD
FOR μ⁻ WITH 36 ≤ Pμ- ≤ 40 GeV
TRANSMISSION
10⁻¹
10⁻²
10⁻³
10⁻⁴
10⁻⁵
-0.4
0
.4
.8
1.2
1.6
Pt (GeV/c)

Fig. III-10

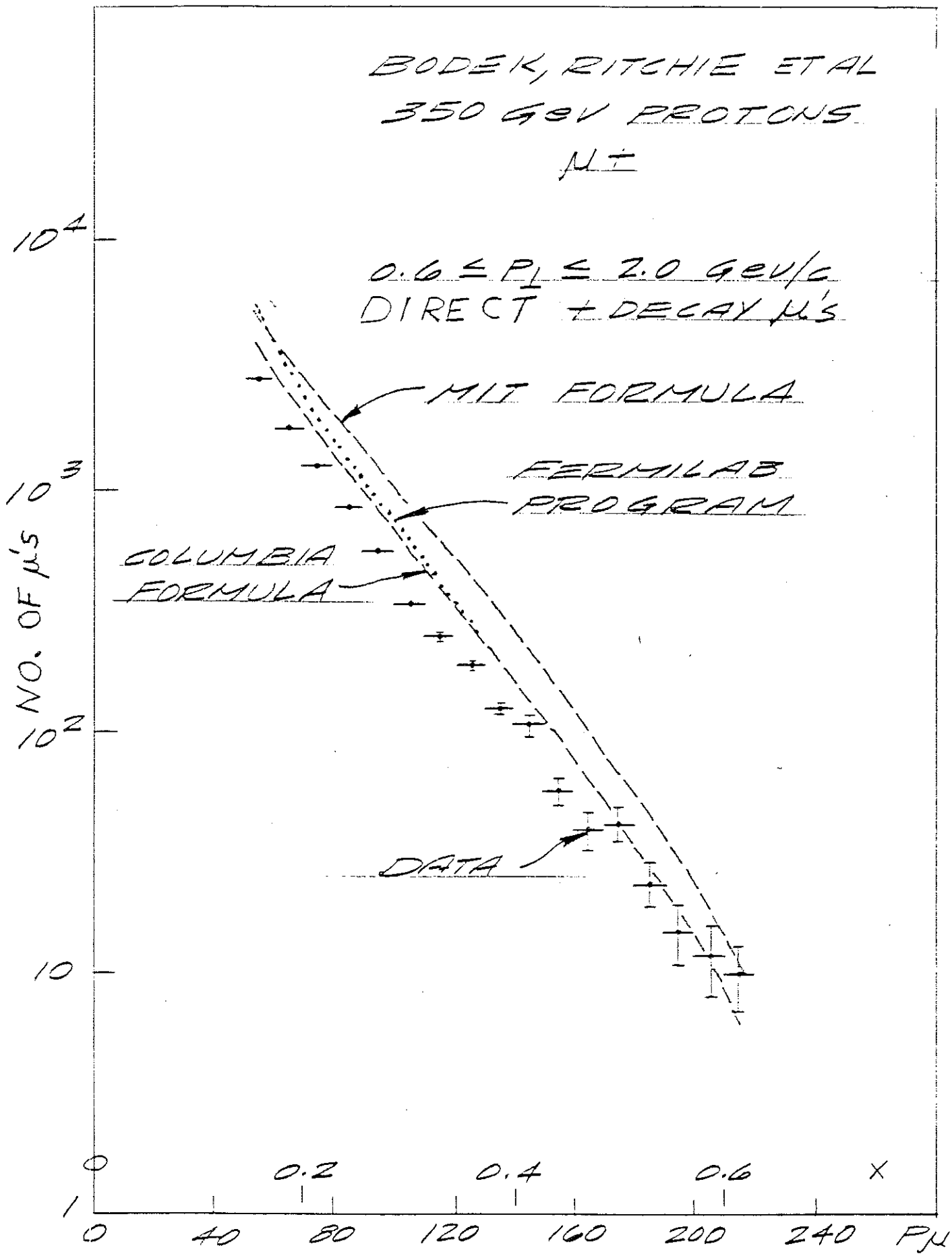
BODEK, RITCHIE ET AL
350 GeV PROTONS
μ±
0.6 ≤ P⊥ ≤ 2.0 GeV/c
DIRECT + DECAY μ's
MIT FORMULA
FERMILAB PROGRAM
COLUMBIA FORMULA
DATA
NO. OF μ's
10^4
10^3
10^2
10
1
0
0.2
0.4
0.6
X
0
40
80
120
160
200
240
Pμ

Fig. III-11

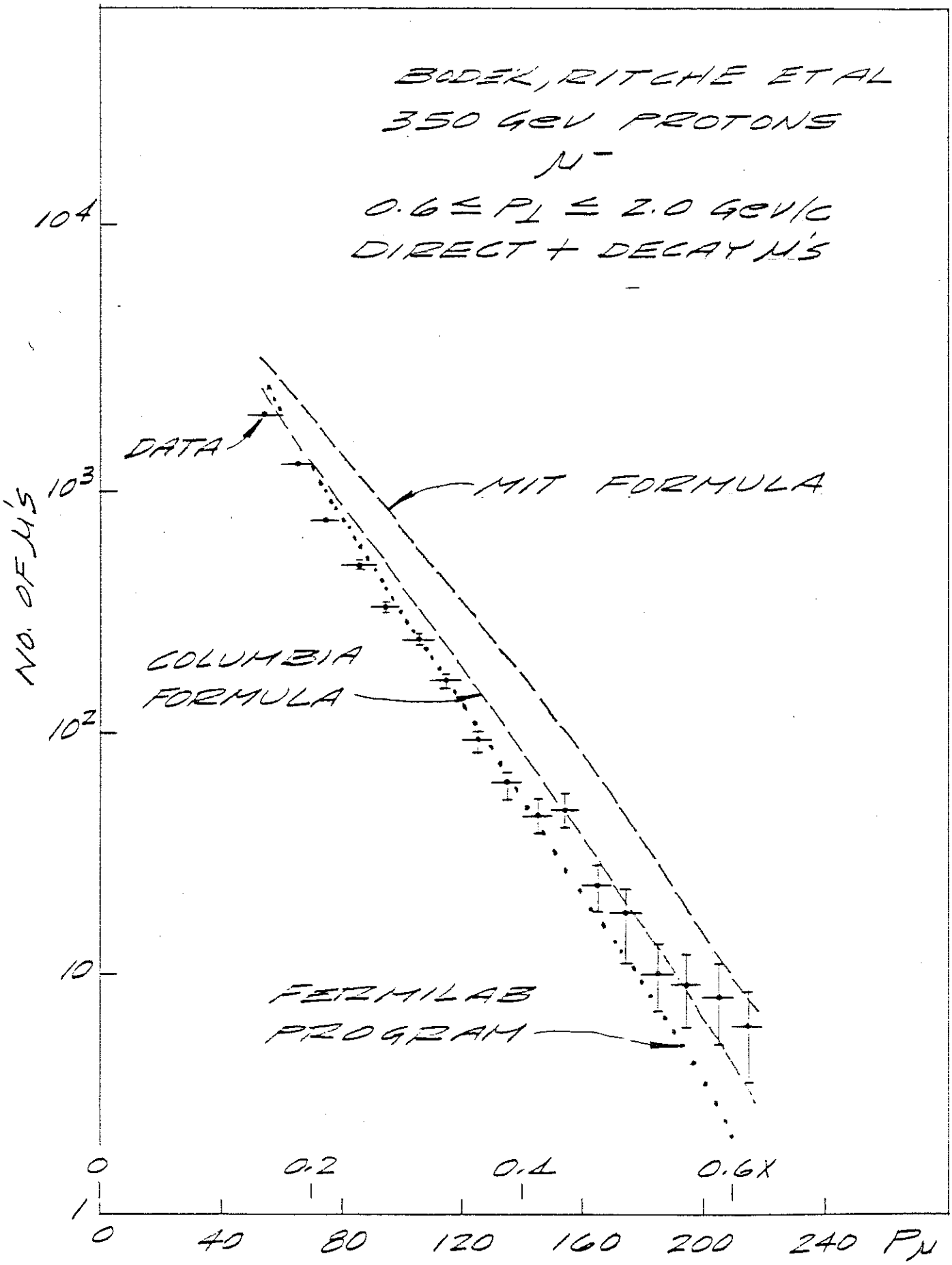
BODEK, RITCHE ET AL
350 GeV PROTONS
μ⁻
0.6 ≤ P⊥ ≤ 2.0 GeV/c
DIRECT + DECAY μ'S
DATA
MIT FORMULA
COLUMBIA FORMULA
FERMILAB PROGRAM
NO. OF μ'S
10⁴
10³
10²
10
1
0
0.2
0.4
0.6X
0
40
80
120
160
200
240
Pμ

Fig. III-12

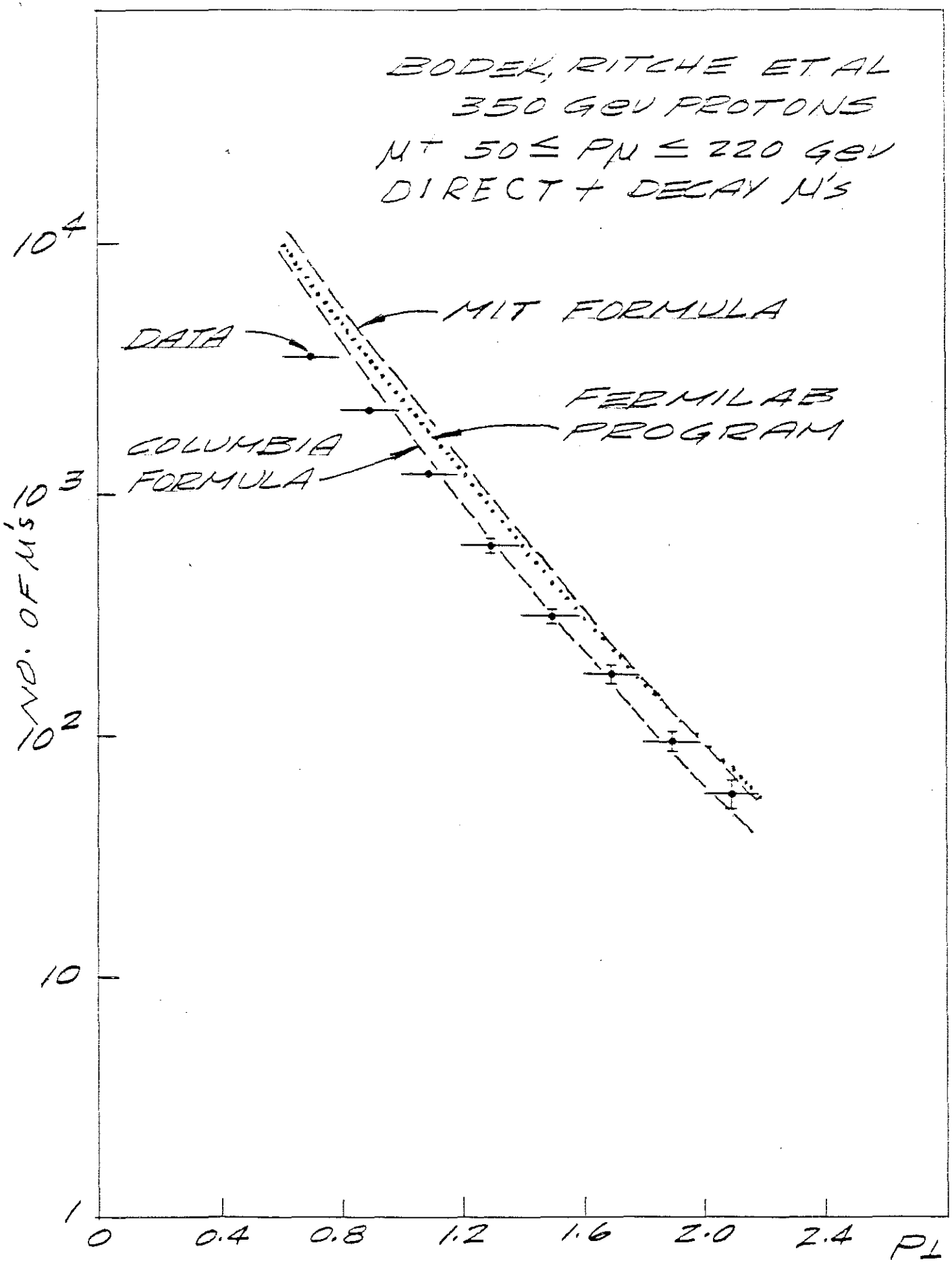
BODEK, RITCHE ET AL
350 GeV PROTONS
μ^+ $50 \leq P_\mu \leq 220$ GeV
DIRECT + DECAY μ's
MIT FORMULA
DATA
FERMILAB PROGRAM
COLUMBIA FORMULA
NO. OF μ's
10^4
10^3
10^2
10
1
0
0.4
0.8
1.2
1.6
2.0
2.4
$P_\perp$

Fig. III-13

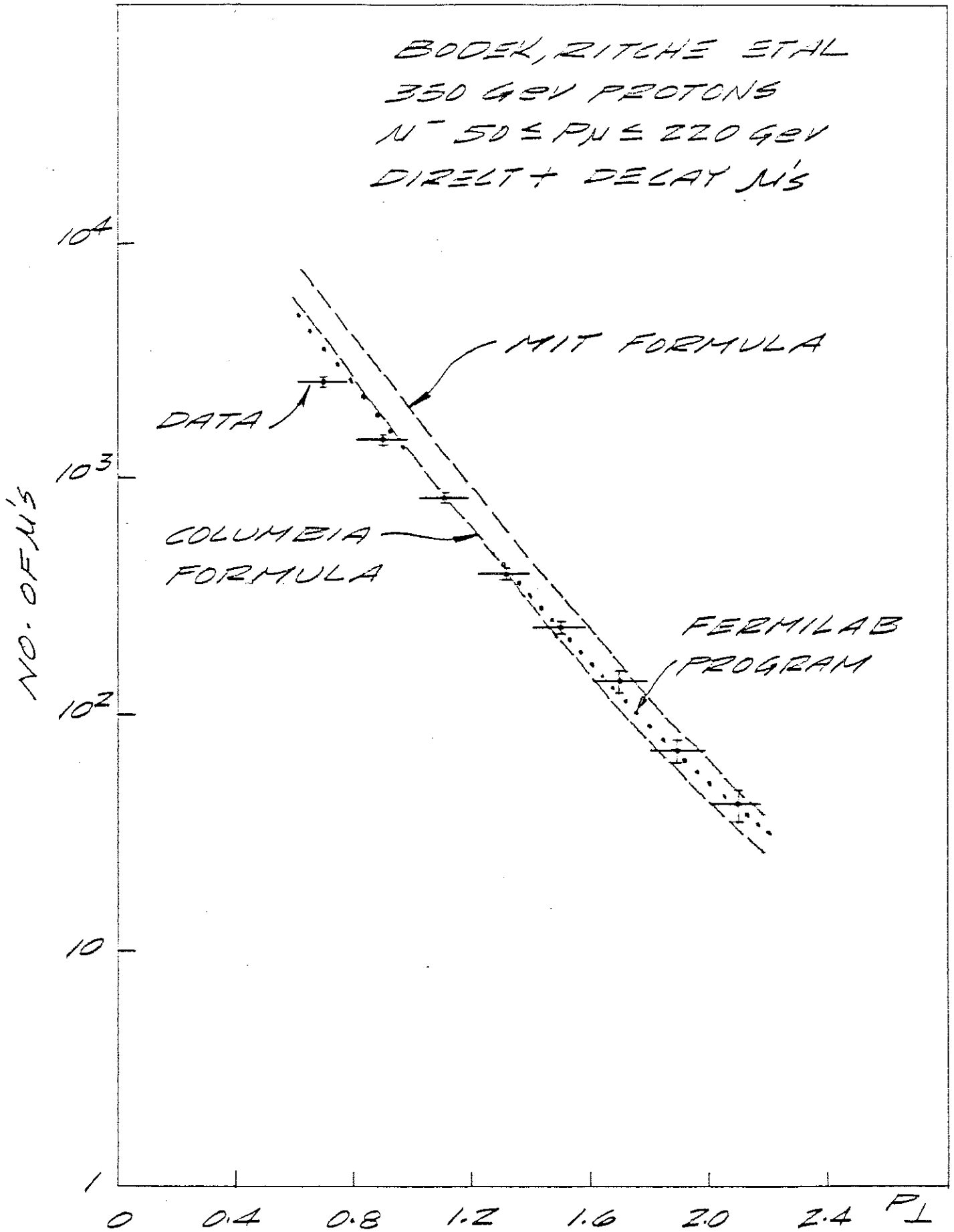
BOOEK, RITCHE ETAL
350 GeV PROTONS
μ^- $50 \leq P_\mu \leq 220$ GeV
DIRECT + DECAY μ's
MIT FORMULA
DATA
COLUMBIA FORMULA
FERMILAB PROGRAM
NO. OF μ's
10^4
10^3
10^2
10
1
0
0.4
0.8
1.2
1.6
2.0
2.4
$P_\perp$

Fig. III-14

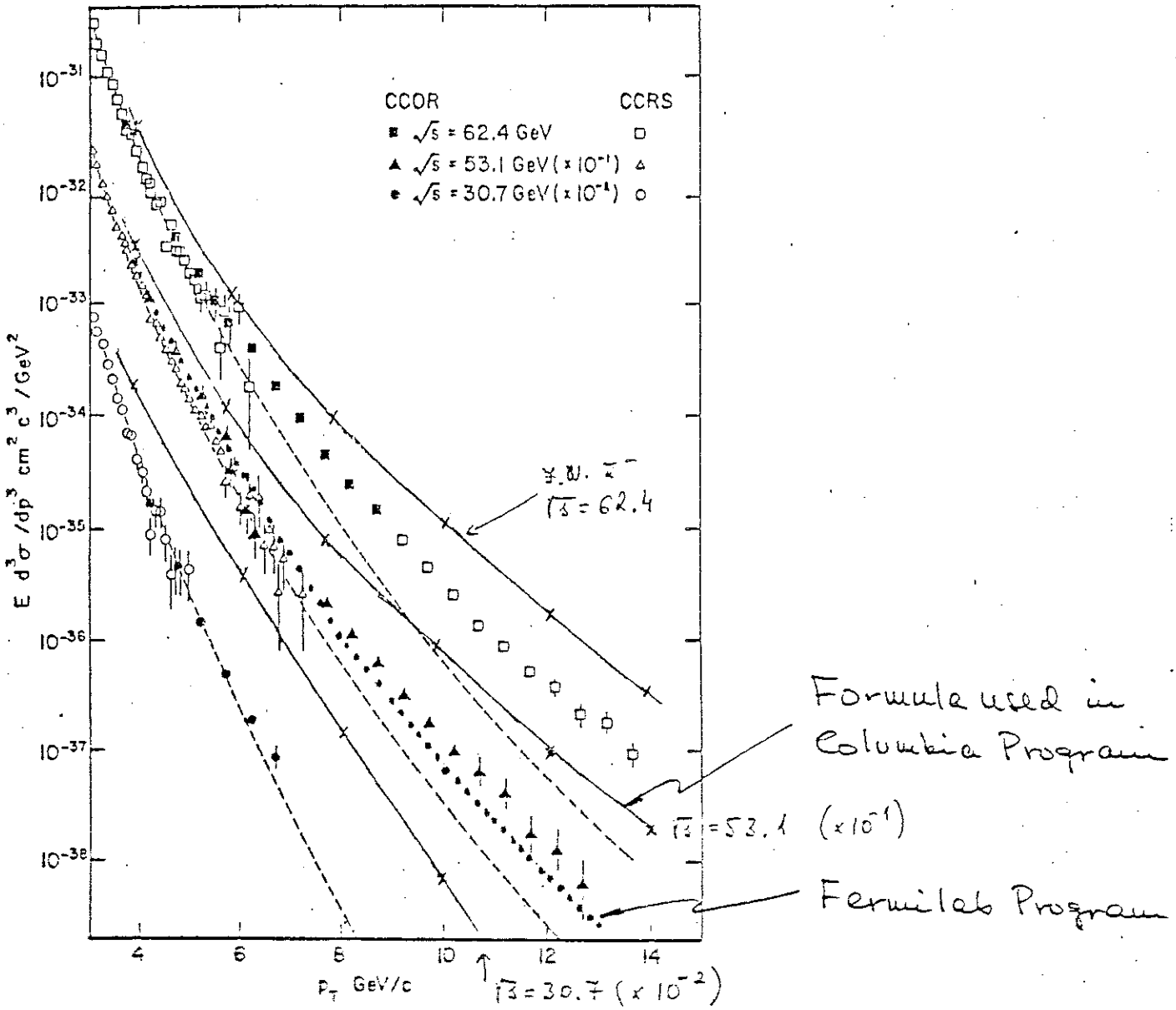
CCOR
CCRS
√s = 62.4 GeV
√s = 53.1 GeV (× 10⁻¹)
√s = 30.7 GeV (× 10⁻²)
E d³σ/dp³ cm² c³/GeV²
p_T GeV/c
Formula used in Columbia Program
√s = 53.1 (× 10⁻¹)
Fermilab Program
√s = 30.7 (× 10⁻²)

Fig. III-15

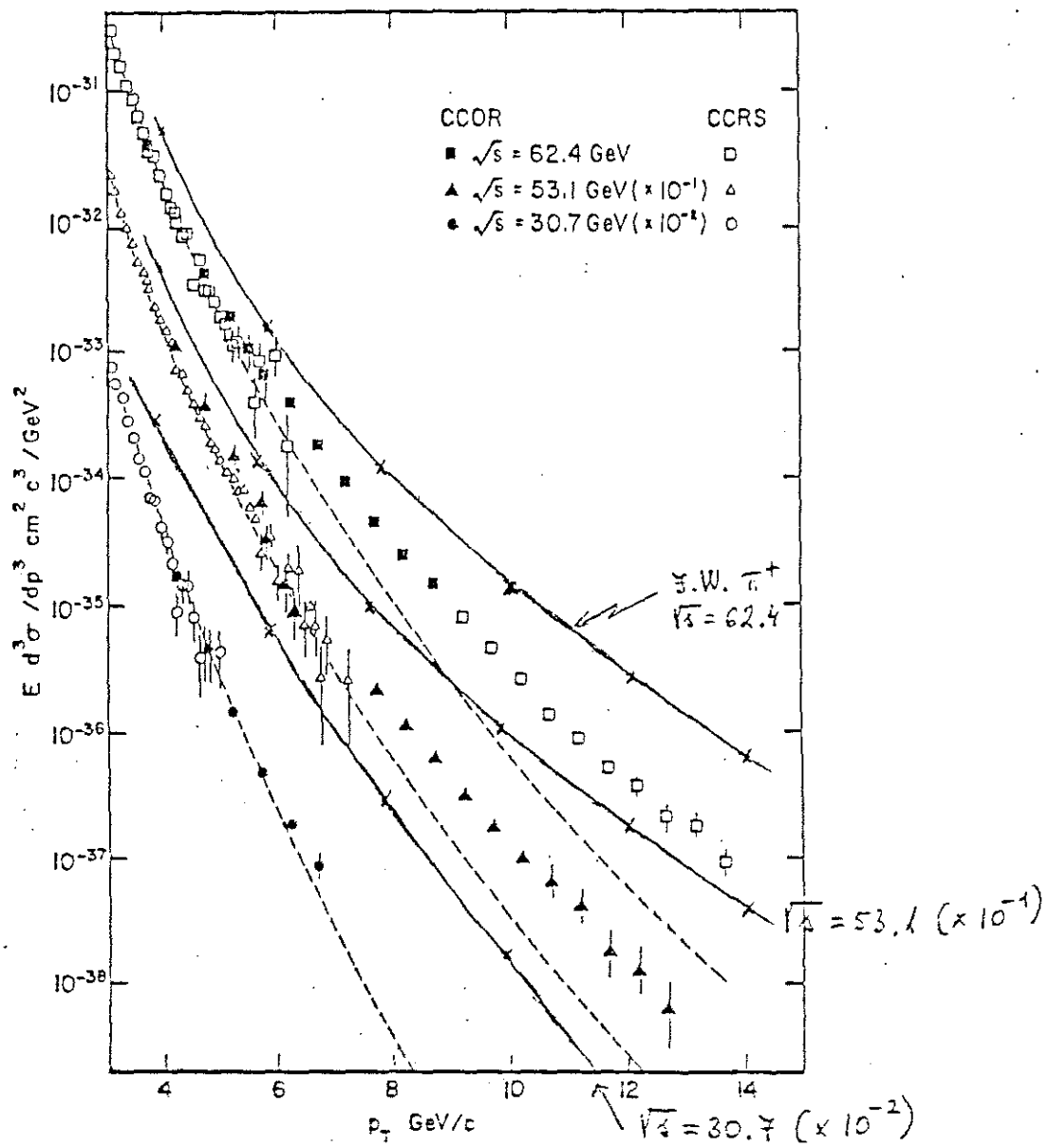
CCOR
CCRS
√s = 62.4 GeV
√s = 53.1 GeV (× 10⁻¹)
√s = 30.7 GeV (× 10⁻²)
E d³σ/dp³ cm² c³/GeV²
p_T GeV/c
S.W. π⁺
√s = 62.4
√s = 53.1 (× 10⁻¹)
√s = 30.7 (× 10⁻²)

Fig. III-16

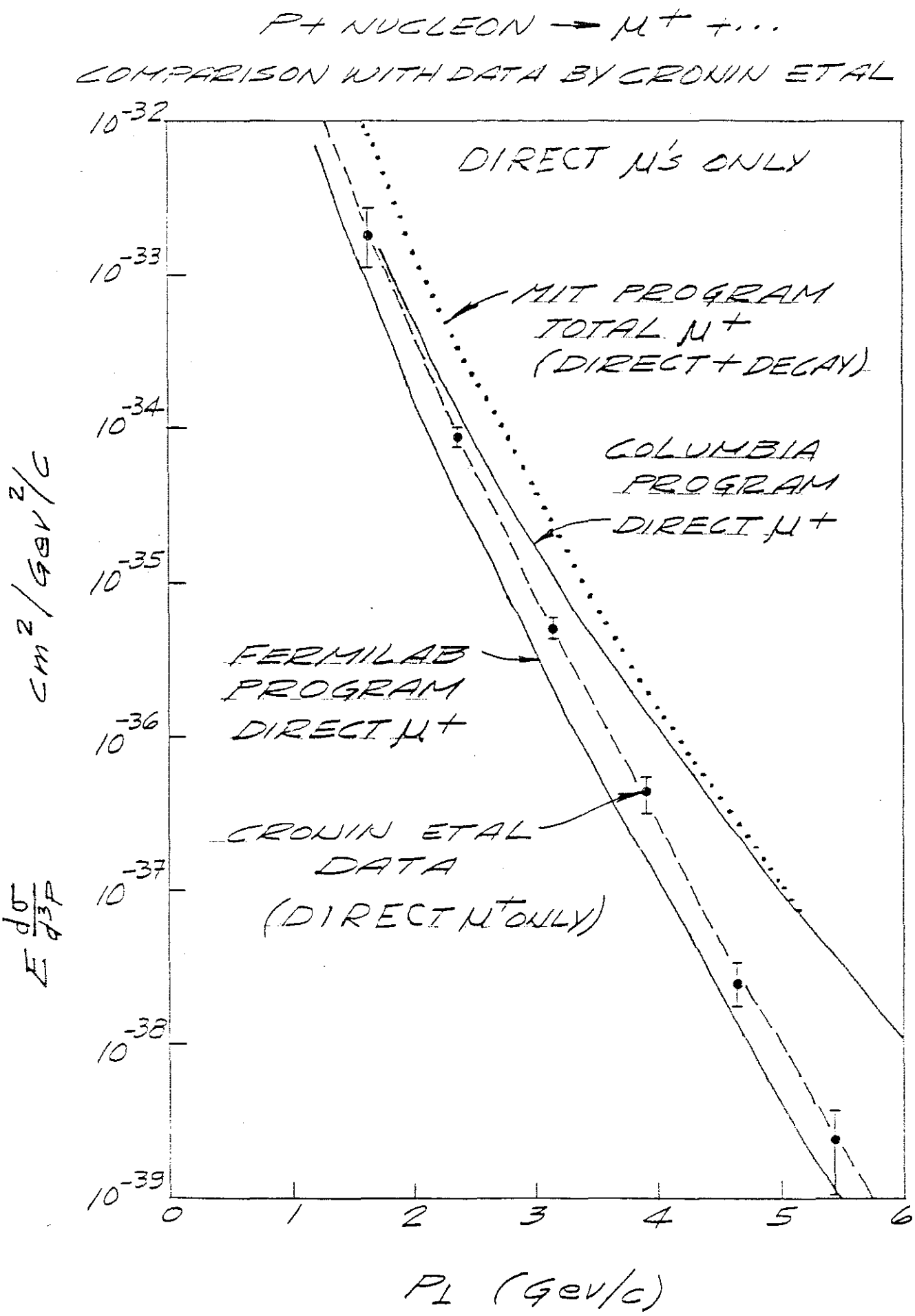
P+ NUCLEON → μ+ +...
COMPARISON WITH DATA BY CRONIN ET AL
DIRECT μ's ONLY
MIT PROGRAM
TOTAL μ+
(DIRECT+DECAY)
COLUMBIA
PROGRAM
DIRECT μ+
FERMILAB
PROGRAM
DIRECT μ+
CRONIN ET AL
DATA
(DIRECT μ+ ONLY)
$E\frac{d\sigma}{d^3p}$ $cm^2/GeV^2/c$
10^{-32}
10^{-33}
10^{-34}
10^{-35}
10^{-36}
10^{-37}
10^{-38}
10^{-39}
0
1
2
3
4
5
6
$P_\perp$ (GeV/c)

Fig. III-17

IV. Muon Spoiler Magnet Design For The Direct Neutral Lepton Facility

To obtain the largest tau-neutrino flux in the detectors, the distance from the target to the detectors must be minimized, for at any reasonable distance the tau-neutrino flux extends beyond the edge of the detectors. In an optimization of the running time versus the cost of the facility, it was decided in 1982 to set the target 160 m upstream of the 15 Foot Bubble Chamber. This optimization was the result of the following contraints and analysis of incremental costs:

1. The 15 Foot Bubble Chamber cannot be moved; thus it is the absolute position of the target which must be selected.

2. A shorter distance between the target and the chamber would increase the event rate (roughly proportional to the distance squared), but the length, and therefore the cost, of the muon spoiler magnet system would grow rapidly, and more than linearly. This effect is illustrated in Figure IV-1, which shows the 500 GeV muon cone emerging from the target, being bent upward by the spoiler magnet system, and barely missing the 15 Foot Bubble Chamber. If the distance from the target to the chamber were shortened, additional magnetic bending would need to be added at the end of the proposed magnets, and this magnet would have to have an even larger air gap than the others.

3. Conversely, a longer distance between the chamber and the target would save spoiler magnet costs, but the cost of building the primary proton beam would increase approximately linearly with distance, as illustrated in Figure IV-2. The bending magnet strings in NE8 and NLA would both have to be increased in length, and the enclosures lengthened. In addition, the data-taking time to get the same number of events would grow as the distance squared, incurring increased operating costs and beam taken away from other experiments.

Following the decision that the distance from the target to the 15 Foot Bubble Chamber should be 160m, the position of the smaller, 1-m Tohoku Chamber was selected to be 58 m from the target, as close as it could be placed without intercepting the muons (See Figure IV-1). Lab F was built for this bubble chamber and the chamber has been installed and operated.

As a design guideline we have required the muon flux in the Tohoku and 15 Foot Bubble Chambers to be less than 10 per 10^{13} interacting protons. This criterion has been satisfied by the use of large magnets to deflect the muons and by locating the detectors at about 58 meters and 160 meters from the target.

General Layout of Area

Figures IV-3 and IV-4 show a layout of the area from the target hall through Lab C, which contains the next-to-last of the neutrino detectors. The principle items downstream of the target point are listed below:

(A) A solid iron magnet, 4 m long, operated at 20 Kg, whose coil can be installed and removed through the target box, called M1.

(B) A second solid iron, 5 m long, 20 Kg magnet, called M2. This magnet cannot be moved once it is installed and surrounded by shielding.

(C) Large air-gap magnets whose purpose is to deflect muons away from the detectors.

(D) The new Tohoku Bubble Chamber and its associated active and passive shield.

(E) Lab E which exists and contains an electronic neutrino detector.

(F) Passive shielding for low energy background radiation.

(G) The 15 Foot Bubble Chamber.

(H) Lab C which exists and contains an electronic detector.

(I) Experiment 635 (not shown).

(Cross sections of the spoiler magnets can be found in Chapter III of this Conceptual Design Report, Figures 4 through 8.)

Here we shall briefly review the general characteristics the first three items. The target box magnet, in addition to bending muons, limits residual activity to less than about 1 R at its downstream face (after zero cooldown time) where electrical and water connections are made. This radiation limit requires that the length of the magnet to be not less than 4.0 m. We have chosen this length because a larger magnet would be impossible to service through the Target Hall. The second magnet, in addition to contributing to the sweeping action on muons, attenuates the neutron flux from the dump target. At the downstream face of the magnet there is a tolerably low neutron flux such that the bubble chambers can operate successfully at 58 and 160 m respectively.

The design of the remaining large magnets for deflection of muons out of the detectors has demanded an exhaustive and extensive study. The primary beam energy was assumed to be 1000 GeV.

The number of ≧ 800 GeV muons produced in a target is adequately low that they may be permitted to strike detectors. To sweep out 800 GeV/c momenta imposes a lower limit to the integral magnetic field bending power. This corresponds to about 600 Kg-meters, including the two solid-iron magnets mentioned above. The transverse dimensions of the magnetic field must be such that all muons of greater than about 40 GeV/c and $P_t \leq 10$ GeV/c must also be swept out of line of the detectors otherwise the fluxes are unacceptably high.

Extensive studies, involving many iterations through system design followed by Monte-Carlo evaluation, led to the following necessary properties for the remaining magnets (following M1 and M2):

1. They must be air-gap magnets, in order to avoid any further deep-inelastic scattering or trident production from the high-energy muons passing through the gap.

2. In order to sweep out the high-P_t muons which first get bent back towards $P_t = 0$, the total field integral of the system (including M1 and M2) must be 660 Kg-m.

3. These additional magnets must be able to sweep away the wrong-sign muons produced by trident production in M1 and M2. In satisfying this requirement, a very subtle effect was discovered: a wrong-sign muon of medium or high energy near the lower edge of the field region needs to see either the full field (in order to be kicked up to above the detectors) or no field at all (in order to continue to drift down to below the detectors). This led to the requirement that the field fall from 20 Kg to 0 as quickly as is practical, which led to vertically "thin" coil packages and rather high current densities.

4. After the field falls abruptly to zero, the field must remain near zero for a considerable distance in order that medium-energy (25 to 70 GeV) muons are not bent back towards the detectors in the return leg of the steel, but rather continue on into the dirt. This effect is illustrated for 60 GeV muons in Figure IV-5. The result is that these final magnets are very deep C-magnets, with the bottom return leg several meters below the air gap.

5. The "band-pass" energy is that energy range in which muons swept down by M1 and M2 do enter the return legs of the final magnets and are swept back towards the detectors. This energy region has been chosen to be 20±5 GeV, which is low enough that these muons can be ranged out by concrete shielding judiciously placed just above the return leg (see Figure IV-6 for an illustration at 25 GeV), which these muons intercept after leaving the iron return leg.

6. Because of criterion (4) above, these magnets involve an unusual amount of steel, mostly contained in the tall vertical side legs. Steel, not copper coils, dominate the cost of magnets. Therefore it is desirable to push the steel well into saturation with extra copper and amp-turns, in order to keep the steel as short as is feasible. On the other hand, pushing to too high a field would violate criterion (3) above, and also increases power and copper costs much faster than linearly with field. A field of 20 Kg was found to be an approximate optimization.

Figure IV-3 shows a layout of the six magnets required in this design. A preliminary engineering design of this system has been made by R. Fast of Research services (see below). The magnetic field profiles of the magnets have been calculated and included in the programs which calculate the muon fluxes. The D.C. power requirement is 4.1 MW. However, it has been shown that the magnets can be pulsed to match the repetition rate of the Tevatron and thereby reduce power consumption to about 1.1 MW.

When the proton beam is targeted at non-zero angle relative to the detector axis, it is necessary to move the air-gap magnets sideways to align the air-gap region with the region of high muon flux. Under these conditions, the muon rate into any detector for production angles in the range 0 - 40mr is acceptably low as defined earlier.

Muon Fluxes From The Dump

Muon fluxes in the Tohoku and 15 Foot Bubble Chambers have been calculated independently by the three programs described earlier. These fluxes are for the case of a full density tungsten target and include prompt and non-prompt muon production sources. Final results are shown in the attached table. The calculations refer to:

I. Columbia

II. Hawaii-Fermilab

III. MIT

The results of the different calculations are in good agreement with each other as they were in the case of the E-613 shield calculation. It can be seen that no more than a few muons per 10^{13} protons at 1000 GeV are expected in either of the bubble chambers.

Table IV-1

Muons per 10^{13} proton in each of the two bubble chambers from three physical processes and the three computer programs, for 1000 GeV incident protons and spoiler magnets M1 through M6.

		1m B. C.			15 Foot B. C.		
		CALCULATION			CALCULATION		
		I*	II*	III*	I	II	III
Coulomb Scattering	μ^+	0.3	0.2	0.5	<0.1	<0.1	<0.1
	μ^-	0.3	0.5	0.5	<0.1	<0.1	<0.1
Deep Inelastic Scattering	μ^+	0.2	<0.1	<0.1	<0.1	<0.1	<0.1
	μ^-	<0.1	<0.1	0.5	0.1	0.1	1.0
Trident Production	μ^+	0.5	0.1	1.5	<0.1	0.7	0.2
	μ^-	0.2	0.1	0.5	0.5	0.2	0.5
Total		1.6	1.1	3.6	1.0	1.3	2.0

* I = Columbia

II = Fermilab

III = MIT

Some general comments on muons from the various sources is of interest.

i. Coulomb Contribution

a. Muons in the band pass energy.
This source may be the most serious if the design is not done properly because of the potentially very high intensity. In the present designs, the band pass energy is around 20 GeV which is sufficiently low so that the muons can be absorbed in the passive shield inside the magnets. There is no resulting muon contribution from this source.

b. Muons with Threshold Energy
Other than the muons in the band pass, there are muons which barely escape out of the dump with energy around and less than 1 GeV. These low energy muons may scatter with a very large angle and hit the chambers. Although the muons can be absorbed in the passive shield in front of the chambers, it is safer not to have them in the first place. To eliminate the problem, a small magnet (called spoiler) with low field could be placed so that it kicks away the low energy muons that just emerge from the absorber in the magnet M2. There is also no resulting muon background contribution from this source.

c. Muons get caught in the fringe field.
As shown below, the field of the C-magnets extends beyond the coil, unlike in a solid iron magnet, in which there is a sharp cut off of magnetic field. Because the field around the coil is neither strong nor weak there are muons with energy of around 40 GeV and vertical P_t of around ±5 GeV which get caught and bent back toward the detectors. The muon background to the 1m Bubble Chamber from this process is ~2. There is no contribution to the 15 Foot Bubble Chamber from this process.

ii. Muons Scattered Deep Inelastically.

Since both systems are designed so that high energy muons with high intensity do not pass through much material in the dump, the design has no serious problems from this source.

iii. Trident Production.

Any trident produced inside a magnet field is potentially dangerous. As mentioned earlier, this is the reason for air-gap magnets. The major source of tridents is the pole face of the magnets which are hit by high P_t muons. There are two muons in the background in the 1m chamber. Another source of tridents for the 15 Foot Bubble Chamber is the magnet yoke of the 1m chamber. One

sign of muon produced in the magnet bends toward the 15 Foot Bubble Chamber, and this gives about five muons as background. Modification of the 1m Bubble Chamber magnet yoke has been completed. A slot in the magnet was made so that high intensity muons do not interact. With the slot the background gets better by a factor of six so that there is less than one muon in the 15 Foot Bubble Chamber Another reason for the slot is to reduce the background in the downstream detectors of the 1-m Bubble Chamber. It is found that without the slot there are about 20 muons in CRISIS from tridents produced in the magnet. With this slot the number drops by about a factor of five.

Magnet Requirements

Bo = central field = 2.0 T

ΔB = variation of central field = ±0.1 T

$\int Bdl$ = 48 T-m (1575 kG-ft)

$(-B_x)_{max}$ = maximum value of reversed horizontal field component outside aperture ("fringe field"):

0.1 T above coil

0.2 T below coil

$B_x(y)$ should drop quickly outside the aperture

The above tolerances on ΔB and fringe field are very easy to achieve and put very little demands on the precision of the assembly and steel quality.

A C-magnet style with racetrack coils was chosen to avoid tall, narrow magnets. In order to reduce the power requirements, a pulsed current design was considered.

Calculations

The magnetostatic problem was solved in two dimensions, the x-y plane, using the program LINDA. The program calculates horizontal and vertical field components as a function of position in the x,y plane of longitudinal symmetry, B_x (x,y,0) and B_y (x,y,0). The value of the horizontal component on the mid-plane, B_x (0,y,0), for each of the four magnets is given in Table IV-2.

Calculations in the y,z plane, giving B_y (0,y,z) and B_z (0,y,z), will be done as part of the final design.

In the calculations the coils were sized such that the current density was approximately 2900A/in^2 (450 A/cm^2). At current densities much higher than this power requirements become large and pulsing more difficult. Lower current densities, with larger coils, result in the field dropping too slowly outside the aperture.

The coil inductances were calculated from $L = N\phi/I$ = flux linkages per amp. The DC power was obtained from $PDC = \rho J^2 V$ (ρ = resistivity, V = volume of copper in coil) and the resistance $R = PDC/I^2$.

Coil and Iron Parameters

The parameters of magnets which were found by S. Oh to be satisfactory are given in Table II, Chapter III of this Conceptual Design Report.

Pulsing the Magnets

The magnets must be pulsed to reduce the AC power requirements. They will be ramped from some low current, a few hundred amperes, to 5 kA and back down once per one minute Tevatron beam pulse.

Preliminary calculations, using the parameters of Table II, show that the magnet circuits can be charged and discharged in one minute, reducing the power dissipation to about one third of the DC value.

Table IV-2

Mid Plane Field Distribution

Vertical Position (cm)	B_x in tesla for magnets M3	M4	M5	M6
400	-0.007	-0.010	-0.010	-0.012
350	-0.009	-0.013	-0.013	-0.015
300	-0.012	-0.018	-0.017	-0.020
250	-0.016	-0.023	-0.022	-0.026
200	-0.020	-0.027	-0.022	-0.030
150	-0.003	-0.026	-0.015	-0.021
100	0.440	0.961	1.209	0.958
50	1.927	1.944	1.951	1.944
0	2.000	2.000	2.000	2.000
-50	1.928	1.947	1.944	1.947
-100	0.425	0.953	1.214	0.947
-150	-0.038	-0.018	0.050	-0.032
-200	-0.051	-0.075	-0.072	-0.092
-250	-0.039	-0.066	-0.069	-0.082
-300	Iron	-0.052	-0.058	-0.069
-350	Iron	-0.034	-0.048	-0.058
-400	Iron	Iron	-0.036	-0.048
-450	Iron	Iron	-0.015	-0.037
-500	Iron	Iron	Iron	-0.022

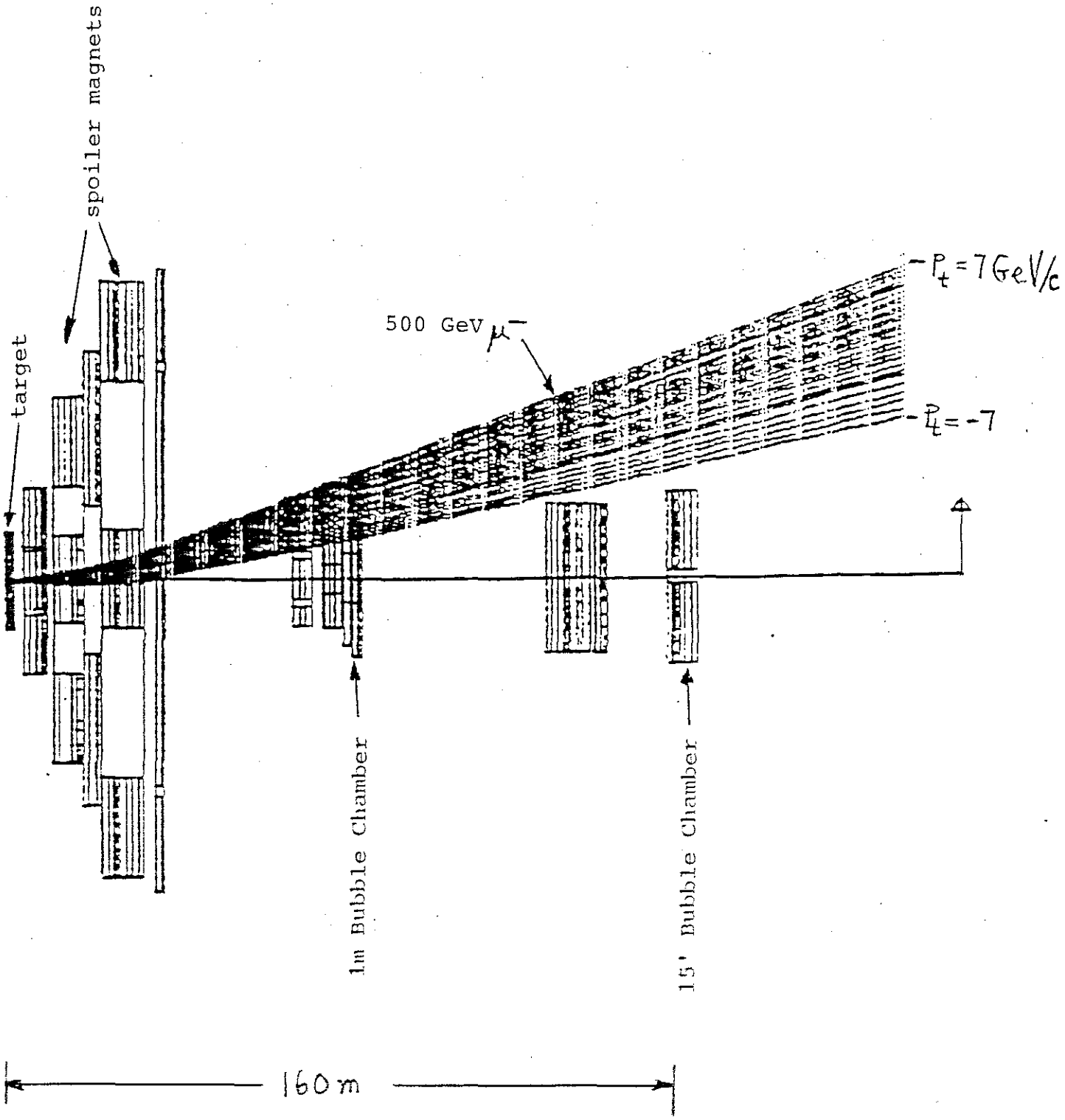
spoiler magnets
target
500 GeV μ^-
$P_t = 7$ GeV/c
$P_t = -7$
1m Bubble Chamber
15' Bubble Chamber
160 m

Fig. IV-1

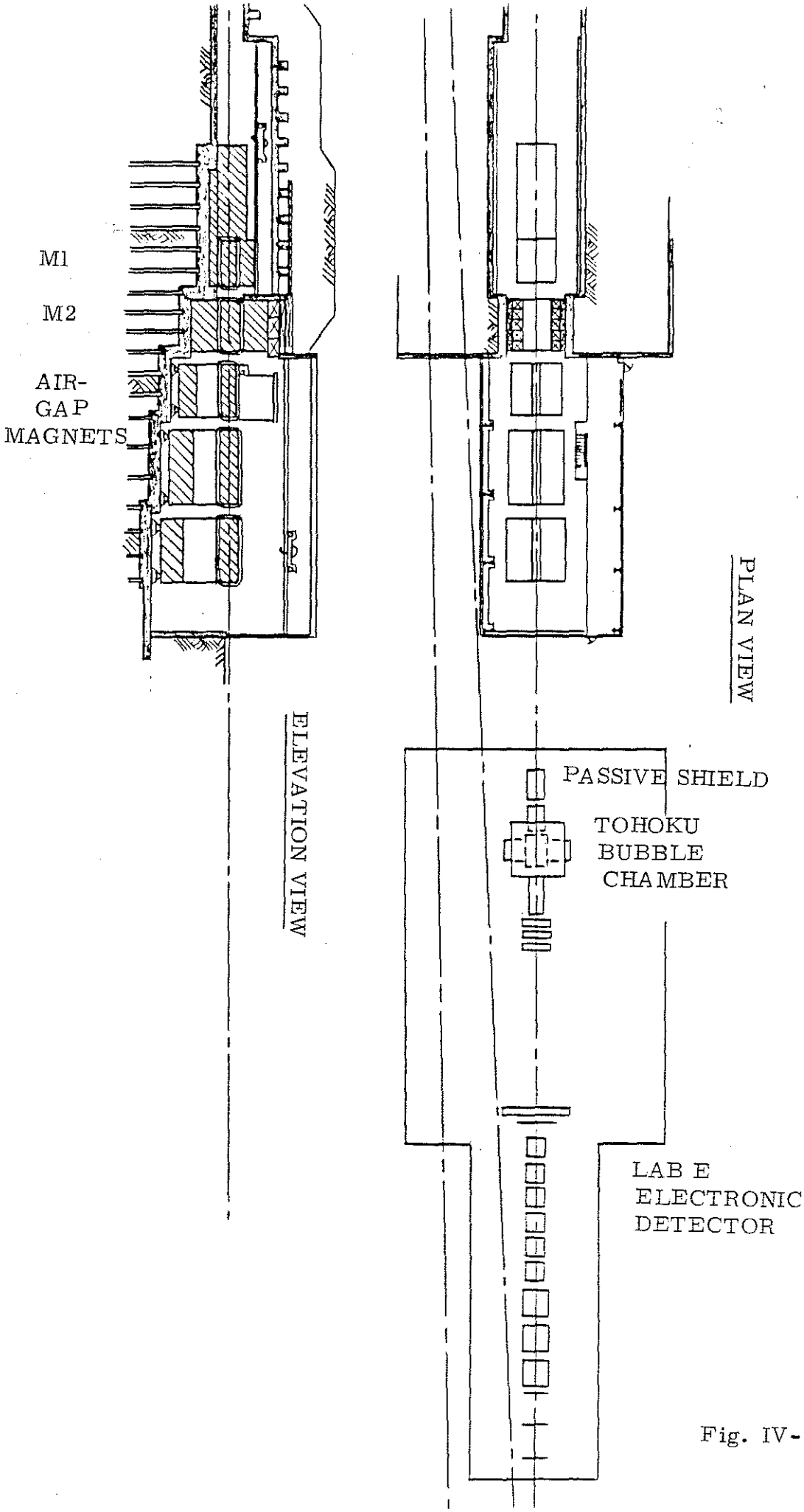
M1
M2
AIR-
GAP
MAGNETS
ELEVATION VIEW
PLAN VIEW
PASSIVE SHIELD
TOHOKU
BUBBLE
CHAMBER
LAB E
ELECTRONIC
DETECTOR

Fig. IV-3

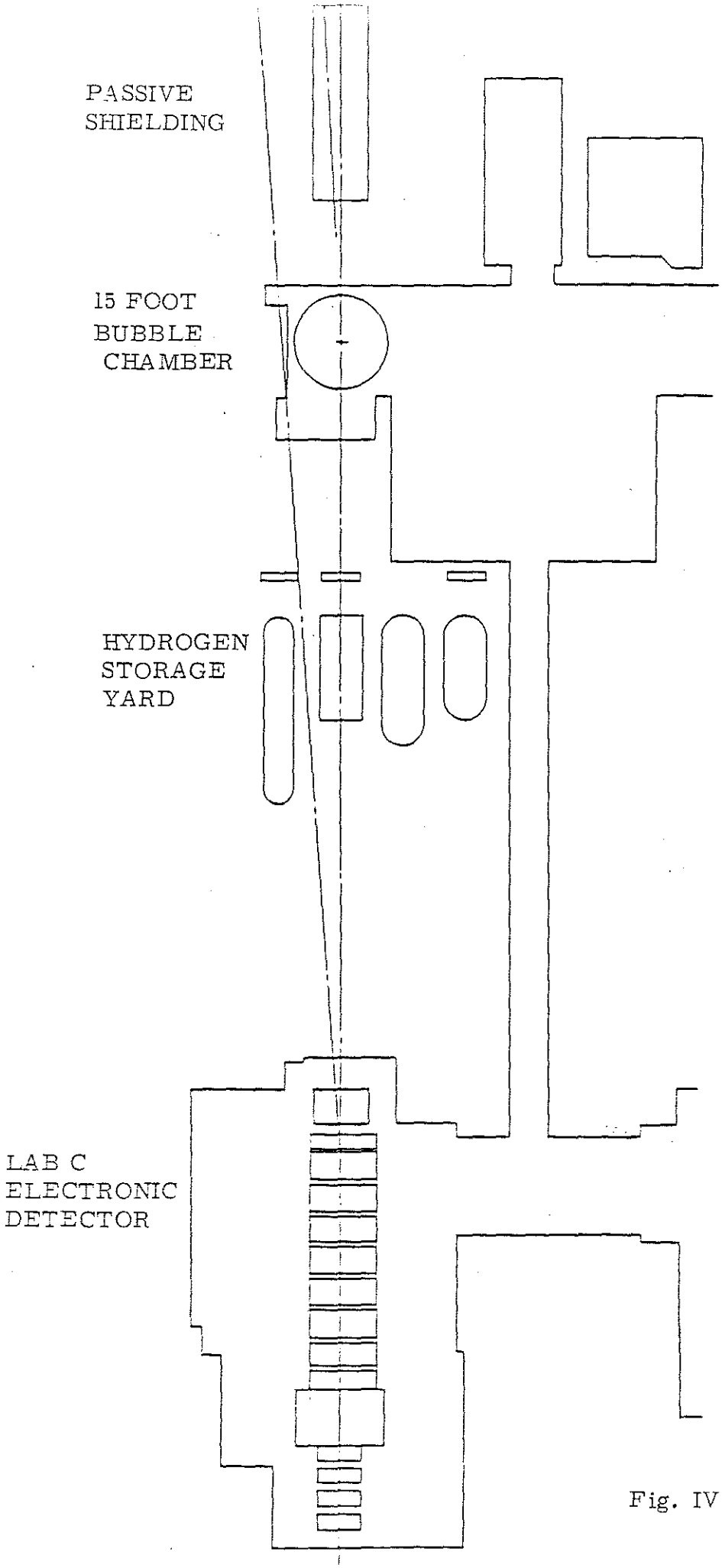
PASSIVE
SHIELDING
15 FOOT
BUBBLE
CHAMBER
HYDROGEN
STORAGE
YARD
LAB C
ELECTRONIC
DETECTOR

Fig. IV-4

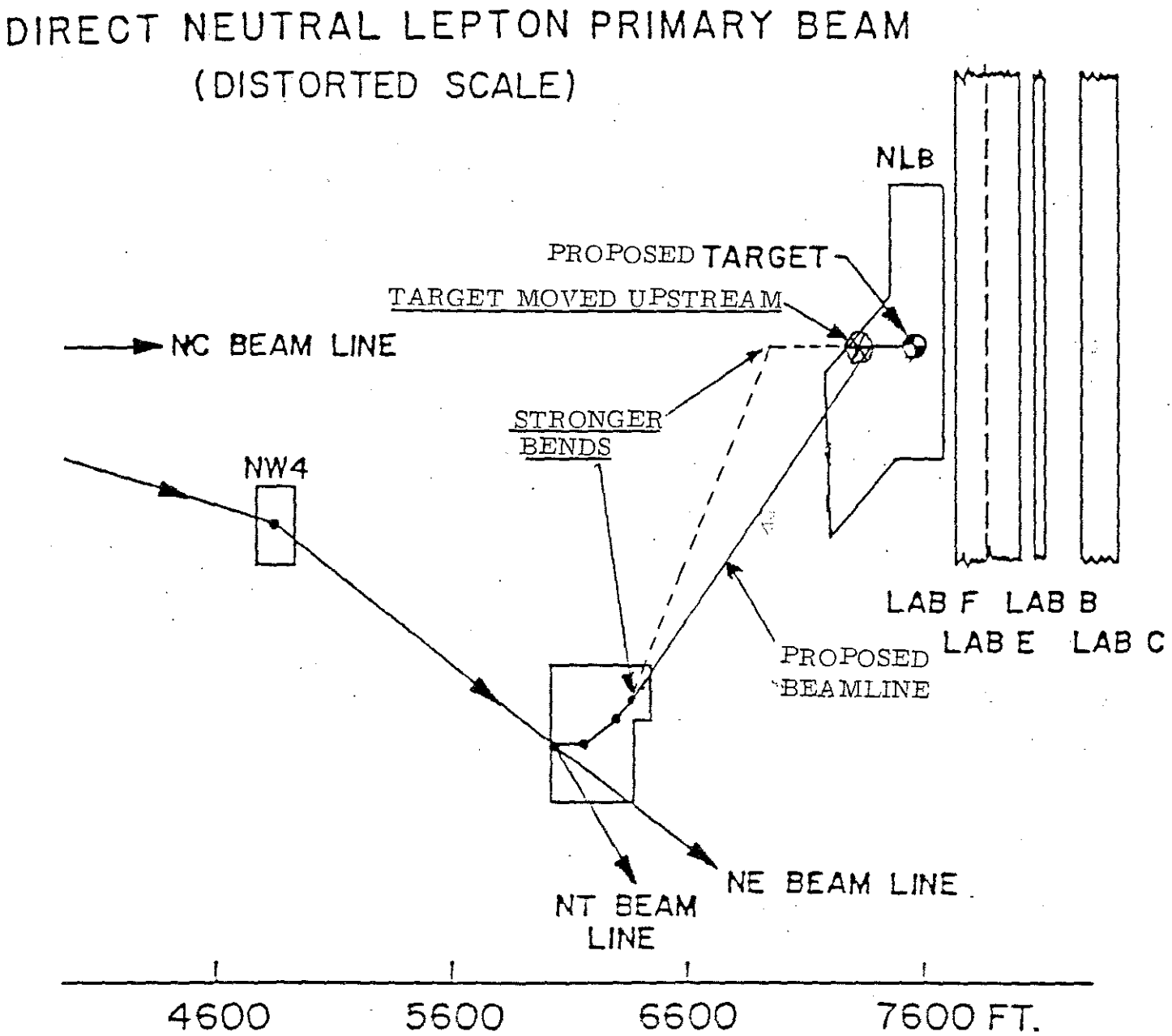
DIRECT NEUTRAL LEPTON PRIMARY BEAM
(DISTORTED SCALE)
NLB
PROPOSED TARGET
TARGET MOVED UPSTREAM
NC BEAM LINE
STRONGER BENDS
NW4
LAB F
LAB B
LAB E
LAB C
PROPOSED BEAMLINE
NE BEAM LINE
NT BEAM LINE
4600
5600
6600
7600 FT.

Fig. IV-2

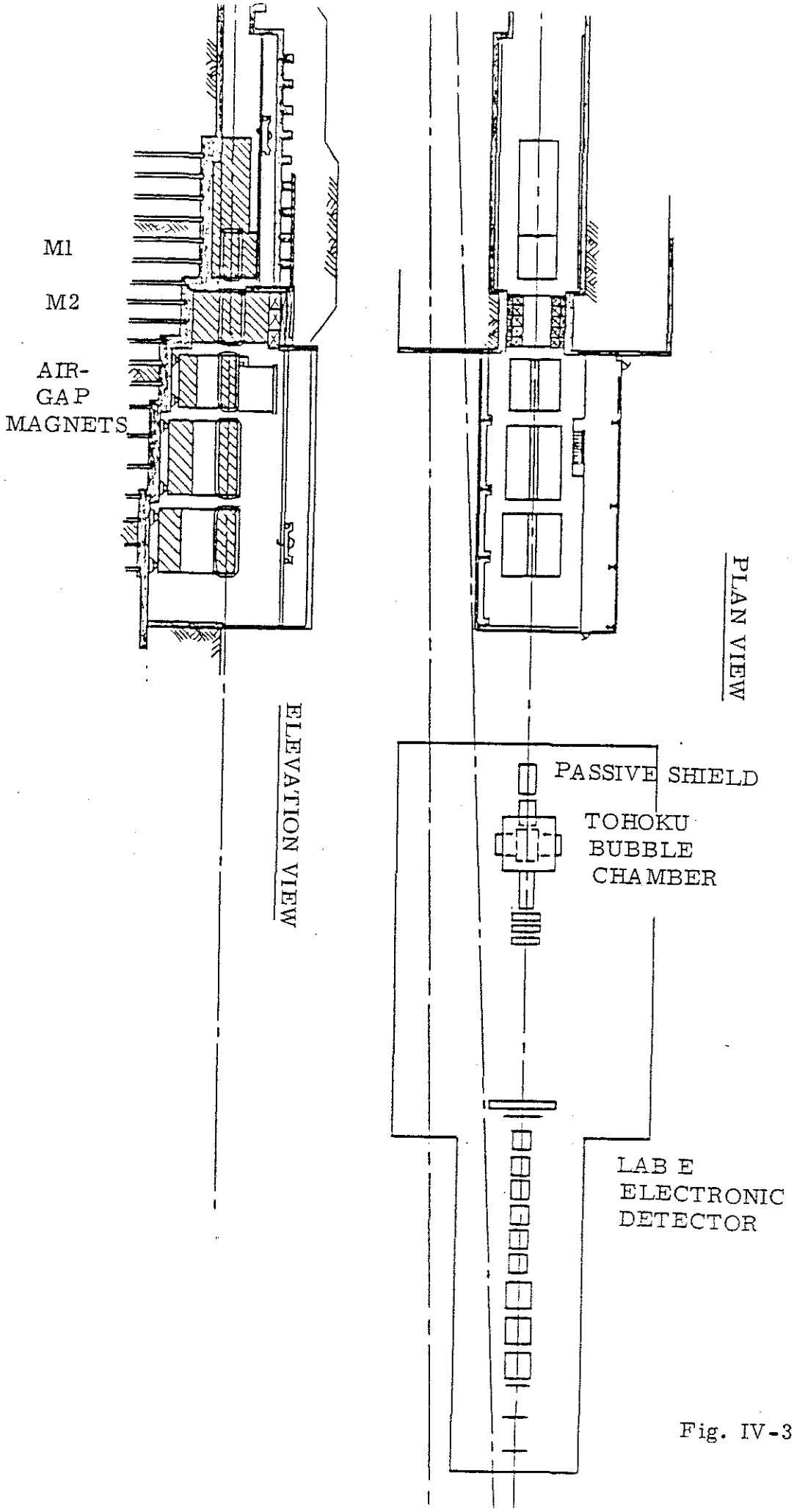
M1
M2
AIR-
GAP
MAGNETS
ELEVATION VIEW
PLAN VIEW
PASSIVE SHIELD
TOHOKU
BUBBLE
CHAMBER
LAB E
ELECTRONIC
DETECTOR

Fig. IV-3

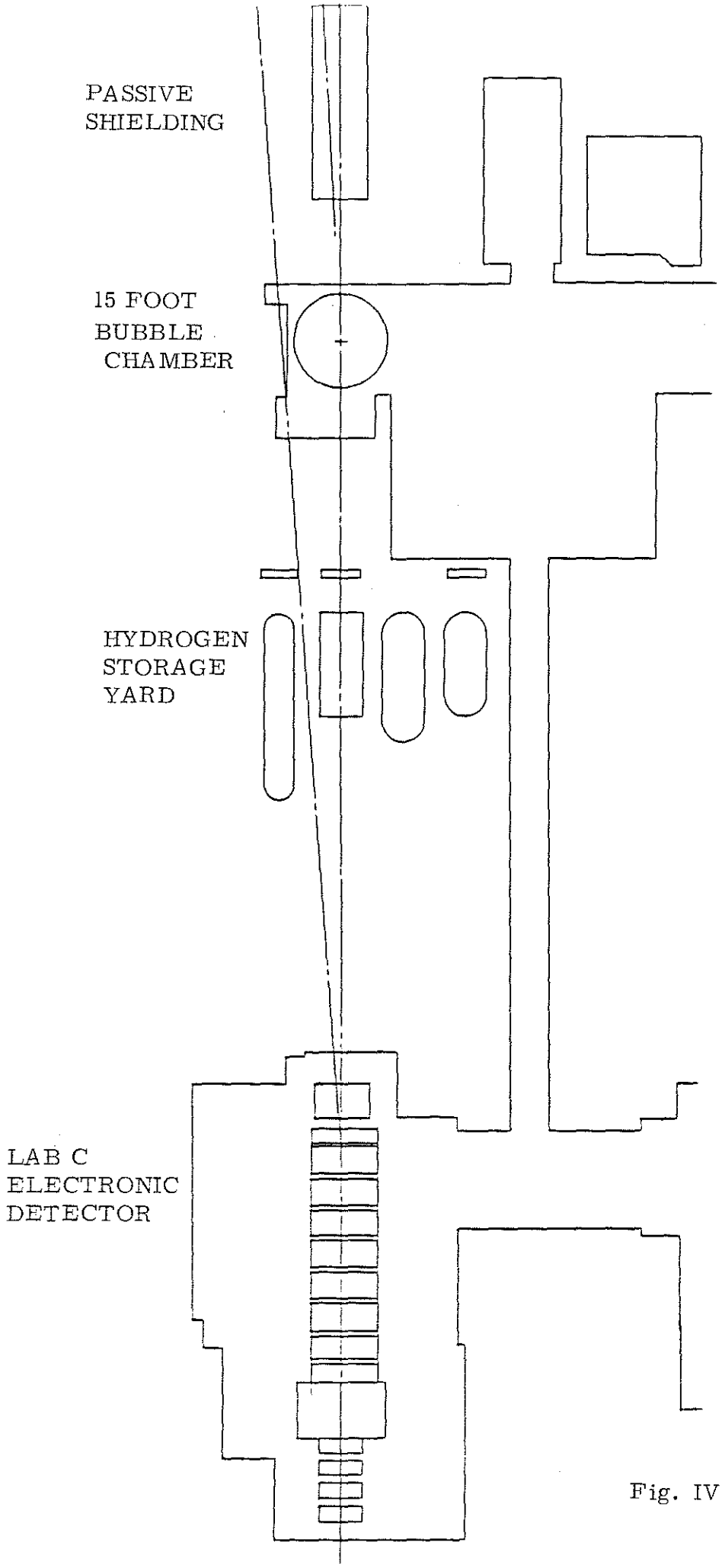
PASSIVE
SHIELDING
15 FOOT
BUBBLE
CHAMBER
HYDROGEN
STORAGE
YARD
LAB C
ELECTRONIC
DETECTOR

Fig. IV-4

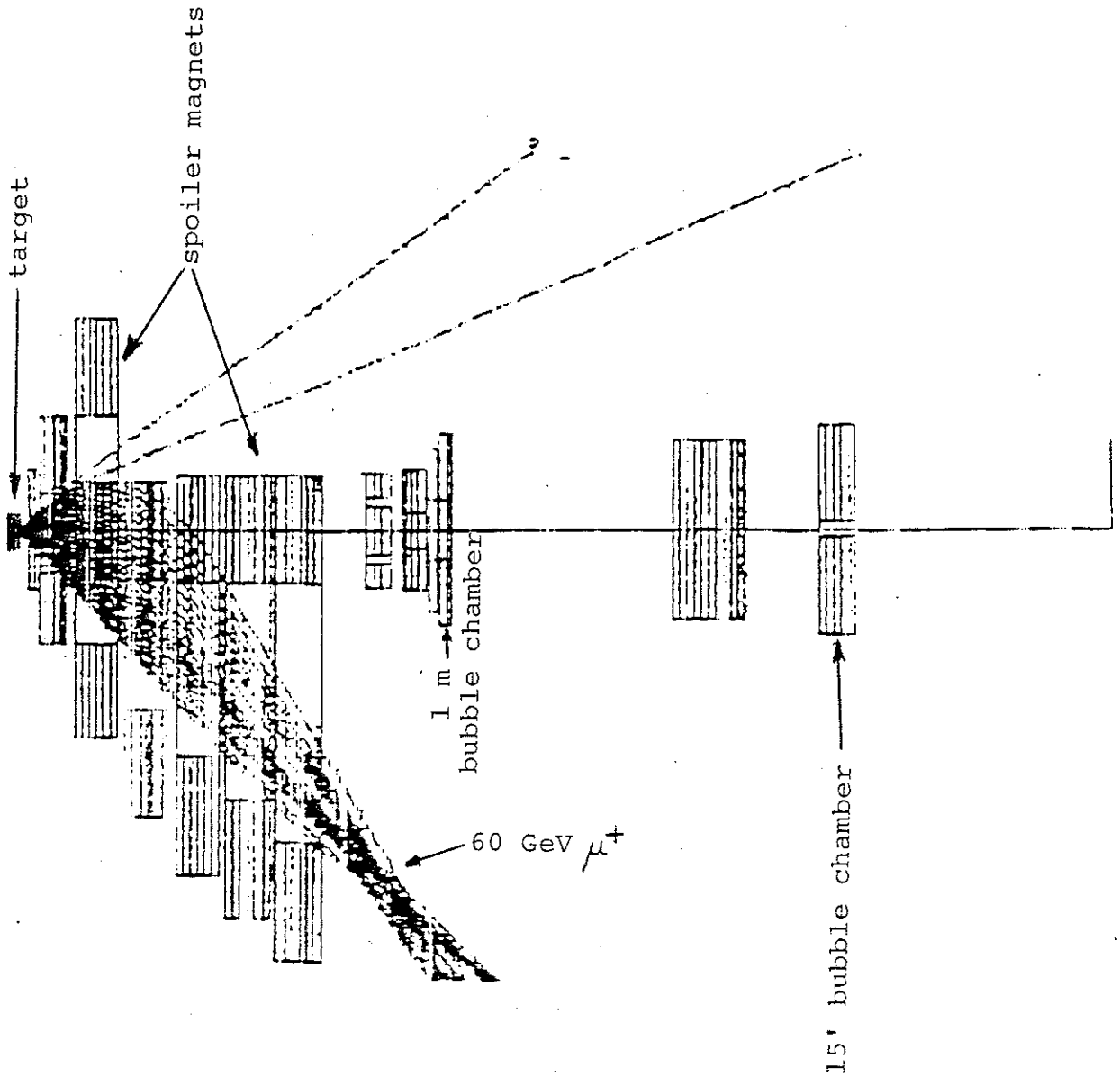
target
spoiler magnets
1 m
bubble chamber
60 GeV μ^+
15' bubble chamber

Fig. IV-5

25GeV

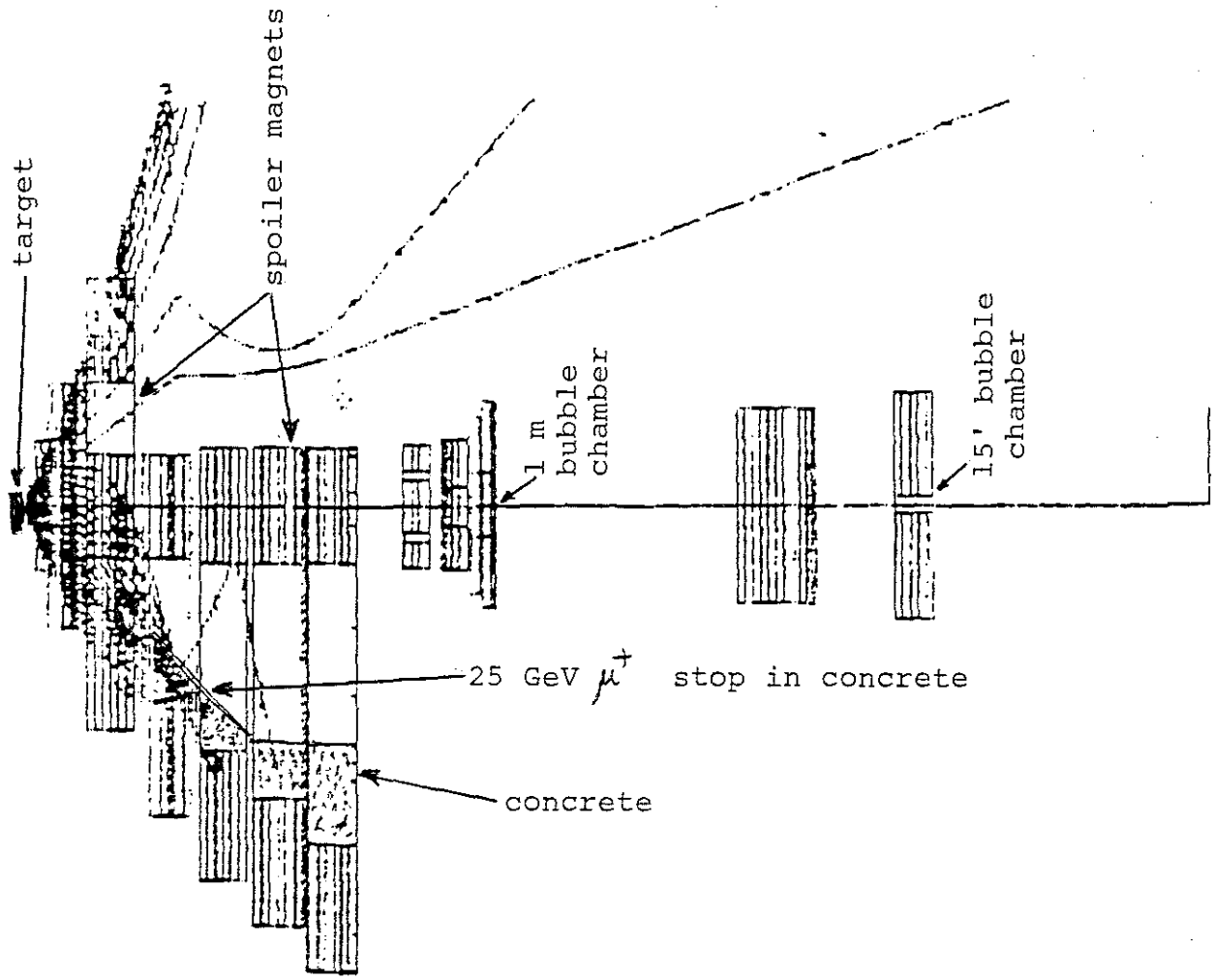

Fig. IV-6

V. Redesign of the Spoiler System for 900 GeV Incident Protons

Motivation and Consequences

Some number of people believe that the fixed target program at Fermilab will never operate at an energy higher than 900 GeV, or at least not at high intensity, because of extraction losses. Should this belief prove to be true, then a 900 GeV design for the Direct Neutral Lepton Facility is fully justified. There is not even any physics lost.

Therefore, the proponents of the Direct Neutral Lepton Facility undertook, in the summer of 1984, to redesign the muon spoiler system for 900 GeV, knowing that shortening the length of the spoiler magnet system saves expensive magnets in a manner in which the total spoiler magnet costs drop faster than linearly with momentum. A redesign has been completed, but not as fully optimized as was the 1000 GeV design.

The beamline has also been designed for 900 GeV, but the capability of pushing it to 1000 GeV by the addition of more power supplies has been preserved.

Should the machine ever extract 1000 GeV protons, then one has two choices. If the muon background at 900 GeV has been small, one can upgrade the beamline and try 1000 GeV. Alternately, one can extract 900 GeV protons to the dump on a "front porch" in the accelerator ramp, and then accelerate the remainder of the protons to 1000 GeV for the remaining users. This latter option may even be attractive to the accelerator operations, if the intensity at 1000 GeV is limited by extraction losses.

The flux of tau neutrinos may go down as much as a factor of two between 1000 GeV and 900 GeV (Morfin suggests only 20% in TM-1275), which may sound like a loss of physics. However, this potential loss is more than offset by the greater proton intensity and accelerator reliability available at 900 GeV.

A Particular Redesign

Hand calculations indicated that removing M6 from the original 1000 GeV design would exactly satisfy the needs of a 900 GeV system. Deleting this magnet would save 19% of the total costs of the spoiler system (based on 1982 estimates), or $2.0M (based on the appropriate fraction of the 1985 cost estimate for M1-M5).

This particular redesign has been run through one of the three Monte Carlo programs by Seog Oh at Duke University using the MIT program. This program gave the highest muon rates in two bubble chambers at 1000 GeV and is therefore regarded as the most pessimistic, or conservative of the three programs.

The results are that the contributions from deep inelastic muon scattering and trident production are the same as shown in Table IV-1, but the contributions from Coulomb scattering have increased to about two in the Tohoku Chamber (total visible volume) and to about 0.5 in the fiducial volume of the 15 Foot Chamber, with another 3.0 between the fiducial volume and the camera lenses. This increase is still within the design criterion of less than 10 muons per 10^{13} protons.

The Monte Carlo program data for the number of muons of all momenta as a function of distance above (or below) each chamber are shown in Figure V-1 and 2, for both the 900 GeV design (M1-M5) and the 1000 GeV design (M1-M6). It should be noted that the source of the few muons which enter the bubble chambers is high P_t muons. The MIT program, as noted in Section III of this appendix, is known to overestimate high P_t muons by a factor five to 10, compared with 300 GeV data and ISR data. Therefore, we believe that the above estimates are very conservative upper limits.

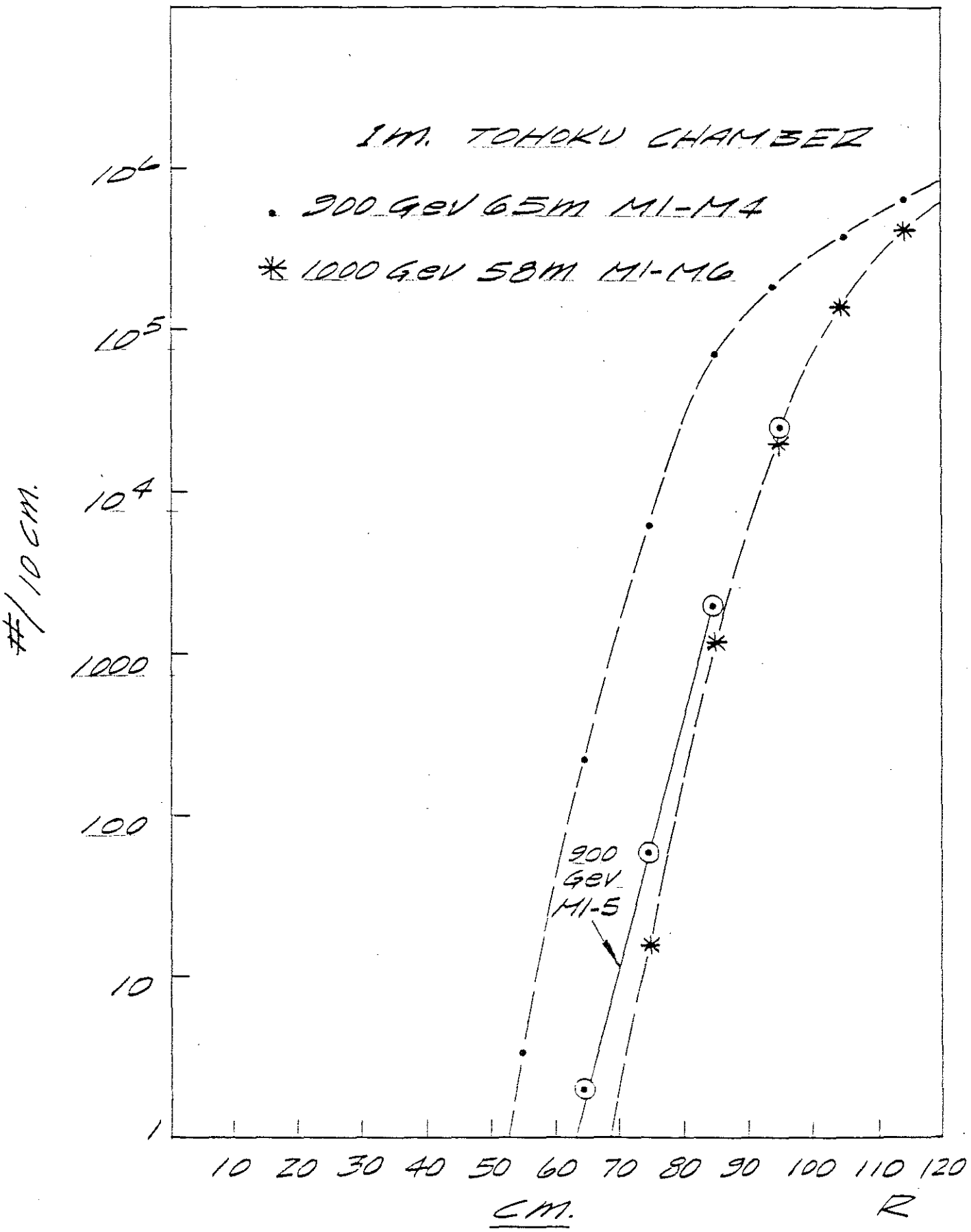
1M. TOHOKU CHAMBER
• 900 GeV 65M M1-M4
* 1000 GeV 58M M1-M6
900 GeV M1-5
#/10 CM.
10⁶
10⁵
10⁴
1000
100
10
1
10 20 30 40 50 60 70 80 90 100 110 120
CM.
R

Fig. V-1

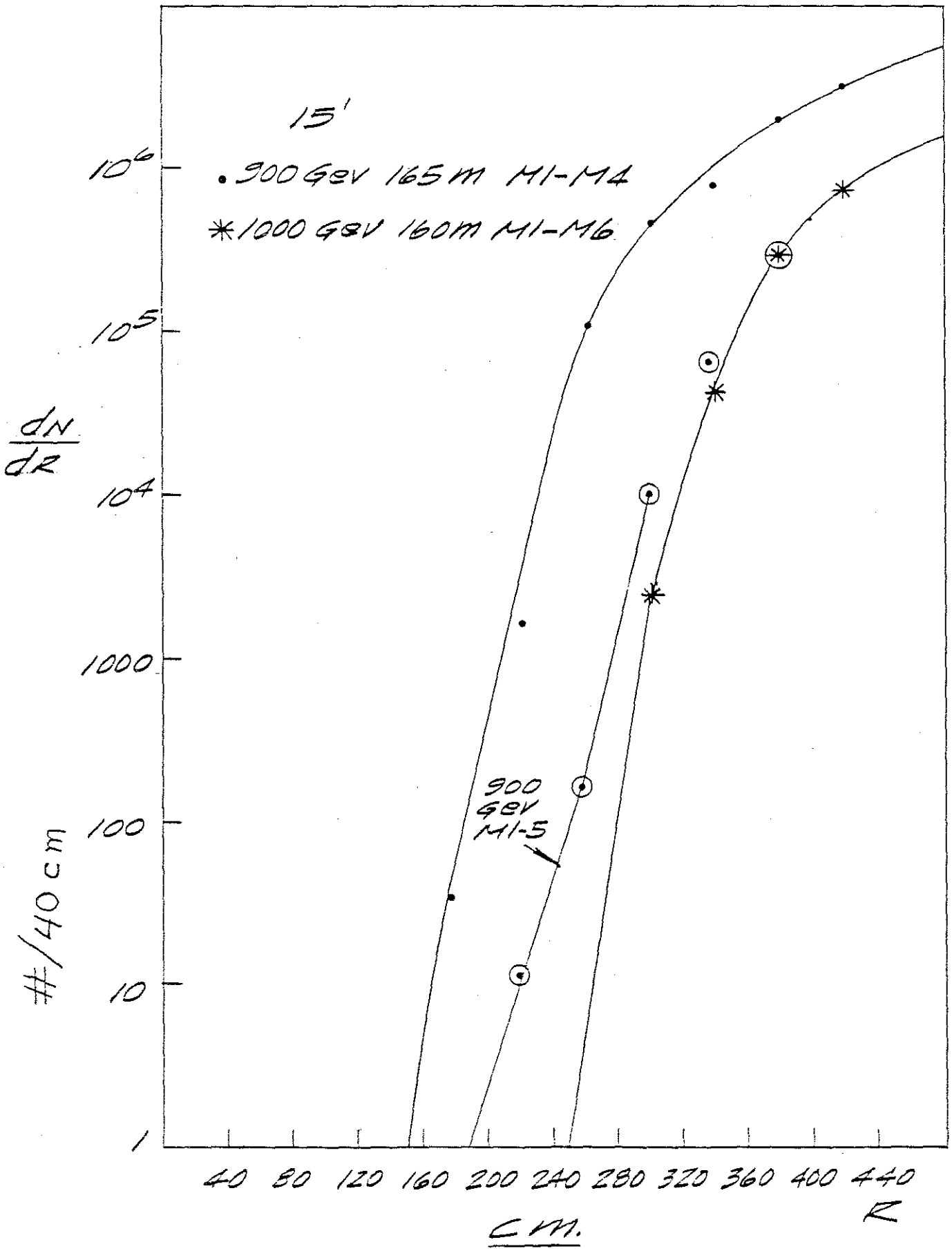
15'
• 900 GeV 165 m M1-M4
* 1000 GeV 160 m M1-M6
900 GeV M1-5
dN/dR
#/40 cm
10^6
10^5
10^4
1000
100
10
1
40 80 120 160 200 240 280 320 360 400 440
R
CM.

Fig. V-2

VI. Muon Fluxes Associated with the Proton Beam Transport

1. Beam Gas Interactions

We have examined the effects of proton beam interactions with the residual air of the vacuum system in the transport system. Pions and kaons produced in the air can decay to muons which traverse magnets and earth berm and reach the bubble chambers. The program HALO has been used to study this problem.

Proton-residual gas interactions were simulated by considering segments of 300' long to be lumped at the center of that particular segment. All dipoles and quadrupoles together with tunnel dimensions and external earth shielding were simulated in the calculation. The spatial and correlated angle and momentum distribution of muons arriving at a plane transverse to the beam at the location of the tungsten target is shown in Figure VI-1. This result is for interactions halfway between NE8 and NLA. Similar distributions for other source locations have been generated. These distributions of muons were then entered as input to the standard Monte Carlo program used for calculating muon fluxes from the tungsten dump. The output of that program gave muon fluxes in the detectors.

The results of the calculation are shown in Table VI-1. For pressures of 0.3μ upstream of NE8 and ≤0.03μ throughout NE8 and down to the target the resulting muon fluxes are tolerable.

2. Beam Collimation

It can be seen from the previous discussion that fractional beam losses of $\leq 10^{-7}$ in NE8 are acceptable and somewhat less than this downstream of NE8. Beam losses 10^{-6} have been achieved in the proton transports for E-613 in the Meson Lab and prompt neutrino experiments at CERN. Due to the fact that the bubble chambers at CERN were protected by a full 400 GeV muon range shield, they experienced no difficulties. In the present case the situation is more difficult and great care must be exercised in minimizing beam losses.

To ensure low beam losses we must collimate the beam and eliminate halo at some point upstream of NE8. We have examined two possibilities; NW4 and the downstream end of NW1. We can interact halos of $\geq 10^{9}$ protons per pulse at both NW4 and the downstream end of NW1 with acceptably low muon fluxes in the detectors.

More work remains to be done on the final choice of locations of collimators and the optimum approach to achieving the required vacuum in the transport system. However, there are no insurmountable problems in the design of an adequately clean proton transport for the Direct Neutral Lepton Facility.

Table VI-1

	VACUUM	μ BACKGROUND	
		Muons/Pulse	
	Microns Pressure	1-m	15 Foot
NW1-NW4	0.3	0.4	1.3
NW4-NE8	0.3	0.4	1.2
NE8-NLA	0.03	0.2	1.8
NLA-NLB	0.03	0.3	0.3
	TOTAL	1.3	4.6

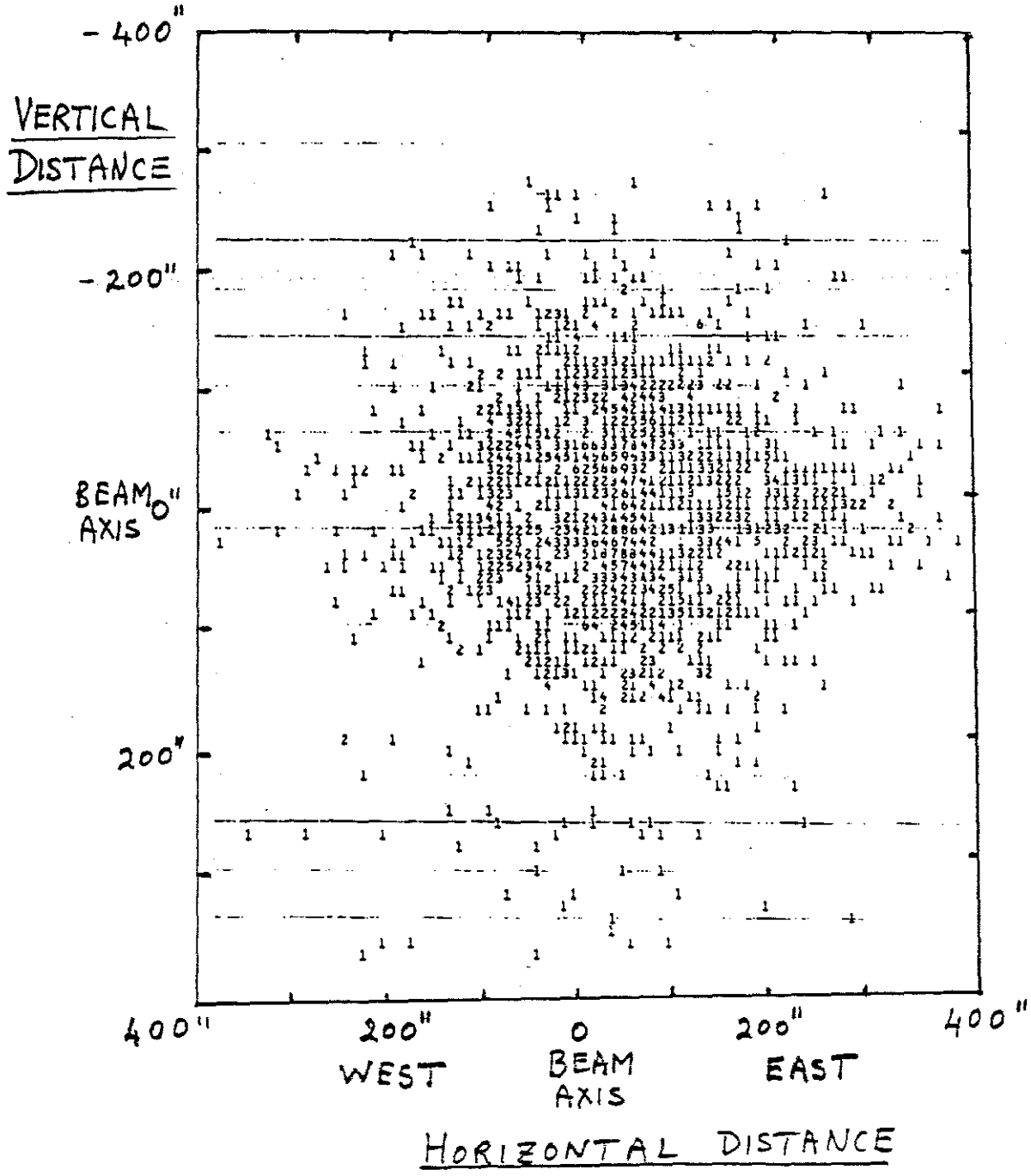

Negative muon spatial distribution in a plane transverse to the beam direction at the location of the tungsten target in NLB. The muons are produced by the interaction of 5 x 10^6 protons halfway between NE8 and NLA.

Fig. VI-1

APPENDIX D

Radiation Safety Studies

1. Introduction

There are no unusual or novel radiation safety problems in the Direct Neutral Lepton Facility. All radiation safety issues have been encountered in other beamlines which have already been operated safely. Those aspects of this Facility which have been designed for the purpose of providing adequate radiation safety are based on methods already implemented and tested in other installations.

The following items have been adequately discussed earlier in the text and will not be repeated:

1. Thermal stress cracking of the target (see Chapt. I, p. 13).
2. Muons above the Tohoku Bubble Chamber and above the roof of Lab F (see Chapt. II, p. 4).
3. Neutrino shielding and berm height over the Target Hall (see Chapt. II, p. 2).

2. Radioactive Target Handling Scheme

The removal of a radioactive target from the target shield (located in the NLB Enclosure) will be carried out as follows. This area is shown in Drawings Q-1, Q-2 and Q-3. The proposed method uses a mixture of techniques previously implemented in the Proton and Neutrino Areas.

An existing gas power mule or locomotive will be brought into the NLB Enclosure. Before moving is begun, the utilities (RAW and instrumentation) must be removed from the target shield at the target shield face. The 8" vacuum beam pipe will then be decoupled and removed to just upstream of the target. At this point, all of the utilities will be disconnected and removed.

The next step is to close remotely the 12" thick shield doors to cover the entrance of the target cavity and shield personnel from the radioactive target.

The locomotive will be connected to the re-entrant plug and will remove it to the outside railroad siding, where the plug will be stored temporarily.

A 40 ton auxiliary transfer shield (Sec. D, Dwg. Q-2) will be brought in on a transporter car and set up on hydraulic jacks at the front face of the target shield. With the guillotine door and the motorized shield doors open, the transporter car will be placed under the target. Once the transporter car is under the target bedplate, the bedplate will be raised hydraulically using jacks mounted on the transporter car. The utility duct to the spacer car will be manually connected so as to allow for removal of the target to which the duct is attached.

Now that the target is completely supported by the transporter car, it can be withdrawn and placed inside the auxiliary transfer shield (Sec. D, Dwg Q-2). The auxiliary transfer shield will be lowered hydraulically to seal the target/bedplate/transporter combination. The portion of the utility duct up to the transfer shield will be removed manually and the guillotine door at the downstream end of the transfer shield will be closed.

The entire enclosed target can now be moved to the outside. On the outside, the enclosed target can be loaded with a movable crane and riggers onto a suitable lowboy truck trailer and taken to the existing target service building (TSB).

Once at the TSB, the enclosed target will be placed with a movable crane by the riggers off of the lowboy truck trailer onto a temporary track rail system and rigged into the TSB.

At the TSB, it can be stored, repaired, or disposed of by using the existing remote handling system. Installing a new target in the beam would be the reverse of the procedure just described.

3. Radioactive M1 Magnet Coil Removal

Removal of the coils in the first spoiler (M1) magnet is a problem if they fail well into a run when residual radioactivity could be in the tens of rem/hr. The scheme for removing and replacing a coil will be as follows.

The first step will be to disconnect and manually remove the utilities at the downstream end of the magnet. Once the utilities have been disconnected, the removal of the coil may begin.

The magnet will be built in such a way as to allow the outside iron and attendant coil on either side of the magnet to be remotely rolled away from the beamline (see Drawing Q2, Section A). This allows direct crane access to the coil. Using a support fixture, the coil may be lifted remotely using a radio controlled crane. This allows for removal of a coil without personnel being in the vicinity of the radioactive coil.

The radio controlled crane will then place the coil on a special prepositioned transporter car on the railroad track system. From there it will be removed from the target area and taken to the existing Target Service Building area for repair or disposal. A fresh coil can be installed by reversing the handling techniques.

4. Earth Shielding Above Enclosures and Beam Pipes

Radiation safety requires that fenced, outdoor areas which do not have interlocked detectors be limited to a dose rate of 500 mrem/hr, under accident conditions (see Fermilab Radiation Guide, Chapt. 6.1). The accident condition in this beam which must be planned for is the dumping of 2.5×10^{13} protons/minute.

The radiation shielding program CASIM then predicts that one must have 15 feet of dirt or concrete above beamline enclosures and 17 feet above buried beam pipes. This standard has been adhered to throughout the Facility, with one exception.

In the region where the beam passes between Enclosures NE9 and NWA (at Y=106,525'; see Appendix G, Drawing C-5), there is not enough room to get this much lateral shielding. Therefore, it was proposed to put in a big enough beam pipe in this region such that it is impossible, by any amount of mistuning of magnets upstream, for the beam to hit the pipe.

The bend string in NE8, 200 feet upstream of this region, is a single series string run by one master power supply and three slaves in series. Calculations have been done which show that if the beam pipe in the NE9 region is 24 inches in diameter, then maximally misteered beam will intercept the 3-inch critical aperture at the downstream end of NE8 before it will hit the 24" pipe at the end of NE9.

In a memo dated May 2, 1985, the Research Division Chief Radiation Safety Officer, Don Cossairt, pointed out that we would still have to shield adequately against the possibility that the vacuum pipe came up to air, creating copious beam-gas interactions. In this region, there would be interlocked detectors, and the allowable radiation is 50 mrem/pulse in the fenced area and 2.5 mrem/pulse in the NWA building. What is required around the beam pipe is 6.7 feet of dirt above and to the East, and 8.2 feet to the West. The Civil Engineering drawings show 11 feet or more of dirt in all directions.

5. Residual Radioactivity in the Target and Transport Shielding

As mentioned in Chapt. I, p. 14, the target is expected to reach about 25,000 rads/hour on contact after an exposure of 10^{18} protons, before cooldown. This is inferred from a measurement of the E-613 tungsten target of 5,000 rads/hour at a distance of one foot. In a memo dated April 25, 1985, Don Cossairt analyzed the probable residual dose in the copper target actually proposed for this facility and found it only a factor of two less radioactive after a comparable run, but pointed out that the cooldown is slower for copper. Therefore we still plan to handle targets which are 5,000 rads/hour at one foot.

In a memo dated April 26, 1985, Don Cossairt recalculated the thickness of the steel shield necessary to reduce the above dose to 0.1 rads/hour and found that one needs about 11.8 inches of steel. The transporter has been designed with 12" thick walls

6. The Radioactive Cooling Water System

The target and the M1 magnet must be cooled by a closed-loop water system confined to Enclosure NLB, since this water will become radioactive. The system involves about 50 gallons of water and is a copy of systems which have operated for years in all three Experimental Areas.

The closed-loop system heat-exchanges with the low conductivity water system (LCW) in the NLB tunnel; the LCW system then heat-exchanges above-ground with the ICW system. The radioactivity of the LCW system is frequently monitored for a number of reasons, one of which is to detect any leaks from radioactive, closed-loop systems into it.

Spillage of radioactive water in the tunnel from unexpected leaks is partially contained by catch-basins which collect small leaks. In the case of a massive rupture, the system trips off, shutting the beam down. The sump pumps are then turned off so as to keep the water in the enclosure for proper clean-up. Should a procedural failure put some water in the sump system, this water is also frequently monitored for radioactivity and is contained on site. All of the above are standard procedures for target areas.

The dose rate to workers in the tunnel from the radioactive water is negligible compared to that from the target box steel (see below).

7. Residual Radiation in NLB

Because of the requirements of a very loss-free beam (see Chapt. 1, p. 13), there will be no residual radioactivity in any of the beamline tunnels. The target hall has been adequately shielded with steel to permit maintenance work with acceptably low doses to personnel after a long exposure.

The region of greatest concern is the downstream end of magnet M1 and the upstream end of M2, for this is where the services for these magnets (water and power) are connected. In a memo dated April 25, 1985, Don Cossairt calculated that the dose rate near these services would be at most 200 mrem/hour after an infinitely long run of 10^{13} protons/minute, and before any cooldown. A one-hour cooldown is required before even entering a high-intensity target area, and longer cooldowns are required before intensive repair work is allowed. Temporary lead shielding is often used to reduce doses further. The above conditions were found quite acceptable by the Research Division Safety Group.

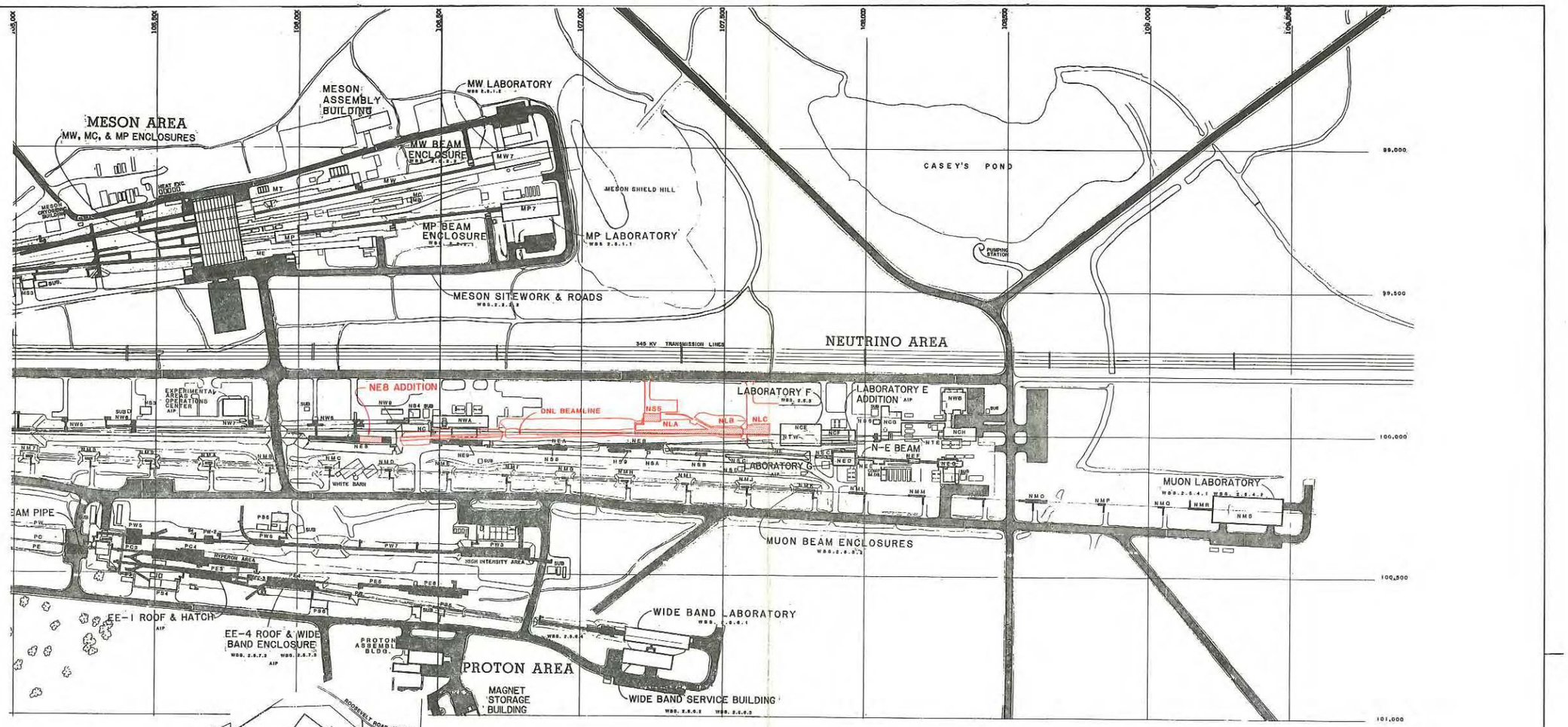

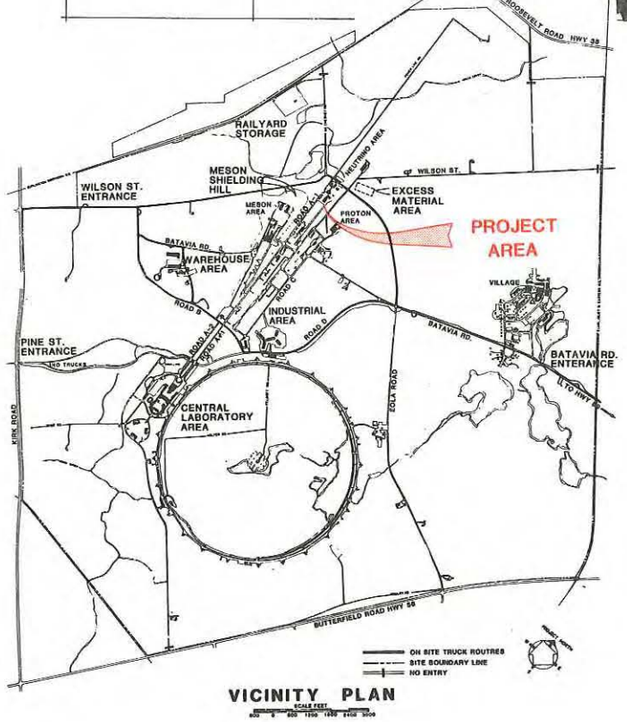

DIRECT LEPTON FACILITY

8-2-77

REV. NO.	DATE	DESCRIPTIONS
		REVISIONS
DESIGNED		
DRAWN		
CHECKED		
APPROVED		
SUBMITTED		

FERMI NATIONAL ACCELERATOR LABORATORY
UNITED STATES DEPARTMENT OF ENERGY

DIRECT LEPTON FACILITY
LOCATION AND VICINITY PLAN

DRAWING NO. 8-2-77 (CONCEPTUAL) G-1 REV.

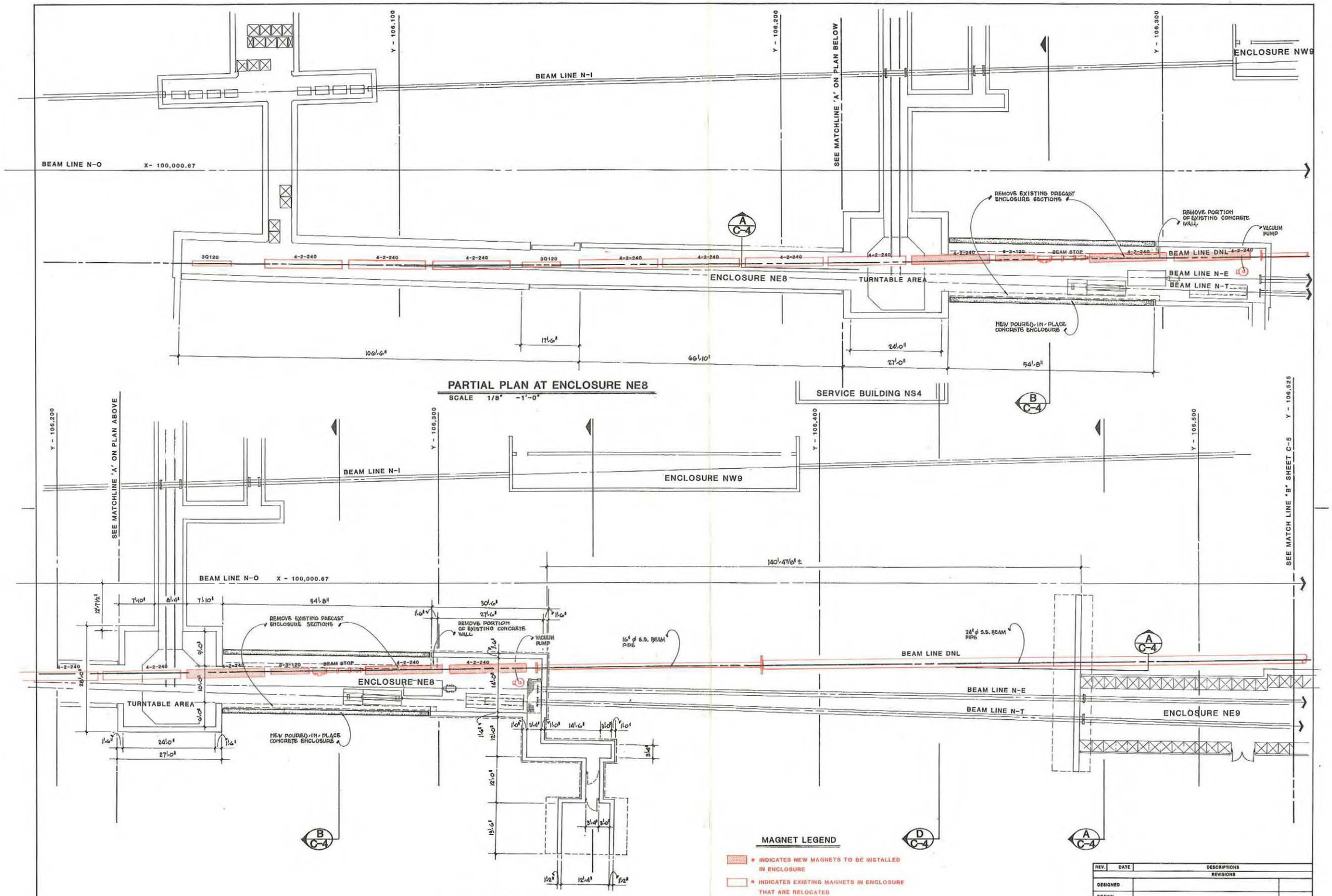

MAGNET LEGEND

- INDICATES NEW MAGNETS TO BE INSTALLED IN ENCLOSURE
- INDICATES EXISTING MAGNETS IN ENCLOSURE THAT ARE RELOCATED
- THE BEAM STOP IS A NEWLY INSTALLED COMPONENT
- INDICATES EXISTING COMPONENTS IN ENCLOSURE THAT ARE TO REMAIN AS IS

SCALES

1/8"=1'-0" SCALE 4 0 4 8 12 16 20 FEET

REV.	DATE	DESCRIPTIONS
		REVISIONS
DESIGNED		
DRAWN		
CHECKED		
APPROVED		
SUBMITTED		

FERMI NATIONAL ACCELERATOR LABORATORY

UNITED STATES DEPARTMENT OF ENERGY

DIRECT LEPTON FACILITY

ENCLOSURE NE8 PLANS

DRAWING NO. 8-2-77 (CONCEPTUAL) C-3 REV.

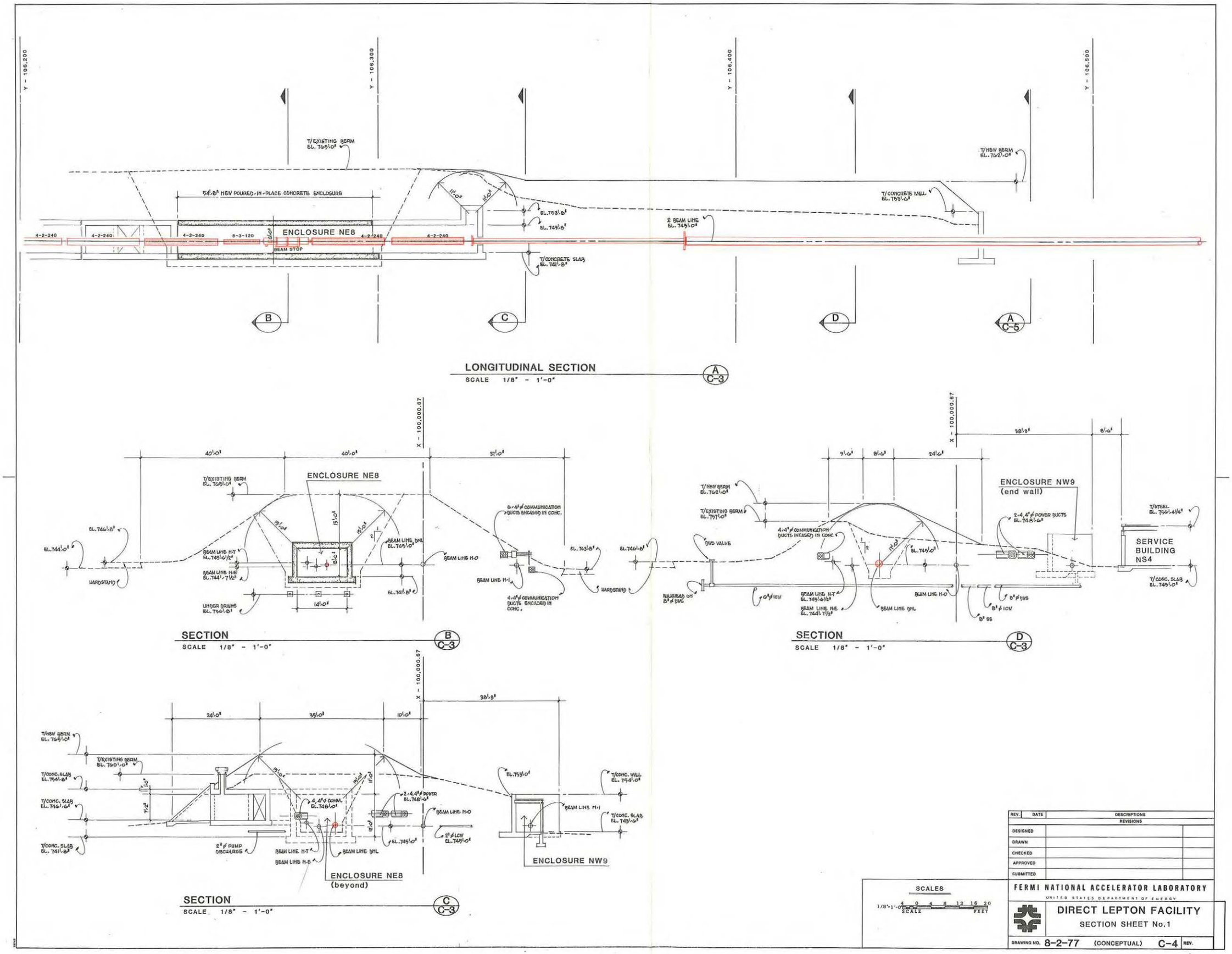

REV.	DATE	DESCRIPTIONS
		REVISIONS
DESIGNED		
DRAWN		
CHECKED		
APPROVED		
SUBMITTED		

SCALES

1/8"=1'-0" SCALE 4 0 4 8 12 16 20 FEET

FERMI NATIONAL ACCELERATOR LABORATORY

UNITED STATES DEPARTMENT OF ENERGY

DIRECT LEPTON FACILITY

SECTION SHEET No.1

DRAWING NO. 8-2-77 (CONCEPTUAL) C-4 REV.

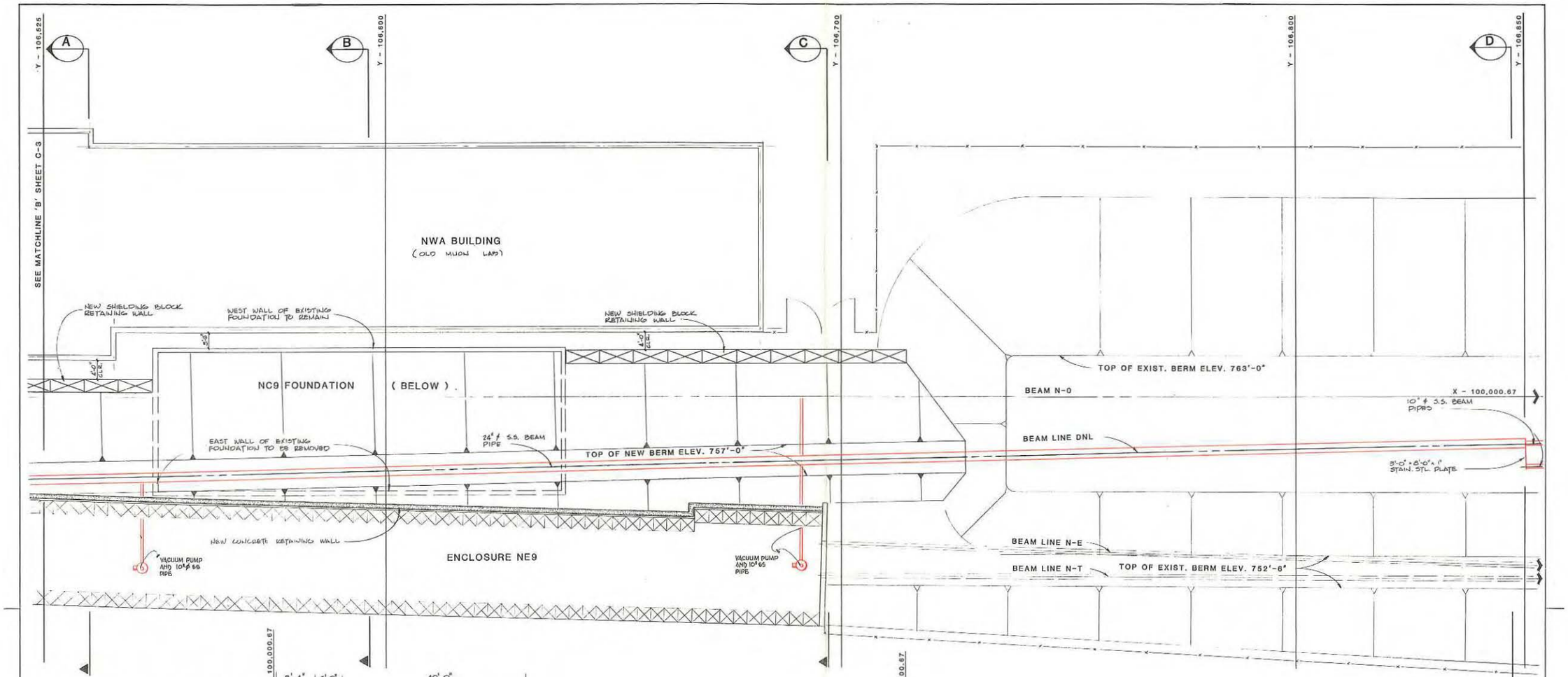

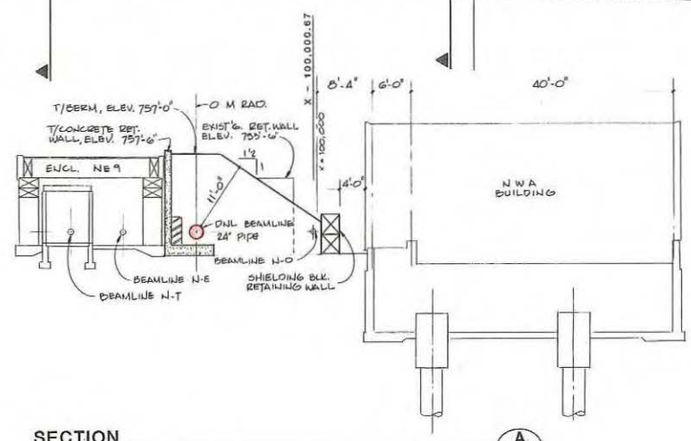

SECTION A C-3
SCALE 1/8" - 1'-0"

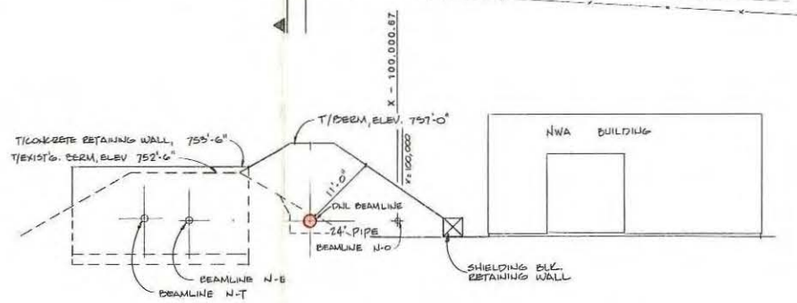

SECTION C
SCALE 1/8" - 1'-0"

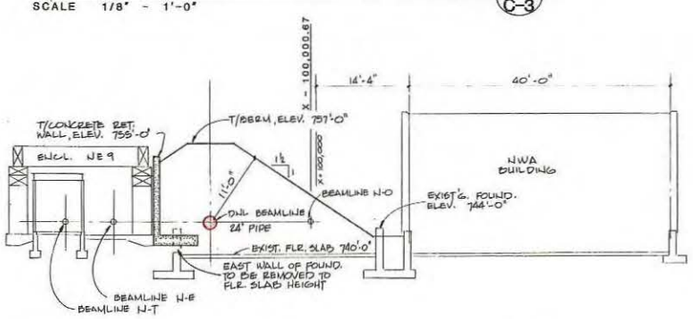

SECTION B
SCALE 1/8" - 1'-0"

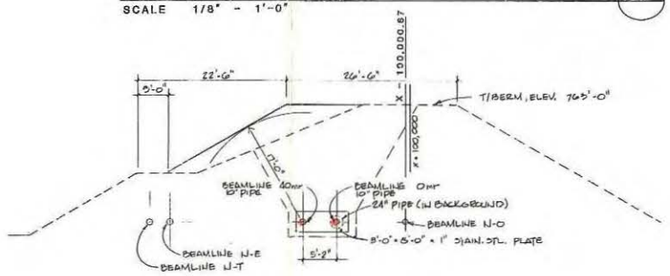

SECTION D
SCALE 1/8" - 1'-0"

SCALES
1/8"-1'-0" Scale 0 4 8 12 16 20 Feet

REV.	DATE	DESCRIPTIONS
		REVISIONS
DESIGNED		
DRAWN		
CHECKED		
APPROVED		
SUBMITTED		

FERMI NATIONAL ACCELERATOR LABORATORY
UNITED STATES DEPARTMENT OF ENERGY

DIRECT LEPTON FACILITY
OLD MUON LAB AREA
PLAN AND SECTIONS

DRAWING NO. 8-2-77 (CONCEPTUAL) C-5 REV.

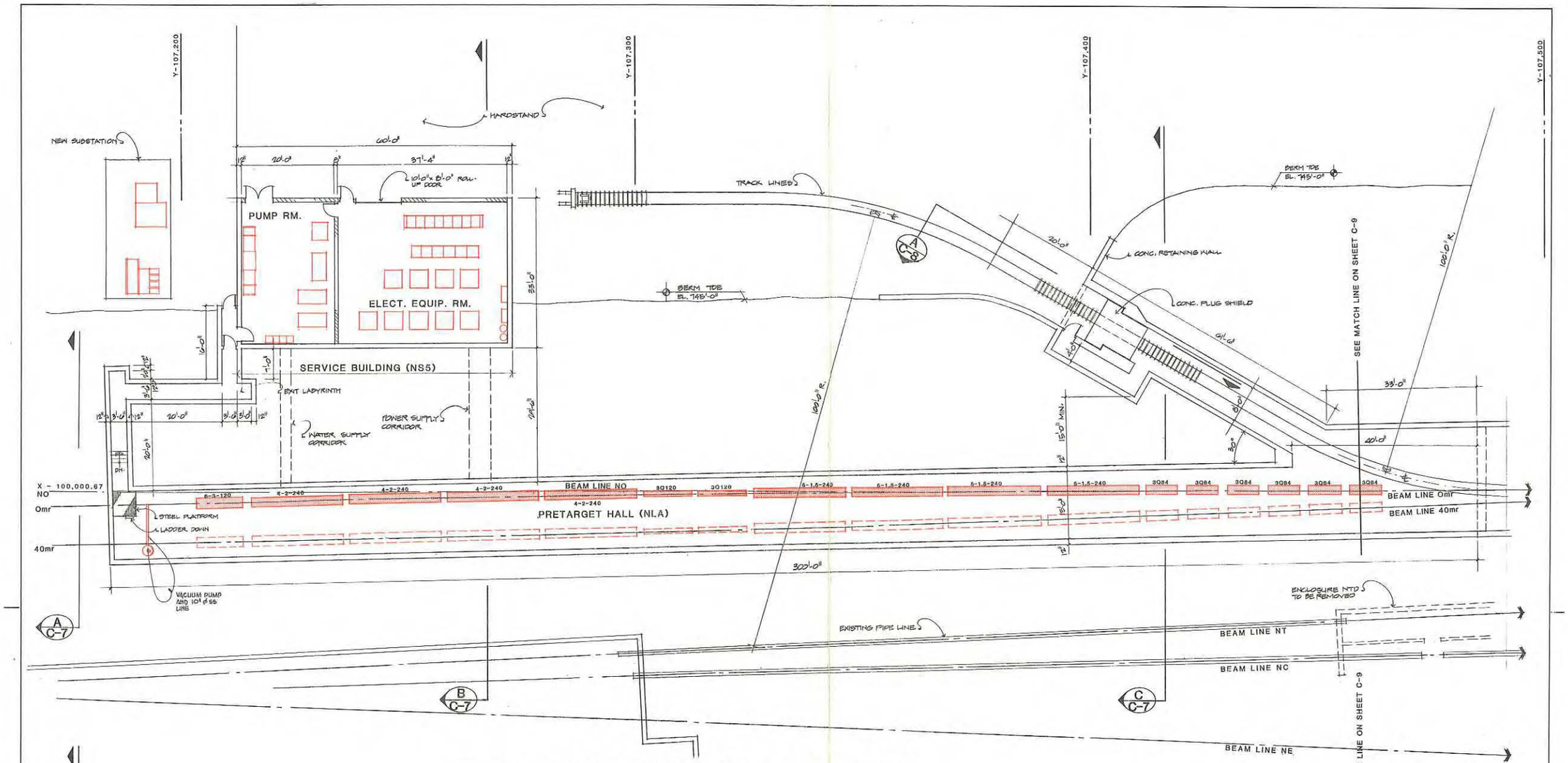

PRETARGET HALL (NLA) & SERVICE BUILDING (NS5) FLOOR PLANS

SCALE 1/8" - 1'-0"

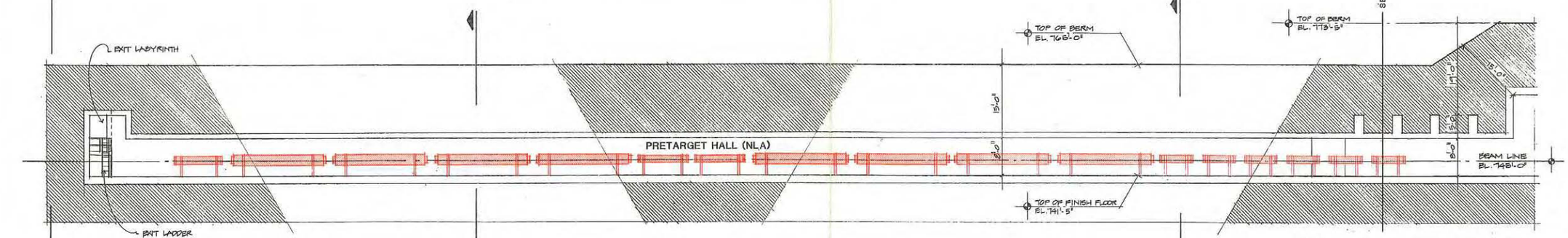

SECTION

SCALE 1/8" - 1'-0"

REV.	DATE	DESCRIPTIONS
		REVISIONS
DESIGNED		
DRAWN		
CHECKED		
APPROVED		
SUBMITTED		

SCALES

1/8"=1'-0" SCALE 4 0 4 8 12 16 20 FEET

FERMI NATIONAL ACCELERATOR LABORATORY

UNITED STATES DEPARTMENT OF ENERGY

DIRECT LEPTON FACILITY

PRETARGET HALL PLAN AND SECTION

DRAWING NO. 8-2-77 (CONCEPTUAL) C-6 REV.

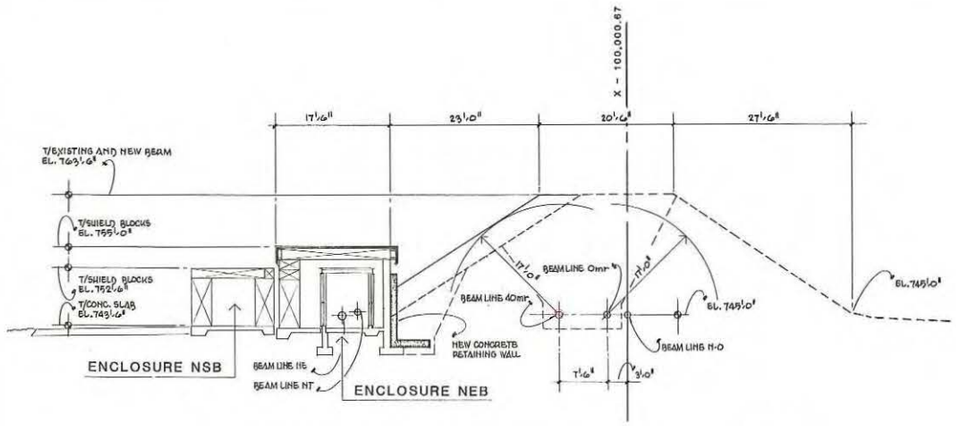

SECTION A C-6

SCALE 1/8" - 1'-0"

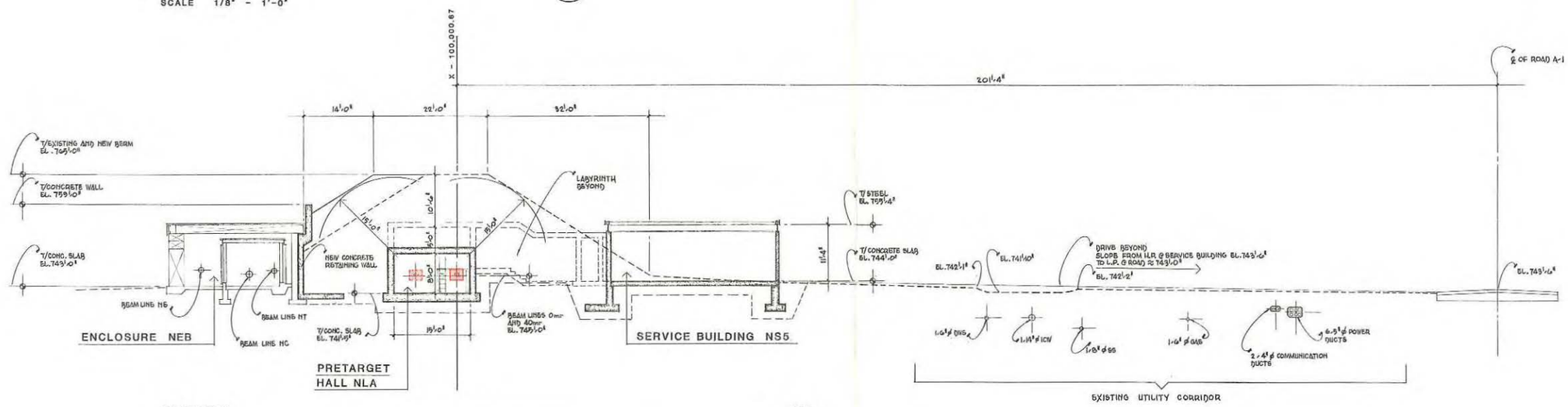

SECTION B C-6

SCALE 1/8" - 1'-0"

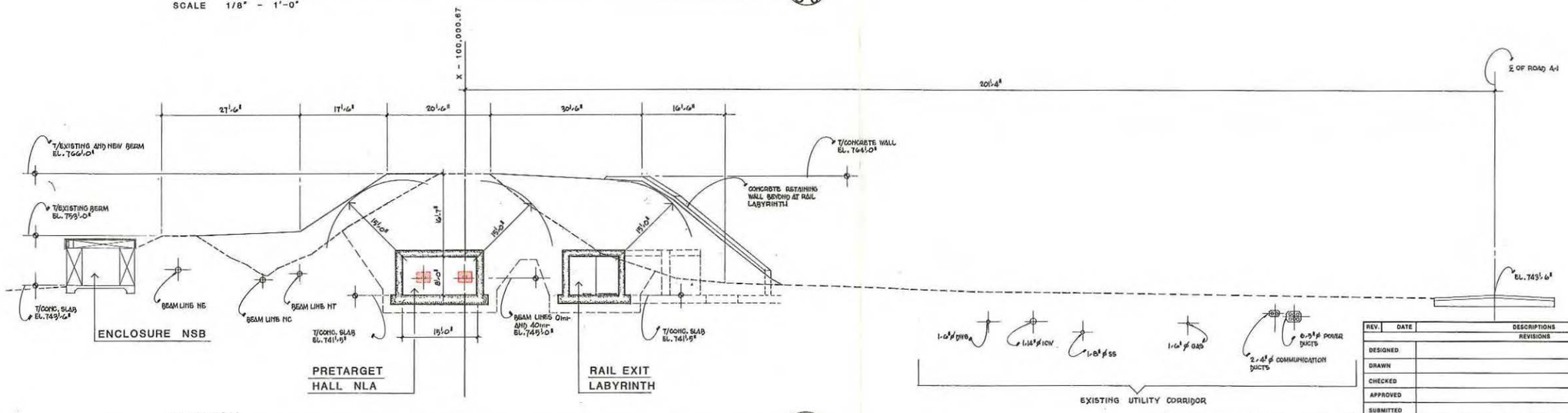

SECTION C C-6

SCALE 1/8" - 1'-0"

SCALES

1/8"=1'-0" Scale 4 0 4 8 12 16 20 Feet

REV.	DATE	DESCRIPTIONS
		REVISIONS
DESIGNED		
DRAWN		
CHECKED		
APPROVED		
SUBMITTED		

FERMI NATIONAL ACCELERATOR LABORATORY

UNITED STATES DEPARTMENT OF ENERGY

DIRECT LEPTON FACILITY

SECTION SHEET No. 2

DRAWING NO. 8-2-77 (CONCEPTUAL) C-7 REV.

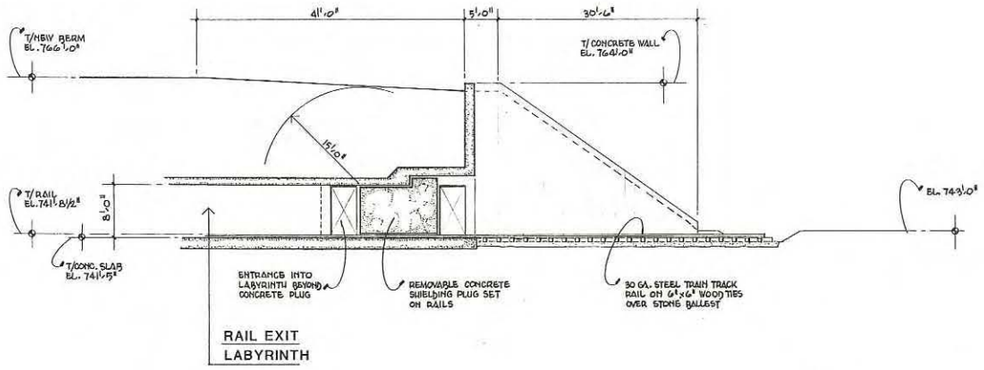

SECTION

SCALE 1/8" - 1'-0"

A
C-6

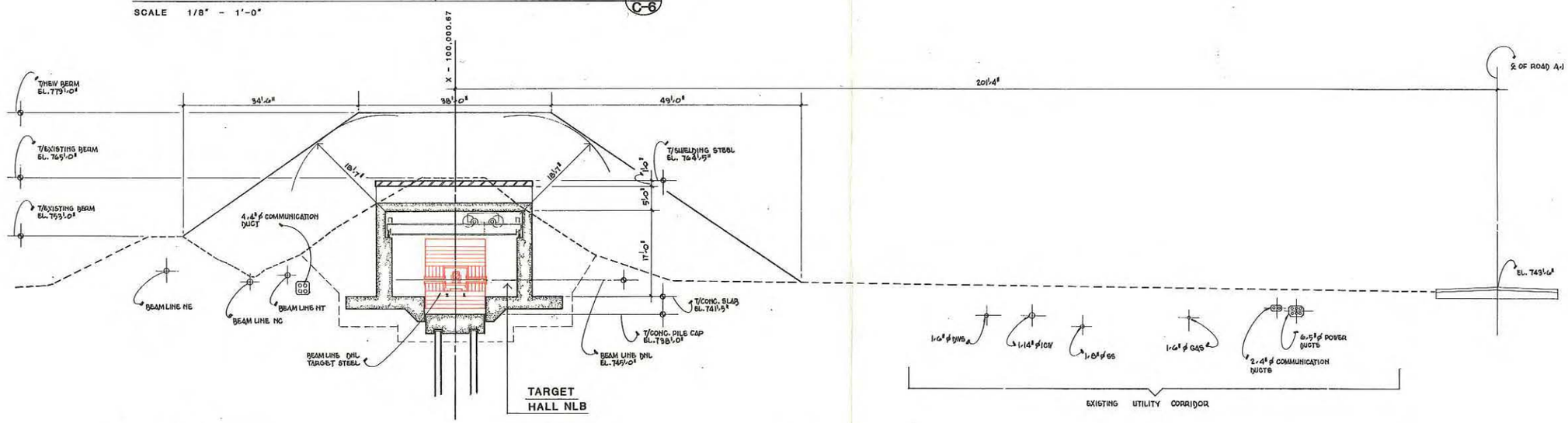

SECTION

SCALE 1/8" - 1'-0"

B
C-9

REV.	DATE	DESCRIPTIONS
		REVISIONS
DESIGNED		
DRAWN		
CHECKED		
APPROVED		
SUBMITTED		

SCALES

1/8" = 1'-0" Scale — 4 0 4 8 12 16 20 Feet

FERMI NATIONAL ACCELERATOR LABORATORY

UNITED STATES DEPARTMENT OF ENERGY

DIRECT LEPTON FACILITY

SECTION SHEET No.3

DRAWING NO. 8-2-77 (CONCEPTUAL) C-8 REV.

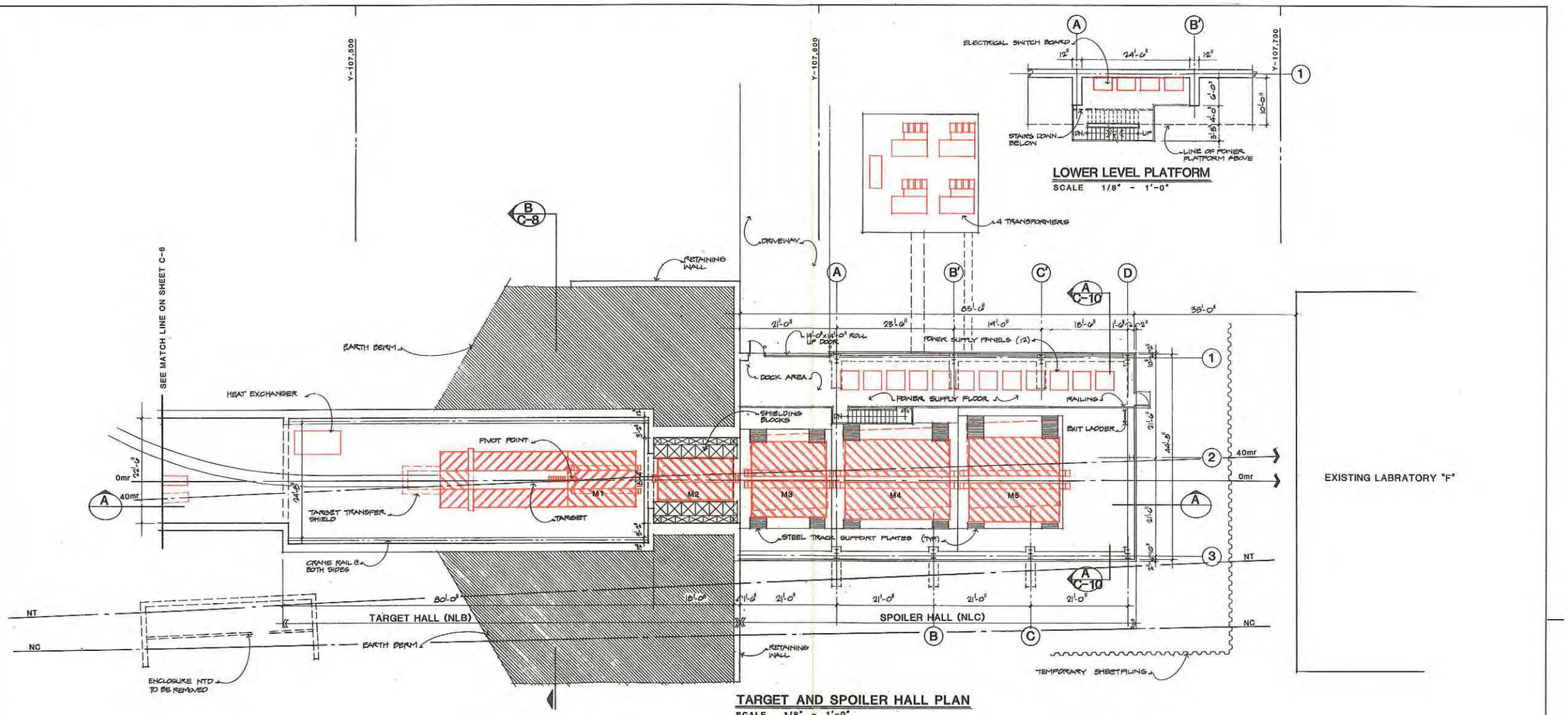

REV.	DATE	DESCRIPTIONS
		REVISIONS
DESIGNED		
DRAWN		
CHECKED		
APPROVED		
SUBMITTED		

FERMI NATIONAL ACCELERATOR LABORATORY
UNITED STATES DEPARTMENT OF ENERGY

DIRECT LEPTON FACILITY

TARGET AND SPOILER HALL PLANS AND SECTION

DRAWING NO. 8-2-77 (CONCEPTUAL) C-9 REV.

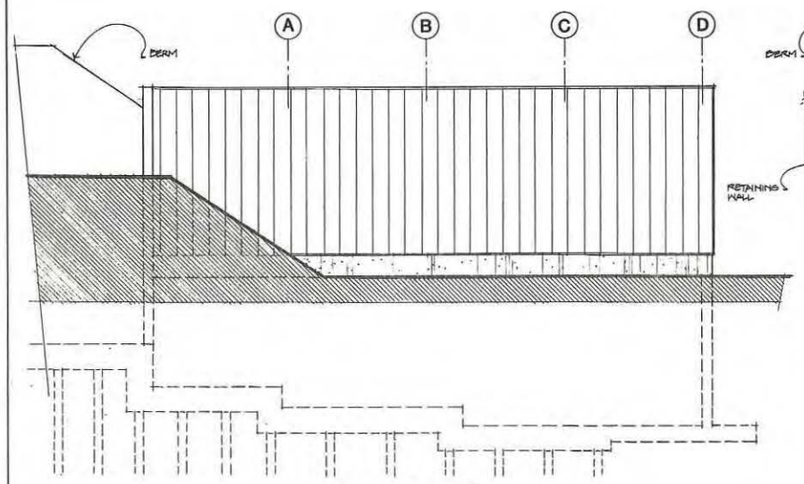

EAST ELEVATION
SCALE 1/8" - 1'-0"

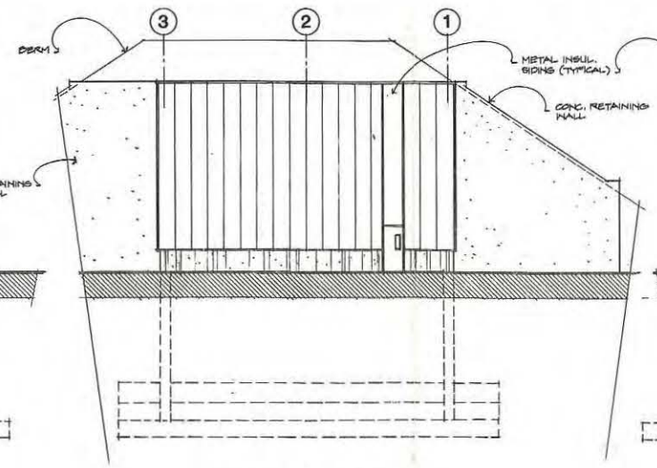

NORTH ELEVATION
SCALE 1/8" - 1'-0"

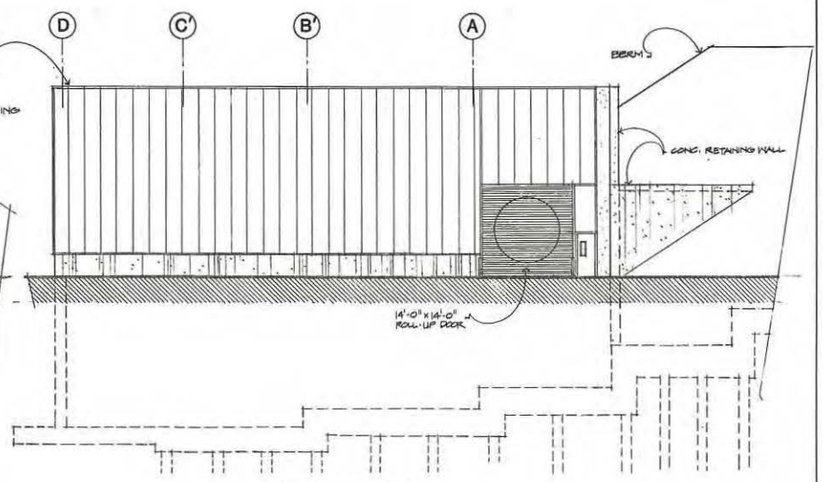

WEST ELEVATION
SCALE 1/8" - 1'-0"

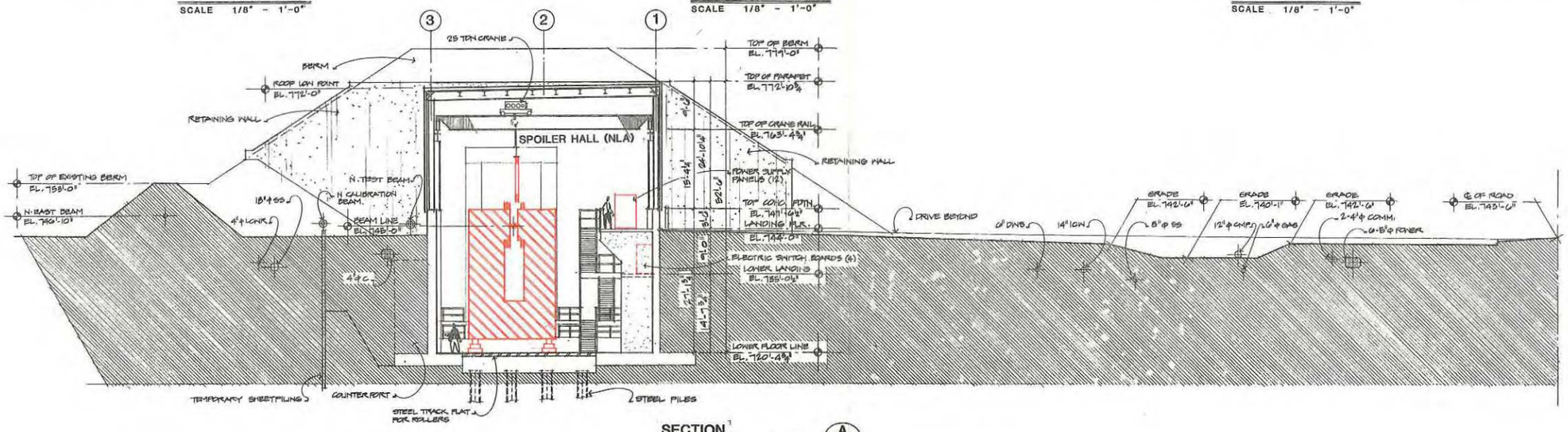

SECTION A/C-9
SCALE 1/8" - 1'-0"

SPOILER HALL ELEVATIONS & SECTION

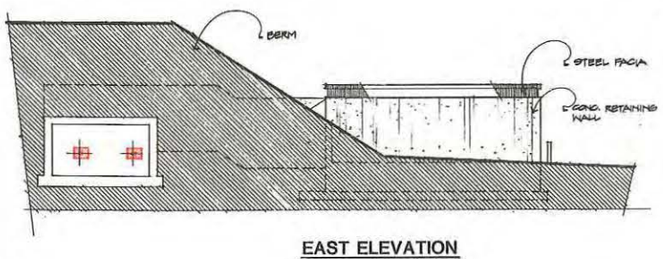

EAST ELEVATION
SCALE 1/8" - 1'-0"

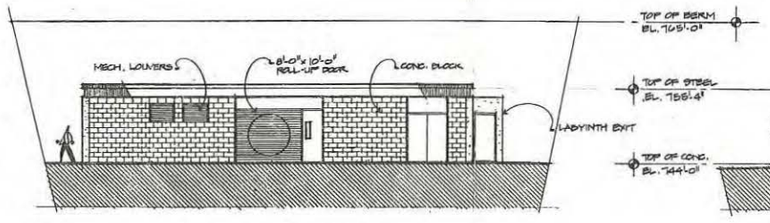

NORTH ELEVATION
SCALE 1/8" - 1'-0"

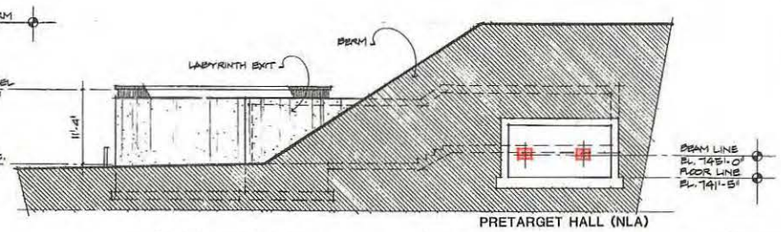

PRETARGET HALL (NLA)

WEST ELEVATION
SCALE 1/8" - 1'-0"

SERVICE BUILDING ELEVATIONS

REV.	DATE	DESCRIPTIONS
		REVISIONS
DESIGNED		
DRAWN		
CHECKED		
APPROVED		
SUBMITTED		

SCALE
1/8"=1'-0" 4 0 4 8 12 16 20
SCALE FEET

FERMI NATIONAL ACCELERATOR LABORATORY
UNITED STATES DEPARTMENT OF ENERGY

DIRECT LEPTON FACILITY
TARGET HALL
AND SERVICE BUILDING ELEVATIONS

DRAWING NO. 8-2-77 (CONCEPTUAL) C-10 REV.

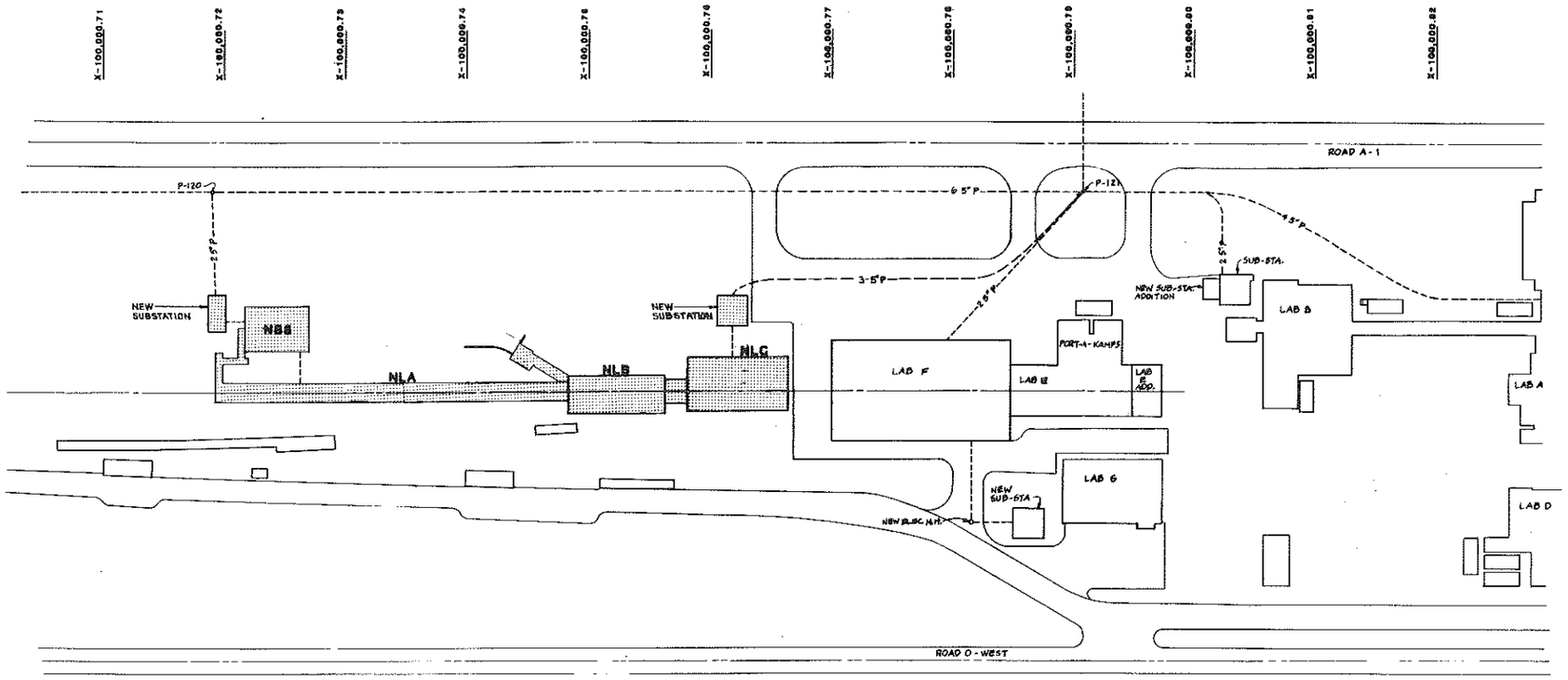

13.8 KV & 480 V POWER DISTRIBUTION PLAN
SCALE: 1'-0" : 40'-0"

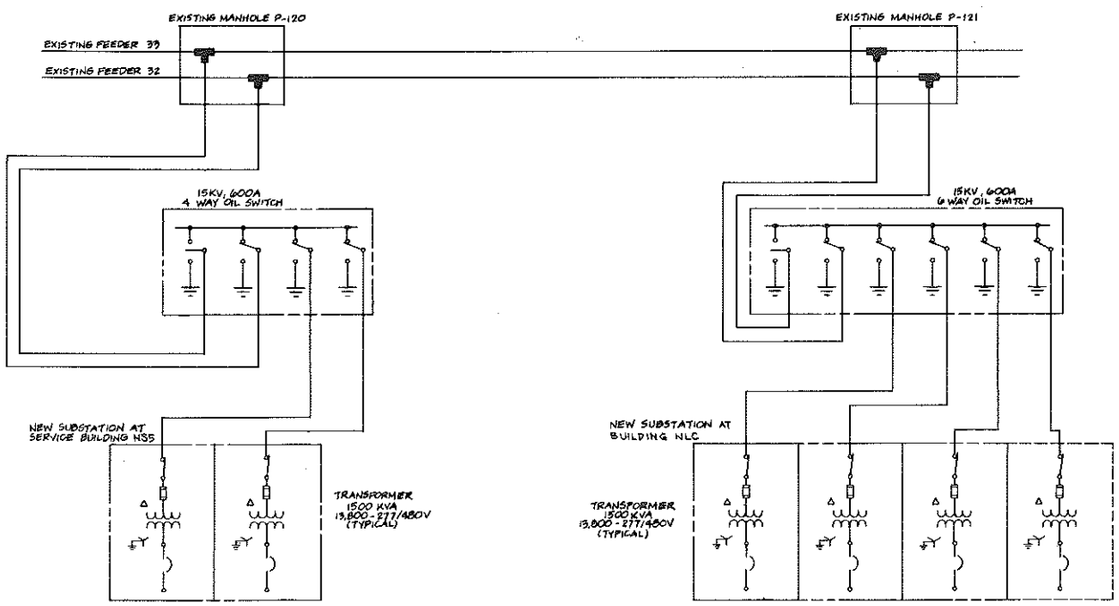

ONE LINE DIAGRAM
NO SCALE

REV.	DATE	DESCRIPTIONS
		REVISIONS
DESIGNED		PETER M. SOTO
DRAWN		KARL WHITTEN
CHECKED		
APPROVED		
SUBMITTED		

FERMI NATIONAL ACCELERATOR LABORATORY
UNITED STATES DEPARTMENT OF ENERGY

DIRECT LEPTON FACILITY
SITE POWER DISTRIBUTION PLAN

DRAWING NO. 8-2-77 (CONCEPTUAL) E-1 REV.

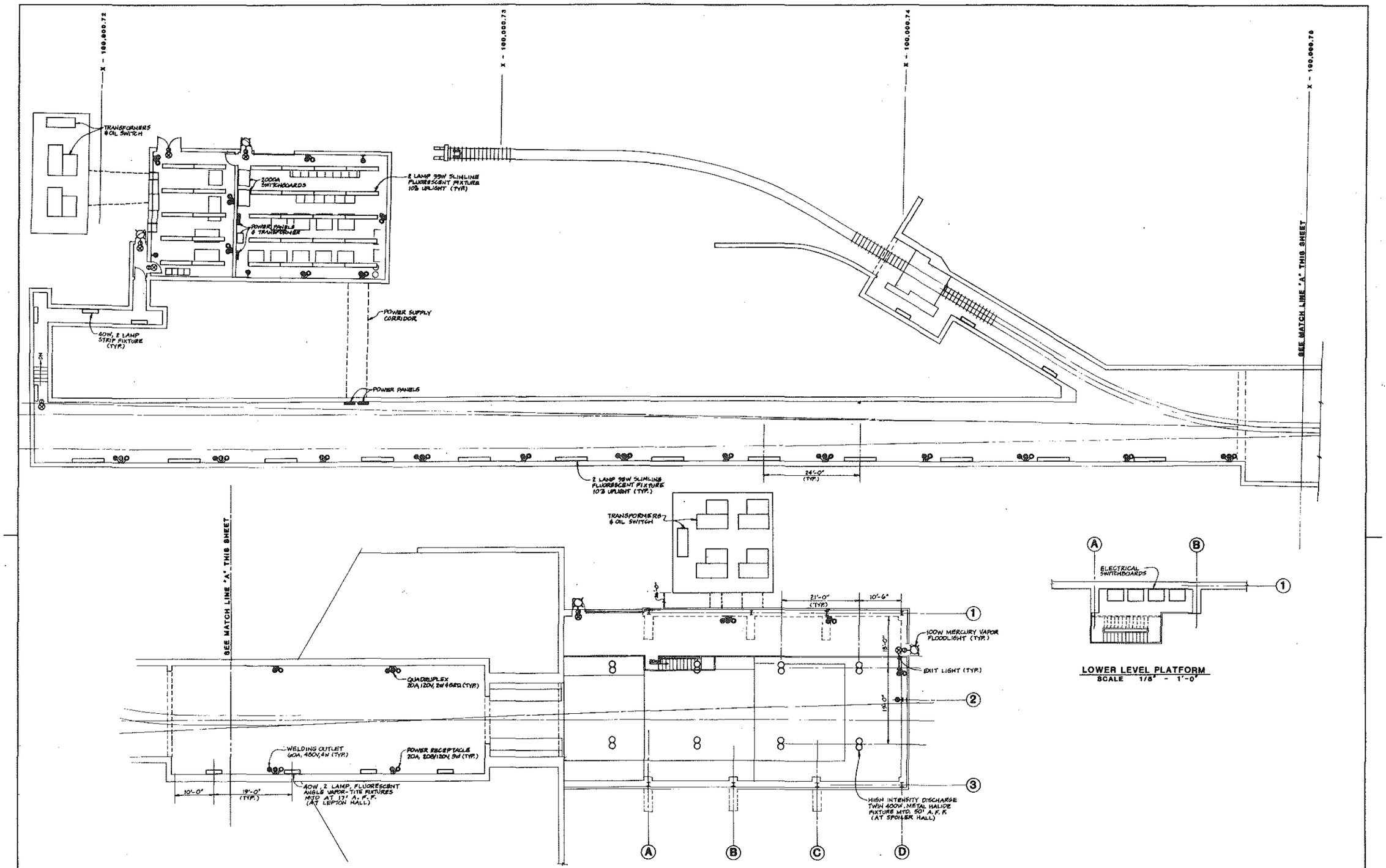

POWER AND LIGHTING PLAN
SCALE 1/8" - 1'-0"

LOWER LEVEL PLATFORM
SCALE 1/8" - 1'-0"

REV.	DATE	DESCRIPTIONS
		REVISIONS
DESIGNED		
DRAWN	KARL WHITTEN	
CHECKED		
APPROVED		
SUBMITTED		

SCALES

1/8"-1'-0" 4 0 4 8 12 16 20 Scale Feet

FERMI NATIONAL ACCELERATOR LABORATORY
UNITED STATES DEPARTMENT OF ENERGY

DIRECT LEPTON FACILITY

ELECTRICAL POWER AND LIGHTING PLAN

DRAWING NO. 8-2-77 (CONCEPTUAL) E-2 REV.

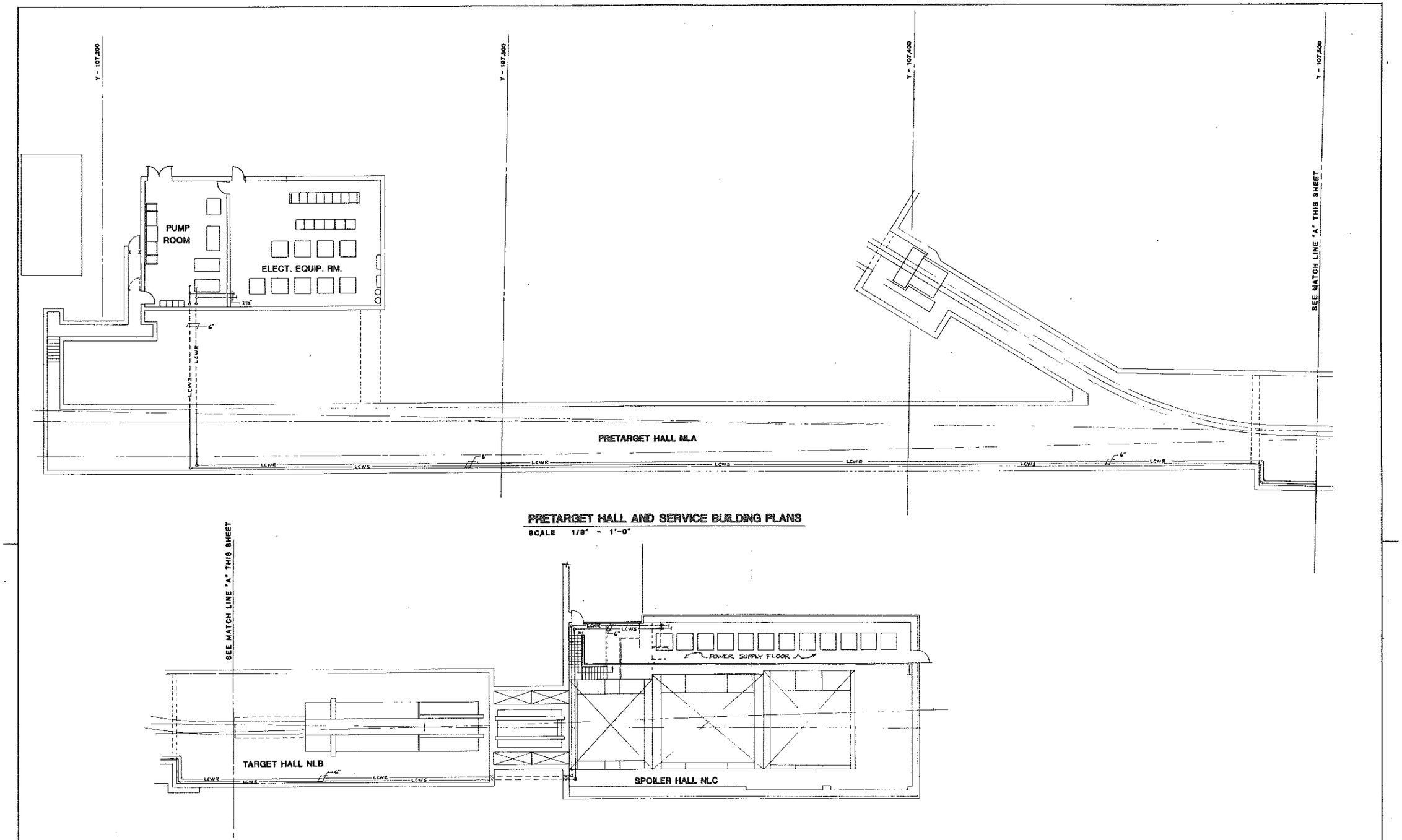

PRETARGET HALL AND SERVICE BUILDING PLANS

SCALE 1/8" - 1'-0"

TARGET AND SPOILER HALLS PLAN

SCALE 1/8" - 1'-0"

REV.	DATE	DESCRIPTIONS
		REVISIONS
DESIGNED		
DRAWN		
CHECKED		
APPROVED		
SUBMITTED		

SCALES

1/8"=1'-0" 4 0 4 8 12 16 20 Scale Feet

FERMI NATIONAL ACCELERATOR LABORATORY

UNITED STATES DEPARTMENT OF ENERGY

DIRECT LEPTON FACILITY

WATER DISTRIBUTION PLAN

DRAWING NO. 8-2-77 (CONCEPTUAL) M-1 REV.

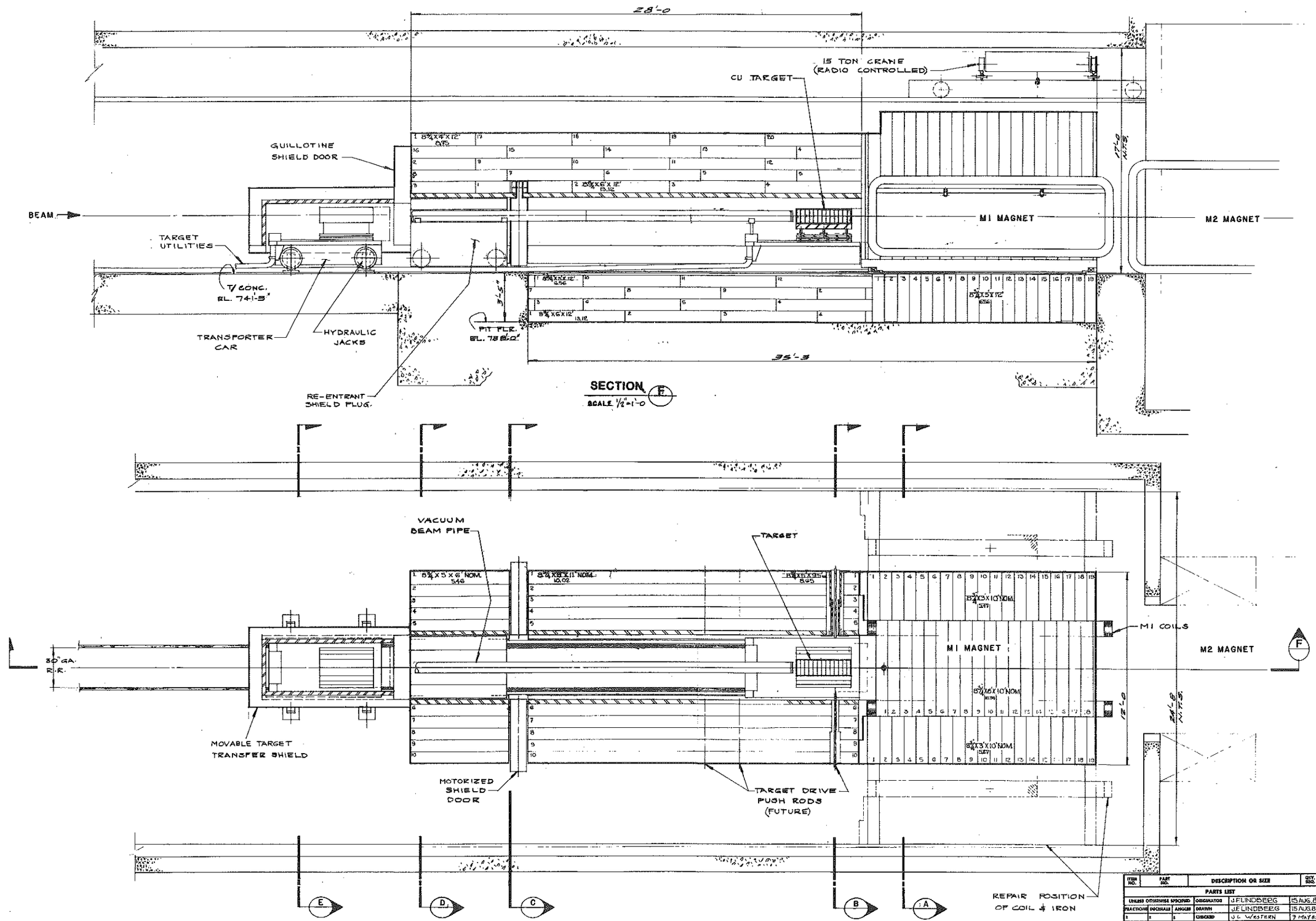

PLAN

SCALE 1/2"=1'-0

ITEM NO.	PART NO.	DESCRIPTION OR SIZE	QTY. REQ.
		PARTS LIST	

UNLESS OTHERWISE SPECIFIED	ORIGINATOR	J.F. LINDBERG	15 AUG. 82
FRACTIONS DECIMALS ANGLES	DRAWN	J.F. LINDBERG	15 AUG. 82
± ± ±	CHECKED	J.L. WESTERN	9 MAY 85
1. BREAK ALL SHARP EDGES 1/64 MAX.	APPROVED		
2. DO NOT SCALE DWG.	USED ON		
3. DIMENSIONING IN ACCORD WITH ANSI Y14.5 STD.	MATERIAL-		
MAX. ALL MACHINED SURFACES			

FERMI NATIONAL ACCELERATOR LABORATORY
UNITED STATES DEPARTMENT OF ENERGY

DIRECT LEPTON FACILITY
TARGET SHIELD PLAN

SCALE	PROJ.	DRAWING NUMBER	REV
		8-2-77 (CONCEPTUAL) Q-1	

REV.	DESCRIPTION	DRAWN	DATE
		APPD.	DATE

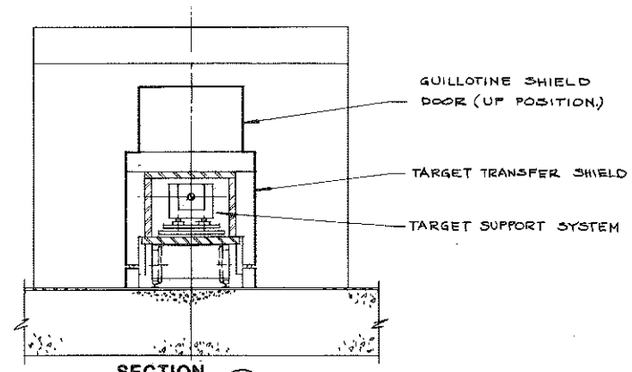

SECTION E
SCALE 1/2"=1'-0

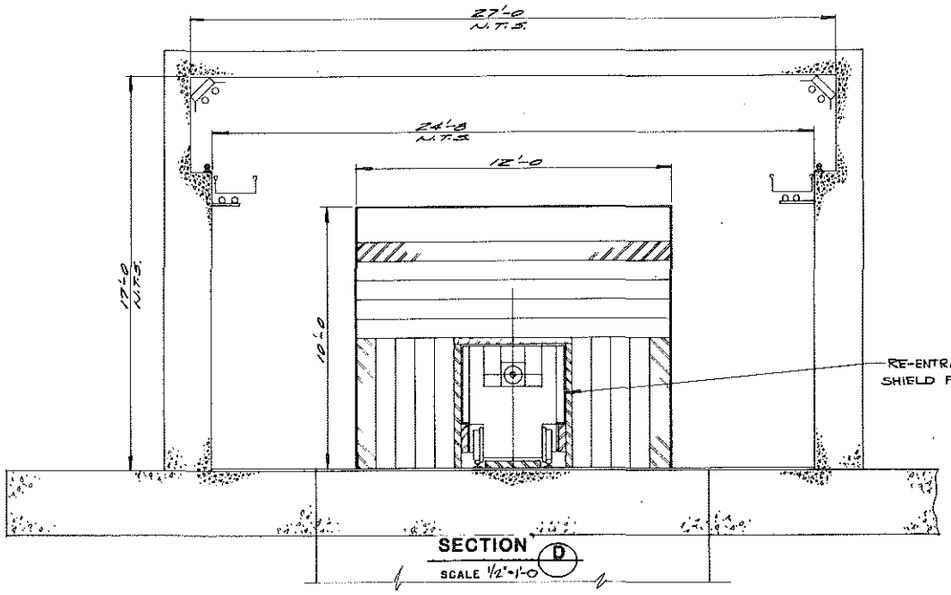

SECTION D
SCALE 1/2"=1'-0

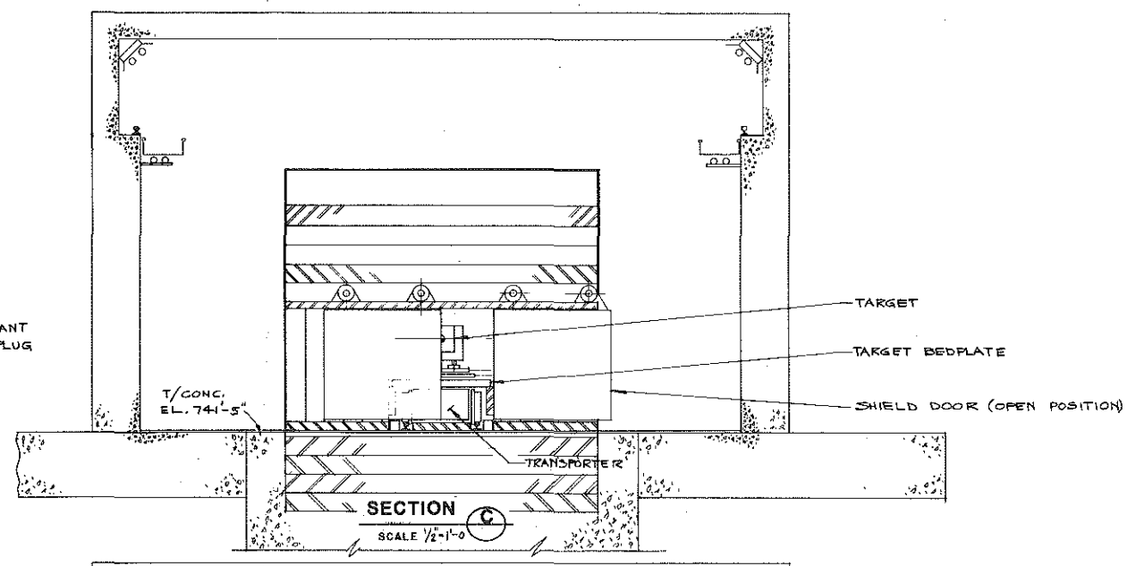

SECTION C
SCALE 1/2"=1'-0

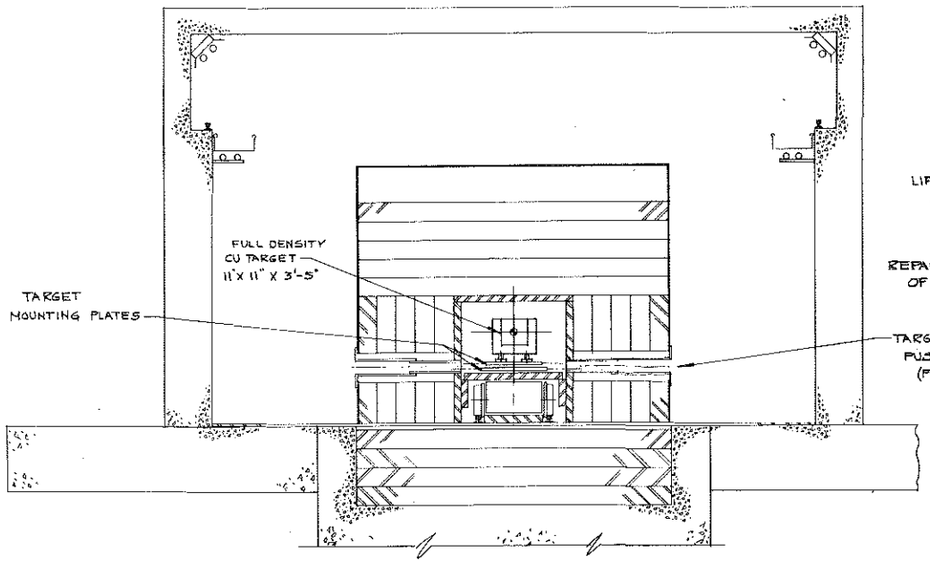

SECTION B
SCALE 1/2"=1'-0

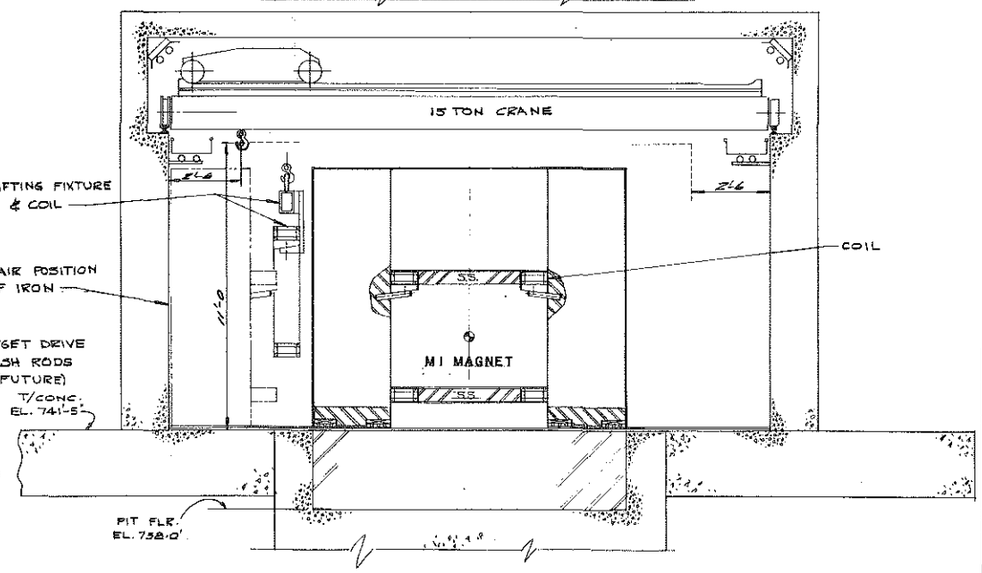

SECTION A
SCALE 1/2"=1'-0

ITEM NO.	PART NO.	DESCRIPTION OR SIZE	QTY. REQ.
		PARTS LIST	

UNLESS OTHERWISE SPECIFIED	ORIGINATOR	J.F. LINDBERG	15 AUG. 82
FRACTIONS / DECIMALS / ANGLES	DRAWN	J.E. LINDBERG	15 AUG. 82
± / ± / ±	CHECKED	J.L. WESTON	2 MAY 85
1. BREAK ALL SHARP EDGES 1/64 MAX. 2. DO NOT SCALE DWG. 3. DIMENSIONING IN ACCORD WITH ASME Y14.5 STD'S.	APPROVED		
MAX. ALL MACHINED SURFACES	USED ON		
	MATERIAL-		

FERMI NATIONAL ACCELERATOR LABORATORY
UNITED STATES DEPARTMENT OF ENERGY

DIRECT LEPTON FACILITY
TARGET SHIELD SECTIONS

SCALE	FILMED	DRAWING NUMBER	REV.
		8-2-77(CONCEPTUAL) Q-2	

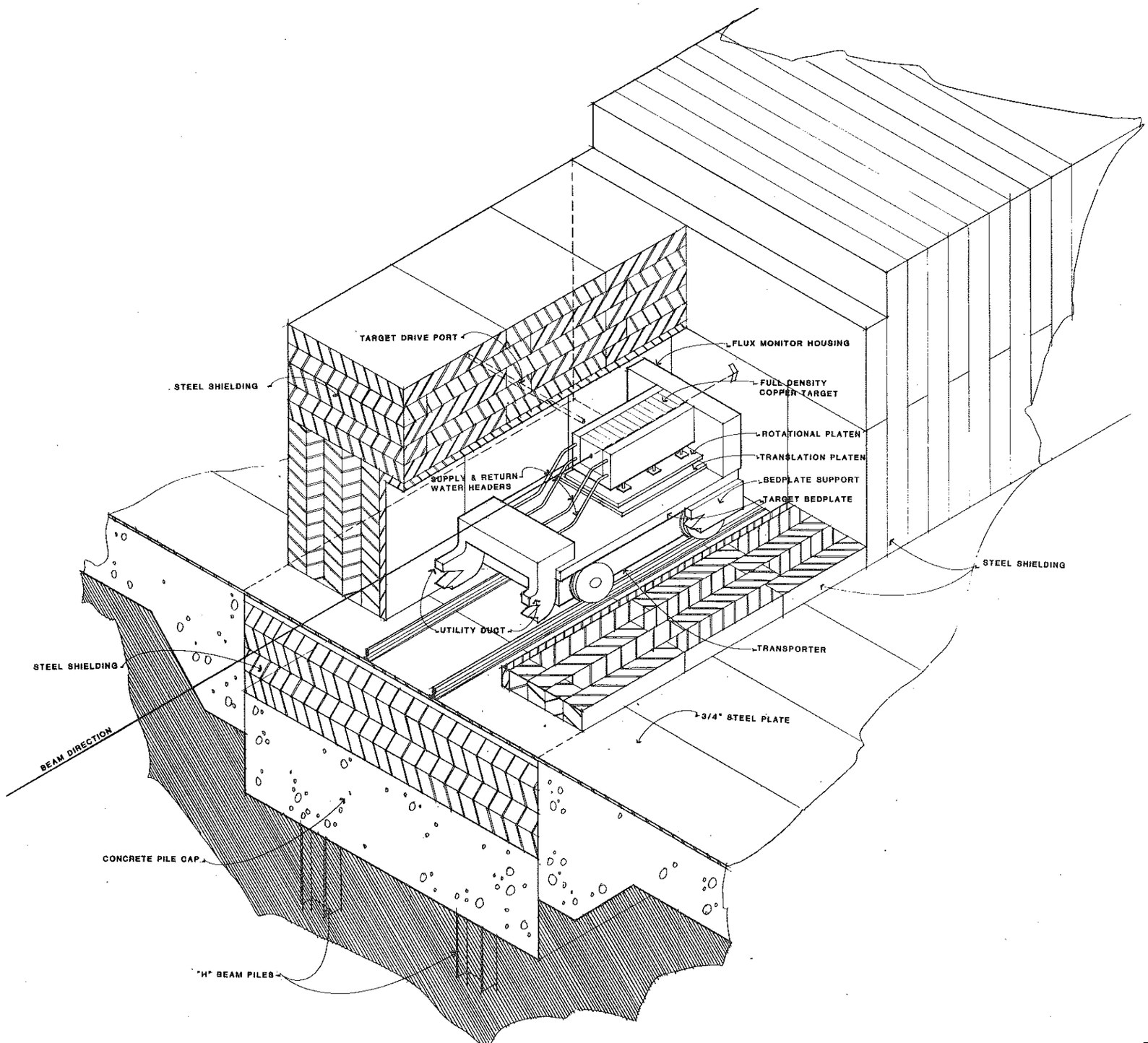

REV.	DATE	DESCRIPTIONS
		REVISIONS
DESIGNED		
DRAWN		
CHECKED		
APPROVED		
SUBMITTED		

FERMI NATIONAL ACCELERATOR LABORATORY

UNITED STATES DEPARTMENT OF ENERGY

DIRECT LEPTON FACILITY

TARGET TRANSPORT DRAWING

DRAWING NO. 8-2-77 (CONCEPTUAL) Q-3 REV.

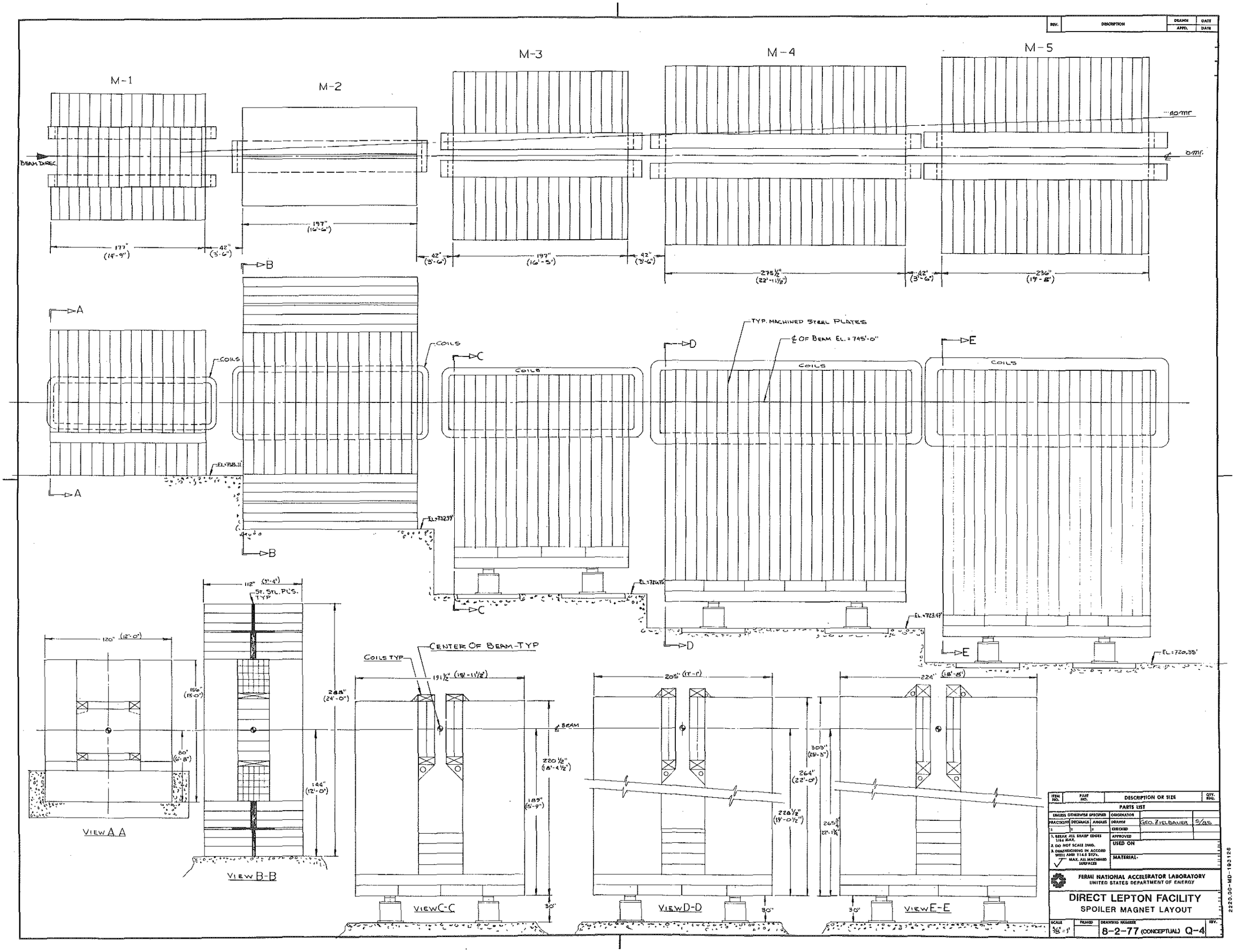
M-1
M-2
M-3
M-4
M-5
BEAM DIREC.
10 mr
0 mr
177" (14'-9")
42" (3'-6")
197" (16'-5")
275½" (22'-11½")
236" (19'-8")
A
B
C
D
E
COILS
TYP. MACHINED STEEL PLATES
℄ OF BEAM EL. = 745'-0"
EL. = 728.11'
EL. = 723.59'
EL. = 722.75'
EL. = 723.47'
EL. = 720.35'
112" (9'-4")
ST. STL. PLS. TYP
120" (12'-0")
156" (13'-0")
80" (6'-8")
288" (24'-0")
144" (12'-0")
VIEW A A
VIEW B-B
CENTER OF BEAM-TYP
COILS TYP
191½" (15'-11½")
BEAM
220½" (18'-4½")
189" (15'-9")
30"
VIEW C-C
205" (17'-1")
264" (22'-0")
228½" (19'-0½")
VIEW D-D
224" (18'-8")
303" (25'-3")
265" (22'-1¼")
VIEW E-E
REV. | DESCRIPTION | DRAWN | DATE | APPD. | DATE
ITEM NO. | PART NO. | DESCRIPTION OR SIZE | QTY. REQ.
PARTS LIST
UNLESS OTHERWISE SPECIFIED
FRACTIONS | DECIMALS | ANGLES
1. BREAK ALL SHARP EDGES 1/64 MAX.
2. DO NOT SCALE DWG.
3. DIMENSIONING IN ACCORD WITH ASM Y14.5 STD'L.
MAX. ALL MACHINED SURFACES
ORIGINATOR
DRAWN GEO. ZIELBAUER 5/85
CHECKED
APPROVED
USED ON
MATERIAL
FERMI NATIONAL ACCELERATOR LABORATORY
UNITED STATES DEPARTMENT OF ENERGY
DIRECT LEPTON FACILITY
SPOILER MAGNET LAYOUT
SCALE 3/8" = 1'
FILMED
DRAWING NUMBER 8-2-77 (CONCEPTUAL) Q-4
REV.
2220.00-MD-193126

REV.	DESCRIPTION	DRAWN	DATE
		APPD.	DATE

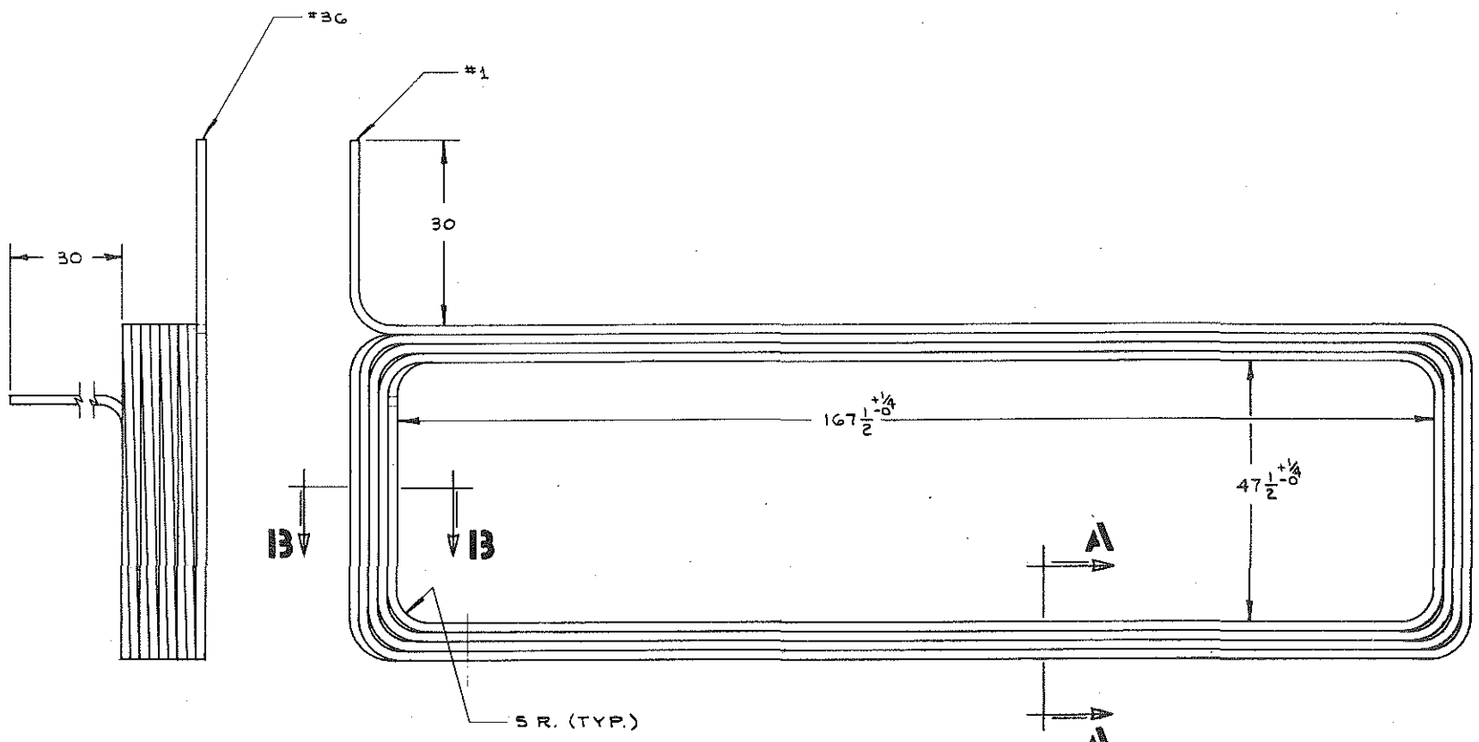

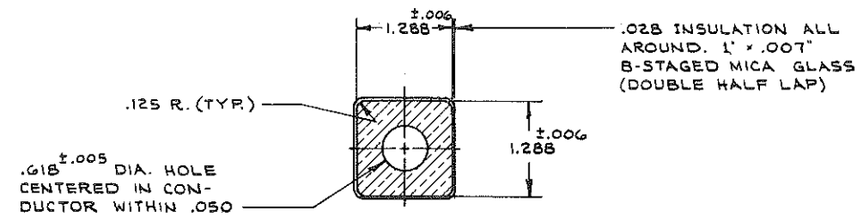

CONDUCTOR CROSS SECTION

SCALE: FULL

NOTES:
1. AFTER INSULATING, COIL ASSEMBLY SHALL BE IMPREGNATED WITH CAST EPOXY RESIN.

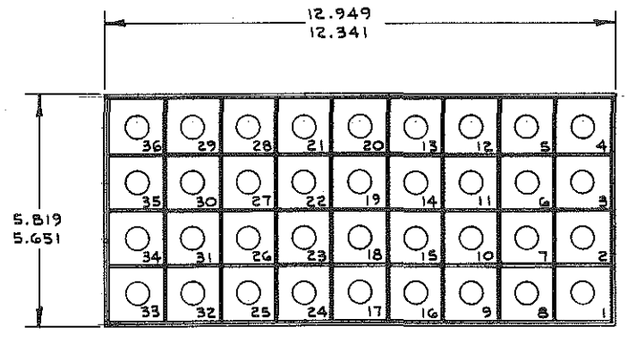

SECTION A-A

SCALE: HALF

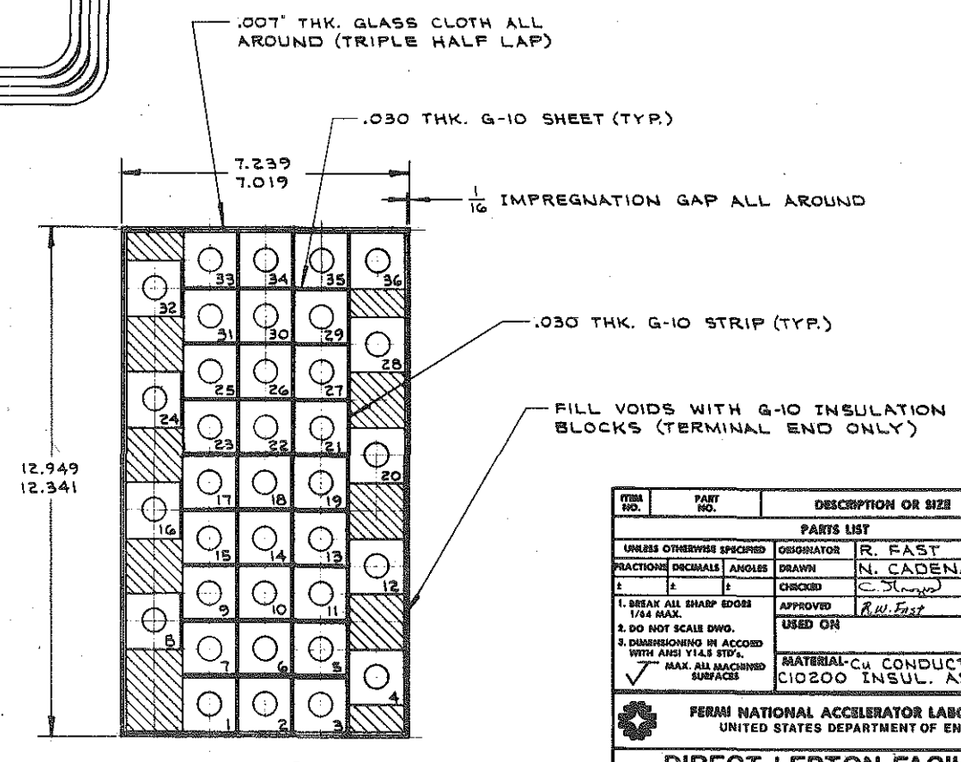

SECTION B-B

SCALE: HALF

ITEM NO.	PART NO.	DESCRIPTION OR SIZE	QTY. REQ.
PARTS LIST			

UNLESS OTHERWISE SPECIFIED			ORIGINATOR	R. FAST	
FRACTIONS	DECIMALS	ANGLES	DRAWN	N. CADENA	5-3-85
±	±	±	CHECKED	C. S. (signature)	5-9-85
			APPROVED	R.W. Fast	5-10-85

1. BREAK ALL SHARP EDGES 1/64 MAX.
2. DO NOT SCALE DWG.
3. DIMENSIONING IN ACCORD WITH ANSI Y14.5 STD's.

MAX. ALL MACHINED SURFACES

USED ON

MATERIAL-Cu CONDUCTOR, UNS-C10200 INSUL. AS SHOWN

FERMI NATIONAL ACCELERATOR LABORATORY
UNITED STATES DEPARTMENT OF ENERGY

DIRECT LEPTON FACILITY
M-1 COIL ASSEMBLY

SCALE	FILMED	DRAWING NUMBER	REV.
1" = 1'-0 NOTED		8-2-77 (CONCEPTUAL) Q-5	

2220.00-MD-193127

BRUNING 40-107

REV.	DESCRIPTION	DRAWN	DATE
		APPD.	DATE

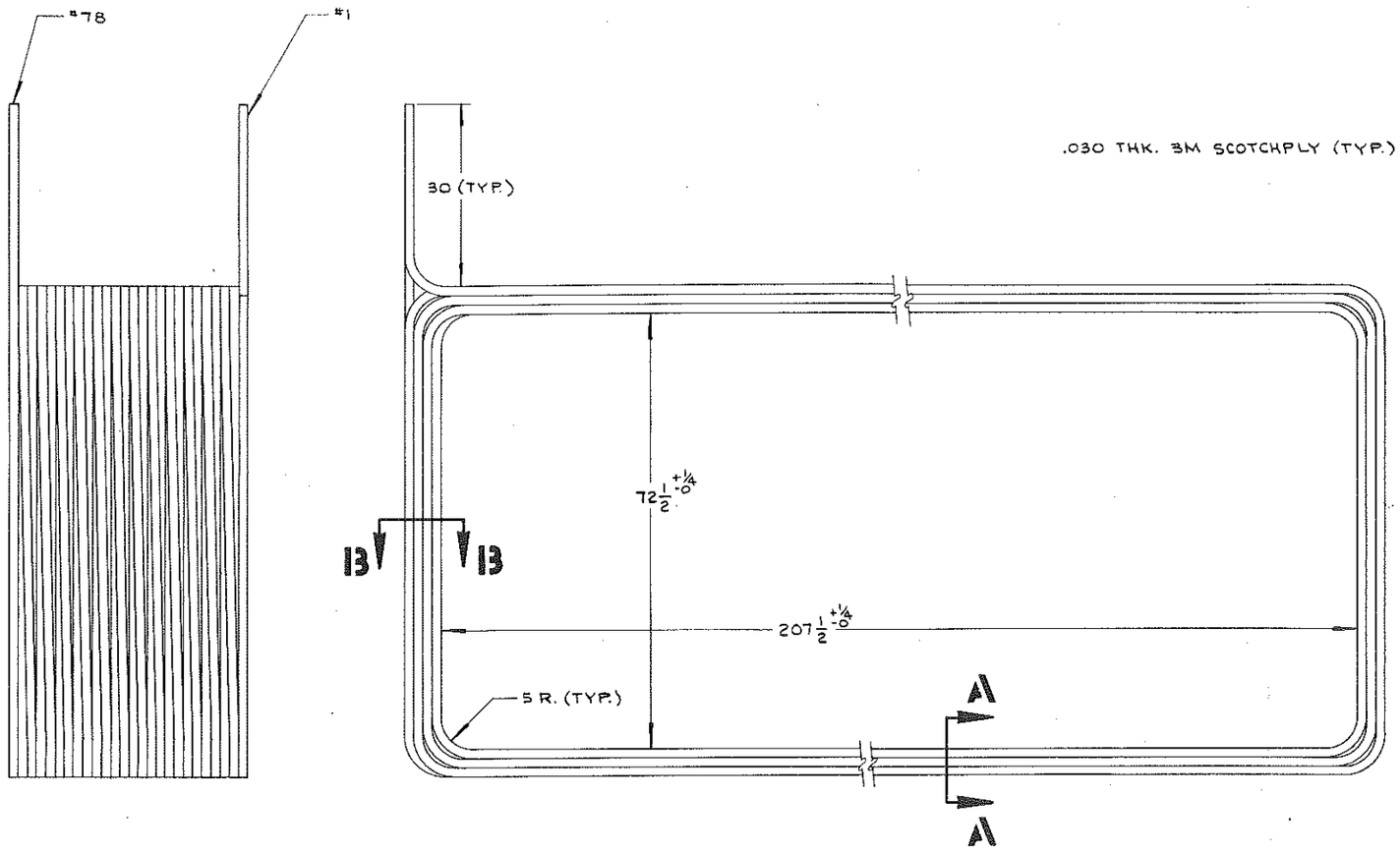

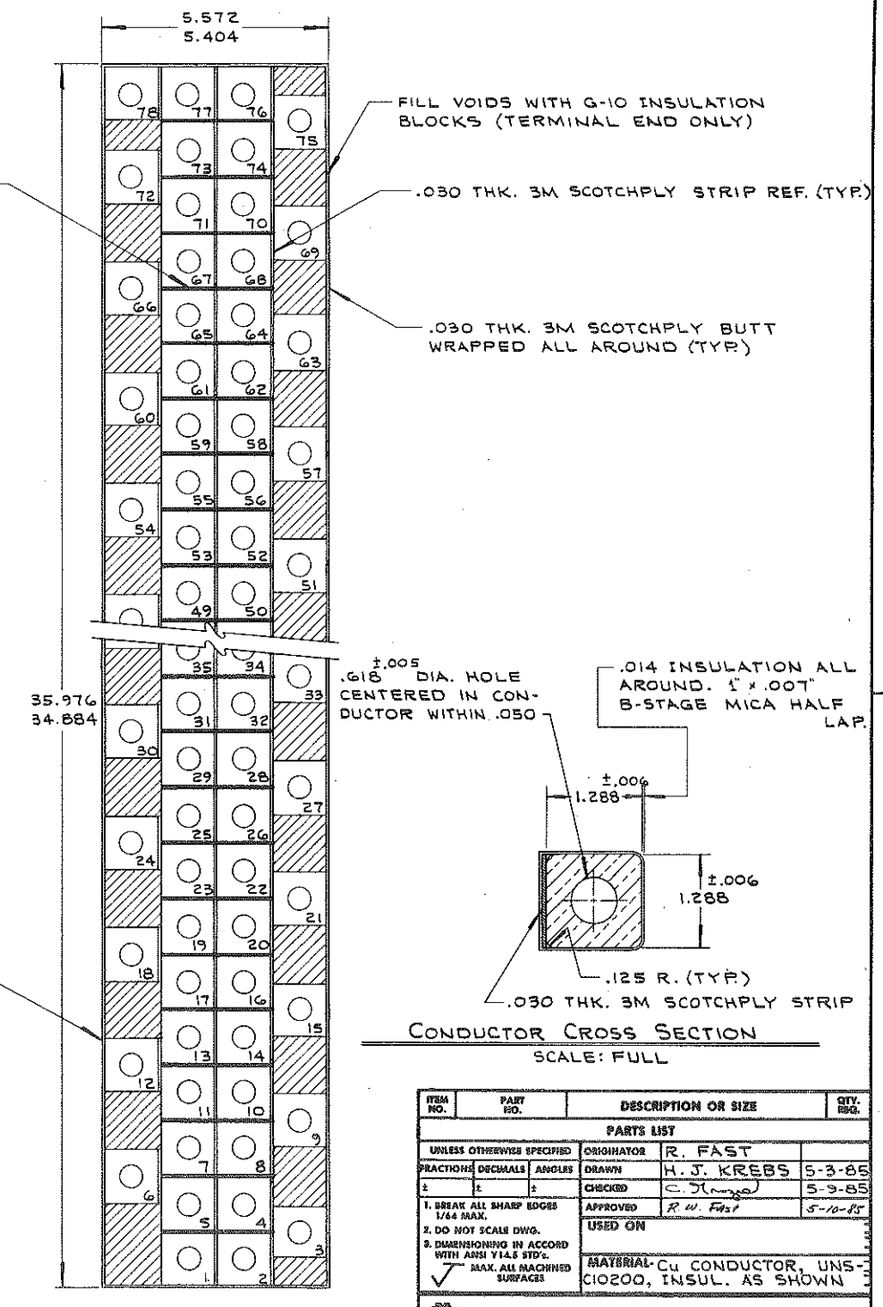

SECTION B – B
SCALE: HALF

CONDUCTOR CROSS SECTION
SCALE: FULL

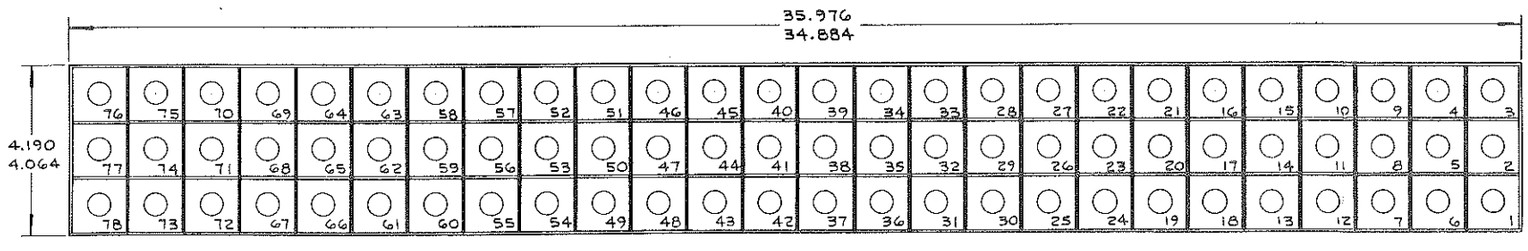

SECTION A – A
SCALE: HALF

ITEM NO.	PART NO.	DESCRIPTION OR SIZE	QTY. REQ.
		PARTS LIST	

UNLESS OTHERWISE SPECIFIED			ORIGINATOR	R. FAST	
FRACTIONS	DECIMALS	ANGLES	DRAWN	H. J. KREBS	5-3-85
±	±	±	CHECKED	C. J. [illegible]	5-9-85
			APPROVED	R. W. Fast	5-10-85

1. BREAK ALL SHARP EDGES 1/64 MAX.
2. DO NOT SCALE DWG.
3. DIMENSIONING IN ACCORD WITH ASME Y14.5 STD's.

✓ MAX. ALL MACHINED SURFACES

USED ON

MATERIAL: Cu CONDUCTOR, UNS-C10200, INSUL. AS SHOWN

FERMI NATIONAL ACCELERATOR LABORATORY
UNITED STATES DEPARTMENT OF ENERGY

DIRECT LEPTON FACILITY
M-2 COIL ASSEMBLY

SCALE	FINISH	DRAWING NUMBER	REV.
1" = 1'-0 NOTED		8-2-77 (CONCEPTUAL) Q-6	

2220.00-MD-19125

BRUNING-42-107

REV.	DESCRIPTION	DRAWN / APPD.	DATE / DATE

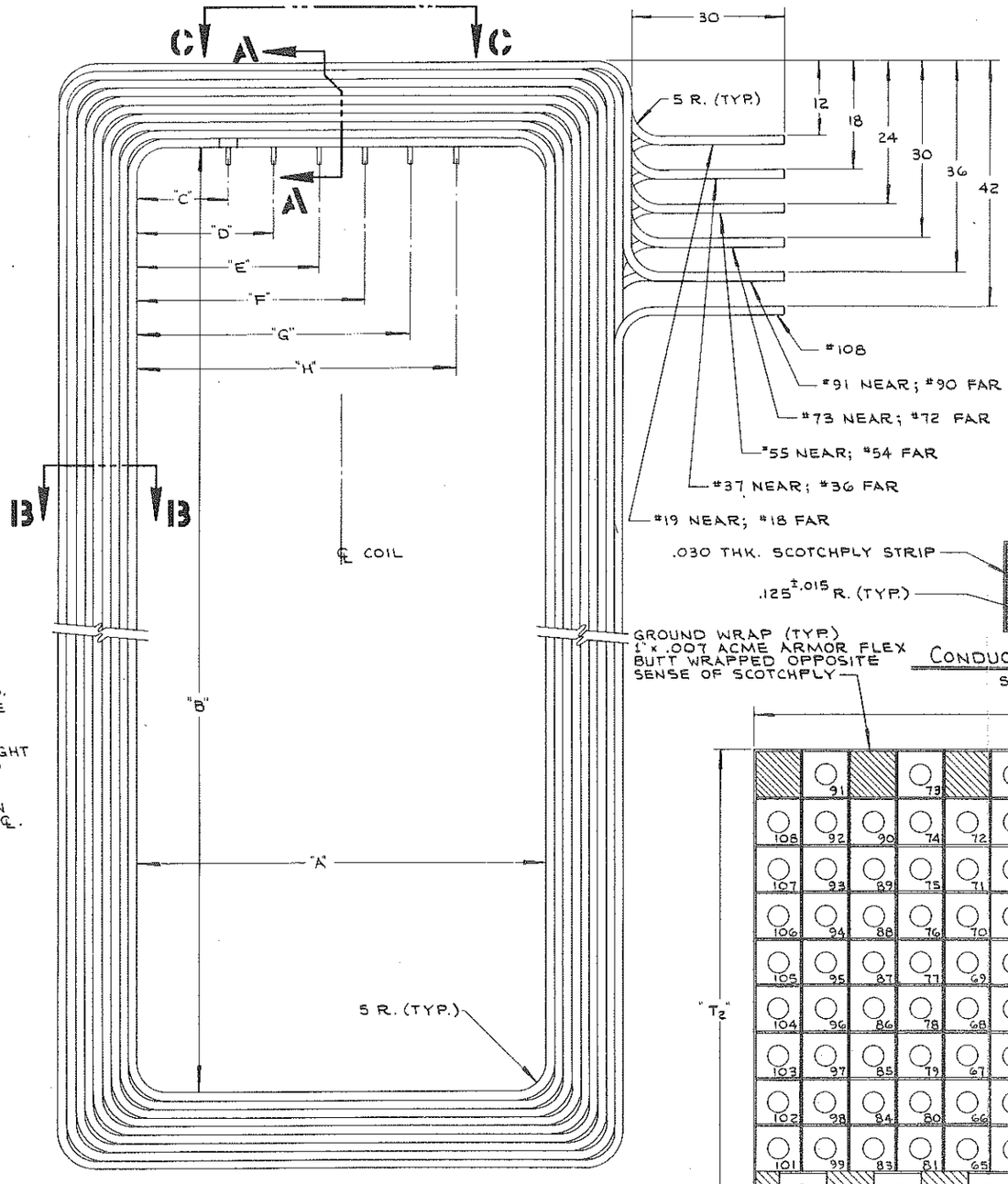

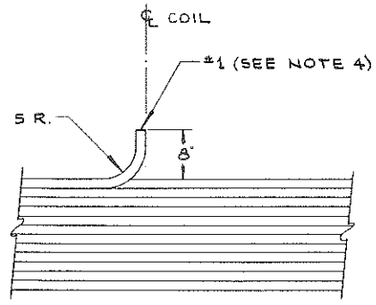

VIEW C - C

SCALE: 1" = 1'-0

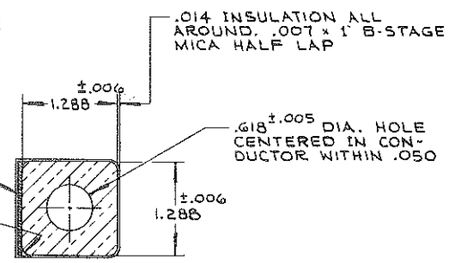

CONDUCTOR CROSS SECTION

SCALE: FULL

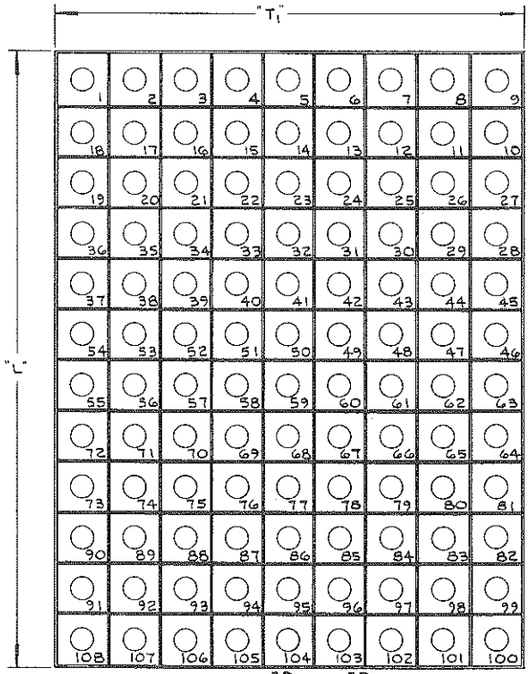

SECTION B - B

SCALE: HALF

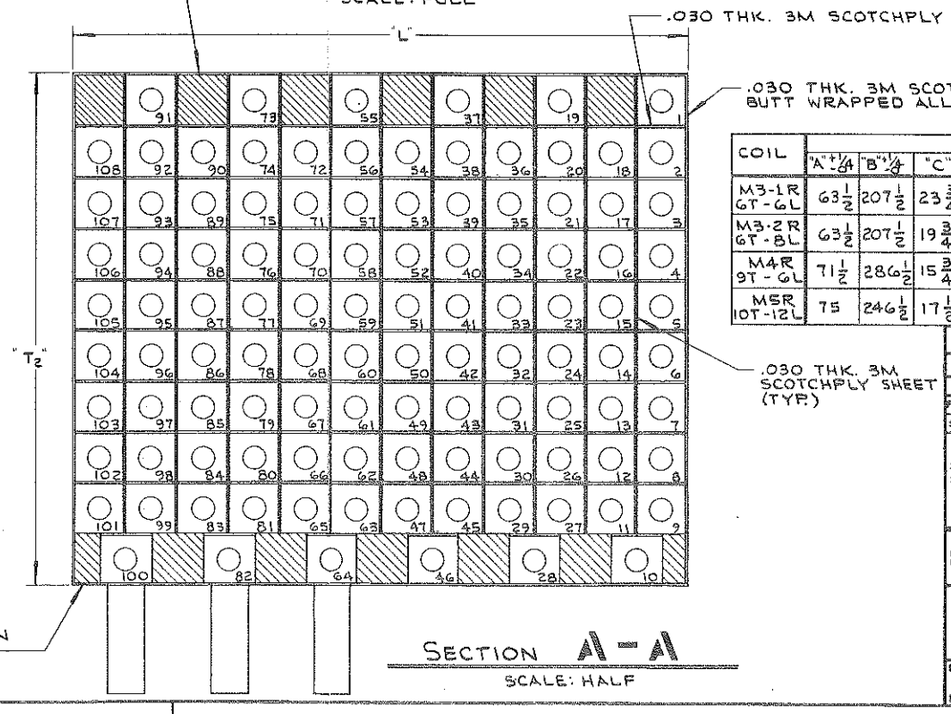

SECTION A - A

SCALE: HALF

NOTES:

1. THERE ARE (2) M4R COILS.
2. COILS LISTED IN TABLE ARE RIGHT HAND COILS.
3. LEFT HAND COILS ARE MIRROR IMAGES OF RIGHT HAND COILS EXCEPT AS NOTED.
4. ON LEFT HAND COILS, PIGTAIL #1 SHALL BE ON OPPOSITE SIDE OF COIL ℄.

COIL	DIMENSION "A" ±1/4	"B" ±1/4	"C"	"D"	"E"	"F"	"G"	"H"	"L"	"T1"	"T2"
M3-1R 6T-6L	63 1/2	207 1/2	23 3/4	31 3/4	39 3/4	—	—	—	8.336 8.084	8.336 8.084	9.718 9.424
M3-2R 6T-8L	63 1/2	207 1/2	19 3/4	27 3/4	35 3/4	43 3/4	—	—	11.100 10.764	8.336 8.084	9.718 9.424
M4R 9T-6L	71 1/2	286 1/2	15 3/4	23 3/4	31 3/4	39 3/4	47 3/4	55 3/4	8.336 8.084	12.482 12.104	13.864 13.444
M5R 10T-12L	75	246 1/2	17 1/2	25 1/2	33 1/2	41 1/2	49 1/2	57 1/2	16.628 16.124	13.864 13.444	15.246 14.784

ITEM NO.	PART NO.	DESCRIPTION OR SIZE	QTY. REQ.

PARTS LIST

UNLESS OTHERWISE SPECIFIED			ORIGINATOR	R. FAST	
FRACTIONS	DECIMALS	ANGLES	DRAWN	H. J. KREBS	5-3-85
± 1/8	±	±	CHECKED	C. D. [illegible]	5-9-85
			APPROVED	R. W. Fast	5-10-85

1. BREAK ALL SHARP EDGES 1/64 MAX.
2. DO NOT SCALE DWG.
3. DIMENSIONING IN ACCORD WITH ANSI Y14.5 STD'S.

√ MAX. ALL MACHINED SURFACES

USED ON

MATERIAL: Cu. CONDUCTOR, UNS-C10200, INSUL. AS SHOWN

FERMI NATIONAL ACCELERATOR LABORATORY
UNITED STATES DEPARTMENT OF ENERGY

DIRECT LEPTON FACILITY

M-3,4,AND 5 COIL ASSEMBLIES

SCALE	FILMED	DRAWING NUMBER	REV.
1"=1'-0" & NOTED		8-2-77 (CONCEPTUAL) Q-7	

2220.00-MD-193119

BRUNING 40-107

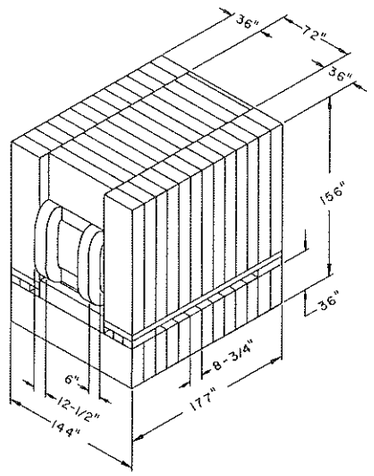

MAGNET M-1

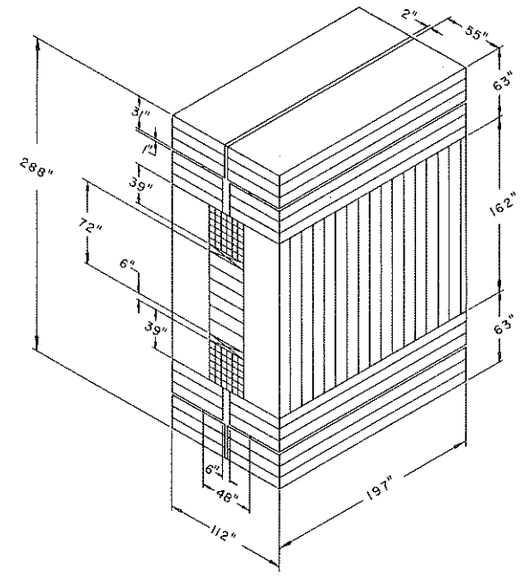

MAGNET M-2

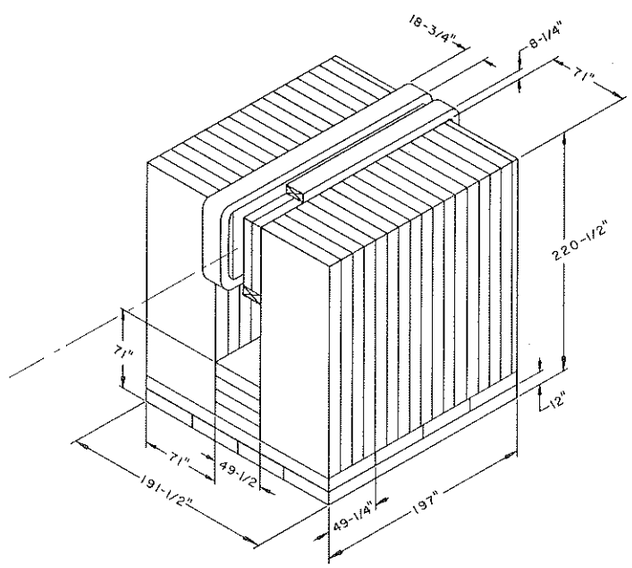

MAGNET M-3

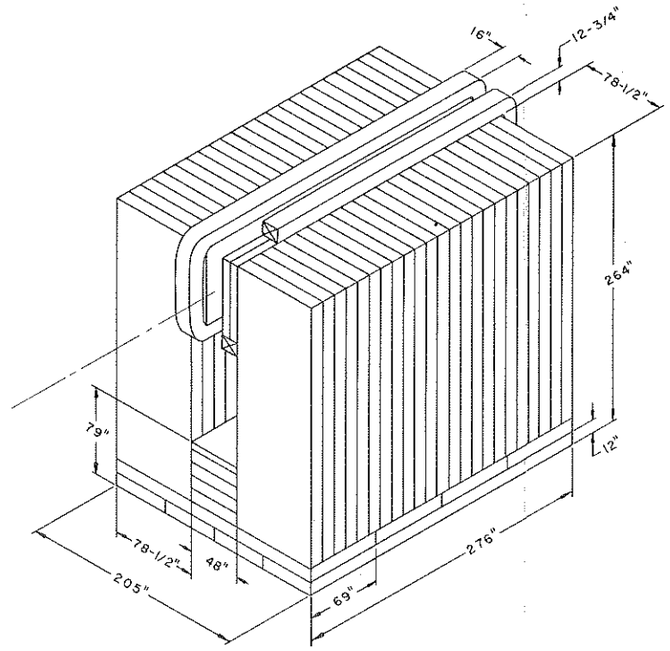

MAGNET M-4

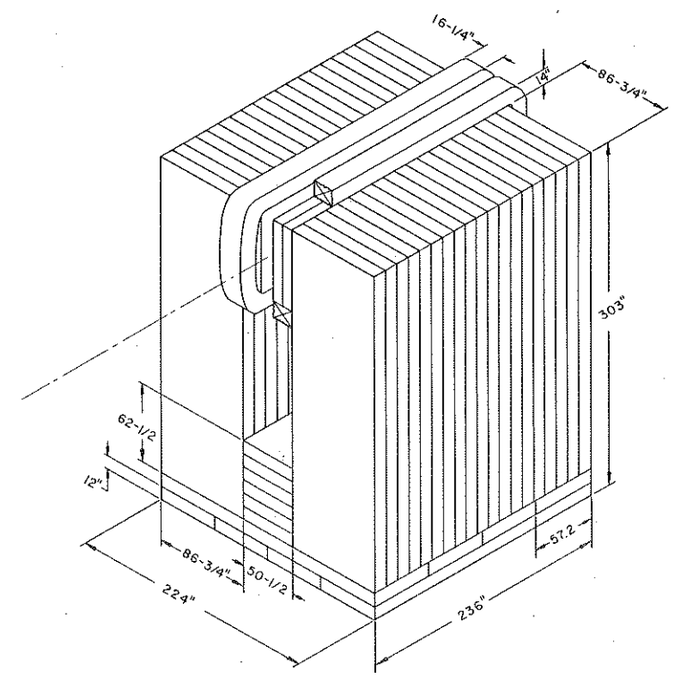

MAGNET M-5

REV.	DATE	DESCRIPTIONS
		REVISIONS
DESIGNED		
DRAWN		
CHECKED		
APPROVED		
SUBMITTED		

FERMI NATIONAL ACCELERATOR LABORATORY
UNITED STATES DEPARTMENT OF ENERGY

DIRECT LEPTON FACILITY
MAGNET M-1 THRU M-5
ISOMETRICS

DRAWING NO. 8-2-77 (CONCEPTUAL) Q-8 REV.