THE ENERGY SAVER

A DESIGN REPORT FOR THE ENERGY SAVER PROJECT

January 1978

FERMI NATIONAL ACCELERATOR LABORATORY

BATAVIA, ILLINOIS

Operated by Universities Research Association, Inc.,
under contract with the U.S.Department of Energy.

TABLE OF CONTENTS

		Page
I	Introduction	1
II	Progress of the Superconducting-Magnet Development Program	10
III	Design of the Energy Saver	27
IV	Schedule and Estimated Cost	52

Appendix I		Energy Doubler Magnet-Measurement and Production-Magnet Test Facility	- R.Yamada	I-1
	II	Laminated Tooling	- W.Hanson	II-1
	III	Coil-Size Measurements	- K.Koepke	III-1
	IV	Sector Test Demonstration	- J.R.Orr	IV-1

LIST OF ILLUSTRATIONS

Figure		Page
	Frontispiece	
I-1	Aerial View of Site	5
II-1	Cross section of Energy Saver dipole	12
II-2	Energy Saver Superconducting Wire	13
II-3a	Cabling Machine	16
II-3b	Cable Cleaning and Taping Machine	16
II-4	Cross section of Energy Saver quadrupole	17
II-5	Quadrupole and correction-element assembly	18
II-6	Correction-element details	19
II-7	Model of a Satellite Refrigerator	22
II-8	Feed box	23
II-9	Double turn-around box	24
II-10	Prototype Satellite Refrigerator	25
II-11a	Central Helium Liquefier Cold Box - Open	26
II-11b	Central Helium Liquefier Controls	26
II-11c	Central Helium Liquefier Cold Box - Ready for shipment	26
III-1	Lattice of the Energy Saver Ring	28
III-2	Main Ring to Energy Saver Ring beam transfer system	29
III-3	Energy Saver RF cavity	37
III-4	Extraction channel to experimental area	40
III-5	Energy Saver beam-abort system	41
III-6	Refrigeration schematic	48
III-7	Satellite-refrigerator modes	51
IV-1	Energy Saver Program Schedule	54

LIST OF ILLUSTRATIONS (Cont'd)

Figure		Page
A-I-1	Load lines and training for E22-19	I-3
A-I-2	Parameters during quench for E22-52D	I-4
A-I-3	AC loss for E22-19	I-5
A-I-4	Field homogeneity of E22-19 measured with NMR	I-8
A-I-5	Integral field value for E22-33	I-9
A-I-6	Sextupole components of E22-52D	I-12
A-I-7	Field reconstruction from harmonic components for E22-52D	I-13
A-I-8	Layout for production magnet test facility	I-14
A-I-8a	Compressor System being installed	I-15
A-I-8b	Cold Box installed in Industrial Building #1	I-16
A-I-8c	Warm Brake Wheel	I-17
A-I-8d	Cold End of Expander	I-18
A-I-8e	Two Turbine Assemblies	I-19
A-II-1	Collection of Laminations	II-3
A-II-2	Laminated tooling prior to winding second Shell	II-4
A-II-3	Completed winding ready for curing	II-5
A-III-1	Dipole E22-32 inner coil conductor placement error	III-3
A-III-2	Special Gauge to measure mean arc length	III-4
A-III-3	Special Gauge in use	III-5
A-III-4	Average oversize for six production dipoles measured with azimuthal coil gauge. Error bars are standard deviation of eleven measurements along length of coil	III-6

LIST OF ILLUSTRATIONS (Cont'd)

Figure		Page
A-IV-1	Temporary Jacks to hold Main Ring Magnets	IV-3
A-IV-2	Pivoted Stand	IV-4
A-IV-3	View of milled out Main Ring Support	IV-5
A-IV-4	Energy Saver Magnet Supports	IV-8
A-IV-5	Technician connecting Magnets	IV-9
A-IV-6	Four Magnet Test String in place	IV-10

I. INTRODUCTION

A. Description of the Project

The Energy Saver will be the world's first superconducting synchrotron. The present Fermilab routine operating energy of 400 GeV for Fermilab is identical to that at the CERN Laboratory in Geneva, Switzerland. The Energy Saver will make it possible to raise that energy to 500 GeV, the highest in the world. It will also make it possible to accelerate protons to 1000 GeV for use in experiments in the Internal Target Area. Furthermore, it will provide greater flexibility in operating conditions. At the same time, it will permit a significant saving of energy and operating funds.

The Energy Saver is part of the Fermilab Tevatron project described in an attached Design Report. It is to be constructed and installed in the existing Main-Ring tunnel. A ring of approximately 1000 supermagnets and an rf acceleration system will be added and the present Main-Ring synchrotron will be used as the injector into the new ring.

The frontispiece of this report is a photograph of a test installation of Energy Saver magnets in the tunnel, showing how they fit under the present Main-Ring magnets in space that was reserved for the new ring in the original construction of Fermilab. A construction project is proposed for FY 1979 for $38.9 million to provide for commissioning of the Energy Saver in 1980. This project is made possible by the accomplishments of the Fermilab research and development program, supported by AEC, ERDA and DOE over the past six years.

This research and development project has made significant advances in the last year, since the TeV Program report was written. In this year, we have solved the problems of producing magnetic fields of the desired quality and reproducibility. We have increased the production rate of dipole magnets to the desired level in test production runs. We have produced models of superconducting quadrupoles with satisfactory magnetic fields. We have put into

operation a Production Magnet Test Facility that enables us to make magnetic tests accurately and efficiently on many mangets. We have developed a system of magnet protection that will safeguard the superconducting magnets in the event of a "quench", when the large amount of energy stored in the magnetic field must be dissipated quickly. We have developed a power-supply system making use of existing Main-Ring power supplies and controls and have successfully powered a string of eight magnets. We have refined the design of the magnet lattice, the magnets themselves, and orbit-correction elements. We have carried out installation tests of magnets in the Main-Ring tunnel and are presently installing a complete sector. We have built a Central Helium Liquefier, which will be commissioned beginning in the Spring of 1978. We have stimulated industrial participation in the project and are now beginning to take delivery of significant quantities of materials fabricated in private industry. Our development effort has brought the Energy Saver to a point where funding of construction in FY 1979 is appropriate and timely.

The Fermilab accelerator system has operated at 500 GeV, 2-1/2 times its original design energy, but operation is normally limited to 400 GeV for reasons of cost and of energy conservation. The Energy Saver will make it possible to operate in a mode that could routinely deliver 500-GeV proton beams to all experimental areas at a power cost more than $5 million per year less than that incurred using the present accelerator system in an equivalent operating mode at only 400 GeV. The energy increase to 500 GeV will be important for the physics program of Fermilab. The Energy Saver will be the highest-energy accelerator in the world. Both the maximum energy and the intensity of secondary beams will be increased substantially by this increase. Better duty factor and beam spill will be possible at no extra cost. In addition, the saving in energy costs could release operating funds that are badly needed for the Fermilab research program.

The Energy Saver, which was described in detail in the 1977 Tevatron Design Report, will bring important new capabilities to the laboratory. In itself, its construction will constitute an

important contribution to the development of a critically needed technology. But most important of all, completion of the Energy Saver will make it possible to accelerate protons to 1000 GeV (1 TeV). The repetition rate at 1000 GeV will be high enough to support a full research program, but the Energy Saver construction project does not include provision for the superconducting external-beam magnets needed to bring 1000-GeV protons to all external-target experimental areas. Capability will be provided through other funds to deliver a 1000-GeV beam to one experimental area, the Neutrino Area, whose position on the Fermilab site is shown in the aerial photograph of Fig. I-1. The capability to support a full research program at 1000 GeV in all areas can be added later. Proposals for the implementation of a 1000-GeV research program have been submitted for FY 79 and will be resubmitted, when appropriate, for consideration of funding in FY 80.

The Energy Saver will also provide the means to store circulating beams and to make proton-proton and proton-antiproton colliding beams. Experimental Areas and a large detector for colliding beams are not included in the Energy Saver project, but can be added later. The new superconducting magnet ring at Fermilab should assure a continuation of the important research that has characterized US physics for the last several decades.

The CERN Laboratory began its 400-GeV research program early in 1977 with an accelerator essentially identical to that at Fermilab, but with an annual operating budget more than twice that of Fermilab. This funding advantage makes it possible for them to mount experiments that are better instrumented and to do so more rapidly than is possible at Fermilab. The Energy Saver, at 500 GeV, will re-establish the capability in the US to probe fixed-target physics at a higher laboratory energy than anywhere else in the world. Completion of the Tevatron will raise the energy to 1 TeV, more than twice that now available at CERN. It will provide the Laboratory's research program with an element of uniqueness that should offset the advantage of CERN's substantially higher budget.

CERN has started a program to collide antiproton and protons in its main ring. Fermilab offers the exciting possibility of very high energy $\bar{p}p$ collisions, well above the CERN and ISABELLE energy range. Thus the Energy Saver will be a large first step toward exploration of a new energy regime of increasing interest to high-energy physics.

When the Energy Saver magnets have been installed along the full length of the 4-mile accelerator ring, it will be the most ambitious application of superconductivity to date. It will therefore pioneer what is likely to become an important component of future technology relevant to conserving our dwindling energy resources.

The Energy Saver project will build on the work of the preceding research and development program, which has led to a basic design and to the construction of a number of prototype elements. The new construction project will provide for completion of the superconducting dipoles, quadrupoles, correction elements and refrigeration equipment as well as the mounting stands for these magnets, power supplies and controls adapted from present Main-Ring systems, radio-frequency accelerating cavities, amplifiers and other rf equipment, a beam-extraction system, modifications to existing utility-distribution systems and small building additions at the RF Building and Transfer Hall of the Main Ring. Some of the magnets needed to make a complete ring will be selected from the prototypes produced as part of the research-and-development project.

As we have stated earlier, the Energy Saver project can be viewed as a first phase of a larger Fermilab TeV Program. But the Energy Saver project stands alone. It will bring benefits of energy and cost savings and an enhancement of the Fermilab physics program. In the remainder of this introductory chapter, we shall describe the evolution of the project and summarize the costs and schedules of the proposed Energy Saver construction. Subsequent chapters will describe the lattice, magnets, power supplies, vacuum, rf acceleration system, and beam extraction system, and give details of the costs and schedules. Some special parts of our development program are discussed in detail in the appendices.

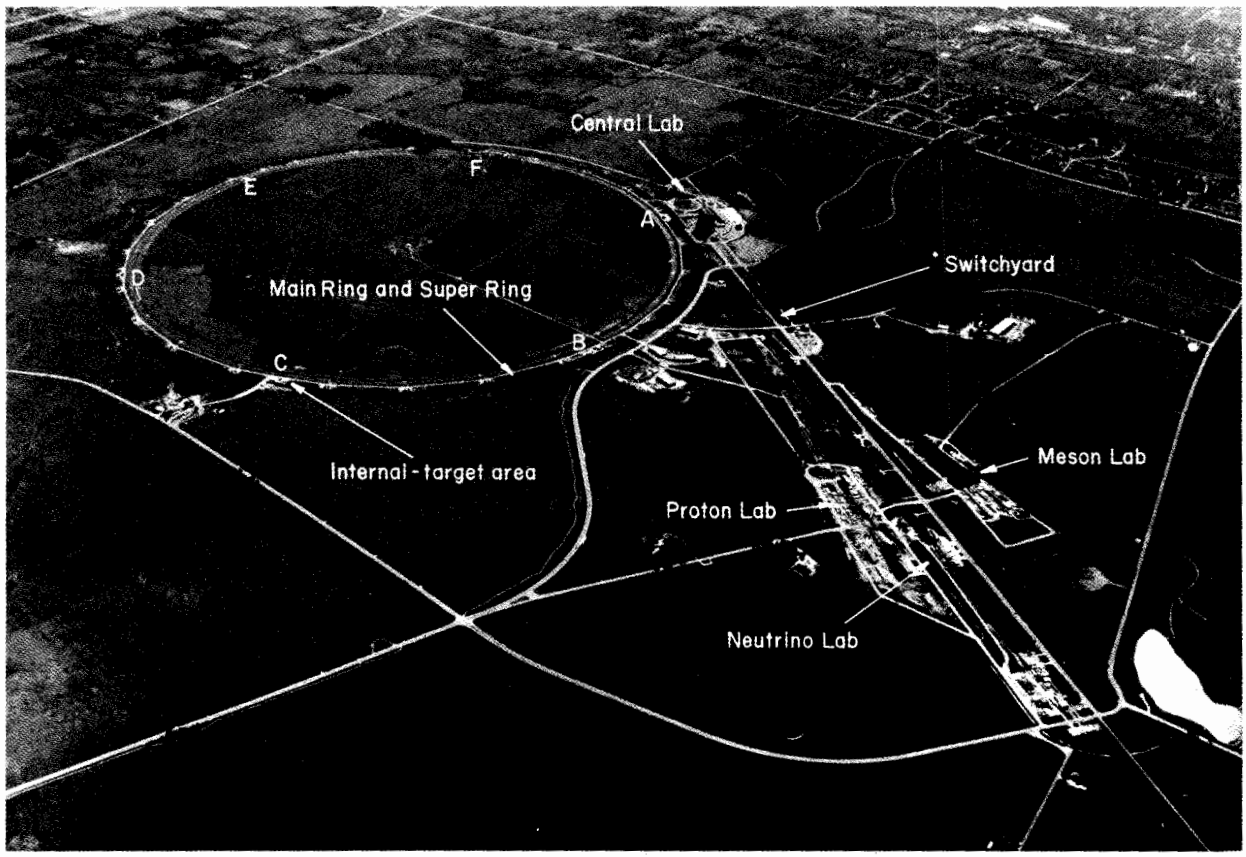

Fig. I-1 Aerial view of Site

B. Evolution of the Energy Saver

In the original design of the Fermilab accelerator, consideration was given to the use of superconducting magnets. With such magnets, the peak magnetic field could be double that attainable with conventional copper and iron magnets, thereby doubling the maximum achievable energy. The technology of superconductivity was not yet sufficiently advanced at that time, a decade ago. The accelerator was therefore designed with conventional magnets, but space was left in the accelerator tunnel for the possible addition of a second ring at a later time. Serious development work on superconducting accelerator magnets at Fermilab began in 1972, after the Fermilab accelerator had achieved its design energy.

The present 400-GeV accelerator is actually an extension, within the initially authorized construction cost, of the 200-GeV accelerator originally specified for Fermilab. It has always seemed natural that, when the technology of superconductivity was sufficiently developed, the extension in energy should be carried through another doubling, in fact to the 1-TeV level. It has now become possible to achieve that goal by supplementing the original ring of conventional magnets with a second ring of superconducting magnets, as shown in the frontispiece.

The idea of a superconducting magnet ring had already been put forward well before the present energy crisis had been widely understood, but with the escalating cost of electrical energy, and with the limited operating budget and large cost of power at Fermilab, it became clear that one of the most important attributes of such a ring of magnets would be its potential saving of energy and of operating cost. At the same time, it should be noted that the construction of the Energy Saver will automatically bring with it the potential of 1000-GeV operation and of colliding-beam storage rings.

The idea of storage rings at Fermilab is not a new one. The size of a site for the laboratory specified by the AEC was increased during the site-selection process to make it possible to

accommodate storage rings at some future time. In 1968, at the time the accelerator was positioned on the site, a design study was made of the construction of a pair of intersecting storage rings and a Design Report was published in 1968. In 1972, as work proceeded on the early stages of development of magnets for the Energy Doubler/Saver, physicists became interested in the idea of a pair of intersecting storage rings that would accept the 1000-GeV beam from the Doubler/Saver.

At the end of 1973, acting in accordance with the guidance of its Long Range Advisory Committee, a nationally representative group of high-energy physicists, the Laboratory intensified its study of intersecting storage rings. That work culminated in a collaborative effort by staff members of the Argonne National Laboratory and the Fermi National Accelerator Laboratory. That working group produced a Design Study for POPAE (Protons On Protons And Electrons). That Design report, dated May 1976, describes a possible pair of intersecting storage rings. The estimated cost, at an energy of 1 TeV on 1 TeV, was close to $250 million in FY 76 dollars. The design group also made an estimate for a project of reduced scope in which the intersecting storage rings would carry protons only up to an energy of 500 GeV, to give a center-of-mass energy of 1 TeV. The cost of such a facility was estimated to be around $150 million, also in FY 76 dollars.

Concurrently with the development of the POPAE design, the Laboratory was considering alternative and less expensive approaches to the achievement of collisions with very high energy in the center-of-mass. These approaches have evolved into the colliding-beams parts of the TeV Program. As a result of this evolution it now appears to be premature to make a commitment to a particular POPAE design. Instead a gradualist approach becomes possible, one under which the problems of physics and technology can be explored using a low-cost facility before a final design for a pair of high energy intersecting storage rings of full scope is completed.

C. Implementation of the Energy Saver Project

When construction is complete, the Energy Saver will become an integral part of the Fermilab accelerator system. Beam will be transferred from the Main Ring to the Energy Saver at an energy of approximately 100 GeV, then accelerated to the desired final energy at a rate of 50 GeV/sec. The precise energy of beam transfer will be optimized experimentally in operation.

At any final energy up to 1000 GeV, the Energy Saver is capable of a flattop of any length desired without additional consumption of electrical energy. Thus duty factors of close to 100% in the experimental program can be achieved, while at the same time large energy savings are being realized.

The present Fermilab research program makes use of complex combinations of fast beam spill and uniform slow spill throughout the length of the flattop, using the fast spill for many neutrino experiments and slow spill for many hadron experiments. These combinations of fast and slow spill will be continued with the Energy Saver. In fact, more uniform extraction from the superconducting magnet ring will be possible because there will be smaller field jitter in the superconducting magnets.

D. Summary of Costs and Schedules for the Energy Saver

1. Schedule. Construction of the Energy Saver would begin in FY 1979. It would depend on research and development carried out prior to FY 1979 and, because of this R&D, rapid construction is possible.

   We plan on circulating beam and first acceleration in FY 1980. The next year, FY 1981, will be used for completion of construction of the acceleration, extraction, and control systems.

2. Costs. The following is a table of costs by fiscal year which were judged by Fermi National Accelerator Laboratory to be the optimum costing rate for efficient completion of

the Energy Saver and were requested as Fermilab's preferred funding schedule for this project. This rate of funding has not been requested in the President's budget message for FY 79 authorization of this project. Fermilab will endeavor to complete the Energy Saver within the overall cost estimate even though this is judged to be difficult because of the extension of the project which carries likely increased costs arising from escalation and continuation of salaries for the longer period.

Fiscal Year	Authorization	Obligations	Costs
1979	$38,900,000	$ 32,500,000	$30,000,000
1980	--	6,400,000	8,900,000

E. Fermilab Longer-Range Plan for Implementation of the Tevatron

The Energy Saver project is one part of a full Fermilab TeV program presented by the Laboratory in a Design Report in 1977. There are four parts in the complete program, the Energy Saver construction, the Energy Doubler/Saver supporting research and development program, colliding-beams experimental facilities, and 1-TeV fixed-target experimental facilities. It is the intention of Fermilab to seek authorization for further implementation of this program in FY 1980.

II. PROGRESS OF THE SUPERCONDUCTING-MAGNET DEVELOPMENT PROGRAM

During the original design of the Fermilab accelerator in 1967 and 1968, space was left in the Main-Ring tunnel for another magnet ring, intended from the start to utilize superconducting magnets. Space was also provided in the Main-Ring service buildings for the associated cryogenic equipment. A small group began to work on superconducting-magnet development in 1972, after the Fermilab accelerator had achieved its design energy of 200 GeV. This work has continued and has been expanded in effort up to the present.

At the outset, a number of tentative design principles were established. Among these are:

(i) The cycle time of the Energy Saver was picked with the the realization that the first ramping supermagnets to be developed might be ramped more slowly than conventional magnets. It was deemed that a desirable goal would be to achieve an average intensity of about 10^{12} protons per sec, which implies a cycling time of about one minute. At this cycling rate, the thermal load originating from induced currents is a small part of the refrigeration load. It should be emphasized that there is always an option of increasing the repetition rate and hence the average proton intensity by increasing the rf capability and the refrigeration capacity.

(ii) The magnet dewars would themselves play the role of transfer lines carrying coolant from and back to the refrigerators located in the service buildings.

(iii) The magnets would have a cold beam tube to simplify construction and to minimize heat leak.

(iv) The magnet iron used to enhance the magnetic field would be at room temperature to reduce the cooldown time and would always be below saturation, thus ensuring field linearity with excitation.

(v) The current in the conductor would be consistent with utilization of existing Main-Ring power supplies for

magnet excitation at the highest practical current density.

(vi) The protons would be extracted and transported into the present external experimental areas.

The program has been aimed at the development of the superconducting magnets and the refrigeration system for cooling these magnets to liquid helium temperature, based on the design principles outlined above.

A. Magnets

The more difficult type of superconducting magnet, the dipole, was chosen for the initial development work. Nearly 100 test magnets, most of which were 1 ft or 5 ft in length, have been built to investigate the behavior of supermagnets and to develop mechanical structures and refrigeration systems.

From this work, we have reached a better understanding of the phenomenon of training in superconducting magnets. Training appears to come from very small motions of the superconductor during excitation. Local frictional heating arising from these movements causes quenching of the superconducting state. Knowing this, we can design to minimize training and are now able to build magnets that reach or exceed their design fields with only minimal training. Magnets remember their training over long periods of time and through many temperature cycles, provided that the basic coil-support structure is not disturbed. The cross-section of the dipole that has evolved from our development is shown in Fig. II-1.

We have studied conductors of many varieties and have settled on a niobium-titanium superconductor stabilized in copper, shown in the photograph of Fig. II-2. Twenty-three strands of this superconductor are twisted into a Rutherford style cable. Each of the 23 strands of 0.027-in. diameter conductor in the cable has 2100 filaments of 8μm diameter. We have worked with domestic fabricators of superconductor to improve their quality control and they are now able to meet our specifications. We have

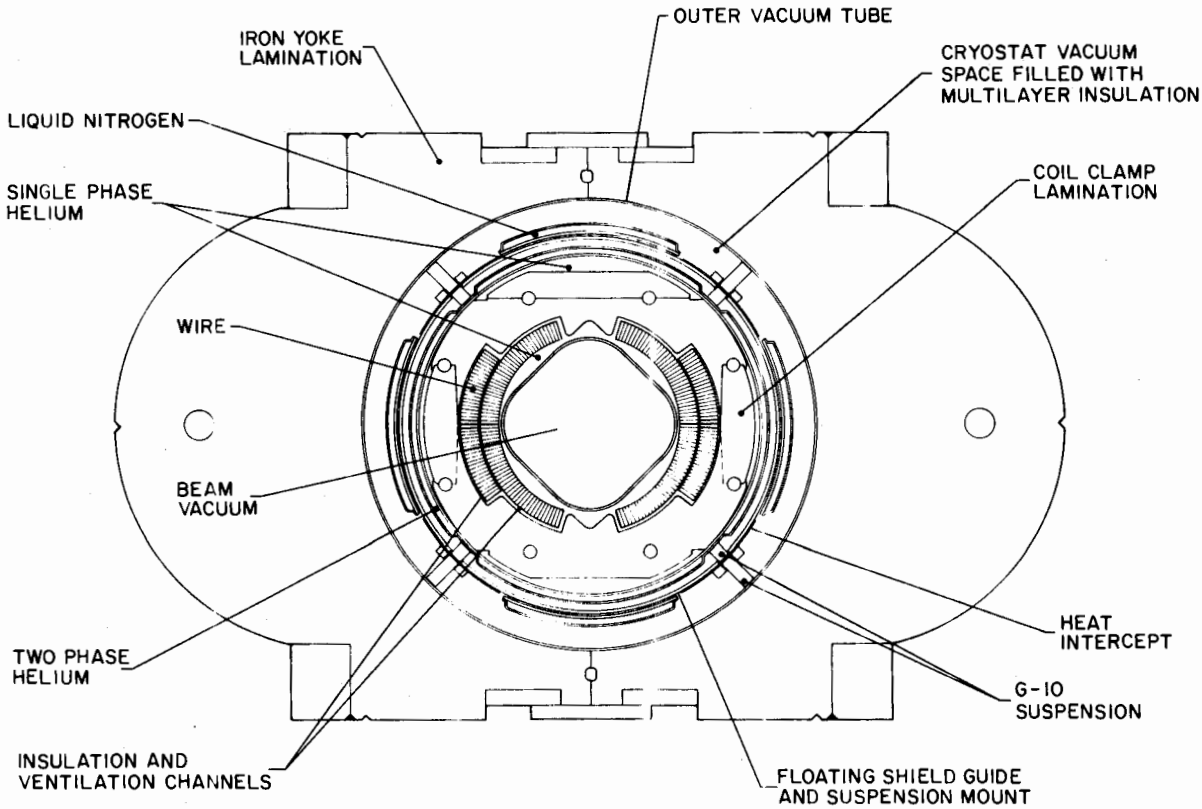

Fig. II-1 Cross section of Energy Saver dipole

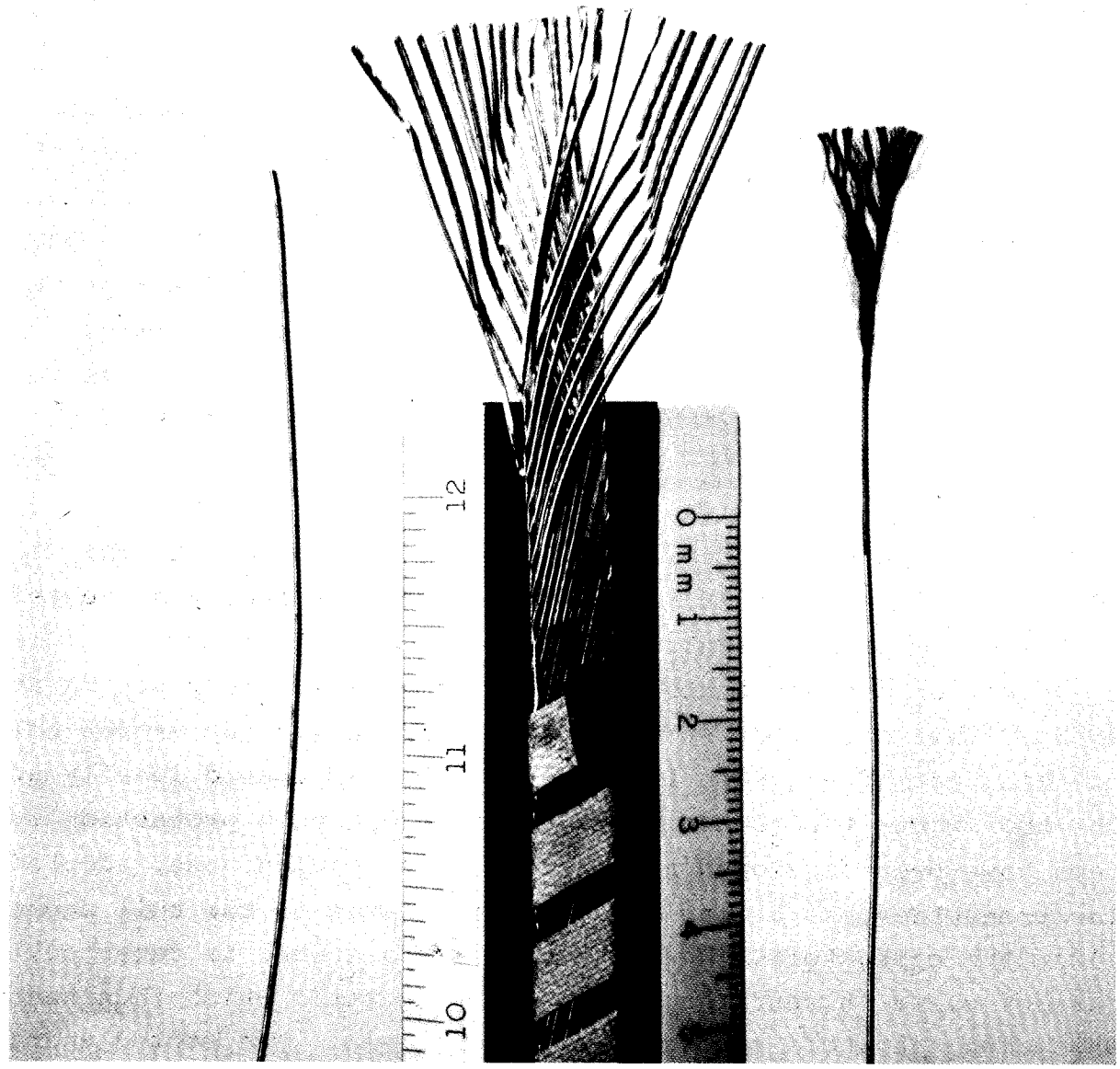

Fig. II-2 Energy Saver Superconducting Wire

developed cleaning and taping procedures and have successfully transferred this technology to industry. Figure II-3a is a photograph of a cleaning and taping machine and Fig. II-3b a photograph of a cabling machine, both of which we have developed. All cable is now received ready for winding into coils.

We have developed a new coil-forming technique in which coils are wound flat, then formed to the desired saddle shape by being pressed over a mandrel. This technique has improved both the precision and the speed of fabrication, and is now used for the fabrication of all full-scale 22-ft magnets.

Several methods of coil support have been explored in our development program. We have settled on a structure utilizing external stainless-steel collars. These collars are pressed on over the coil, transferring sufficient preload to the coils to prevent coil motion both under cooldown and under excitation. We have recently made important improvements in the assembly of the collar system and have reduced coil motion to less than 0.005 in. The magnets now have field distortion due to coil motion small enough that it can easily be dynamically corrected by the correction elements in the quadrupole assembly.

Each dipole has a stored energy of approximately 0.5 MJ at 43 kG. This amount of stored energy will damage the magnet coil in the event of a quench if allowed to be dissipated locally at the spot where the quench starts. Several quench protection systems have been developed and tested. The simplest one, adopted for production, is to include a heating strip in the coil package along the conductors. When the onset of a quench is detected, a current pulse is sent through the heating strip which then heats and makes the whole length of coil go normal. The stored energy is now dissipated over the whole coil and will not cause any damage.

In the last year, we have wound, assembled, and tested 30 full-scale 22-ft dipole magnets. Keystone-shaped wire, improved end configurations and improved collars have been incorporated in these magnets. We are now engaged in extensive magnet testing and field measurements. To test the design and to study the

characteristics of the cryogenic circuit, a string of eight 22-ft dipoles have been excited to full design current. The magnets were cooled by a series helium circuit just as they would be in the ring. Valuable information and experiences were obtained from these "string tests". A commercial refrigerator providing cooling for 6 magnet test stands has been set up. The complete system is being used for production-magnet testing and measurement. Results from measurements made so far on some half-dozen dipoles indicate that the heat load from induced currents during pulsing is within specification and that the field quality is adequate for stable containment of the beam. More measurement data from production magnets are needed to ensure satisfactory statistical characteristics of the ensemble of all magnets in the Energy Saver ring. These measurements are now underway.

Production procedures have also been studied in great detail. We have set up a production line to assemble supermagnets at Fermilab from parts that have been fabricated by private industry. The assembly work has been reduced continually by improving and automating the coil forming and collaring operations. A production rate of one 22-ft magnet per day has been demonstrated. Higher rates can be expected as more tooling comes into operation. We also expect to develop the capability in private industry to produce complete magnets.

Superconducting quadrupoles are inherently easier to design and construct than dipoles. Several quadrupoles have been built and tested to be satisfactory. A cross section of a quadrupole with the current design is shown in Fig. II-4. The design and the fabrication procedure are still being modified to reduce fabrication manpower and to improve performance.

The quadrupole and higher-order multiple correction elements fit together in what was called the "mini-straight section" in the Fermilab Main Ring. Figure II-5 shows one such straight section and Fig. II-6 shows the details of the correction windings. The correction quadrupole is separate from these windings. The one shown is the simpler type of quadrupole assembly. The other type has the added complexity of current and cryogenic leads from the

Fig. II-3a Cabling Machine

Fig. II-3b Cable Cleaning and Taping Machine

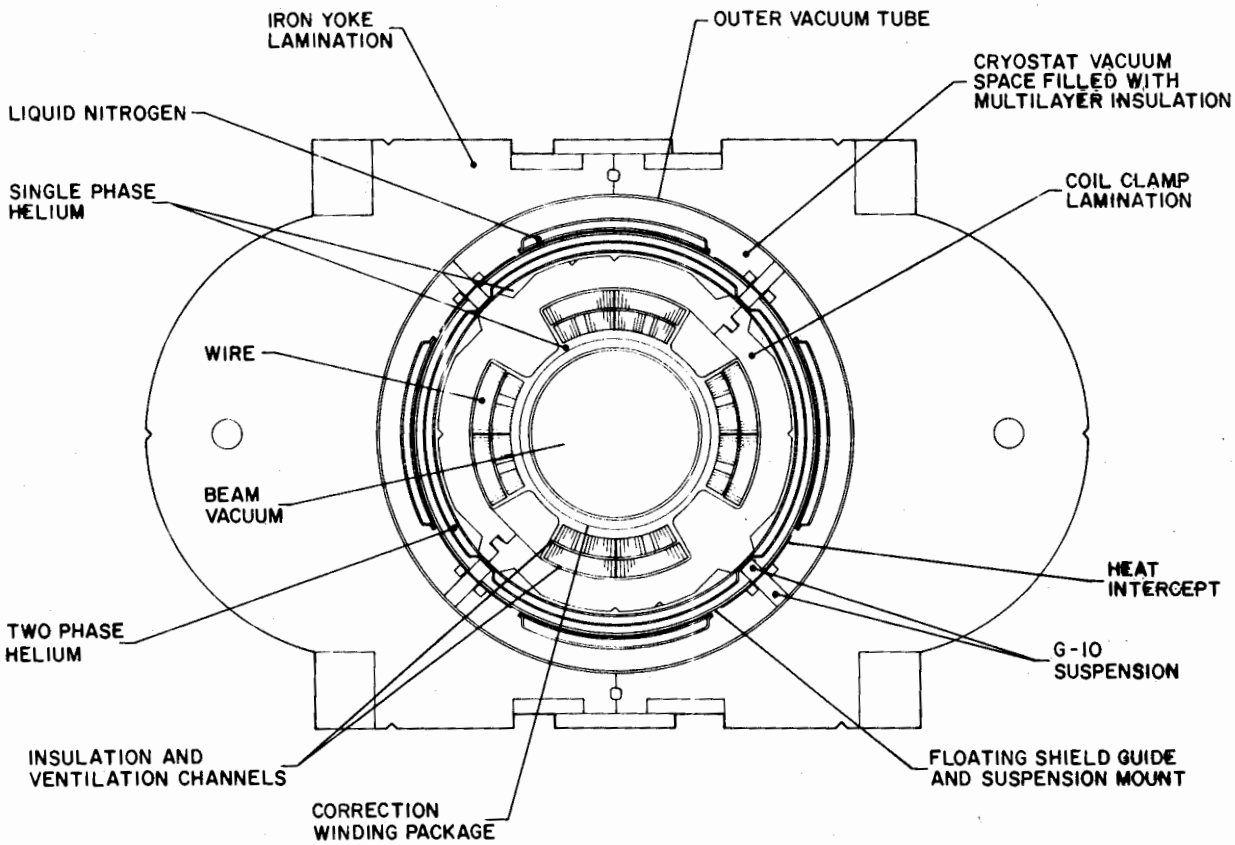

Fig. II-4 Cross section of Energy Saver quadrupole

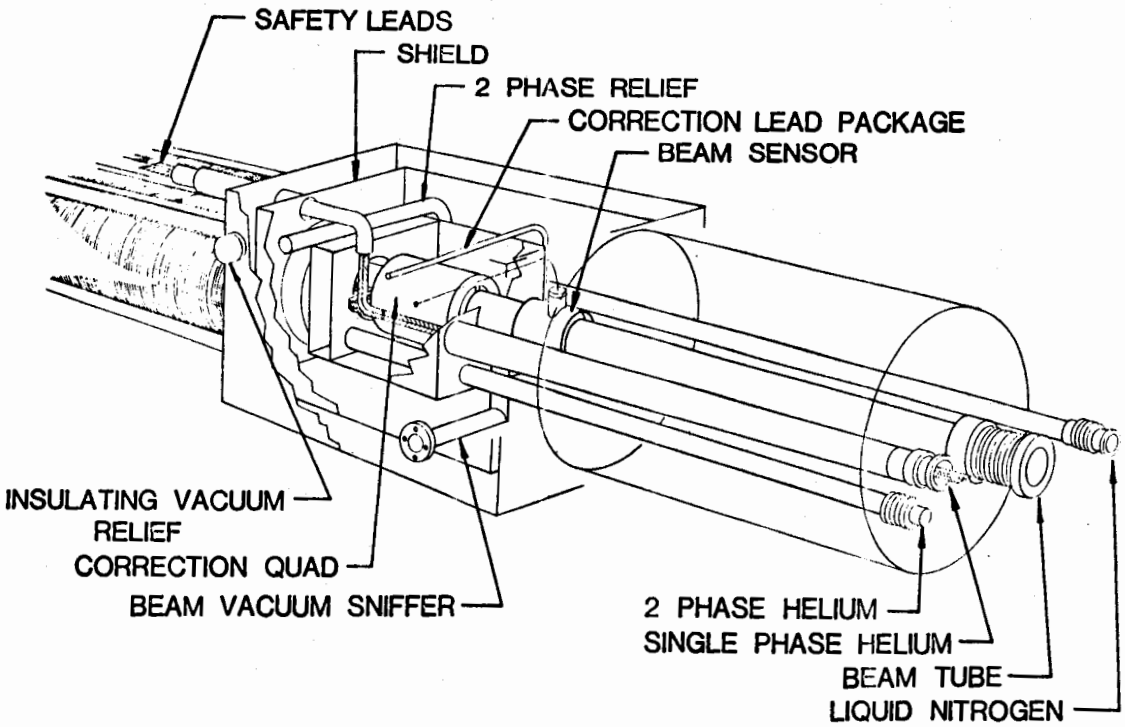

Fig. II-5 Quadrupole and correction-element assembly

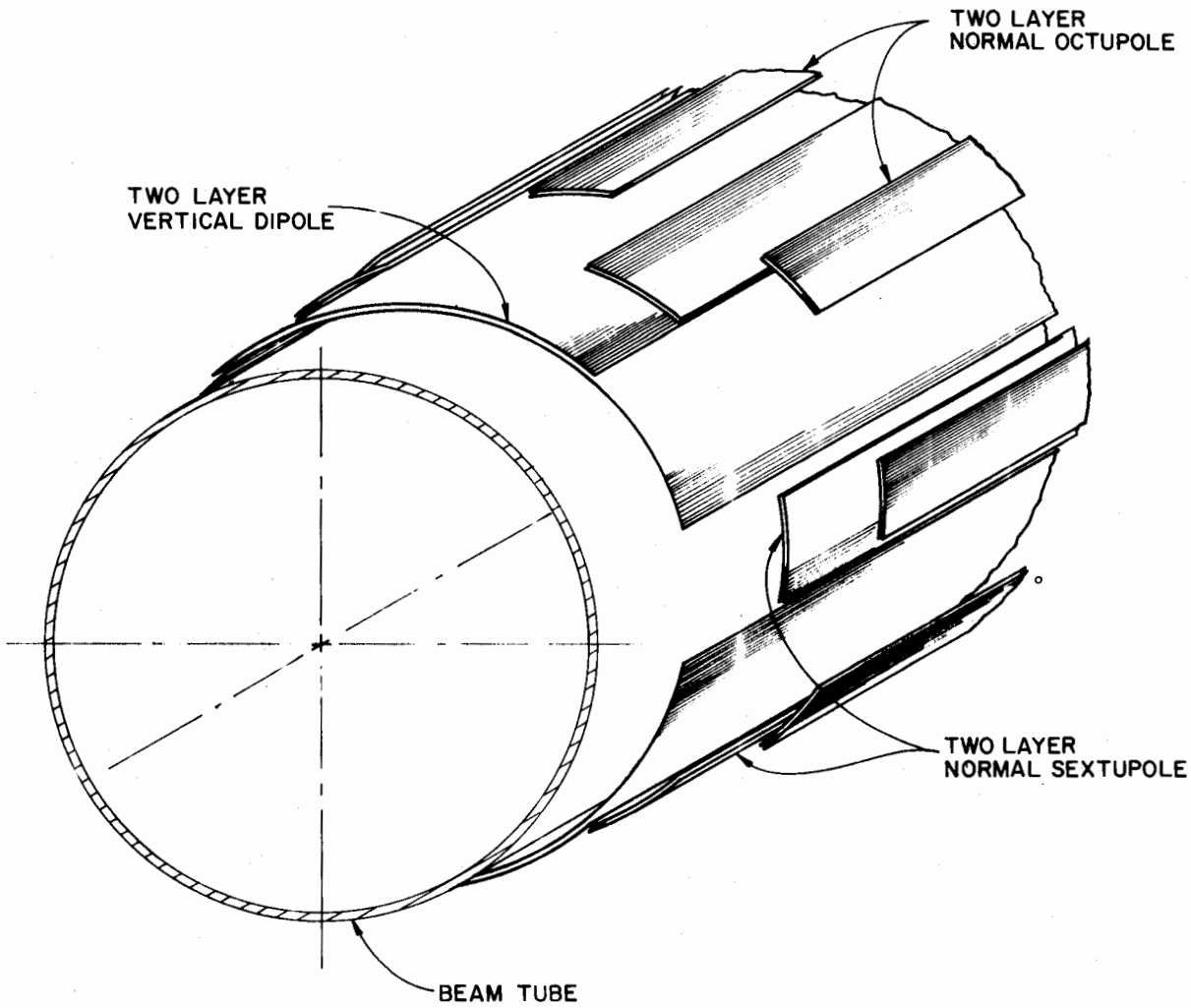

PEEL BACK VIEW OF CORRECTION WINDING
.015 DIA SUPERCONDUCTING WIRE

Fig. II-6 Correction-element details

service building above or of turn-around boxes at the end of a helium circuit. These additional features are shown below in Fig. II-8 (feed box) and Fig. II-9 (double turn-around box).

B. Refrigeration

The Energy-Saver ring will be divided into 48 magnet strings, each consisting, on the average, of 16 dipoles and 4 quadrupoles. Twenty-four satellite-refrigerators located symmetrically in Service Buildings around the ring and supplied by a Central Helium Liquefier are used to cool the magnets. Figure II-7 shows a model of a satellite refrigerator in a service building. Each satellite refrigerator will cool two strings of magnets extending approximately 400 feet each side of the refrigerator. Figure II-8 is a drawing of the feed box at 24 quad locations that brings power and cryogenic fluids to the magnets. Figure II-9 is a drawing of the turn-around box at 24 quad locations at the end of two helium circuits.

The magnets in one string will be cooled by sub-cooled one-phase liquid helium in a series circuit. In order that the temperature rise along the cooling circuit be kept at a minimum, the magnet vessel is surrounded by a return channel filled with boiling helium. A string of magnets between refrigerators is thus kept at a constant temperature. The demand for power around the ring is reduced from almost 10 MW with separate refrigerators to approximately 5 MW with the liquefier and satellite-refrigerator system. This system has been developed as part of the research and development program.

Tests of the system concepts have been carried out. The commissioning of a prototype satellite refrigerator, shown in Fig. II-10, is complete. Extensive tests have shown that this satellite refrigerator can satisfy the design performance (700 W at 4.5 K) and can be operated with the required reliability. Strings of several full-size magnets have been operated to verify the design concept of the cooling system. The building for the Central Helium Liquefier has been completed. Equipment has been

obtained from a surplus USAF liquid-oxygen plant in California and has been reconditioned and assembled at Fermilab. It will begin commissioning tests in the near future. A heat exchanger, cold box, and a control system for the Central Helium Liquefier containing heat exchangers and controls have been constructed, tested, and shipped to Fermilab. They are shown in Figs. II-11a, b, and c.

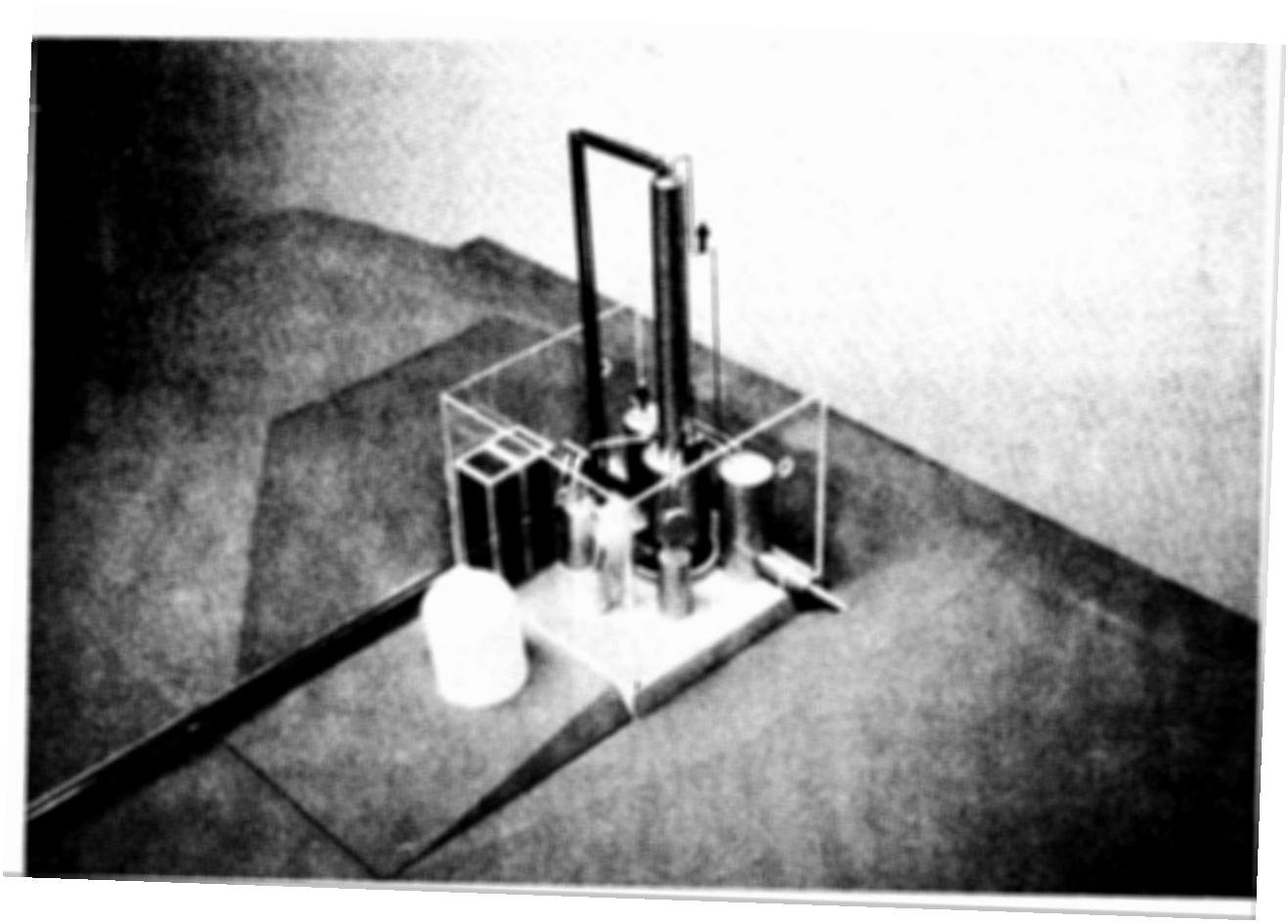

Fig. II-7 Model of a Satellite Refrigerator

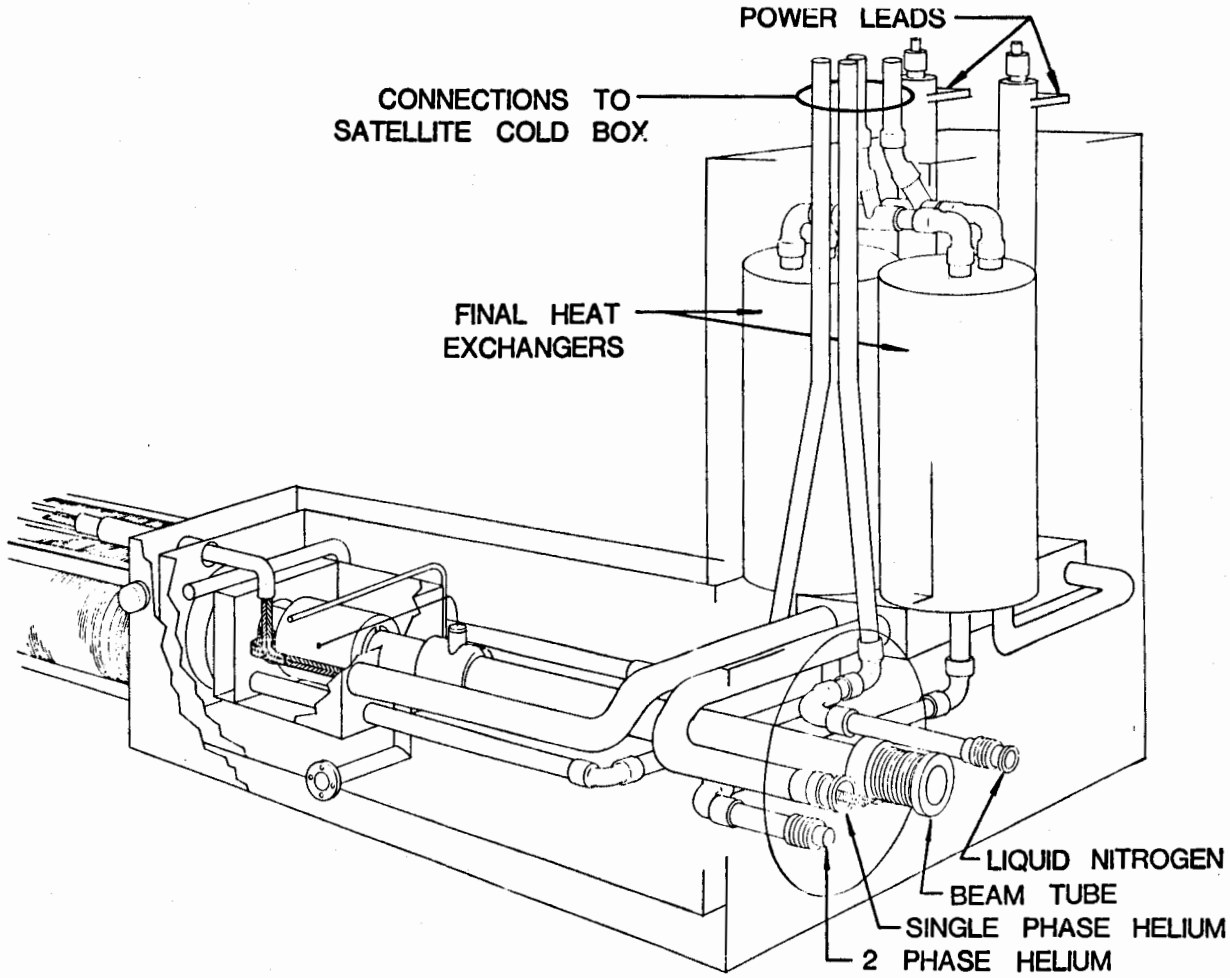

Fig. II-8 Feed box

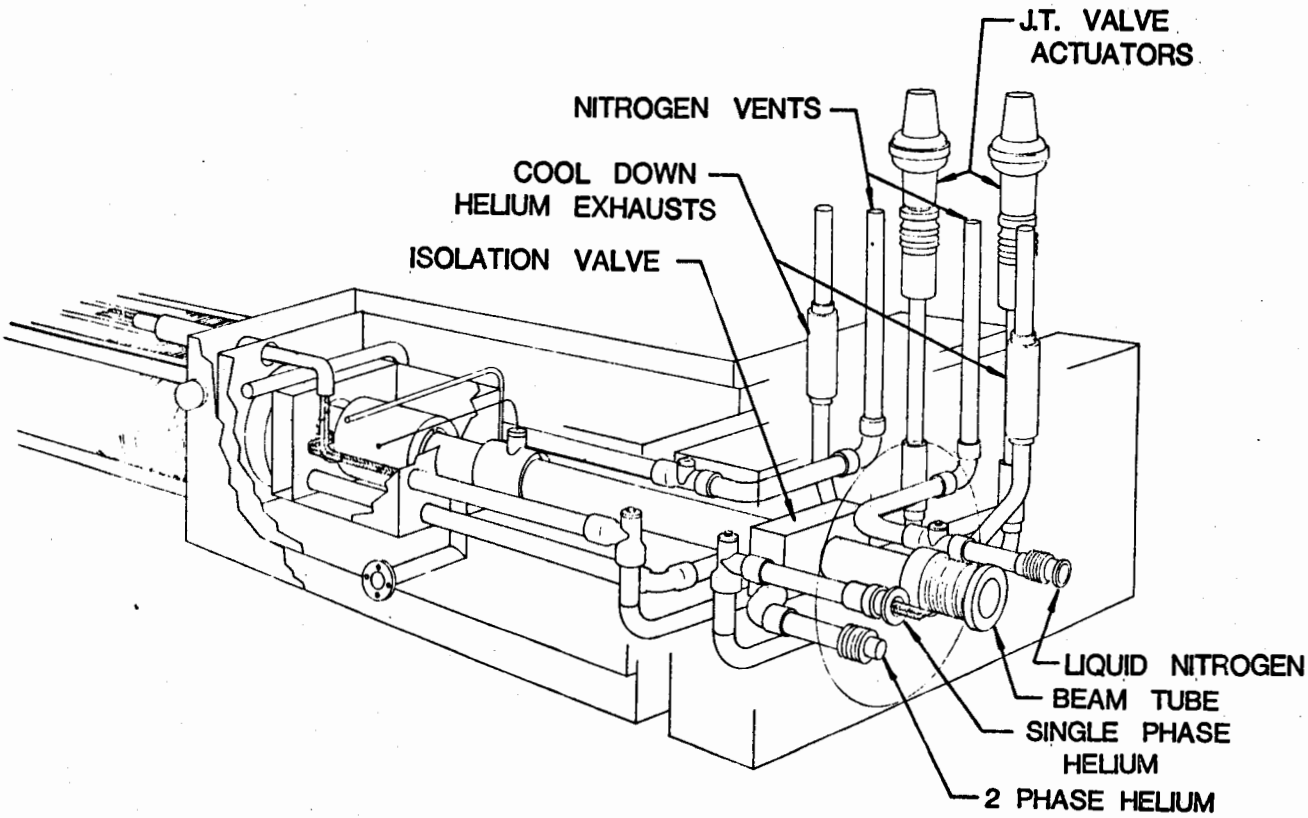

Fig. II-9 Double turn-around box

Fig. II-10 Prototype Satellite Refrigerator

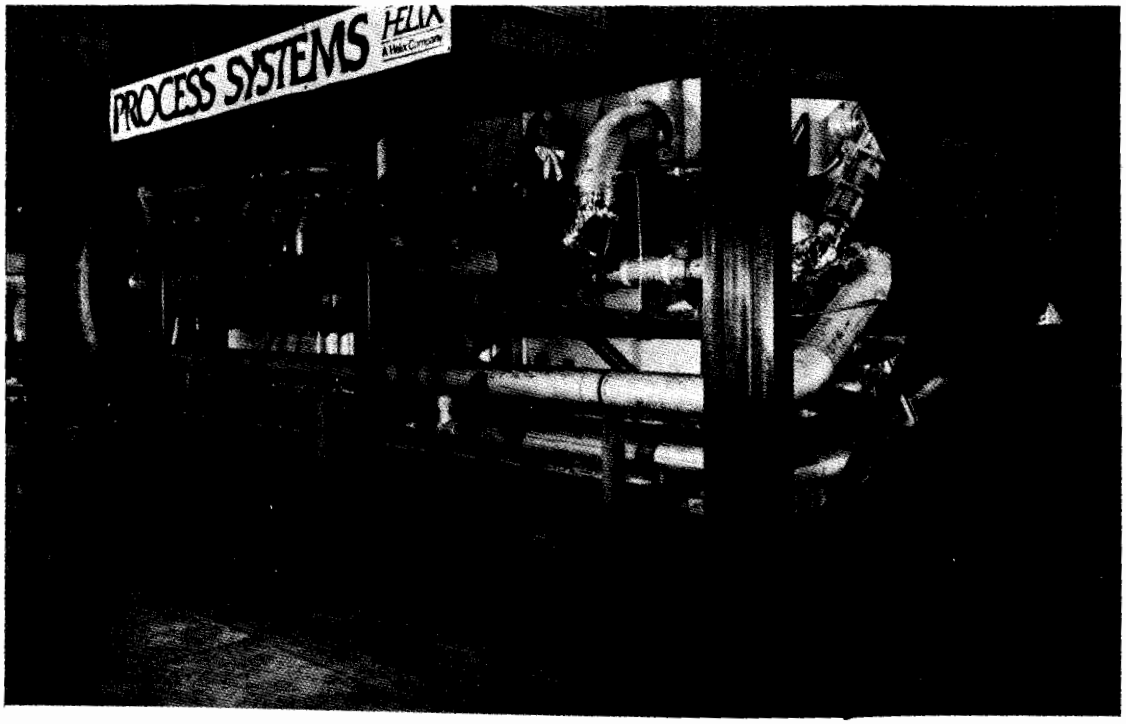

Fig. II-11a Central Helium Liquefier Cold Box - Open

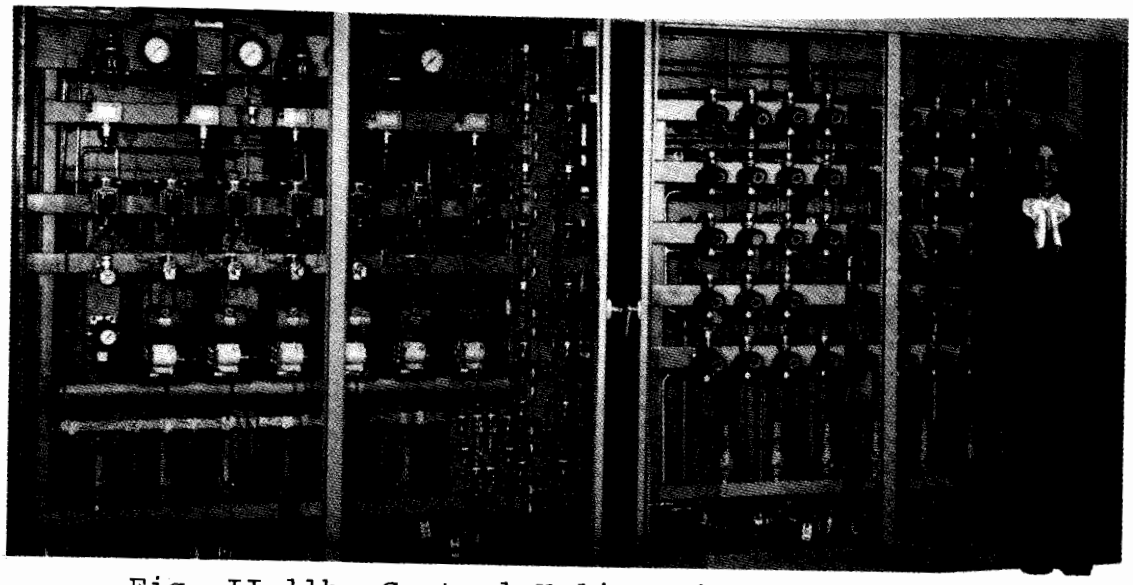

Fig. II-11b Central Helium Liquefier Controls

Fig. II-11c Central Helium Liquefier Cold Box - Ready for shipment

III. DESIGN OF THE ENERGY SAVER

A. Lattice

The lattice design of the Energy Saver Ring is tightly constrained by the fact that it must fit within the existing Main--Ring tunnel and must therefore follow very closely the bending of the Main Ring. At the same time, experience obtained in the operation of the Main Ring and in the development of superconducting magnets has made it possible to fit 22-ft dipoles into the longitudinal space under the 21-ft dipoles of the present Main Ring. A lattice incorporating these 22-ft dipoles has been designed. It is shown in Fig. III-1. Except in the long straight sections, bending centers are superimposed so that the Energy-Saver beam lies directly below the Main-Ring beam. In the long straight sections, the Saver beam is parallel to and slightly outside (0.392 in.) the Main Ring beam. Nothing in the Saver ring intrudes into the clear drift space directly below the drift space of the Main-Ring long straight section. An extra space of 12 in. just outside this clear region is provided for the Saver "warm-up" box, which makes the transition from 4 K to room temperature. This Saver lattice is matched at a tune of 19.4.

There are six long straight sections, just as in the Main Ring. It is planned to utilize them as follows:

Straight Section A.	Beam transfer from Main Ring to Energy Saver and extraction to External Experimental Areas
Straight Section C.	Internal-Target Area
Straight Section D.	Beam-abort Area
Straight Section F.	RF Acceleration System

Straight Sections B and E are available for future use, possibly as colliding beams experimental areas.

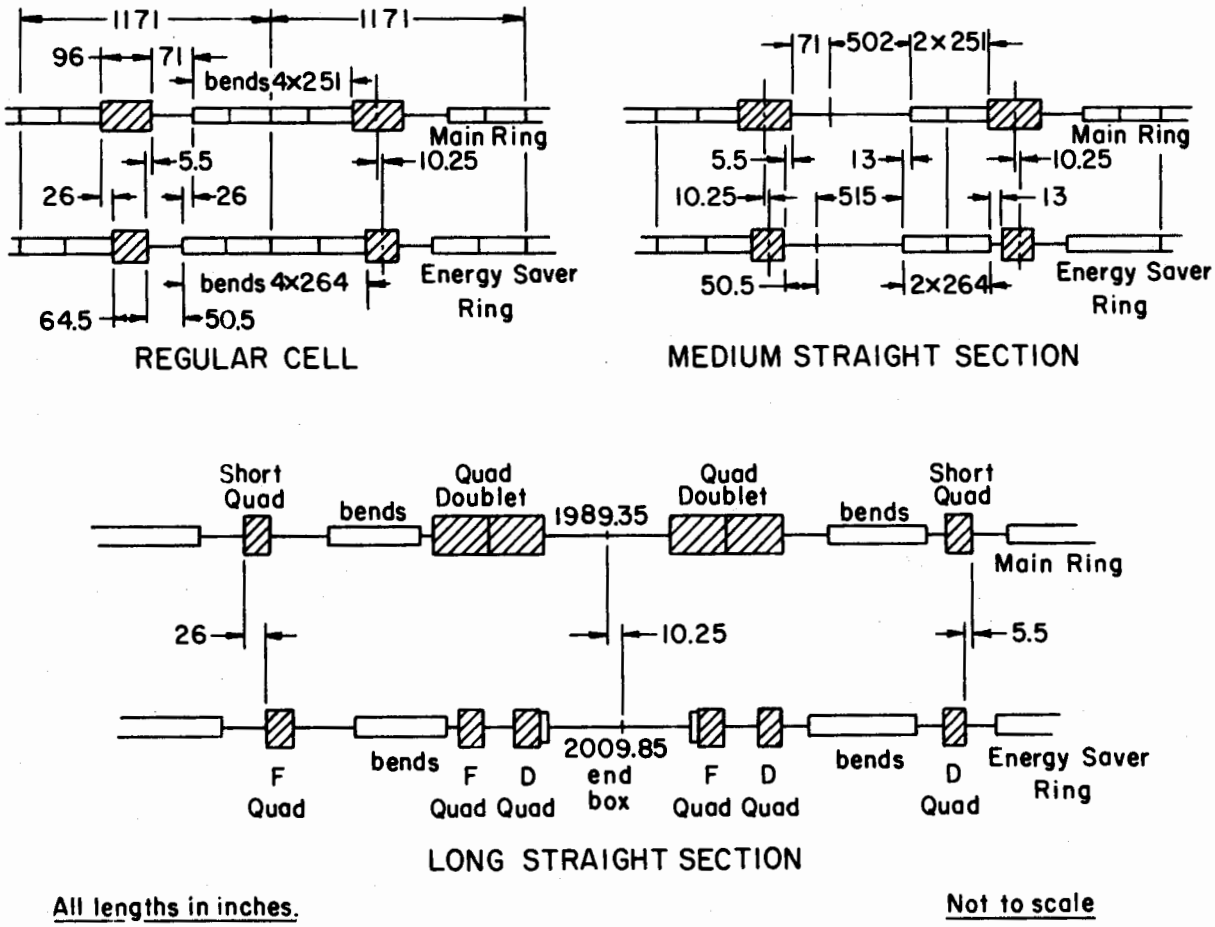

Fig. III-1 Lattice of the Energy Saver Ring

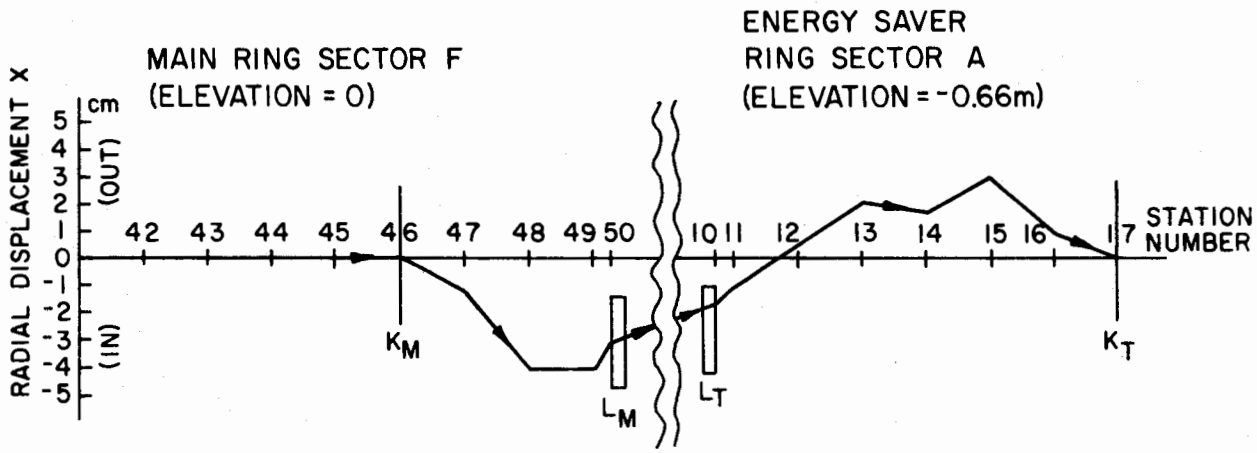

Fig. III-2 Main Ring to Energy Saver Ring beam transfer system

B. Beam-Transfer System

The proton beam in the Main Ring is extracted, transported down to the Energy-Saver elevation and injected into the Saver in long straight-section A. A schematic plan of this system is shown in Fig. III-2. The orbits in the two rings are separated vertically by 26 in. (0.66 m). The beam can be transferred at any momentum up to 100 GeV/c.

Sequentially in the direction of the beam, the 100-GeV/c beam in the Main Ring is first kicked radially inward by a kicker magnet K_M across the iron septum of a Lambertson septum magnet L_M approximately one-fourth of a horizontal betatron oscillation downstream. The septum magnet L_M deflects the beam downward toward a similar septum magnet L_T in the Saver ring that deflects the beam back to the horizontal plane. Both L_M and L_T are located in long straight-section A, near the upstream and downstream ends respectively. The two septum magnets are also rolled slightly about the beam axis to produce a small horizontal double bend in addition to the vertical dog-leg, so that the beam will enter the Saver ring in the horizontal plane at the proper horizontal displacement and angle to intersect the ring orbit approximately three-fourths of a betatron oscillation downstream of L_T. At the intersection point, a horizontal kicker magnet K_T will kick the beam onto the Saver ring orbit. The parameters of the transport elements are given in Table III-I for a transfer momentum of 100 GeV/c, and the layout and geometry are given in Table III-II.

At present there are interferences between these magnet elements for beam transfer and equipment already installed in the Main Ring at F46, F50, and A13. These interferences can all be resolved by slight modifications of the Main-Ring equipment. It would be possible to avoid all interferences by simply locating the beam-transfer systems in an unoccupied long straight section, such as E, but is is more desirable to locate the system in straight section A close to the central control room so that all control cables are kept as short as possible and all beam-

Table III-I. Beam-Transfer System Parameters

Kicker Magnets	K_M	K_T	
Length	1	1	m
Peak Field	1.5	1.0	kG
Kick Angle (h)	0.45	0.30	mrad
Rise Time	0.2	0.2	μsec
Aperture (v x h)	4x6	3x5	cm^2
Location	F46(MR)	A17(ES)	
Construction	Terminated ferrite-core window frame		

Lambertson Magnets L_M and L_T		
Length (6 sections)	6	m
Field	8.33	kG
Bend Angle (v)	15	mrad
Aperture	2x2	cm^2

	L_M	L_T
Location	F50(MR)	A10(ES)
Construction	Conventional dc iron septum magnet	

Table III-II. Beam-Transfer Layout and Geometry

	Upstream of L_M	Downstream of L_T	
Location	F50(MR)	A10(E5)	mm
Horiz. Displace (x)	-31.0	-19.3	mm
Horiz. Angle (θ_x)	-0.086	0.025	mrad
Vert. Displace (y)	0 (MR level)	-0.66 (E5 level)	m
Vert. Angle (θ_y)	0	0	

transfer equipment is quickly accessible to the operators for easy tune-up and maintenance.

In the Energy-Saver Ring, the medium straight section at A17 will be made warm-bore to accommodate the injection kicker K_T.

C. Beam Dynamics and Aperture Considerations

1. Magnetic-field corrections. The Energy-Saver Ring has a magnet lattice almost identical to that of the Main Ring and the beam-dynamical effects arising from constructional errors are therefore the same for the two accelerators and have thus already been determined (see Section 4.4 of the 1968 NAL Design Report). Furthermore, the tuning and operating experience gained from the Main Ring is applicable in detail to the Saver Ring. Finding and improving the closed orbit with a properly instrumented beam-position monitoring system is a well-understood problem. Given good magnetic-measurement data, a careful survey, and reliable means for beam steering, it is likely that a circulating beam can be obtained without difficulty, insofar as effects due to magnetic-length and placement errors are concerned.

Harmonic multipole errors excite resonances. Low-order resonances cause excessive growth in beam size and must be avoided. But, provided that the field qualities of the magnets in the Saver Ring are equal to those already measured, the widths of these resonances caused by harmonic errors are narrow. With proper regulation of the power supplies, these resonances can be avoided. This is especially true with a superconducting magnet system for which the response of the field to power-supply ripple is small and slow.

The chromaticity, the variation of betatron tune with momentum, must be adjusted to ensure that the ring has a reasonably large momentum aperture. The natural kinematic chromaticity of the ring is $\frac{\Delta\nu}{\Delta p/p} \approx -22$. To first order, ignoring space-charge instability problems, this chromaticity should be made zero, but Landau damping of coherent space-charge instabilities introduces other requirements on chromaticity. An average sextupole field

is provided by the trim-magnet packages located in the ministraight sections to adjust chromaticity to the desired value. Higher-order dependences of ν on $(\Delta p/p)^2$, $(\Delta p/p)^3$, etc., can be corrected by higher-order average multipoles, but in all likelihood these corrections will not be necessary. Dependence of tune on amplitude limits the betatron aperture of the ring. This dependence is compensated by average octupole fields also produced by the trim-magnet packages.

2. Aperture. The most severe aperture requirement is imposed by the operation of an efficient slow beam-extraction system. In a resonant-extraction system, the aperture has to be large enough in the extraction plane to permit an unstable betatron oscillation of sufficient amplitude to develop so that the amplitude-dependent step size becomes sufficiently large to jump across an extraction septum with high efficiency. The half-integer resonant extraction system currently in use in the Main Ring takes approximately 2 in. of aperture for the unstable betatron oscillation to build up and another 0.75 in. (step size 0.375 in.) to accommodate the stepped-over beam that enters the septum aperture at the proper phase of oscillation. At present, the extraction efficiency is close to 99% on a long-term average and is limited by the effective thickness of the electrostatic septum.

For a superconducting magnet ring with negligible field ripple, it is more advantageous to employ a third-integer scheme. In this scheme, the stable betatron amplitude is not enlarged near resonance, as in the half-integer scheme, so that more of the available aperture can be used for the buildup of unstable betatron amplitude. Moreover, the step size is the accumulation of the amplitude growth in three turns instead of two. Thus one can obtain larger step size for the same available aperture or the same step size with a smaller total aperture. The slow-extraction system for the Energy Saver described in Section E below requires a horizontal good-field aperture of 1.6 in. With corrections provided by the trim-magnet packages, this good-field aperture can be obtained.

3. Space-charge effects. The incoherent space-charge tune shift for a beam intensity of 5×10^{13} protons per pulse is negligible at energies above 100 GeV.

Intensity-dependent collective effects in the Saver Ring can be estimated by scaling from knowledge of the same effects in the Main Ring. We can expect longitudinal as well as transverse coherent instabilities to occur in the same manner as they do there.

Longitudinally, the tolerable impedance in the Main Ring is given by $Z/n \sim 10\Omega$, where n is the mode number. The major contribution to this coupling impedance comes from parasitic modes in the rf cavities. This instability was cured after these parasitic modes were properly damped and the inactive cavities were properly shorted on the flattop. Similar precautions will be taken in the design of the Energy-Saver rf cavities. In addition, a wide-band longitudinal feedback damper may be necessary for the full intensity of 5×10^{13} protons per pulse. There is such a damper already in use in the Main Ring.

Transverse coherent instabilities in the Saver Ring can be cured in the same manner as in the Main Ring by using a wide-band feedback damper. This technology is well-developed and straightforward. In addition to the damper, which will take care of the lower modes, the chromaticity of the lattice must be adjusted by the trim sextupoles to small positive values throughout the acceleration cycle to ensure stability of the higher head-tail modes.

D. RF System

As an accelerator, the Energy Saver should be capable of being operated at a wide range of ramp rates to satisfy the requirements of a variety of physics experiments. The rf system is designed to have the capability of accelerating 5×10^{13} protons at rates up to 50 GeV/sec. With a revolution period of 21 μsec, this corresponds to an energy gain of 1.05 MeV/turn and a power to the beam of 400 kW. At the maximum rate of 50 GeV/sec, it will take 8 sec to accelerate the beam from 100 GeV to 500 GeV. A magnet ramp consisting of 8 sec up, 8 sec flattop, and 8 sec down will yield a

cycle time of 24 sec. With this cycle time, the desired average beam intensity of 10^{12} per sec as specified in the design principles can be reached with only 2.4×10^{13} protons per pulse, already obtained in the Main Ring. For internal-target experiments the beam can be accelerated to 1 TeV in 18 sec. Depending on the experiment, the 1-TeV beam can be stored on the 42-kG flattop for as long as desired.

To obtain near 100% efficiency in rf capture of the beam injected into the Energy Saver, we will use synchronous capture. The orbit length and the accelerating frequency of the Energy Saver are therefore made identical to those of the Main Ring.

With a harmonic number of 1113, a synchronous phase angle of 60° and a ramp slope of 50 GeV/sec, the rf system must develop 1.2 MV. This will provide a bucket area of 0.2 eV-sec, adequate to contain the beam-bunch longitudinal emittance of 0.1 eV-sec. To match the shape of the Main-Ring beam bunches to that of the Energy-Saver buckets, the Main-Ring ramp rate will be reduced to 50 GeV/sec and its rf voltage reduced adiabatically to 1.2 MV prior to beam transfer.

The required 1.2 MV is to be developed by four accelerating cavities, each developing 300 kV and delivering 100 kW to the beam. These cavities will be slightly modified versions of exiting Main-Ring cavities. Because of the very small tuning range required of the cavities, about 2.3 kHz between 100 GeV and 1000 GeV, the existing Main-Ring tuners can be removed from the cavities and replaced by very small tuners. The quality factor Q of a Main-Ring cavity with its tuners removed is approximately 8000 and its gap shunt resistance is 840 kΩ. Consequently each cavity will dissipate

$$P_{cav} = \frac{V^2_{gap}}{2\ R_{sh}} = \frac{9 \times 10^{10}}{1.7 \times 10^{6}} = 53\ \text{kW}.$$

Each cavity must therefore be supplied with 153 kW of rf power.

The modified cavity-power-amplifier combination must be mounted so that the Main-Ring beam pipe can pass directly above it. In order to accomplish this with a minimum of enclosure modification, the cavities can be rotated by 45° about an axis along the beam and new power amplifiers fitted to the existing flanges. The final amplifier tubes must be mounted vertically and the input power-coupling system will therefore have to be extended slightly. This extension would cause complications in the self-resonance of the input coupling system if the present 4CW100000 (Fermilab designation Y567) tubes were to be used. This problem will be resolved by replacing the single power amplifiers presently used by two power amplifiers using 4CW50000 tubes. The slightly smaller output capacitance of these tubes will compensate for extension of the coupling system. This modification is shown in Fig. III-3. Main-Ring cavities already have two mounting flanges upon which the two amplifiers can be mounted. The total anode-dissipation capability of 100 kW will require that the two tubes develop the required 153 kW of rf power with an efficiency of 61%, well within existing design capability. Power dissipation in the cavities will be raised from the present design level of 33 kW to 53 kW, necessitating some modification of cavity cooling and a slight increase in the cooling-water requirement for the combined Main Ring and Energy Saver rf systems.

The low-level rf-control system and power-amplifier excitation system are simple extensions of existing Main-Ring systems. During beam transfer, the Main Ring and the Energy Saver rf systems will be phase-locked to each other. Such a system is presently employed for beam transfer from the Booster into the Main Ring at 8 GeV and the technology is well developed.

E. Beam-Extraction System

Both slow and fast modes of beam extraction are required to optimize the use of the Energy Saver for physics experiments. The extracted beam will be transported to the existing Main-Ring External Beam Line and Switchyard.

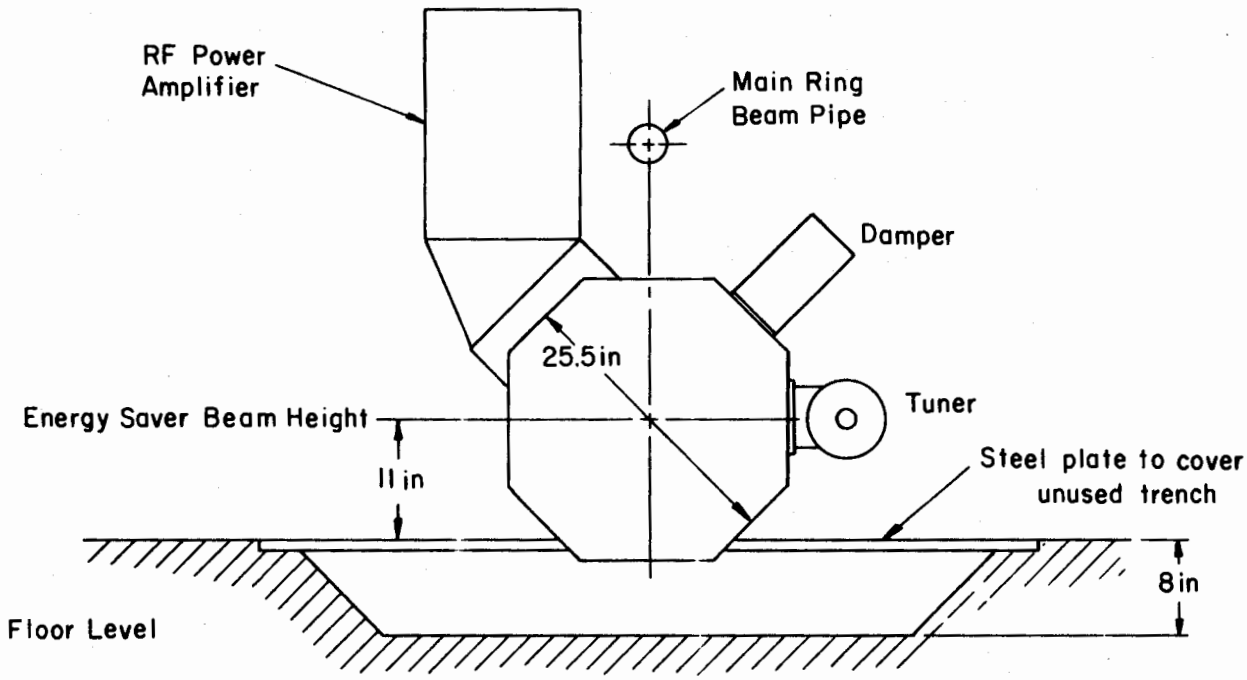

Note: Cavity support not shown.

Fig. III-3 Energy Saver RF cavity

1. Slow extraction. The horizontal third-integer resonant-extraction scheme operating at ν = 19-1/3 will be used for slow extraction. In this scheme, the horizontal width of the beam is resonantly excited by a sextupole magnet to grow at an increasing rate. The outer part of the beam then steps across an electrostatic wire septum and is deflected further outward by the septum to enter an extraction channel, which begins at location F50. The electrostatic septum is located at F10 and positioned so that the septum is 2 cm radially outward from the central orbit. The sextupole is also placed in long straight section F, 30° in horizontal betatron phase upstream of the electrostatic septum. With a sextupole strength of $B''\ell = 1.2 \times 10^4$ kG/m at 500 GeV and a betatron tune of ν = 19-1/3, the beam half-width at the septum will step from 2.0 cm to 2.9 cm in three turns, when the particles return to the same phase. The 9-mm wide part of the beam that is inside the aperture of the electrostatic septum is deflected radially outward 0.06 mrad by the septum. As it arrives at F50, the entrance to the extraction channel, deflected beam will be 4.2 mm wide and separated from the undeflected part of the beam by a gap of 3.2 mm. This separation is adequate to clear the iron septum of the Lambertson magnet that is the first element of the extraction channel. The part of the beam passing just outside the channel aperture will continue to circulate around the ring and be extracted three turns later. The largest beam excursion is 31 mm and occurs only in the ring quadrupole immediately downstream of F10. The horizontal half-aperture on the mid-plane of the vacuum chamber is 1.4 in. = 35.6 mm and is thus adequate. Note that the good-field region does not have to extend out to 31 mm for this beam, which is on the way out of the ring in less than one sector anyway.

During extraction, the horizontal betatron tune is shifted from 19.4 to 19-1/3 by a conventional extraction quadrupole placed at the proper betatron phase relative to the electrostatic septum. This system can also be employed for the medium-fast extraction (coherent extraction) in the same manner as is done on the Main

Ring. With a step size of 9 mm and an effective electrostatic-septum thickness of 0.1 mm, the slow extraction efficiency should be close to 99%.

2. Fast extraction. Fast (single-turn) extraction is accomplished simply by a fast kicker magnet located in the medium straight section at E17. The kicker kicks the beam by 0.09 mrad, thereby displacing the beam at the entrance to the extraction channel by 6 mm, adequate to clear the channel septum. For both fast and slow extraction, angle and position bump magnets must be installed upstream and downstream of long straight section A to place the beam immediately next to the channel septum before the fast kicker is fired. The fast-extraction efficiency should be very close to 100%.

3. Extraction channel. The extraction channel is shown in Fig. III-4. Beginning at F50, the first elements are sections of Lambertson iron-septum magnets totalling 20 m in length and deflecting the beam vertically downward by 6 mrad. The beam is initially deflected downward instead of upward in order to avoid interference with the Main-Ring to Energy-Saver beam-transfer system, which has beam pipes and transport elements crisscrossing the region between the Main-Ring and Saver orbits. The beam is 12 cm below the Saver orbit at a distance of 10 m downstream of the exit from the Lambertson magnets. This separation is large enough for the extracted beam to enter a small-aperture, high-field superconducting dipole. Two chains of these dipoles, each positioned at a proper skew angle with respect to the normal horizontal and vertical axes, are needed to impart the proper two-dimensional displacement and angle to the beam to make it enter the existing external proton beam line some 75 m beyond A0. These dipoles are far enough downstream from all the septa so that there is no danger of their being sprayed by stray beam. Superconducting quadrupoles will be installed in the transport line between the 2 chains of dipoles to produce the desired beam optics.

Parameters of the entire beam-extraction system are given in Table III-III below for 500 GeV.

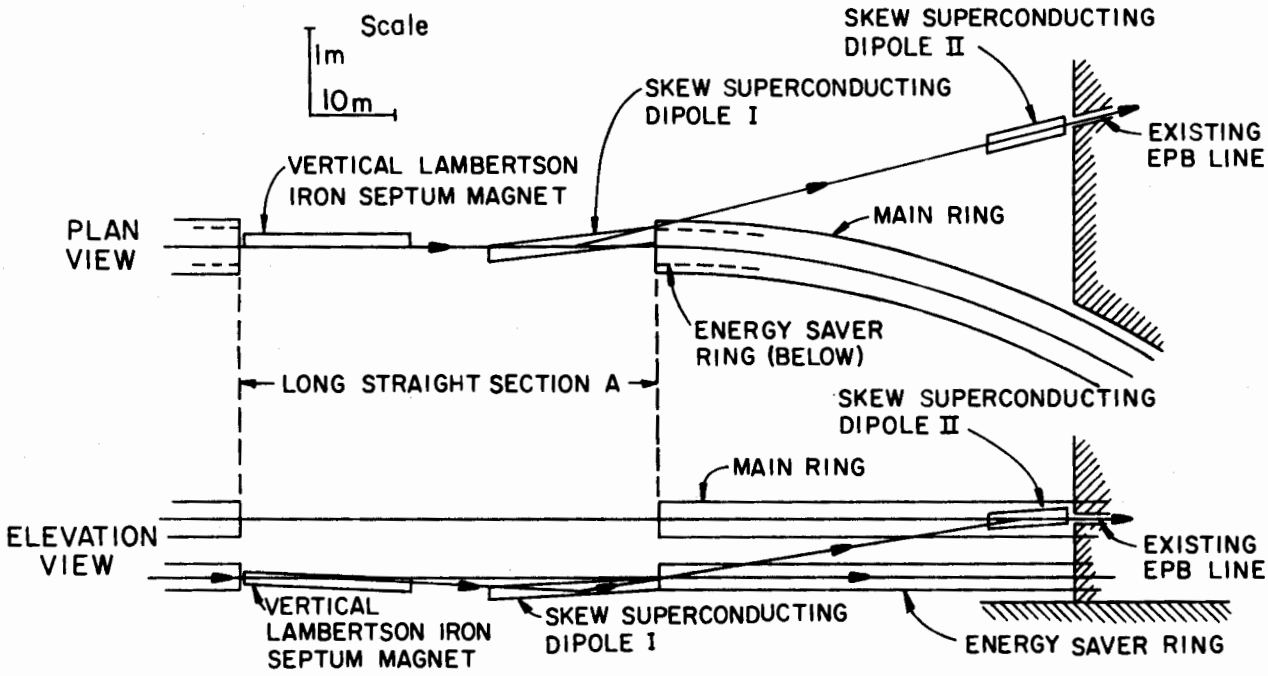

Fig. III-4 Extraction channel to experimental areas

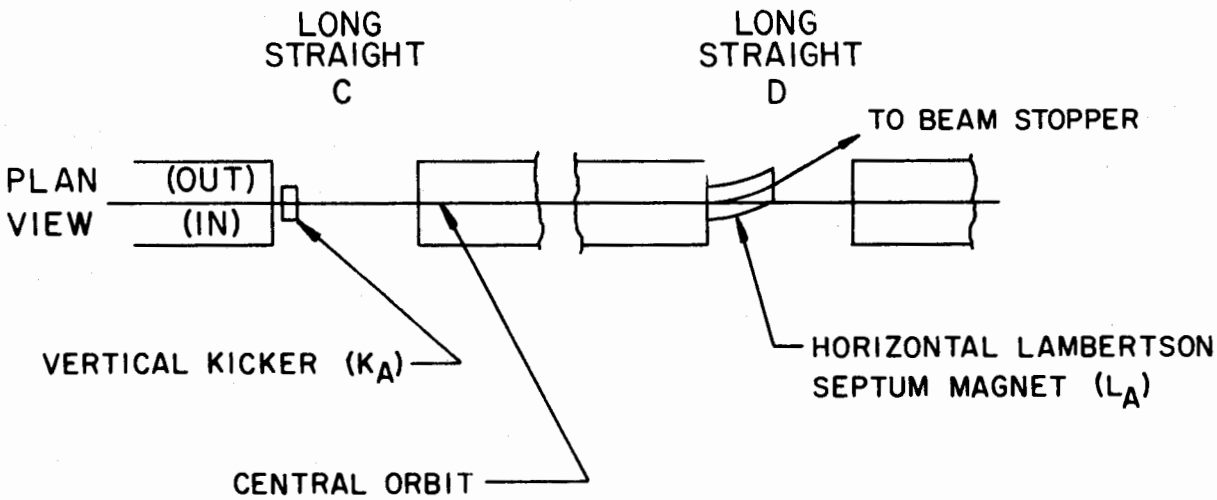

Fig. III-5 Energy Saver beam-abort system

Table III-III. Beam-Extraction System Parameters

Slow Extraction	
Sextupole	
Length	1 m
Strength B''	1.2×10^4 kG/m^2
Location	long straight section F, 30° horizontal phase upstream of entrance to electrostatic septum
Electrostatic Wire Septum	
Length	3 m
Field	100 kV/cm
Deflection Angle	0.06 mrad
Location	F10, septum is 2 cm radially outward from central orbit
Construction	array of 0.05 mm diameter wires with 1 mm spacing
Effective Thickness	<0.1 mm
Beam Characteristics	
Resonance	$\nu_x = 19\text{-}1/3$
Step Size at Entrance to wire septum	9 mm
optics at entrance to wire septum	$x'/x = 0.01$ m^{-1} (diverging)
Horizontal Width at F50	4.2 mm (x = 12.5 mm to 16.7 mm)
Optics at F50	$(x'/x) = 0.008$ m^{-1} (converging)
Separation from Undeflected Beam	3.2 mm
Fast Extraction	
Kicker Magnet	
Length	3 m (in 3 sections)
Peak Field	0.5 kG
Kick Angle	0.09 mrad
Location	E17 (medium straight section E)
Beam Characteristics	
Horizontal Betatron Phase to F50	5.75 (2π)
Beam Displacement at F50	6 mm

Extraction Channel

Lambertson Iron-Septum Magnet

Length	20 m (in 10 sections)
Field	5 kG
Bend Angle	6 mrad (downward)
Location of Bend Center	15 m upstream of A0
Septum Position	11 mm radially outward from central orbit

Superconducting Dipole I

Length	20 m (in 5 sections)
Field	27 kG
Bend Angle	32.4 mrad
Direction of Bend	up and out, 48.9° to vertical
Location of Bend Center	15 m downstream of A0
"Good Field" aperture radius	1 cm

Superconducting Dipole II

Length	9.54 m (in 2 sections)
Field	27 kG
Bend Angle	15.5 mrad
Direction of Bend	down and in, 8.93° to vertical
Location of Bend Center	5 m in front of entrance to EPB line (70 m from A0)
"Good Field" Aperture Radius	1 cm

F. Beam-Abort System

In a superconducting magnet ring, a fast, high-efficiency beam-abort protective system is essential. One must be able to eject the beam rapidly and bury it in a beam stopper in case of component failure or when desired for other reasons. If stray particles, either primary or secondary, are allowed to strike the superconducting magnets, heating by these particles in the magnet coils may cause the coils to quench.

The most efficient and reliable beam-abort system is, in essence, a simple fast beam-extraction system. The system we have designed is shown schematically in Fig. III-5.

To abort the circulating beam, it is kicked downward by a fast kicker K_A located at B50 in long straight section C. The vertical oscillation induced will displace the beam downward at

location C50 in long straight section D across an iron-septum Lambertson magnet L_A. The Lambertson magnet will deflect the beam radially outward to clear the ring quadrupole at D10 and enter a beam stopper buried in the wall of the tunnel. At B50 and C50, the vertical β-function has its maximum value of approximately 120 m, and with a betatron tune of $\nu = 19.4$, these two locations are separated by $2\pi(3.23)$ in betatron phase. Thus a kick at B50 of 0.18 mrad will result in a displacement at C50 of 2.15 cm, adequate to clear the septum. The septum magnet L_A is composed of a chain of ten sections of dc Lambertson magnets and deflects the beam radially outward by an angle of 6.0 mrad, which will bring the beam far enough out at D10 to clear the ring quadrupole. The beam will enter the tunnel wall just upstream of the first dipole after D11, where the beam stopper is buried. If desired, it is of course possible to bend the beam downward after it clears the ring using additional dipoles and direct it into a stopper buried in the floor of the tunnel. The parameters of the kicker and the septum magnets are given in Table III-IV below for 1 TeV, since it is expected that the Energy Saver will be used for internal-target experiments up to 1 TeV energy.

With a revolution time of 21 μsec, a kicker rise time of 0.2 μsec, a beam displacement at the septum of 21.5 mm, and a septum thickness of 2 mm, the fraction of beam hitting the septum is

$$\frac{0.2\ \mu\text{sec}}{21\ \mu\text{sec}} \times \frac{2\ \text{mm}}{21.5\ \text{mm}} = 0.09\%.$$

The efficiency of the abort system is thus better than 99.9%.

The present Main-Ring beam abort system is in long straight section D, making this area somewhat radioactive. By aborting the Saver-Ring beam in this same area, we limit the radioactivity to one long straight section and leave all other straight sections cool. The kicker magnets placed at the ends of long straight section C are only 4 m long and should not handicap the utility of this straight section for internal target experiments.

Table III-IV. Beam-Abort Magnet Parameters

Kicker Magnet K_A		
Length (4 sections)	4	m
Peak Field	1.5	kG
Kick Angle	0.18 (vertically down)	mrad
Rise Time	0.2	μsec
Aperture (v x h)	4 x 6	cm^2
Location	B50	
Construction	terminated ferrite-core window frame	
Lambertson Magnet L_A		
Length (10 sections)	20	m
Peak Field	10	kG
Bend Angle	6.0 (radially out)	mrad
Aperture (v x h)	2 x 4	cm^2
Septum Thickness	2	mm
Location	C50	
Construction	conventional dc iron-septum magnet	
Beam Stopper		
Construction	Steel cylinder with Al core inserted from front	
Al core diameter	0.1	m
length	1.5	m
Steel cylinder diameter	1	m
length	3	m
Geometry of Aborting Beam		
Angle kicked by Kicker K_A	0.18 (vertically down)	mrad
Displacement at entrance to septum magnet L_A	2.15 (vertically down)	cm
Angle at entrance to L_A	-0.20 (vertically down)	mrad
Bending angle of L_A	6.0 (radially out)	mrad
Displacement at ring quadrupole downstream of L_A	24 (9.4) (radially out)	cm

G. Vacuum System

The decision to use cold bore makes it convenient to use cryosorption pumping where the beam pipe is cold. These pumps can have a high pumping speed and capacity for both helium and hydrogen and can be built into the cryostat. It is planned to locate cryosorption pumps at warm-cold interfaces. Although more frequent pumps are possible, this arrangement should be more than adequate, provided there are no helium leaks into the vacuum pipe directly from the liquid helium circuit of the cryostat. We have tested this system in the last year with good results. The system can indeed be made leak-tight.

In the absence of leaks from the liquid He circuit, the pumps are required to handle only the outgassing of the beam pipe and the leaks from the rough insulating vacuum (10^{-4} to 10^{-5} Torr) regions into the pipe. Our tests have shown that hydrogen desorption from the beam-pipe wall is the largest problem. The beam pipe will be chemically cleaned, vacuum baked, and stored in dry nitrogen before installation. With this treatment, outgassing rates at room temperature of hydrogen from stainless steel can be reduced to less than 10^{-12} Torr-liter/cm^2/sec. At 4.6 K, the outgassing rate should be many orders of magnitude less.

The other problem is small leaks from the rough insulating vacuum into the bore pipe. A string of magnets will be leak-checked when warm and with the pressure in the insulating region at one atmosphere or more. This sets a limit on leaks of $Q_{leak} \leq 10^{-9}$ atm-cc/sec. Sensitive regions, such as bellows and feedthroughs, can be cold-shocked to liquid-nitrogen temperatures during the leak-detection procedure. With this precaution, we estimate that the vacuum in the beam pipe can easily be maintained at better than 10^{-8} Torr, more than adequate for the Energy Saver operation.

The warm long straight sections will be pumped by titanium getter-ion pumps. These regions can be baked <u>in situ</u> if necessary. At the end of each cryogenic circuit, halfway between service

buildings, there is a short (1 m) region for Joule-Thompson valves. This location will allow for a warm-cold interface. There will also be a fast-acting vacuum valve to isolate the vacuum in the beam pipes to either side.

Cold bore has the added advantage of giving maximum use of the magnet aperture. Although the field quality close to the coil is not good enough for stable containment of the beam, this space may still be used for injection and extraction of the beam. The disadvantage of a cold-bore system is the lack of access to the beam pipe. Thus all warm beam-manipulating devices are designed to be located in long and medium straight sections where warm beam pipes are inserted through the use of warm-cold transition sections.

H. Refrigeration System

The decision was made early in the development to cool the magnets with one-phase helium and to utilize the magnet ring itself as the helium-transfer line. In addition, we have developed the design of a cryogenic system utilizing a central helium liquefier and 24 satellite refrigerators. The system is shown in schematic form in Fig. III-6.

1. Central liquefier. The use of a central plant gives high efficiency and consequent power saving, as well as redundancy and ease of maintenance. The plant we have obtained, partly from USAF surplus, consists of three large compressors, a helium reliquefier, and a nitrogen reliquefier. Our plan is to use two of the compressors for liquid-helium instead of liquid-air service (as they were previously intended), which will necessitate operating them at one-half their rated horsepower. The other compressor, providing flow for the nitrogen reliquefier, will run at nearly full power. Under these conditions, the design output of the plant is approximately 1,300 lb/hr (5,000 ℓ/hr) of liquid helium with both compressors running. The design out put of the nitrogen reliquefier is 5,000 lb/hr (2,800 ℓ/hr) of liquid nitrogen. The current plan is for the central helium liquefier to be operational in the Spring of 1978.

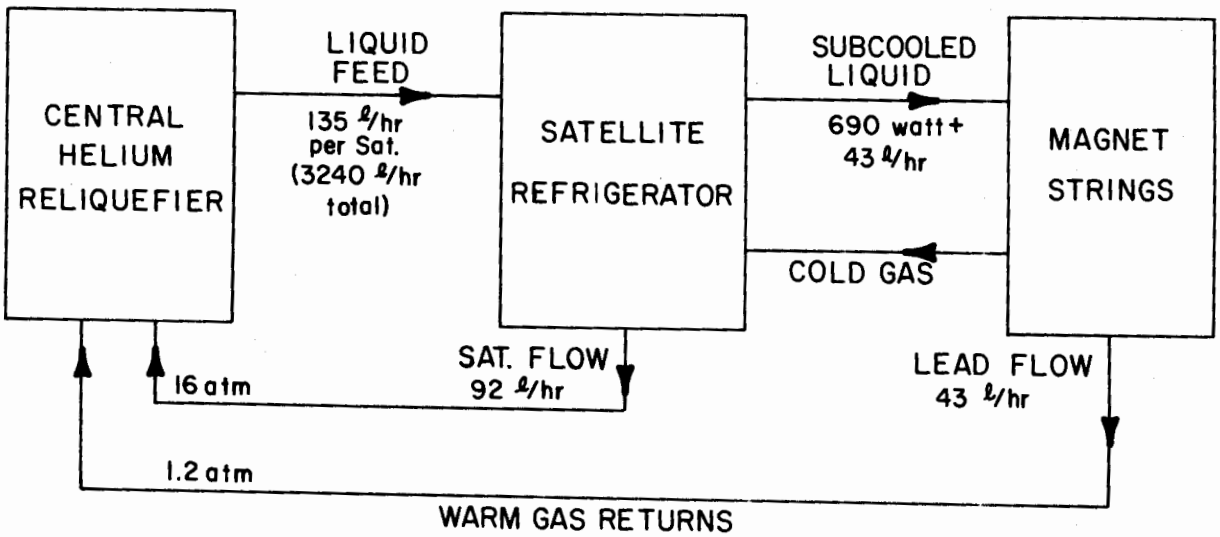

Fig. III-6 Refrigeration schematic

Many possible uses exist for the central liquefier. It can provide refrigeration for beam-line magnets. Depending on the actual heat loads developed by the Energy-Saver system, it may be adequate to run only one helium compressor at a time. In the event of a future increase in liquid-helium requirements, it is possible to rearrange the cylinders on the helium compressors and to approximately double the plant output. This would require an expenditure of approximately $200,000 to buy some additional cylinders.

2. Satellite refrigerator. The satellite refrigerator unit has three possible modes of operation, as shown in Table III-V and in Fig. III-7.

Table III-V. Satellite-Refrigerator Operation

Mode	Consumption	Production
Satellite	91 ℓ/hr He	690 W
Refrigerator	37 ℓ/hr N_2	445 W
Liquefier	60 ℓ/hr N_2	90 ℓ/hr He

In the satellite mode, the system is continuously supplied 3.2 g/sec of liquid helium from the central liquefier. In the refrigerator and liquefier modes, which are used when the central liquefier is not operating, liquid nitrogen is used instead of liquid helium.

Reliability of the satellite refrigerator system is high, for the following reasons:

(i) The compressor package consists of ammonia refrigeration compressors. These machines are commercially produced and have a proven record of reliability.

(ii) The expanders are installed in separate canisters. This allows quick removal and replacement with a spare unit. During the absence of an expander, the satellite refrigerator can produce the same amount of refrigeration through the addition of 400 ℓ/hr more liquid helium supplied by the central liquefier.

I. Control System

The Energy-Saver ring will be controlled completely through the present Main-Ring control network. No new central-control or transmission facilities will be needed.

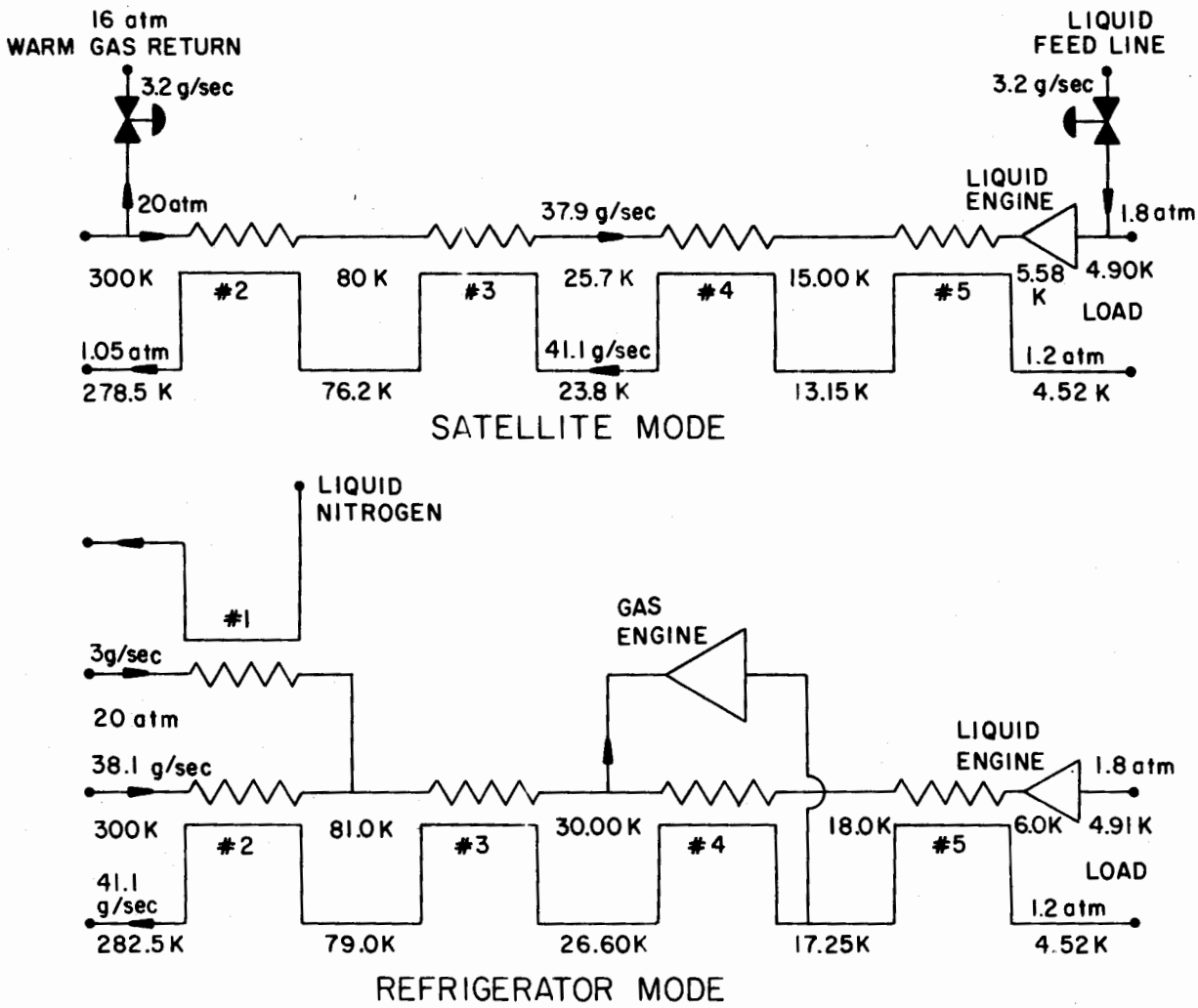

Fig. III-7 Satellite-refrigerator modes

IV. SCHEDULE AND ESTIMATED COSTS

This chapter presents the estimated costs and time schedule to complete the Energy Saver portion of the Tevatron as defined in the introduction of this report. The total estimated cost over the proposed construction period is $38.9 million.

The relatively small allowance for conventional construction and utilities reflects the fact that the Energy Saver will be installed in the existing Main Ring and will require relatively minor modifications to buildings, tunnels and utilities already in use.

This project will provide for the superconducting dipole magnets and superconducting quadrupole and correction elements required to complete the full ring. These magnets will supplement those already produced and installed under the R&D project through which the initial designs were developed.

The funding rate requested by Fermilab will provide for beam tests in the completed ring to begin in 1980. This brisk rate is also an economical one, because it minimizes the effects of escalation. It is shown in the table below:

Fermilab Preferred Funding
(in thousands of dollars)

Fiscal Year	Authorization	Appropriation	Obligation	Costs
1979	$38,900	$ 32,500	$ 32,500	$ 30,000
1980	--	66,400	6,400	8,900

On the other hand, the construction schedule on page 54 below is based on the financial schedule as presented in the President's budget for FY 79, which is as follows:

President's Budget Funding
(in thousands of dollars)

Fiscal Year	Authorization	Appropriation	Obligation	Costs
1979	$ 38,900	$ 10,000	$ 10,000	$ 6,700
1980	0	22,000	22,000	25,300
1981	0	6,900	6,900	6,900

This financial schedule would permit beam tests in the completed ring to begin in 1981. Because of the effects of escalation, it is possible that incremental funding will be needed to complete this project.

Details of the cost estimate are as shown in Table IV-I.

Table IV-I. Construction-Cost Estimate
(Thousands of dollars)

Engineering: Design and Inspection		$ 4,500
Construction: Conventional Facilities		1,950
Construction: Technical Components		27,150
Magnets and Stands	$13,500	
Refrigerators	10,000	
Power Supplies and Controls	850	
RF System	1,300	
Beam Extraction	900	
Special Facilities (including vacuum, Beam Transfer, and Beam Abort)	600	
Total Construction Costs		$33,600
Contingency for E, D & I and Construction		5,300
Grand Total		$38,900

The proposed schedule for the Energy Saver is shown in Fig. IV-1.

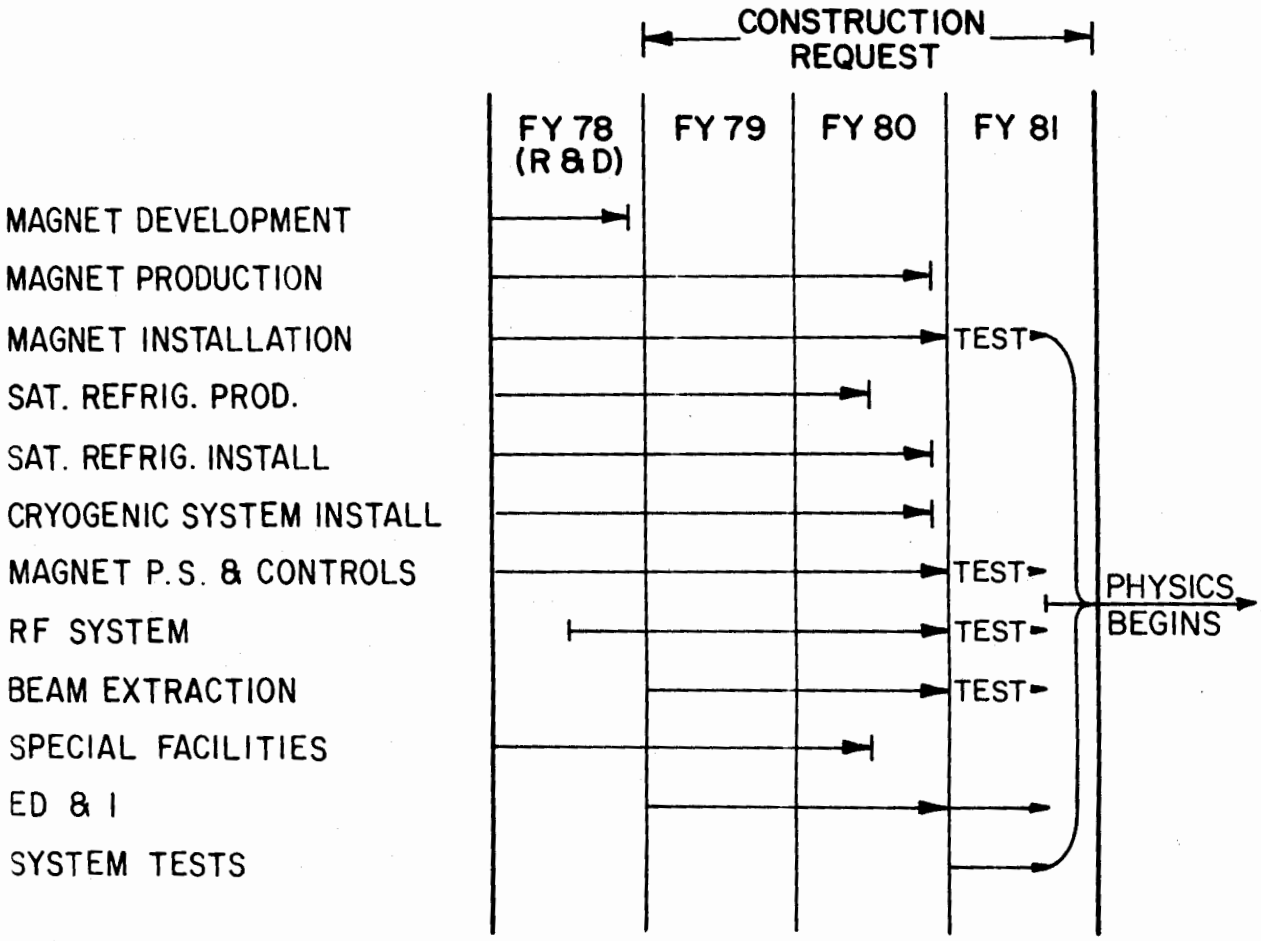

Fig. IV-1 Energy Saver Program Schedule

APPENDIX I. ENERGY DOUBLER MAGNET-MEASUREMENT AND PRODUCTION-MAGNET TEST FACILITY

R. Yamada

A. Introduction

In the past year, an extensive effort has been made by the Magnet Measurement Group to install a CTI 1500-W helium refrigerator and associated equipment for the production testing of Energy Doubler magnets at a rate commensurate with magnet production. The unit was delivered in August, 1977 and was put successfully into operation in October, 1977, a much shorter time than is usual for such a system. Two magnets have been measured since October using the new system. The measurement data show quite excellent characteristics of these two magnets, especially E22-52D whose measurements are given in this paper.

Full aperture 22-ft long dipole production was initiated in January, 1976. These E-series magnets (two-shell, 3-in. bore) began with E22-1; E22-67 is just now being manufactured. Two types of cryostats have been developed, designated E22-1 and E22-14 series. Ten of the E22-1 series magnets were made, and two of these were measured for their magnetic-field characteristics and reported.[1,2,3] The rest were used for magnet-string tests.

Although about twenty of E22-14 series magnets have been produced with final cryostats, only five of them have been measured extensively, E22-15, -19, -33, -40 and -52D. In the first part of this Appendix the measurement data of these magnets are described. In the second part, the production test facility for testing all of the Energy Doubler/Saver production dipole and quadrupole magnets is described. The major component of the system, a CTI 1500-W refrigerator is now operational with one magnet test stand, and the full-scale test area will be in operation this spring (1978). The total number of magnets needed for the Energy Saver is 774 22-ft bending magnets and 180 5-ft quadrupole magnets. To test all these magnets in a reasonable time and with a

minimum of personnel, a very efficient testing facility with a fully automated system is required. The basic characteristics of the components and their functions are presented later in this appendix.

B. E22-14 Series Magnet Measurements

The magnets to be reported here are E22-15, -19, -33, -40 and -52D, which are E22-14 series magnets. More details are given for E22-52D, which is the prototype of the production magnets to be used in the sector test. The first three were measured using a prototype satellite refrigerator[4] and the other two with the newly installed CTI 1500-W refrigerator. The data-acquisition system, based on a PDP-11/10 and CAMAC system, was used for all of these magnets.

1. Quench. A typical load line and training for E22-19 is shown in Fig. 1. The maximum field values obtained with and without iron are 43.1 and 41.9 kG. All five magnets exceeded 40 kG at the center. The design field is 42.3 kG at 4.6 K at the center of the magnet. Without a heat exchanger in the present refrigeration systems, the single-phase helium temperature varied from 0.2 to 0.4 K above the design value. This lowered the maximum attainable field by 4 to 8%.

During a quench, the pressure in the single-phase helium, the current and the magnet voltage are monitored. The energy losses in the magnet and the dump resistor of 0.2Ω, and the upper limit of the coil temperature are calculated as shown in Fig. 2 for E22-52D.

2. AC loss. The ac loss of the magnets is measured as a function of maximum field and also as a function of ramp rate. Typical curves for ac loss versus current, starting at zero field and at 9 kG, are shown in Fig. 3 for E22-19. Once above the flux-penetration field (~1 kG), the losses should be roughly linear with increasing field. This is very close to the case up to about 25 kG, where the losses start increasing more rapidly. The increase in energy loss above 25 kG indicates an inelastic mechanical movement within the coil. If this increase did not occur then the

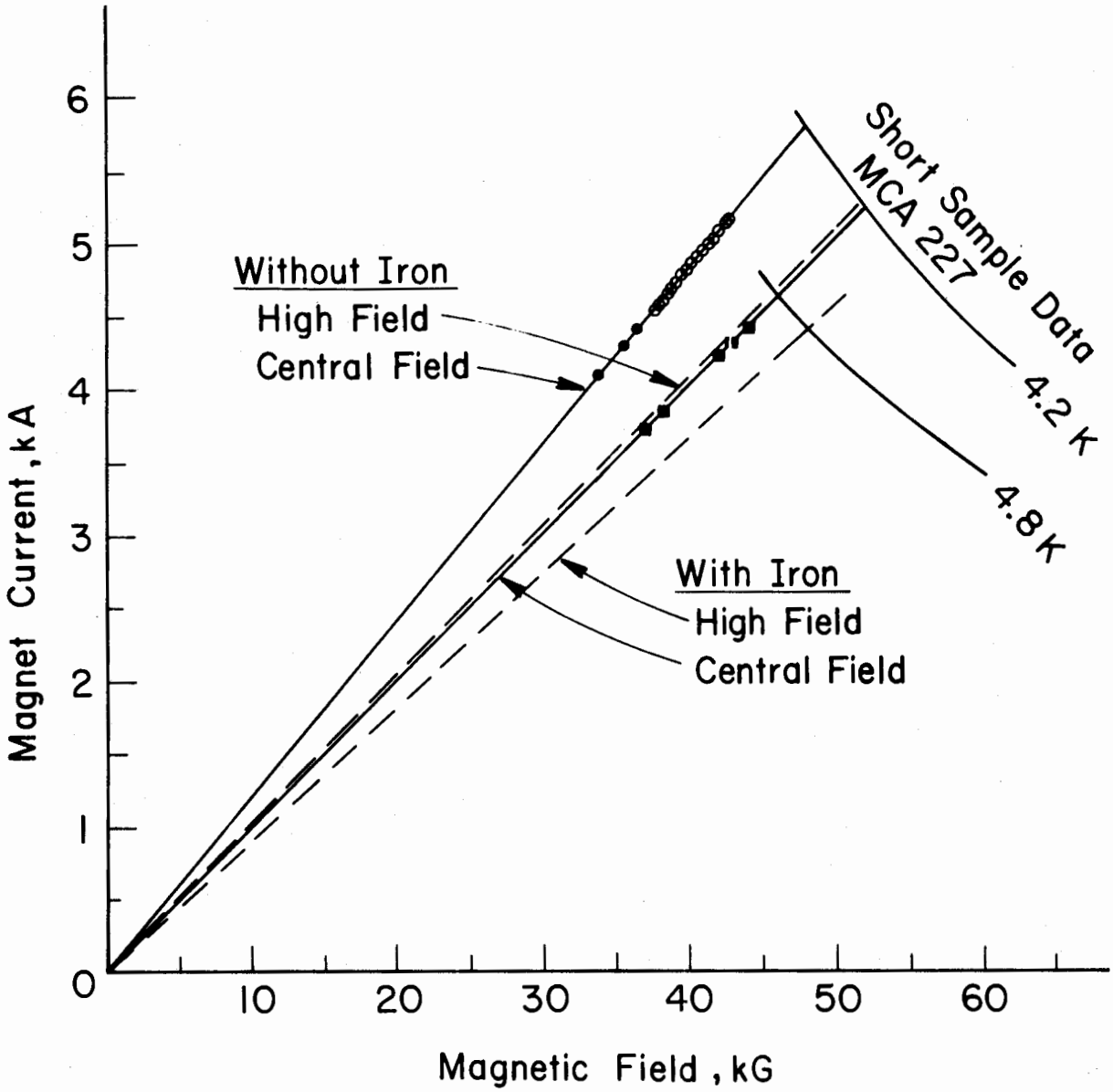

Fig. A-I-1 Load lines and training for E22-19

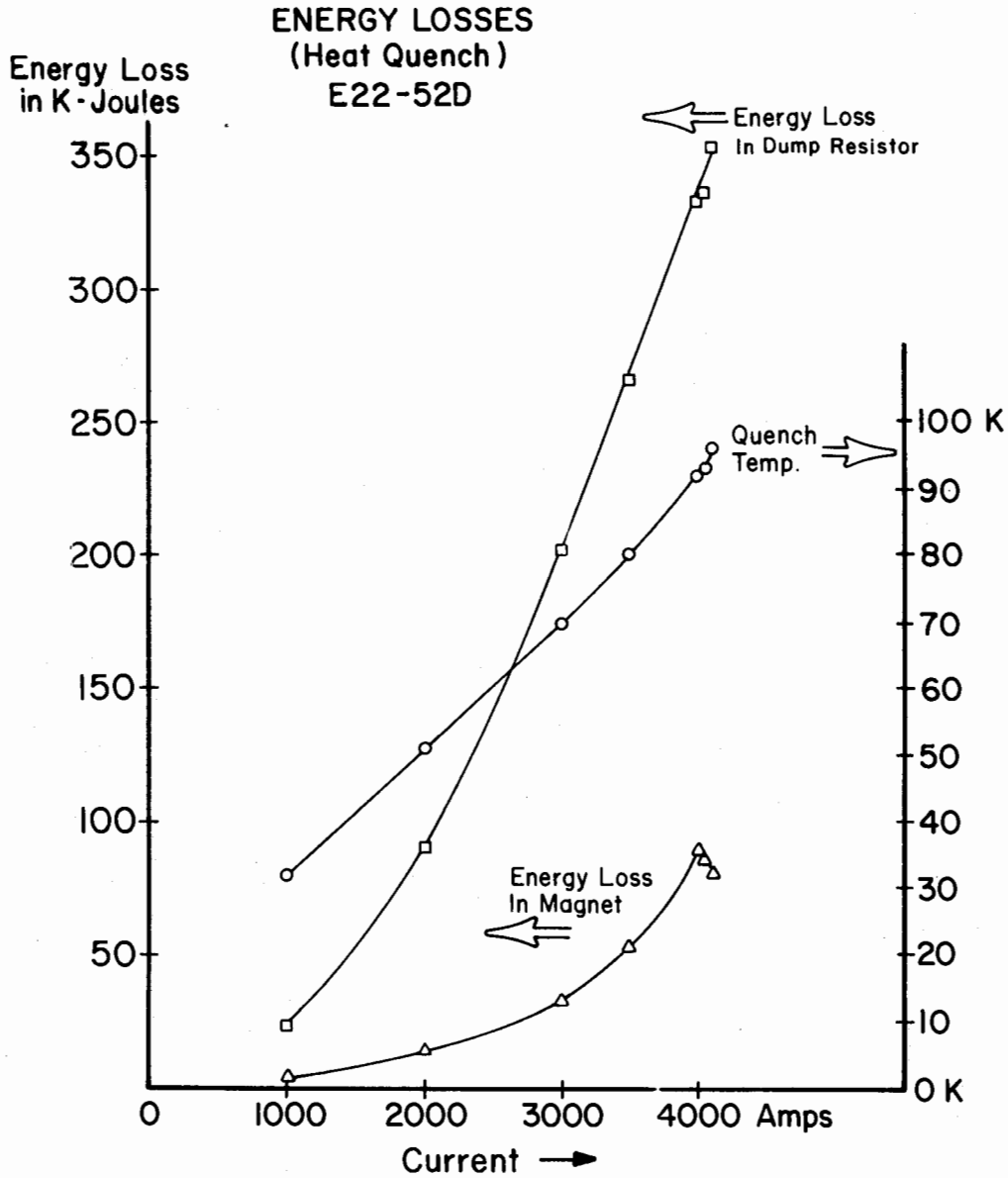

Fig. A-I-2 Parameters during quench for E22-52D

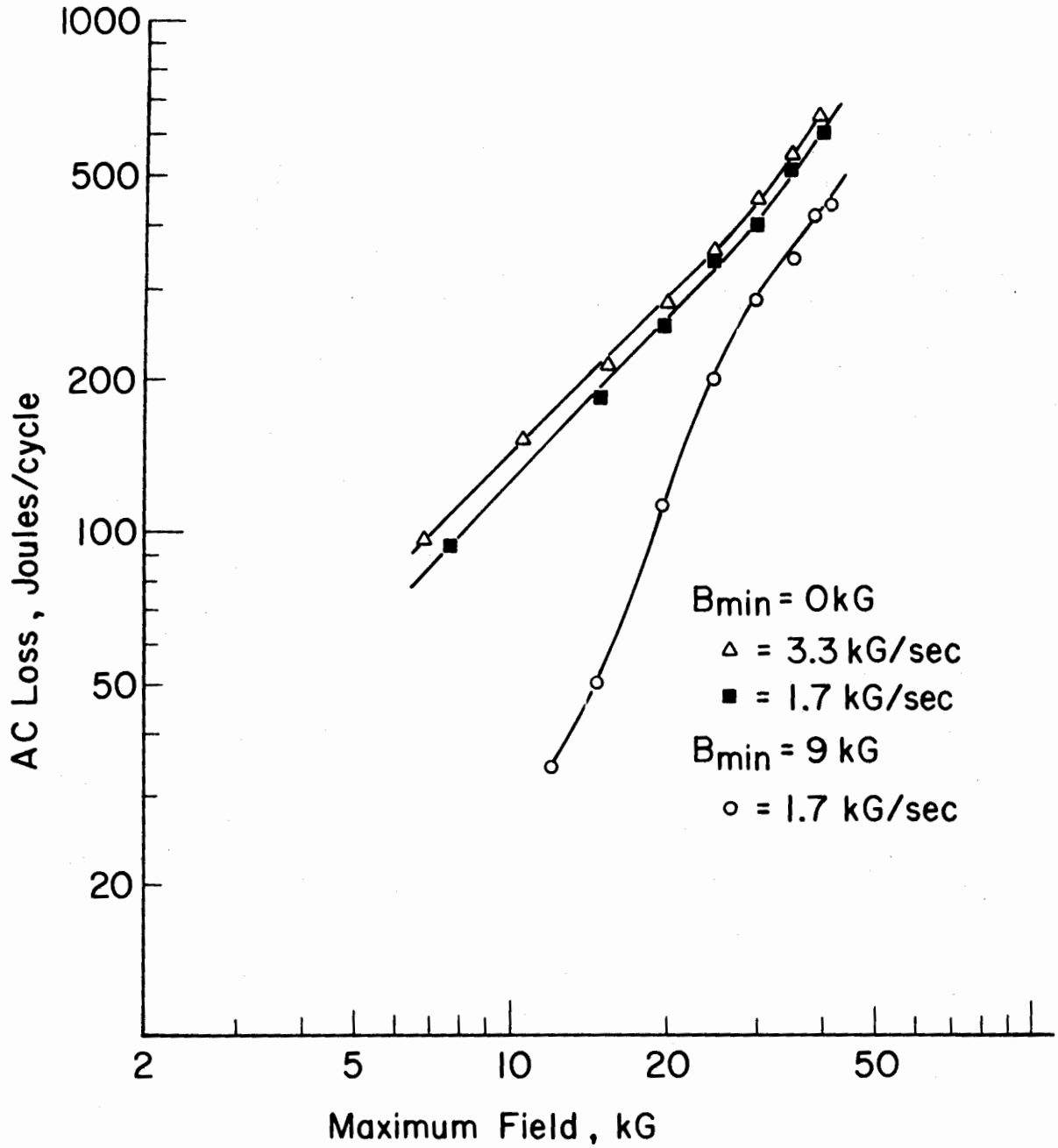

Fig. A-I-3 AC loss for E22-19

loss at 42.3 kG (1000 GeV) would be about 600 J (or about 10 W/magnet) for a 1-min. cycle. For a cycle between 4.2 kG (100 GeV) and 42.3 kG (1000 GeV), the energy loss (i.e., heat dissipated in the helium) is about 50 J less than the loss for a cycle starting at zero field. The most-recent magnet E22-52D shows less mechanical movement, but slightly increased ac loss due to compactness of wire.

3. Field-homogeneity measurement with NMR. The central field of each magnet is measured using an NMR circuit and a signal averager.[5] At fields below 20 kG, it is possible to obtain a clean signal with a proton sample, but at higher fields we need a lithium sample because of low signal-to-noise ratio.

Several magnets were measured at a current of 2000 A at 6-in. intervals along their entire length. The field fluctuated by ±0.05% along the magnet axis. The data for E22-19 are shown in Fig. 4. Additional measurements showed these fluctuations to be reproducible. These are probably caused by small irregularities in the production accuracy of the magnet. A change in the effective diameter of the coil of only 3 mils could account for the total variation in the field. The field homogeneity can also be affected by the error of coil angle or by a misalignment of the iron relative to the coil. The field was also measured at 2-in. intervals and this measurment revealed a fine structure with a 6-in. period, which corresponds to the length of a coil-clamp lamination packet.

4. End field. The fringing field was measured on the axis of magnet E22-33. The measurement was done with a Hall probe at 2005 A. From this measurement the effective magnetic end was estimated at 2.960 in. outside the edge of the lamination core.

5. Vertical plane. The vertical magnetic plane is measured with a stretched wire. A single-turn search coil is stretched through the warm bore using a 4.0-mil tungsten wire. The width of the loop is maintained with an accurately polished 1.0000-in. diameter quartz spacer at each end. The plane of the search coil is rotated by synchronous stepping motors at each end, with 20,000 steps per revolution, and the angle is monitored by shaft encoders with a resolution of 32,768 counts per revolution.

A magnet under test is placed horizontally using precision split levels, referencing from the outside surface of the iron laminations. Then, also using split levels, the plane of the search coil is placed vertically. The magnet is excited to maximum field and the output of the search coil is integrated. A non-zero output of the search coil signifies rotation of the magnetic vertical plane relative to the geometrical vertical plane. The coil is then rotated by predetermined values around the geometrical vertical plane, and at each rotational position, the magnet is ramped up and down. The output voltage of the coil is linear at these small angles and is interpolated to give the zero-crossing angle, which corresponds to the angle of the magnet vertical plane. The minimum resolution of the system is defined by that of the stepping motor which is about 0.3 mrad. The vertical plane of E22-19 was measured to be off by about 0.1° from its geometrical plane. More recently, the magnetic vertical plane is being measured and corrected during assembly of cores.

6. Integral field value. To measure the integrated field value of the magnet, the same stretched-wire device which was described earlier was used. After that measurement, the search coil plane is rotated by 90° from the magnet vertical plane of the magnet under test. From that position the search coil is flipped by 180° to give the integrated remanent-field value. The magnet is excited and the output of the integrator gives the integrated field value corresponding to that excitation. The output voltage of the integrator and that of the current shunt are measured with 5-1/2 digit DVM's (DANA 5900) for precision measurements.

The integrated field value of magnet E22-33 was measured up to 3000 A and the data are shown in Fig. 5. The ratio of the total voltage, including the remanent-field effect, to the corresponding current value is shown in that figure. The magnet was excited slowly from zero current to the maximum value and back down to zero. The hysteresis effect, which is about 0.1% and is due to magnetization effects, is clearly shown. This value corresponds exactly to the hysteresis effect in the transfer function observed with NMR measurements.[6]

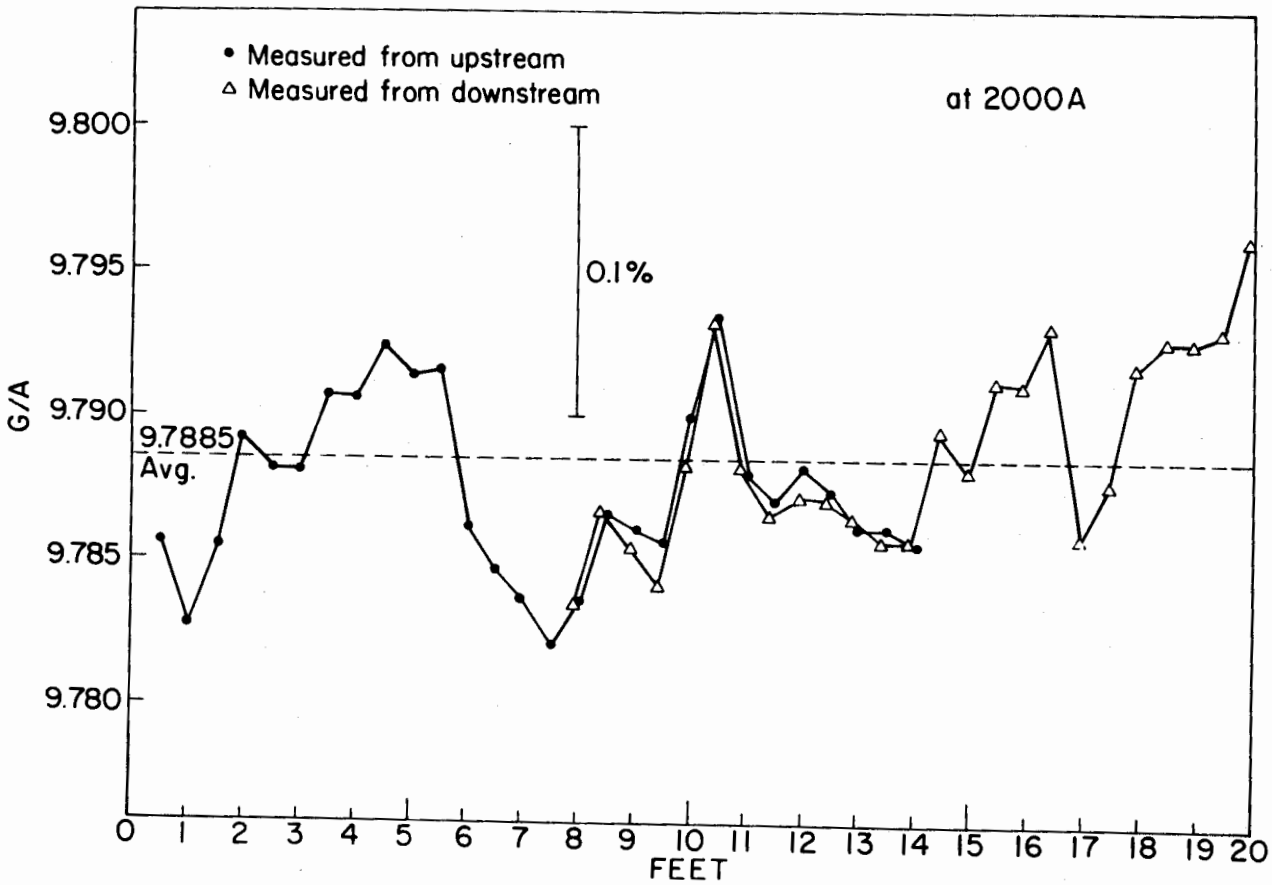

Fig. A-I-4 Field homogeneity of E22-19 measured with NMR

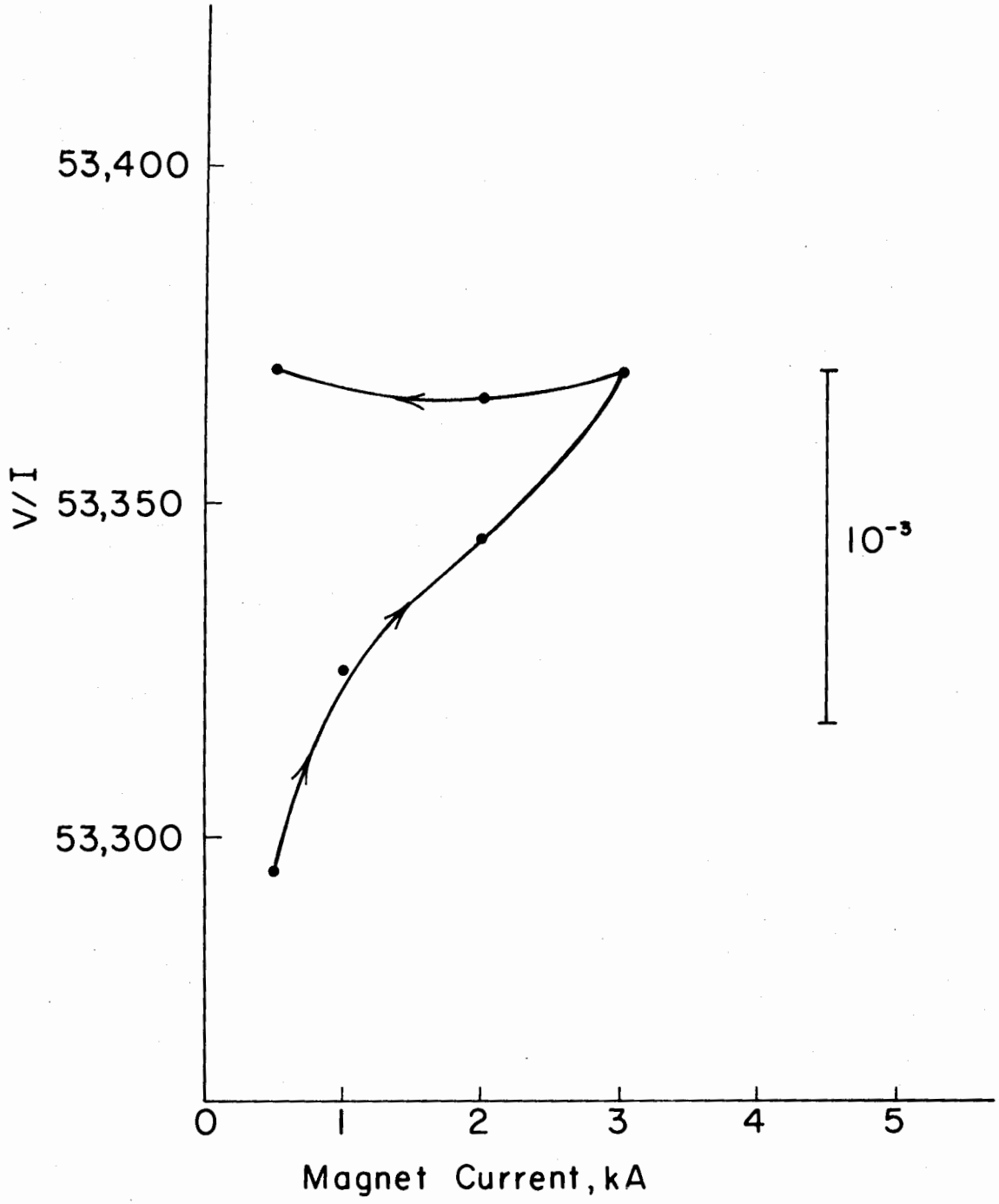

Fig. A-I-5 Integral field value for E22-33

The effective magnetic length which was calculated from this measurement was 253.028 in. at 2000 A, which means the effective edge is 3.014 in. beyond the end of the iron yoke. This value agreed reasonably well with the value by a Hall probe.

7. Harmonic analysis of magnetic field. The harmonic components are measured separately in the body section and in the end section and averaged values calculated. The 4-, 6-, 8-, and 10-pole coefficients of the magnetic field are measured directly using a harmonic coil and the 12- and 18-pole coefficients are extracted from the data for lower-multipole windings. All coefficients are measured from 5 kG up to 40 kG. Magnetization of the superconductor produces a large hysteresis in the 6-pole component at low field and because of this the 6-pole is measured down to 0.5 kG, which is shown in Fig. 6 for E22-52D. Both skew and normal coefficients were measured and shown as a_2 and b_2 in Fig. 6. The absolute values of normal 6-pole and 18-pole components of E22-52D agreed well with their calculated values. The skew components of E22-52D was quite small (as they should be) except the quadrupole component.

Due to symmetry, the 4-pole coefficients should not exist, but their presence can be explained by construction errors or off-centering of the coil. We are confident that in fine tuning of the production line, the 4-pole coefficient can be held well below the value required for operation. When off-center, the 4-pole component has some error from contributions from higher-order harmonics, especially the 6-pole, which is the same order of magnitude. The magnetic field can be reconstructed from the coefficients. Figure 7 shows normalized field error $\Delta B/B_o$ as a function of the distance from the center of the magnet along the horizontal axis. In this figure 4-, 6-, 8-, 10-, 12- and 18-poles were used for E22-52D. The usable region is about ± 1.1 in. The agreement between the measured value and the design value is excellent except for the quadrupole term.

Field components are also measured at the magnet end by putting a long harmonic coil over the end region, but on the most

recent magnets, other multipoles have been measured and the average field calculated.

C. Production Test Facility

The new production magnet test facility is located inside Industrial Building #1 and consists of a cryogenic refrigeration system, a distribution system for the liquid helium, and testing equipment. The layout of this facility is shown in Fig. 8. The refrigeration system is a CTI 1500-W helium refrigerator, which has a compressor system, a cold box, and a control console. The whole system was put into operation successfully last October. It has been operated over 300 hours by now (January, 1978). The compressor system consists of two oil-cooled Sullair screw compressors, which are powered by 200- and 1000-horsepower motors, and an oil-separation system. Figure 8a is a photograph of the compressor system being installed outside Industrial Building #1. The refrigerator cold box contains four heat exchangers, two Sulzer gas-bearing turbo expanders, a small internal dewar, and a JT valve. Figure 8b is a photograph of the cold box installed inside Industrial Building #1. In the foreground is the 10,000 ℓ helium dewar. The control console with its flow diagram, indicators, alarms, and controllers allows one-man operation. Much of the operation of the refrigeration system will be monitored and controlled by a Texas Instrument 5TI Sequencer mounted on the control console. The refrigeration system is designed as a liquefier to produce 330 ℓ of liquid helium per hour at 4.4 K. As a refrigerator, it was tested to produce about 2000 W at 4.8 K.

The CTI 1500-W refrigerator is one of a new generation of helium refrigerators whose chief feature is the incorporation of the Sulzer gas-bearing turbo-expanders. Very efficient operation is possible with these high-speed (3000 rev per sec) expanders, which have only recently become available. Figure 8c is a photograph of the warm brake wheel of the high-temperature expander and Fig. 8d is the cold end of the same expander, where a scale is included. Only approximately 10 cm separates the low-temperature expander wheel from the room-temperature compressor wheel.

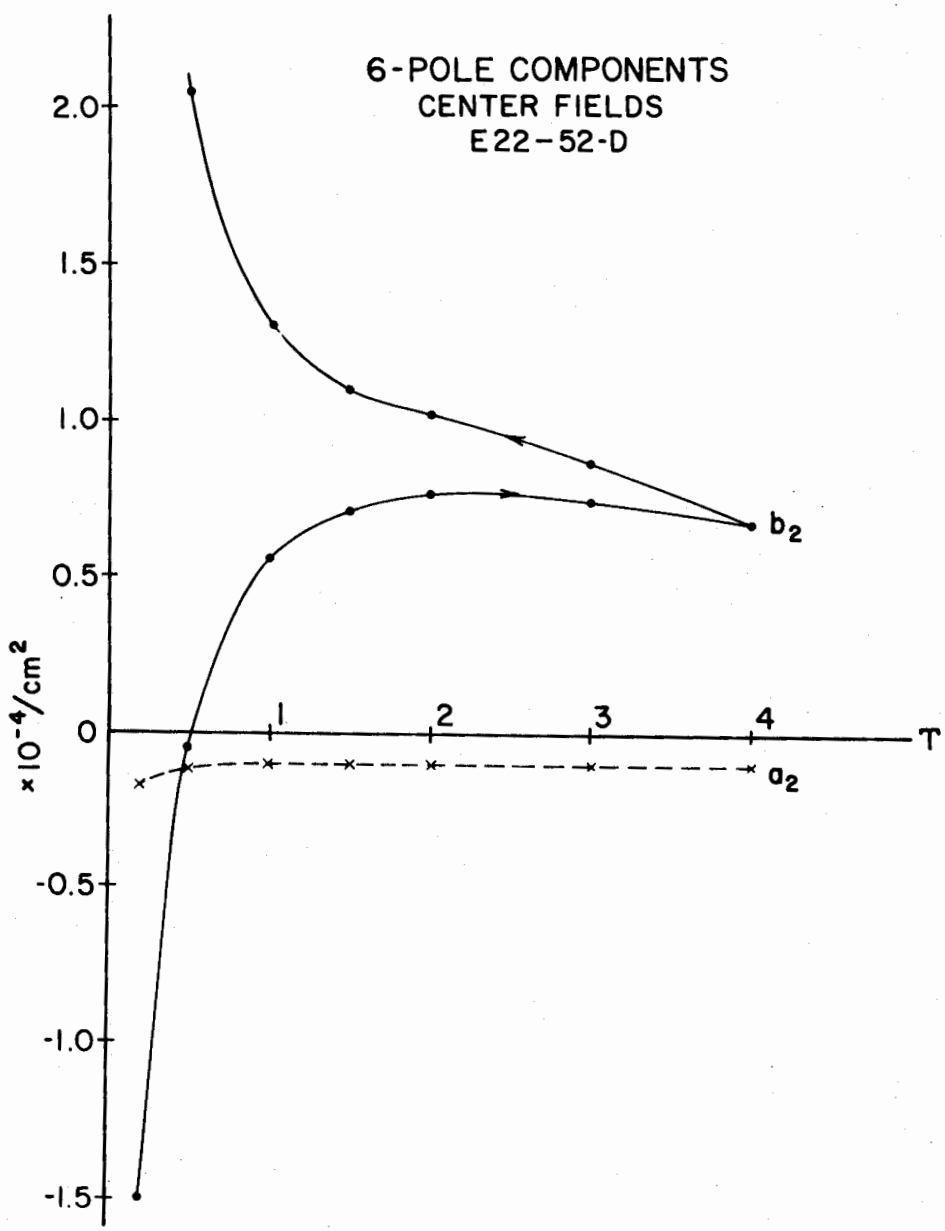

Fig. A-I-6 Sextupole components of E22-52D

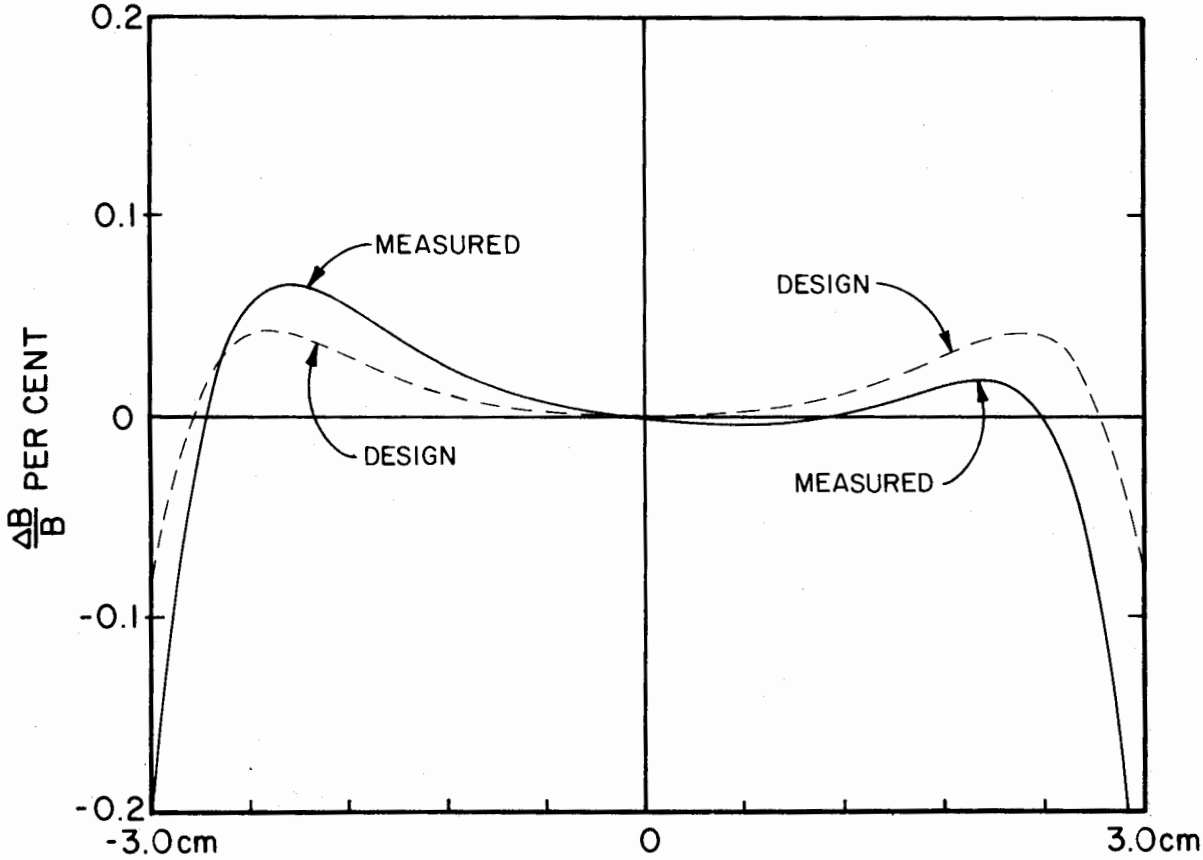

Fig. A-I-7 Field reconstruction from harmonic components for E22-52D

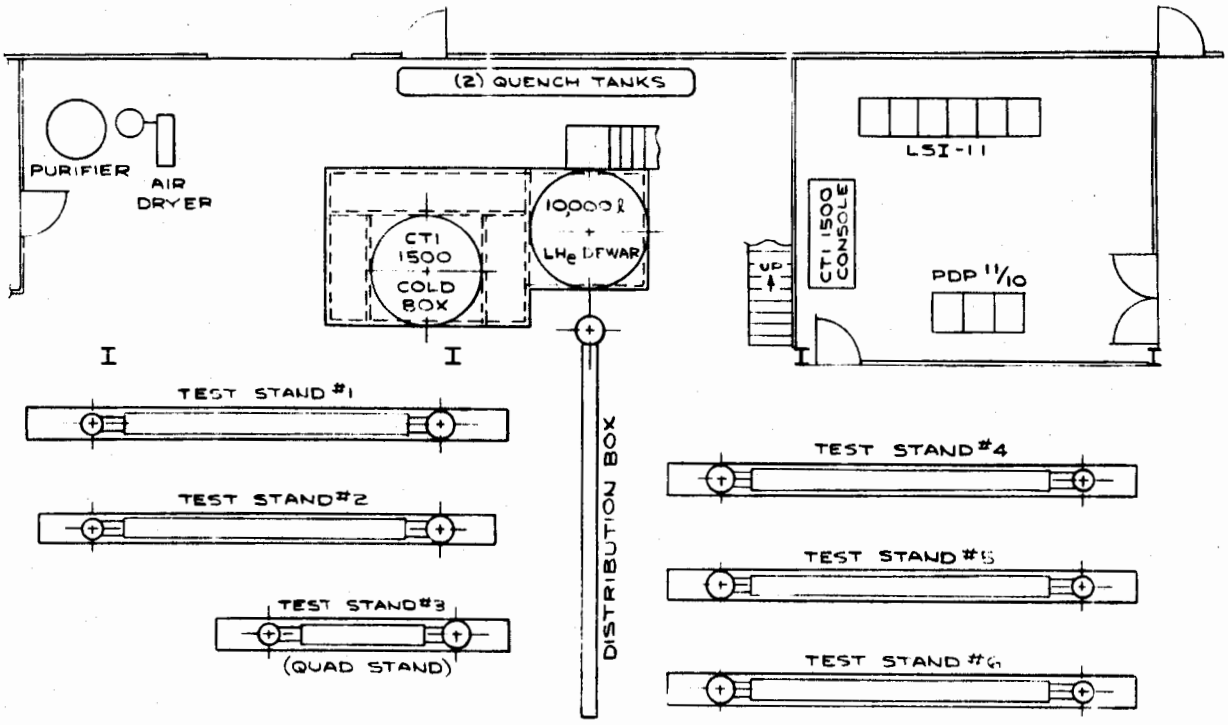

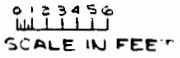

Fig. A-I-8 Layout for production magnet test facility

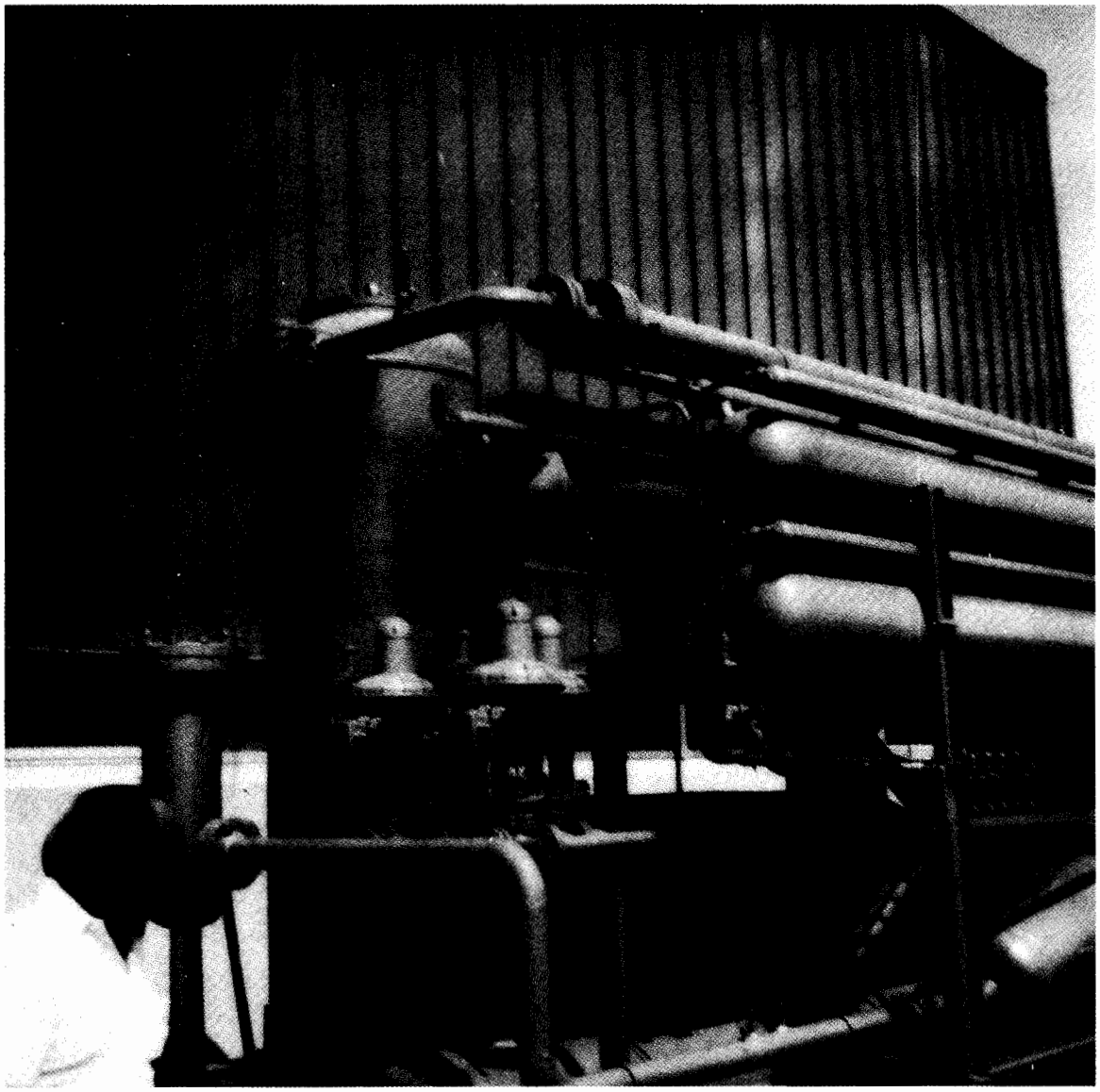

Fig. A-I-8a Compressor System being installed

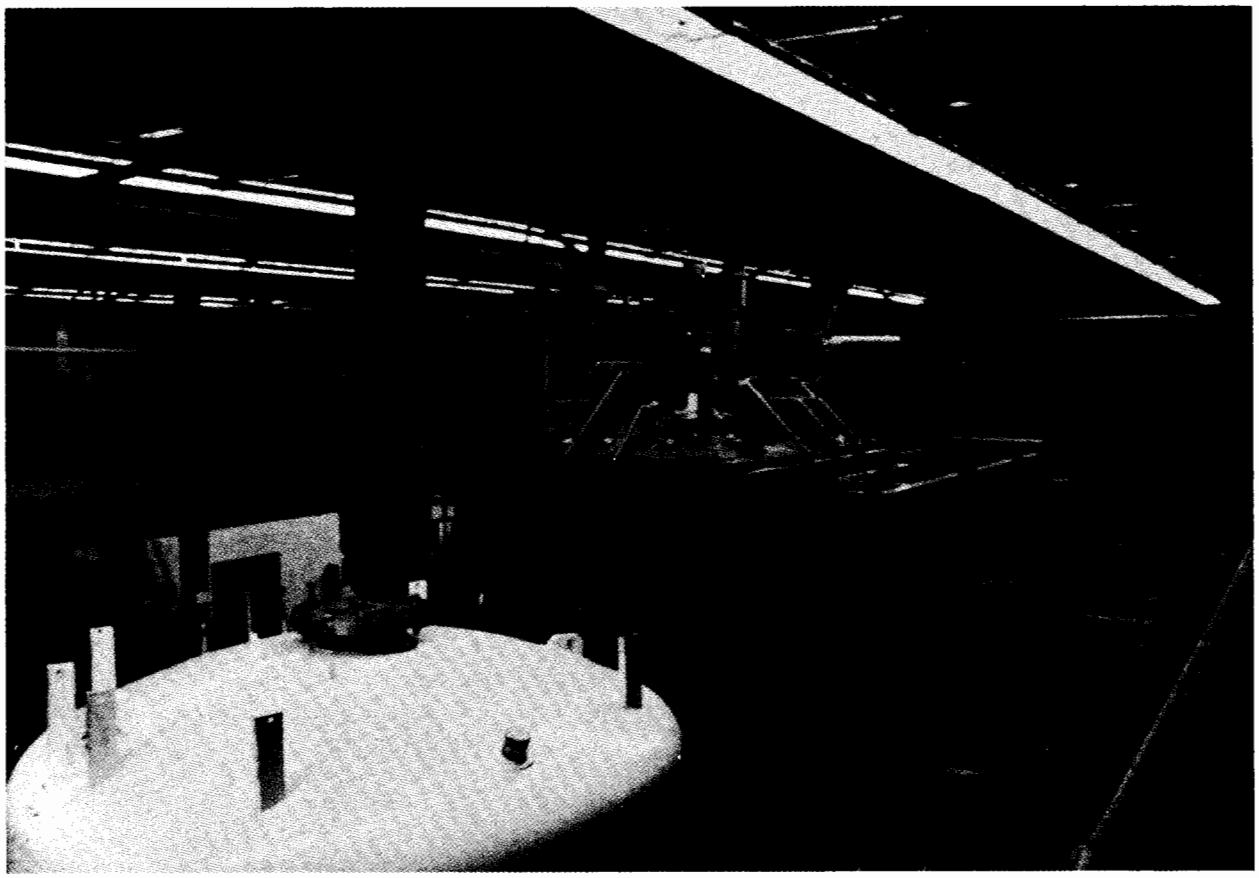

Fig. A-1-8b Cold Box installed in Industrial Building #1

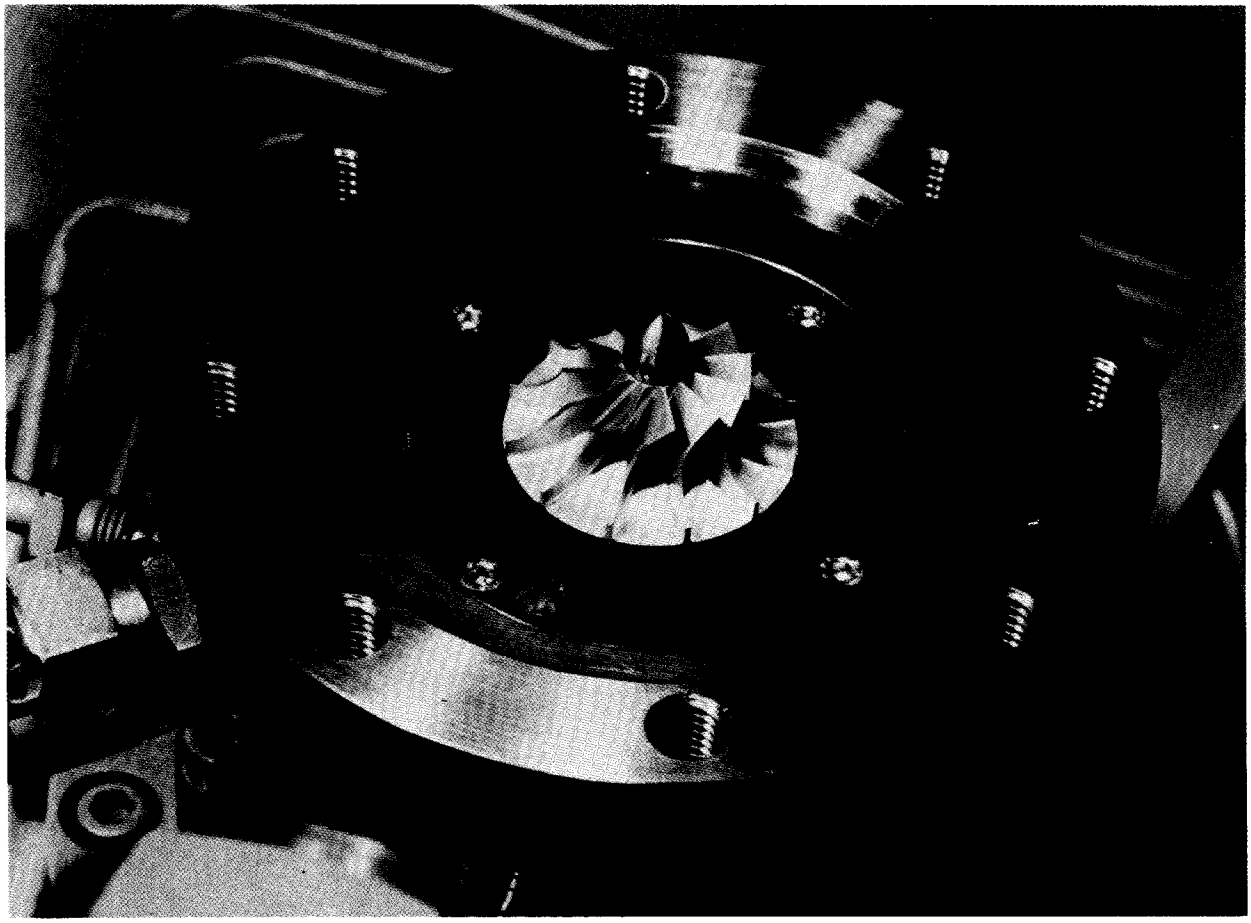

Fig. A-I-8c Warm Brake Wheel

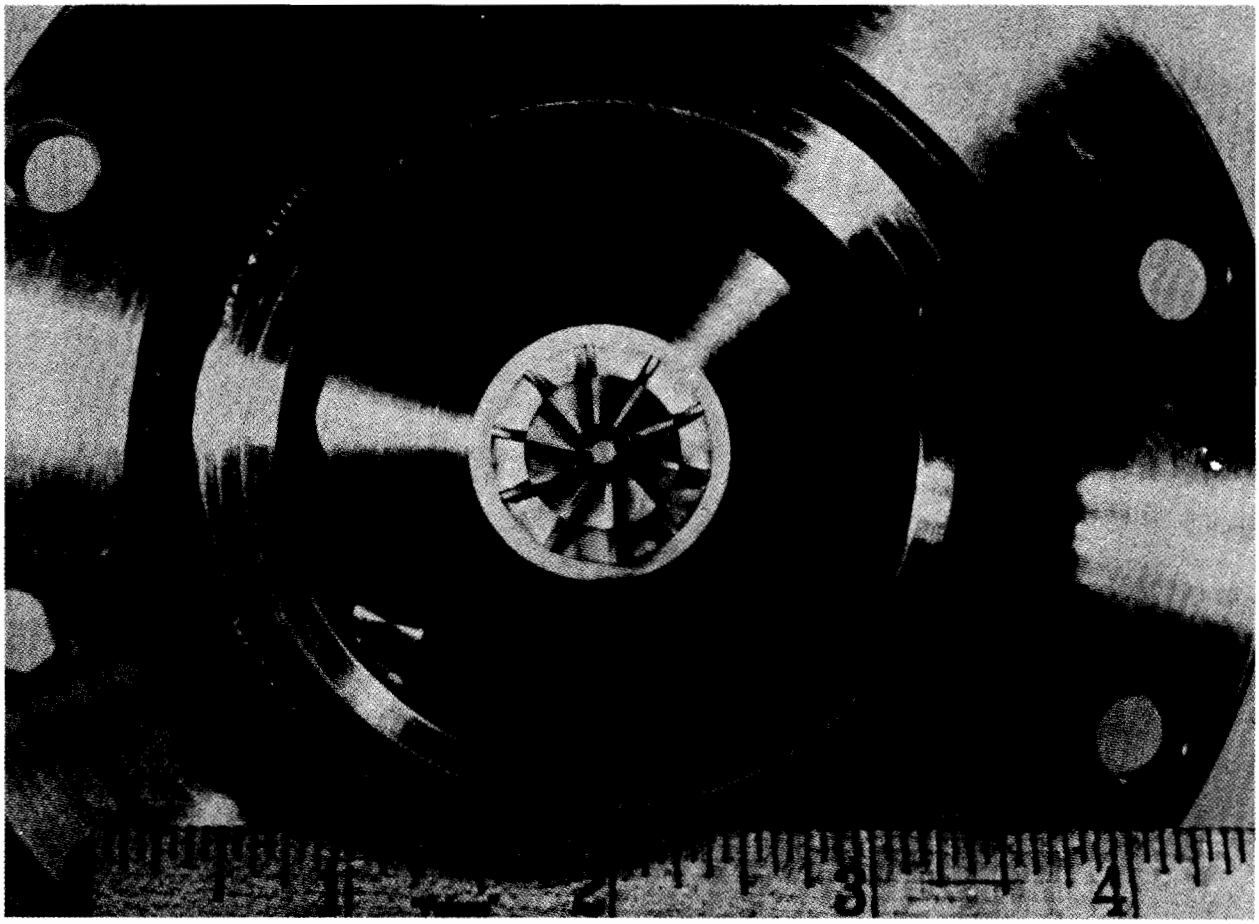

Fig. A-I-8d Cold End of Expander

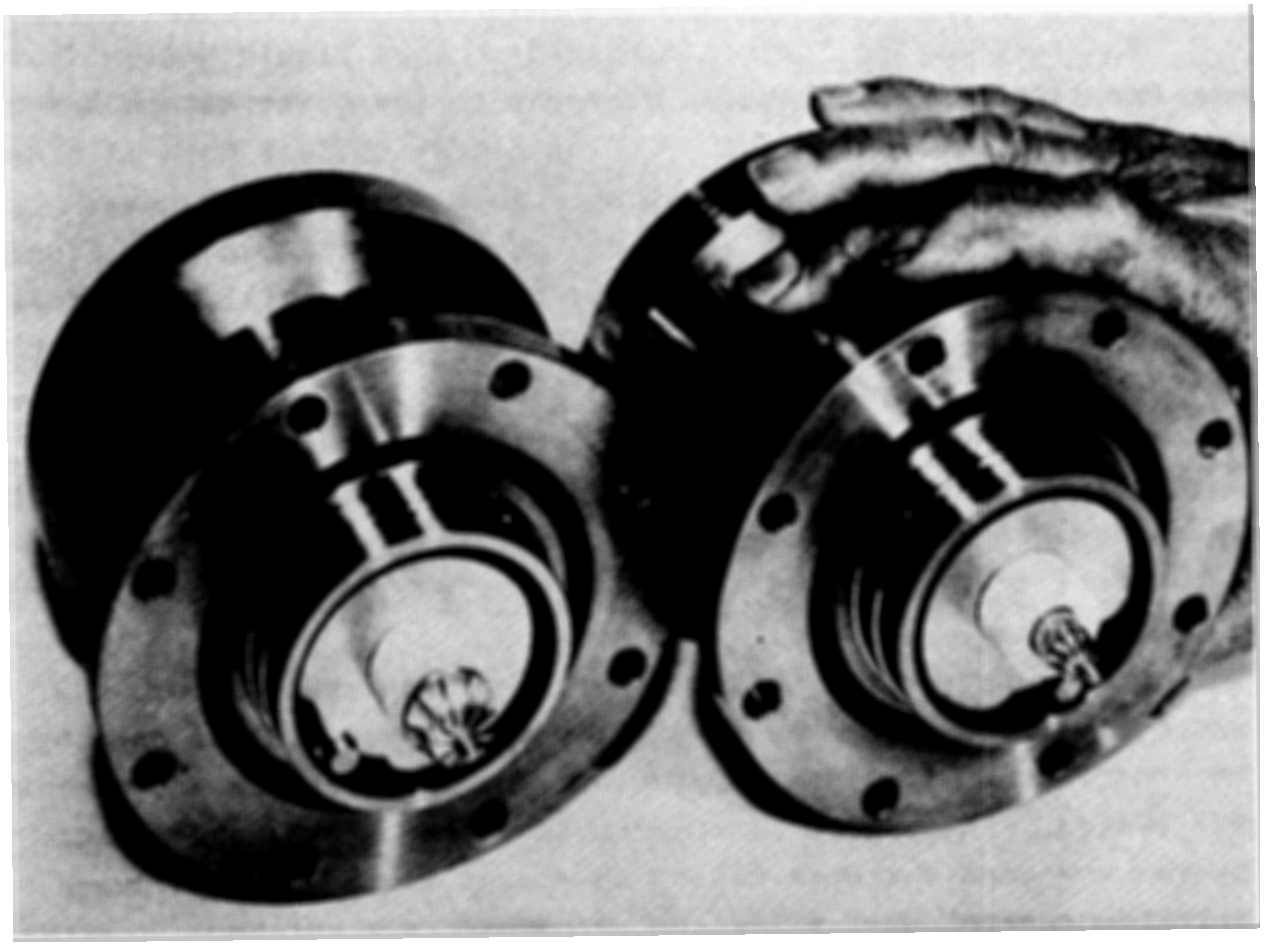

Fig. A-I-8e Two Turbine Assemblies

The assemblies for the two turbines with the cold ends facing the camera can be seen in the photograph of Fig. 8e. In addition to the high efficiency of the turbo expanders, on-stream reliability is much higher than previously attainable (20,000 hours mean time between failure).

The testing facility is designed so that liquid helium from the CTI 1500 can be delivered directly to the distribution box or to a 10,000-ℓ storage dewar. It can either collect here if a magnet is not being tested or be pumped to a magnet under test. There will be six testing stations, each with its own set of end boxes, transfer lines, and instrumentation. One will be dedicated to a standard magnet. Each can be operated totally independent of the others, but several can be receiving liquid at the same time. Others might have a magnet being installed, leak checked, or warming up. Eventually one or two of these testing stations will be devoted to quadrupoles. As of now (January, 1978), we have one magnet test stand working. The remaining will be completed by this spring.

The operation and monitoring of the distribution box, six magnet test stands and other utility components will be done by an independent LSI-11 microprocessor and CAMAC system and another 5TI system. These will be interfaced to the PDP-11 and CAMAC system now used for data taking in magnet tests. The hardware for this control system will be completed this spring.

The end box supplying helium is equipped with pressure indicators and temperature indicators in the single-phase and two-phase helium lines and in the nitrogen line. A helium-level indicator is also supplied for the single-phase helium line. A heater is in the single-phase line and VPT's are located in a steady-state region on either end of the heater. This provides a method of calibration for measurements of heat leak into the single-phase line. The return end box has a JT valve and is equipped with pressure indicators and VPT's in the liquid-helium stream immediately before and after the JT valve. For heat-loss measurement, the warm-bore cryostat, inserted into the magnet for field measurement, will be filled up with liquid nitrogen to

reduce heat loss through it.

During a quench, 70 to 90% of the magnet energy is dumped externally in a 0.2-Ω dump resistor. Data acquisition and manipulation are accomplished by an on-line computer (a PDP-11/10 and CAMAC system) which has been developed specifically for this purpose.

It will take about eight hours to install and cool down a magnet, another eight hours to measure and test it and another eight hours to warm it up. A magnet will be tested in one day. The facility is designed to test three magnets a day.

D. Procedures for Production-Magnet Tests

After a magnet is finally assembled with canning and cores, it will be tested using the equipment and facility above. The following procedure will be used for production tests of a magnet after simple vacuum-leak tests:

1. The magnet will be trained up to maximum field.
2. Ramp-rate dependence of the magnet will be measured.
3. AC loss of the magnet will be measured.
4. The integrated field value of a bending magnet or the integrated gradient value of a quadrupole magnet will be measured in pulsed operation from injection field to the maximum field.
5. The magnetic median plane of the magnet will be determined electronically by finding a vertical magnetic-symmetry plane, and survey marks will be put on the outside surface.
6. Heat loss of the magnet will be measured.
7. Remanent field and some low fields will be measured.
8. Harmonic analysis of the field distribution will be done for both dc and pulsed operation on some sample magnets.

REFERENCES

1. R. Yamada, H. Ishimoto, and M. E. Price; IEEE Trans. on Magnetics, MAG-13, No. 1, 86 (1976).
2. R. Yamada, H. Ishimoto, and M. E. Price; IEEE Trans. on Nuclear Science, NS-24, No. 3, 1309 (1977).
3. R. Yamada, H. Ishimoto, and M. E. Price; TM-726 (1977) Fermilab Internal Report.
4. R. Yamda, M. E. Price, and D. A. Gross; TM-741 (1977) Fermilab Internal Report.
5. R. Yamada et al; IEEE Trans. on Nuclear Science, NS-24, No. 3, 1312 (1977).
6. H. Ishimoto et al; IEEE Trans. on Nuclear Science, NS-24, No. 3, 1303 (1977).

APPENDIX II. LAMINATED TOOLING

W. B. Hanson

The Energy Saver magnet coils must be manufactured in such a way as to be accurate to within a tolerance of several mils (thousandths of an inch), but more importantly, they must be consistently the same as each other to within 1 to 2 mils. To do this, the tooling must of necessity be made to half-mil tolerances. These kinds of tolerances on 22-ft long tooling are at the edge of the state of the art. It is almost impossible to achieve these tolerances on flat surfaces, to say nothing of curved, angled and irregular surfaces. Our experience has been that to attain tolerances within a few mils on tools of this length has taken as long as six months to achieve. To overcome this problem, we have developed the concept of laminated tooling. Dies can readily be made to 1/10-mil tolerances. Moreover, dies which are less than 10 in. x 10 in. overall can be made very speedily by the use of wire electrolytic-discharge machining (EDM). The pieces that are punched from such a die will be within about 1 mil of the die size itself, but here again, each lamination punched will be exactly the same as every other lamination. It is this consistency that is needed in our tooling. The laminations are then stacked into convenient modules and doweled together with ground pins. Then modules are keyed to one another and the entire assembly stiffened by continuous structural members. Figure 1 shows a collection of individual laminations that are used for present Saver dipoles.

The sheared edge on a laminated part consists of a cleanly sheared portion and a broken portion. Normal laminations such as those used on magnets will have perhaps 20% sheared land and 80% broken. This break is perhaps 3 or 4 mils under the sheared portion. The reason for this is that a die to produce such a lamination will have as much as 5 or 6 mils clearance between the punch and the die. This is necessary so that the die life will withstand stamping a million or more laminations. In our case such a high production is not necessary, and the tolerances in

the die can be held much closer to produce a sheared land of up to 50% of the total material thickness. Furthermore, the broken portion is not as far below the sheared portion as it is with large-clearance dies. Laminations with almost 100% sheared edge and practically no break can be achieved by a process called "fine blanking". This process is the ultimate in high-quality laminations, but it has the disadvantage of being somewhat more expensive for both the dies and the stampings. In addition, the lead time required to build such dies is more like 12 weeks as compared to 3 weeks for conventional EDM dies.

We avoid the problem of the broken edge being adjacent to the critical coil surface by the insertion of a heavy shim between the laminated tooling and the coil. Rectangular shims can be ground to extremely accurate tolerances. The use of these shims has a secondary value in that as production progresses, the size of the coils can be "tuned" to eliminate various multipole errors in the coils.

We have had one laminated component in use for several months; that is the double key for the winding mandrel that produces the final coil assembly. Figure 2 shows laminated tooling being inserted prior to winding a second shell. Figure 3 shows the completed winding ready for curing. This has been very successful and we are currently in the process of building all of our winding mandrels and molds out of laminated tooling for both the dipoles and the quadrupole magnets. The accompanying figures show the various laminations to be used. At the time of this report, stacking of these laminations into the tooling of components is about to begin.

One of the biggest advantages of laminated tooling is that not only are all of the laminations within a tool the same, but each tool is exactly the same as the other. This makes it possible to replicate the tooling at any time and to whatever extent is necessary to maintain the necessary rate of production. In addition, since the cost of dies and stacking fixtures are a one-time cost, subsequent tools are considerably less expensive than the original.

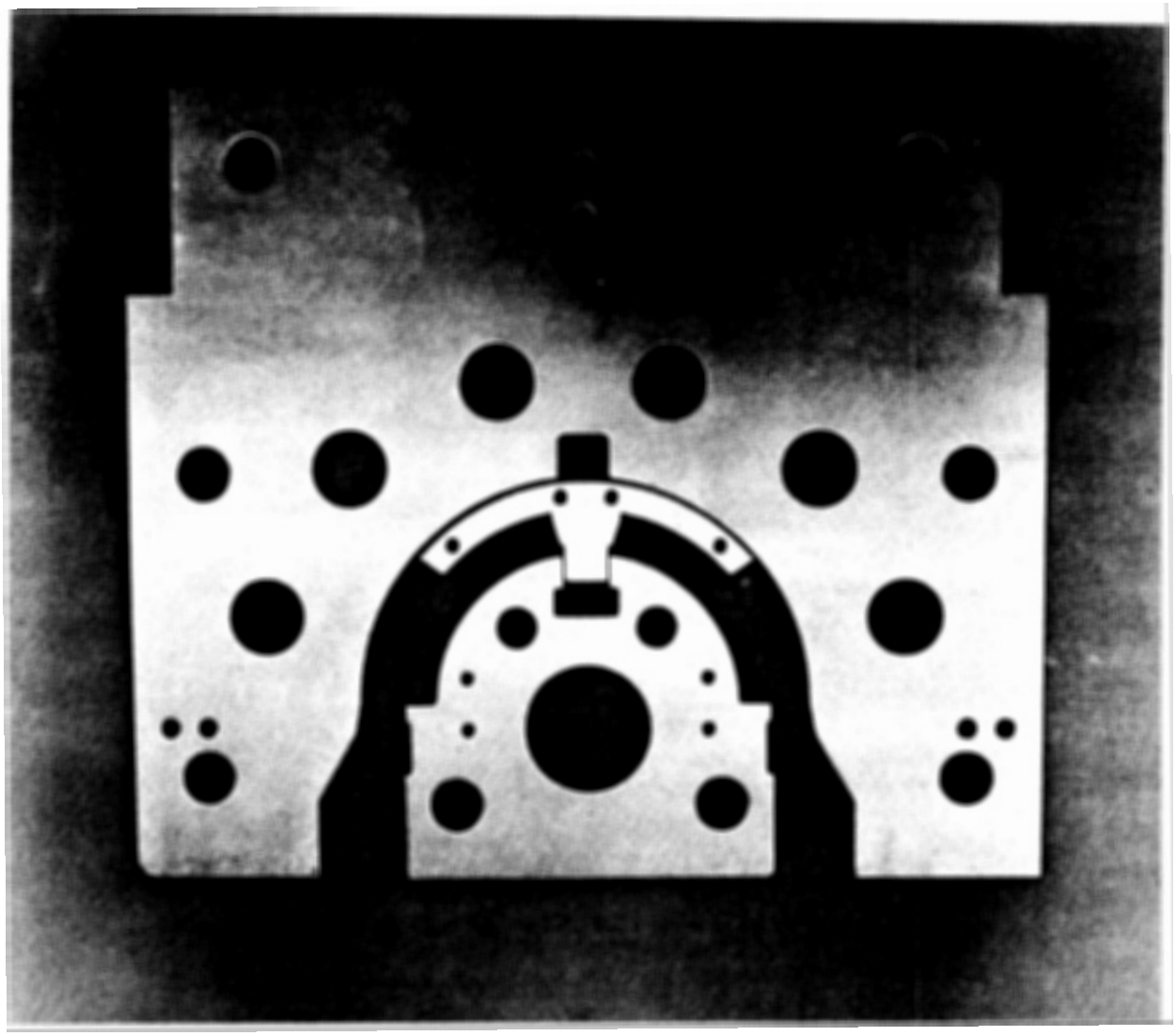

Fig. A-II-1 Collection of Laminations

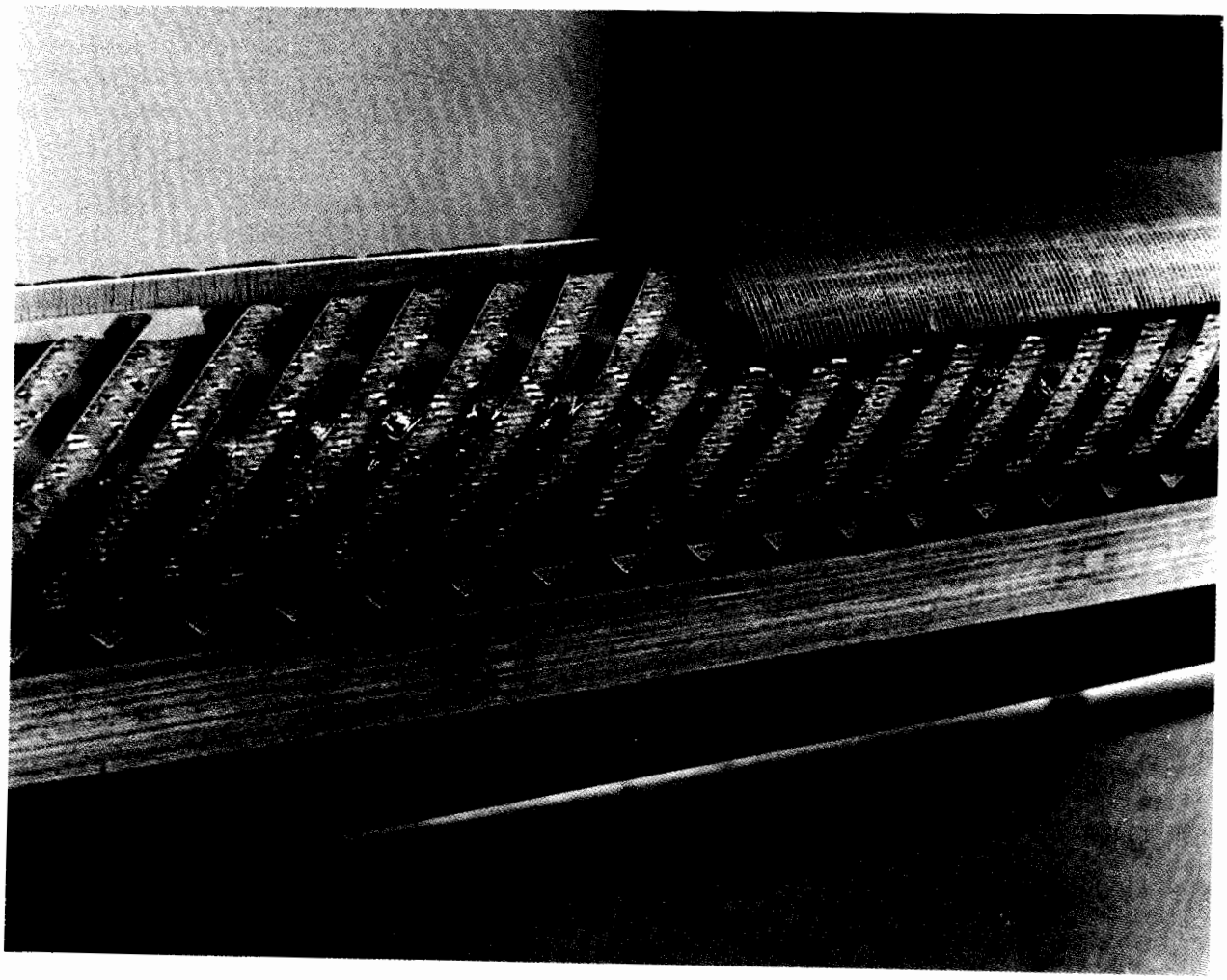

Fig. A-II-2 Laminated tooling prior to winding second Shell

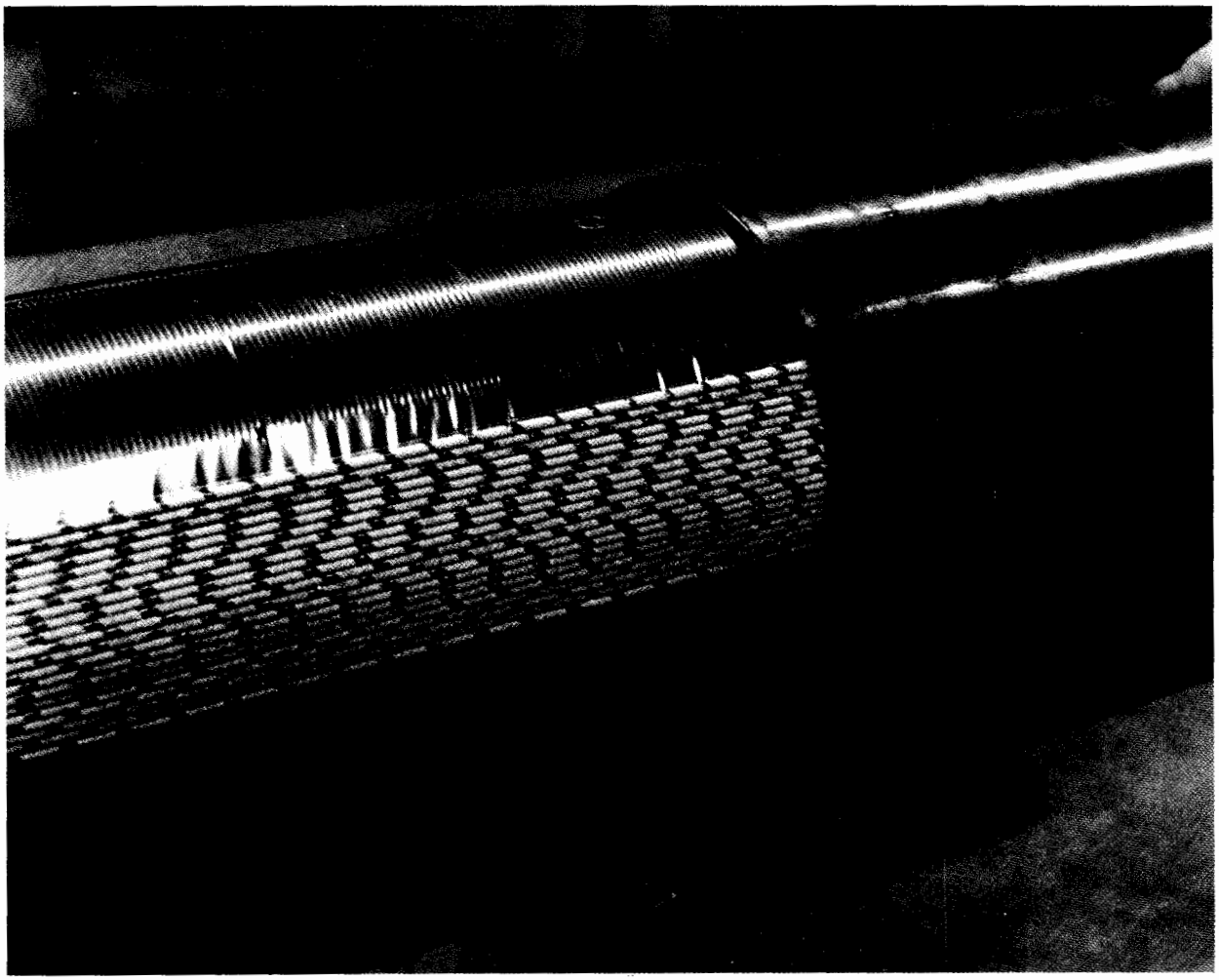

Fig. A-II-3 Completed Winding ready for curing

APPENDIX III. COIL-SIZE MEASUREMENTS

K. Koepke

To assure that the collared coils end up with the desired conductor placement and adequate preload, the coils are subjected to a battery of physical measurements during their construction. This task has been simplified by the adoption of the type-4 coil-clamp collar. The collar gives a rigid, precise radial and azimuthal outer boundary to the coils, leaving only the parting line (dipole median plane), the bore and the azimuthal conductor-distribution positions to be determined by the initial size of the coils.

The inner dipole coil is most susceptible to azimuthal conductor-placement error as 35 turns are molded in one step. The conductor distribution within the inner dipole layer has been measured several times using X-ray photography on individual coils and optical measurements on cross sections of assembled coils. The measurements indicate that the conductors are evenly distributed within the coil and have a random position error relative to the correct position with a standard deviation of 0.003 in., as shown in Fig. 1. For the outer dipole coils, this error is smaller, because of the smaller number of conductors present.

The bore dimension of the magnet is determined by the wall thickness of the coils and the radial component of the Lorentz force. Wall-thickness measurements of the coil shells are readily performed and have a standard deviation of 0.001 in. During operation, the coils are driven into intimate contact with the collar by the Lorentz force. Simultaneous strain-gauge measurements on the outside diameter of the collar and the inside diameter of the coils have shown that the radial compression of the coils is less than 0.001 in. and that the overall motion of the coils due to the flexure of the collar is within acceptable limits.

The parting line is determined by the relative azimuthal sizes of the mating upper and lower coil sections. To measure this azimuthal mean arc length, special gauges shown in Fig. 2,

were constructed for each coil layer. The gauges clamp onto molded coils shown in Fig. 3 by means of a hydraulically actuated pedestal. The Young's modulus of the coil under compression, and the coil size as a function of applied force can be obtained by monitoring the hydraulic pressure and the pedestal position.

The azimuthal coil-size measurements indicated that the compressive Young's modulus of the coil is too low to limit the azimuthal coil motion unless the coils are preloaded by the collar clamps during assembly. In the case of the inner dipole coil, this preload equals 3000 lb per inch of coil, half of which is removed by the differential shrinkage of the coil relative to the collar during cooldown. Azimuthal conductor-motion measurements on energized coils have confirmed that this preload is sufficient to limit the motion of the conductor next to the collar key to approximately 0.0015 in.

The azimuthal preload is obtained by molding the coils oversize relative to their final size when collared. Figure 4 shows the inner coil-size measurements for the most recently produced dipoles, which are scheduled to be installed in the tunnel for the sector test. The maximum average parting-line position error is seen to be 0.004 in.

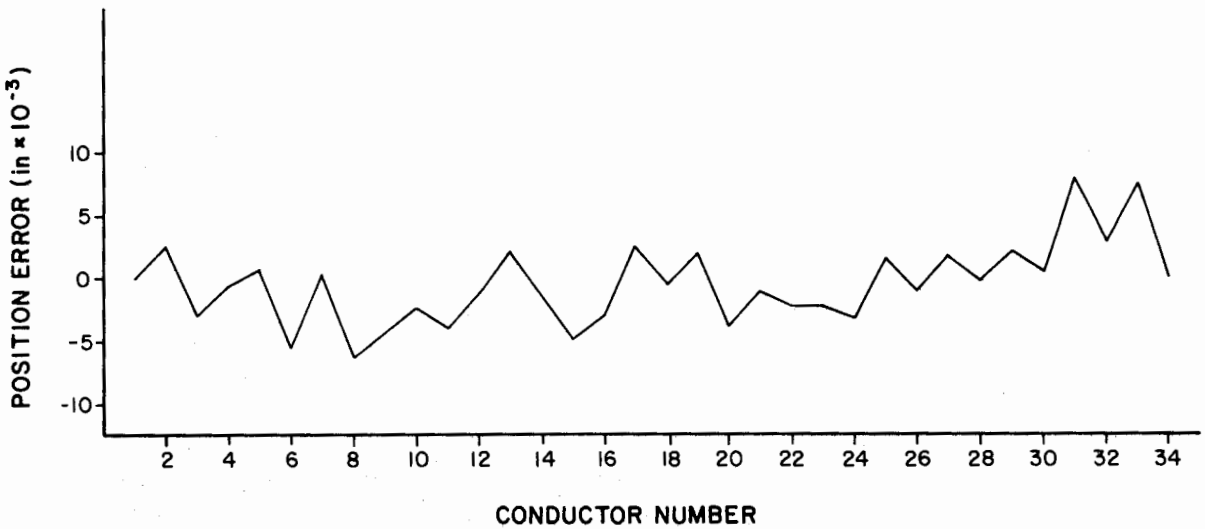

Fig. A-III-1 Dipole E22-32 inner coil conductor placement error.

Fig. A-III-2 Special Gauge to measure mean arc length

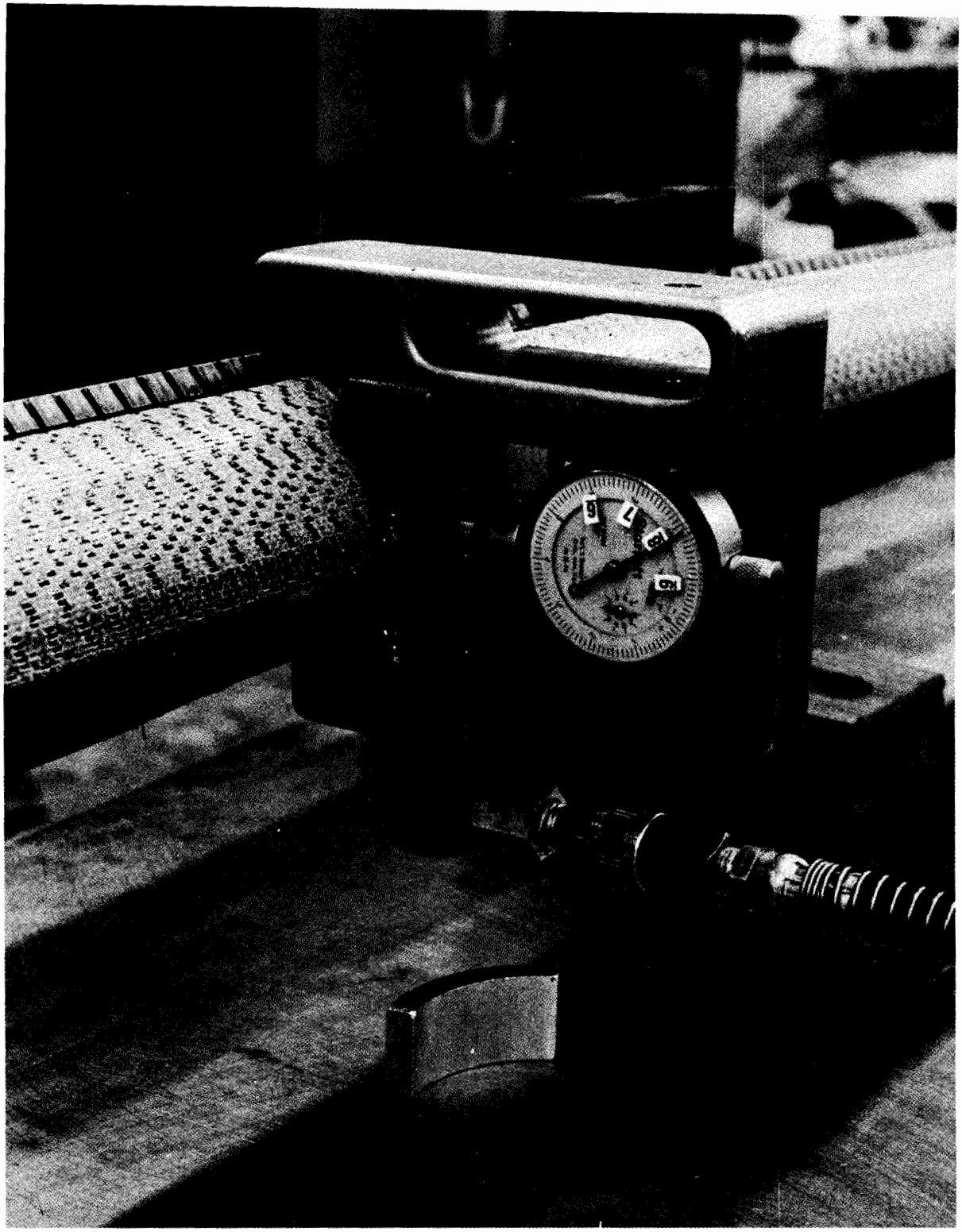

Fig. A-III-3 Special Gauge in use

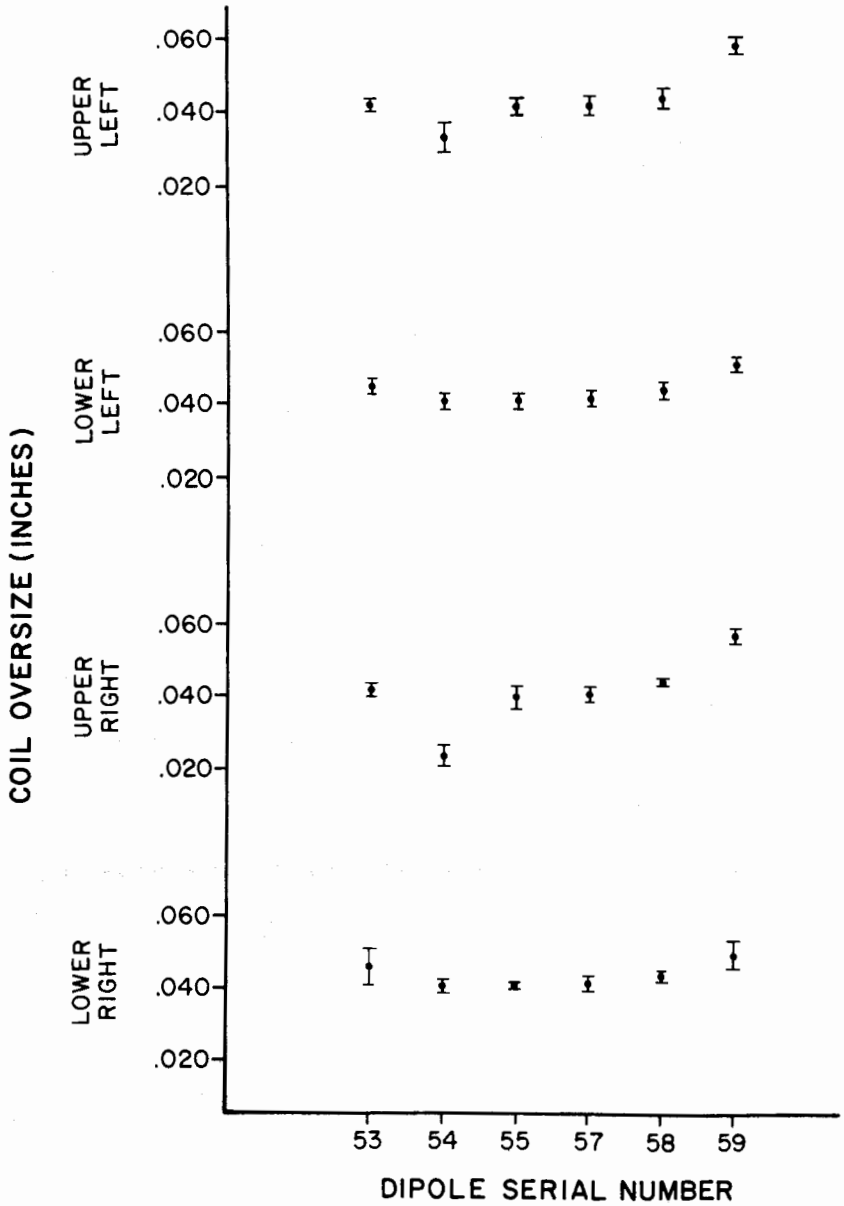

Fig. A-III-4 Average oversize for six production dipoles measured with azimuthal coil gauge. Error bars are standard deviation of eleven measurements along length of coil.

APPENDIX IV. SECTOR TEST DEMONSTRATION

J. R. Orr

In order to have confidence that the installation and commissioning of the Energy Saver can be accomplished without interference with the Fermilab research program, a sector-test demonstration has been planned. This demonstration will consist of installing one-sixth of the super-ring magnets and their associated cryogenic system. All aspects of the sector will be as realistic as possible, including quadrupole magnets, correction magnets, beam sensors, and so forth. Sector A has been choosen for the demonstration and initial installation trials at A-16 have already begun.

After the A-Sector installation is complete, 100-GeV protons will be extracted from the Main Ring at the present extraction point near A0, transported through more than 3100 ft of superconducting magnets, and re-injected into the Main Ring.

Three satellite refrigerators located above the Main Accelerator tunnel near the beginning, middle and end of the sector will supply liquid helium to the string of superconducting magnets. The sector magnets will be excited by a power supply located in Service Building A1 near the upstream end of the sector.

This exercise will allow us to test and improve our installation, alignment and leak-checking procedures and test our refrigeration, vacuum, power supply, quench protection, control, and beam detection systems.

Beam will be extracted from the present Main Ring, directed downward at an angle of 14.7 mrad, redirected into a horizontal direction at an elevation 25 in. below the Main-Ring beam-line and transported to the upstream end of the superconducting sector using conventional electromagnets. In order to make room for this new beam line, the supports under all nine of the present extraction C and H magnets must be changed. A similar conventional magnet system will be used to reinject the protons into the Main Accelerator at the other end of the sector.

The installation of all of these magnets is an interesting challenge because it must be accomplished without interrupting the normal accelerator operating schedule. This means that all work in the tunnel must be accomplished during regularly scheduled maintenance periods. Specifically, all magnets will be installed during weekly eight-hour maintenance days and longer shutdowns scheduled for other reasons. In order to meet this goal and keep pace with our anticipated magnet production schedule, one crew must install four superconducting dipoles and one quadrupole in an eight-hour period.

Installation proceeds as follows: First, two of the five Main-Ring dipole supports are replaced for each four dipole string. These two substitutions are made for two different reasons. The support between the third and fourth Main-Ring dipoles must be changed because the top horizontal spreader bar is too thick to accommodate the connection box at the downstream end of the superconducting dipole directly beneath it. The replacement support has a spreader bar which is 3/4 in. thinner. Substitution of the Main Ring magnet support between the second and third dipoles is required because the electrical, helium and vacuum connections on the corresponding superconducting magnets fall directly inside this stand, making them extremely difficult to reach. The replacement unit is a "pivot stand" with a vertical support column that will pivot out of the way to give access to the connections.

The last step of the support replacement operation is to recheck the alignment of the Main Accelerator dipoles which are on the new stands.

The stands which have been removed are sent to the hot shop where their spreader bars are milled out and then cycled back into the Ring.

Figure 1 shows one of the temporary jacks used to take the weight of a Main Ring dipole while an old support is being removed and a new one inserted. Figure 2 shows a "pivot stand" between dipoles 2 and 3 and Fig. 3 is a view of a milled-out Main Ring support between dipoles 3 and 4 of a four dipole string.

Fig. A-IV-1 Temporary Jacks to hold Main Ring Magnets

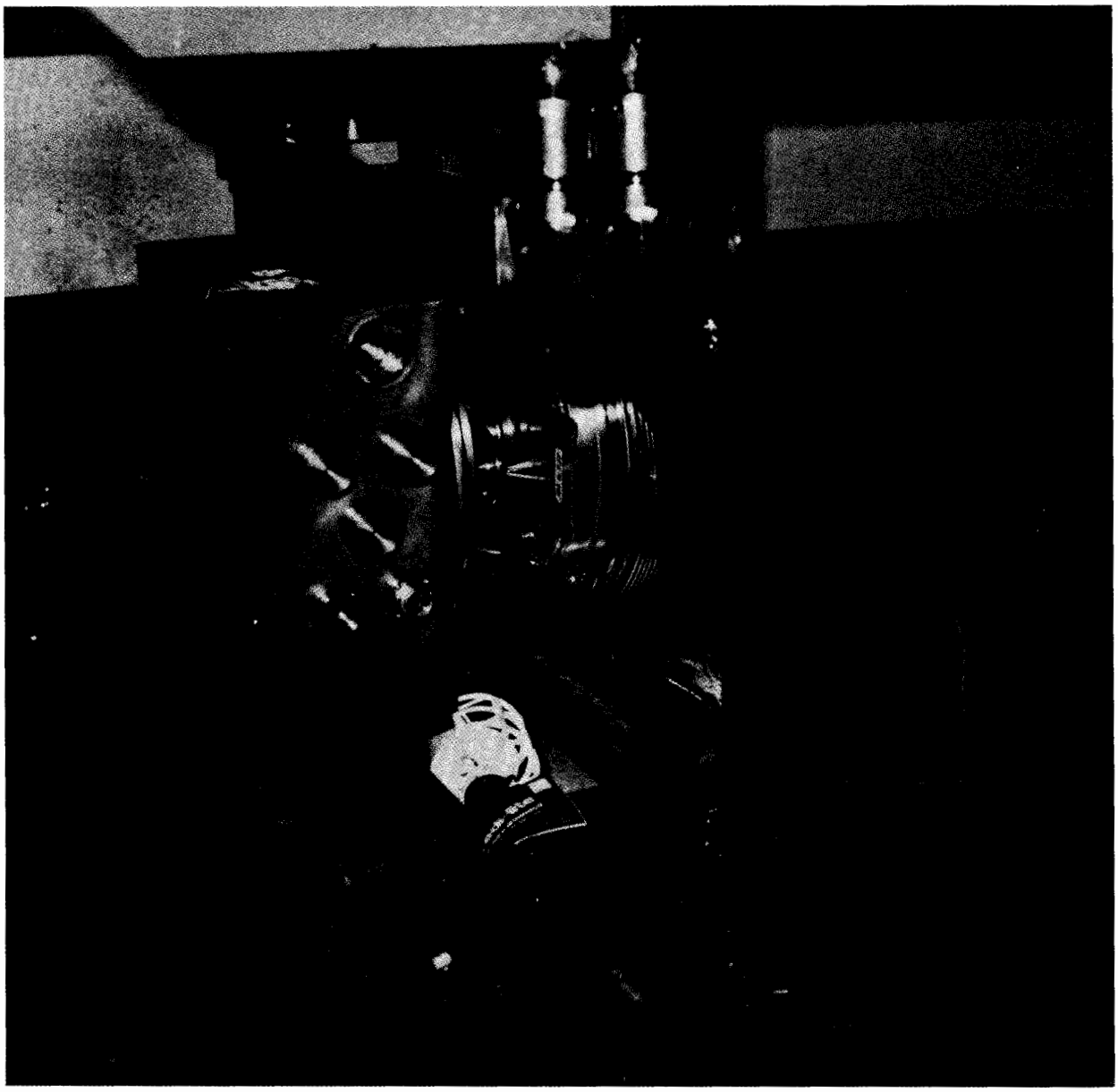

Fig. A-IV-2 Pivoted Stand

Fig. A-IV-3 View of milled out Main Ring Support

The next operation is to survey and mark the locations of the Saver magnet supports and then fasten them to the tunnel floor. (All measurements are made with respect to the Main Accelerator quadrupoles.)

Next, the superconducting magnets are brought into the tunnel through a Minor Vehicle Access, taken to the installation location and lowered onto their supports. Pins on each support mate with holes that have been drilled into the bottom of the magnets. The fine alignment of the magnets is accomplished by using the horizontal and vertical adjustment screws built into the supports. Figure 4 is a view of a set of the Energy-Saver magnet supports.

After a pair of magnets has been placed, a team of two technicians makes the helium, nitrogen, vacuum, and electrical connections. Figure 5 shows a technician connecting two magnets.

A test installation of four superconducting dipoles in the tunnel demonstrated that all of the installation steps up to the point of actually connecting the magnets went very rapidly. The connection process, however, took two technicians an average of 2.5 hours per set of connections. As a result of this experience, new tools have been designed to reduce this time considerably. Figure 6 shows the four-dipole test string in place.

A final problem is leak-checking. Although the seals are well-designed and can usually be connected without leaks, an installation error could result in a leak that would be difficult to find. We have designed two sets of fixtures to alleviate this problem. One is a double seal with a capillary between the seals to allow testing of the inner (important) one. The second fixture allows us to isolate each of the gas, liquid and vacuum circuits for independent tests. Both methods will be tested above ground and if the tests are successful, will be used in the tunnel.

After significant fractions of the sector have been installed, the magnets will be cooled, excited and used to transport beam to a dump in order to ensure that the installation to that point has been done correctly.

At present, the status of the Sector A installation is as follows: Eight of the conventional magnets needed to inject beam into the superconducting sector have been moved into the Transfer Hall. Two special Lambertson Septa needed for the extraction of 100-GeV beam and injection into the sector have been designed. Tooling and parts are on order. The first satellite is in place at Service Building A1. The helium-transfer line from the refrigerator to the tunnel has been installed. Four superconducting dipoles have been installed in the tunnel at A16 as a test of our installation procedures. There was no disruption of the accelerator schedule.

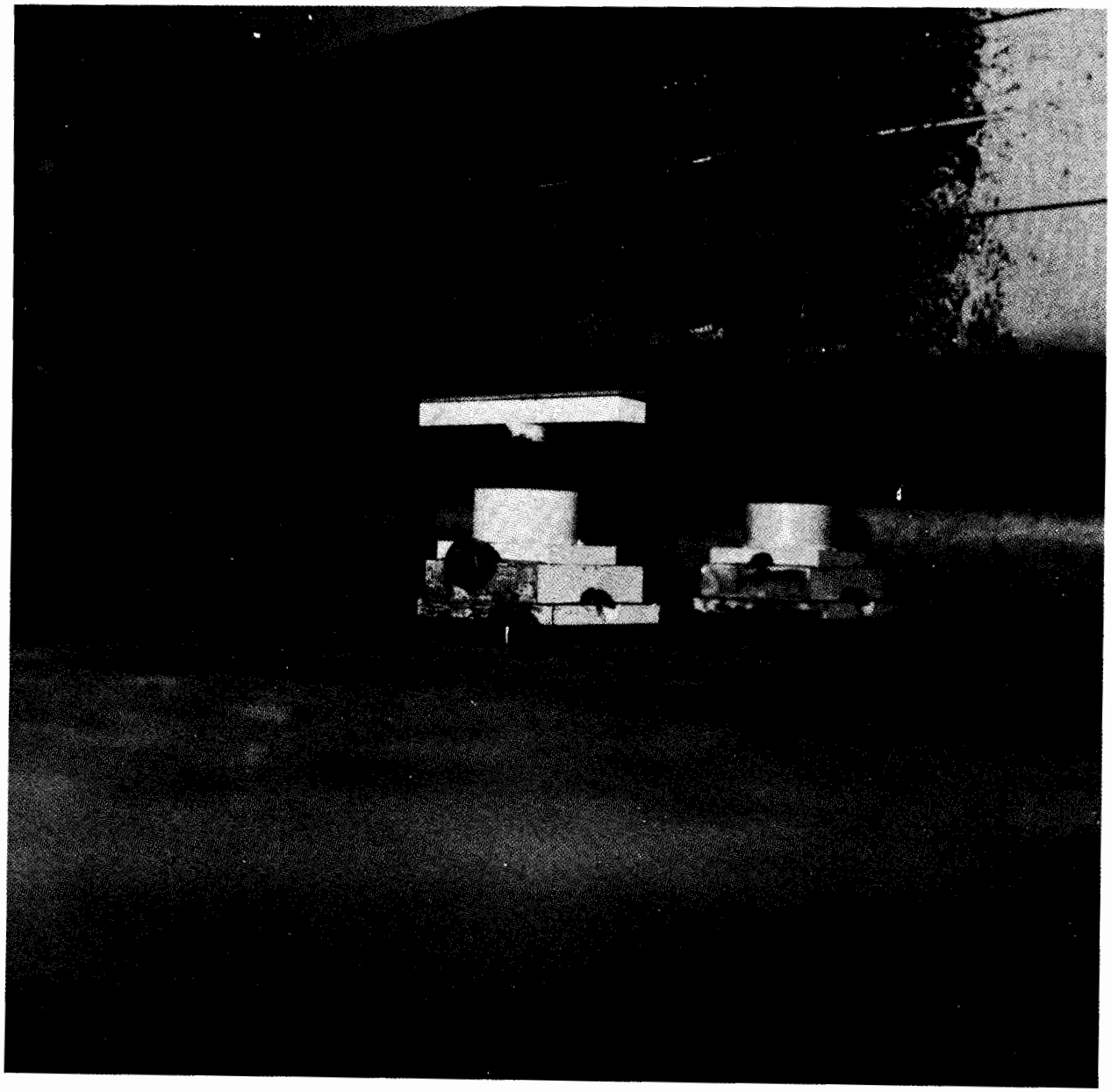

Fig. A-IV-4 Energy Saver Magnet Supports

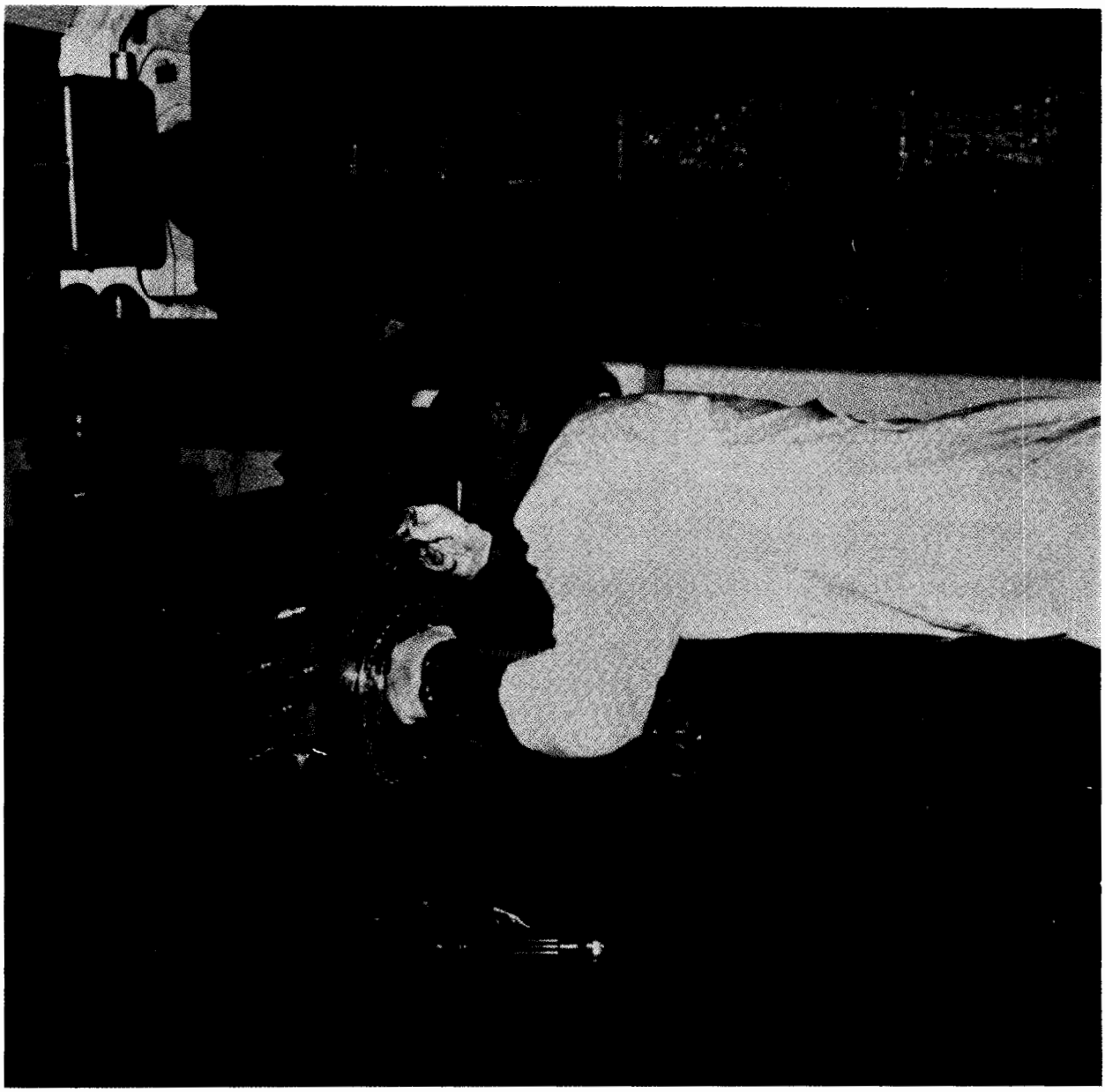

Fig. A-IV-5 Technician connecting Magnets

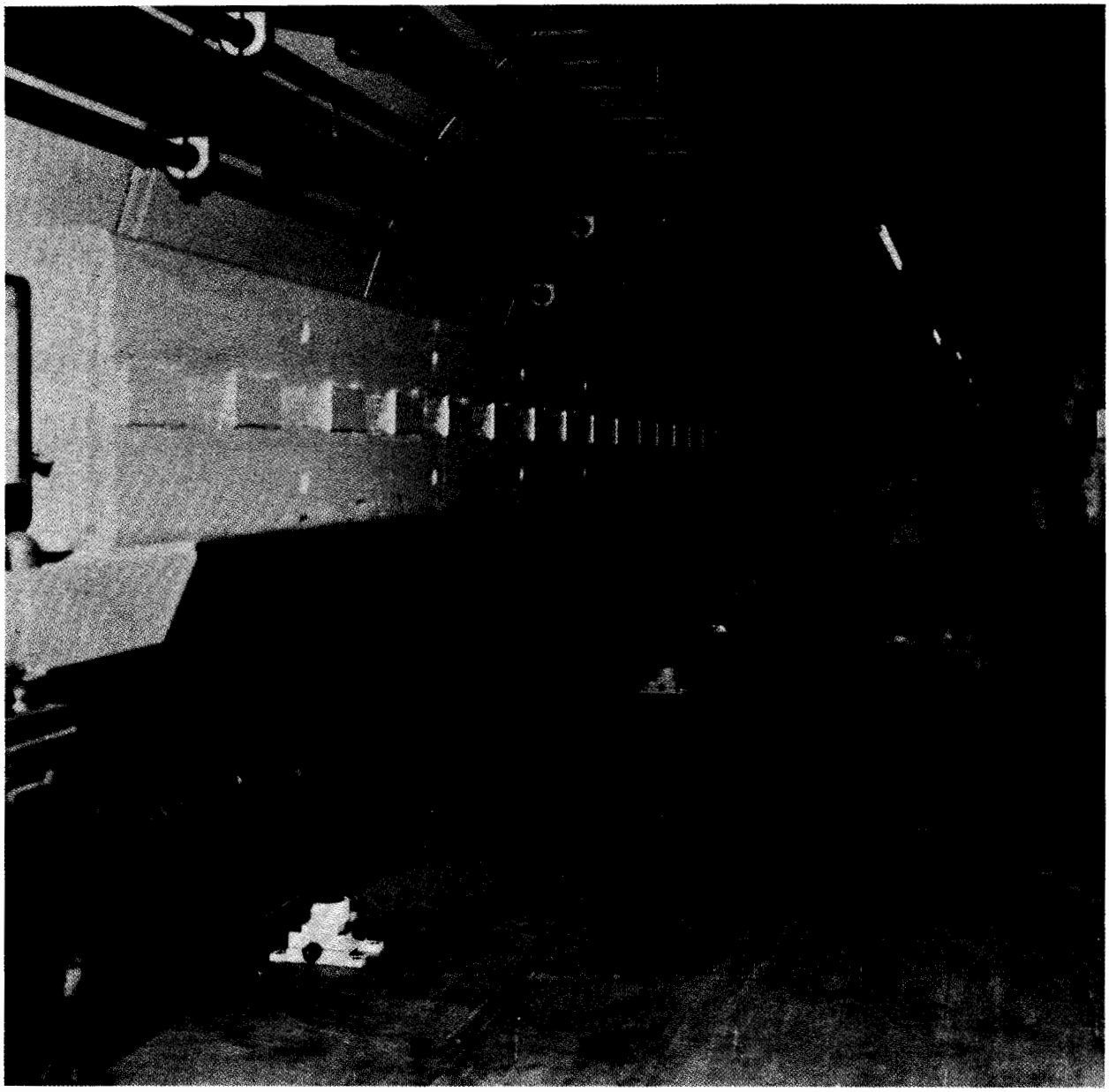

Fig. A-IV-6 Four Magnet Test String in place