FERMILAB-CONF-16-242-TD
ACCEPTED

Superconducting Focusing Lenses for the SSR1 Cryomodule of PXIE Test Stand at Fermilab

J. DiMarco, M. Tartaglia, and I. Terechkine

***Abstract*— Five solenoid-based focusing lenses designed for use inside the SSR1 cryomodule of the PXIE test stand at Fermilab have been fabricated and tested. In addition to a focusing solenoid, each lens is equipped with a set of windings that generate magnetic field in the transverse plane and can be used in the steering dipole mode or as a skew quadrupole corrector. The lenses will be installed between superconducting cavities in the cryomodule, so getting sufficiently low fringe magnetic field was one of the main design requirements. Beam dynamics simulations indicated a need for high accuracy positioning of the lenses in the cryomodule, which triggered a study towards understanding uncertainties of the magnetic axis position relative to the geometric features of the lens. This report summarizes the efforts towards certification of the lenses, including results of performance tests, fringe field data, and uncertainty of the magnetic axis position.**

***Index Terms*—superconducting magnets, focusing lenses, magnetic field, magnet alignment, superconducting linac.**

I. Introduction

The use of superconducting solenoids as focusing elements in low-energy sections of superconducting proton linacs became standard practice in accelerator technology because these provide sufficiently strong axially symmetric focusing while using relatively small longitudinal real estate. Examples of using these devices include ISAC-II linear accelerator at TRIUMF [1], superconducting linac for rare isotope beams acceleration [2], superconducting linac of the SOREQ Applied Research Accelerator facility in Tel-Aviv, Israel [3], and the linac for the HINS experiment at FNAL [4], [5]. The real estate factor becomes especially important when high intensity proton (or ion) beam is accelerated as stronger focusing is required to overcome space charge effects.

Although in every particular case some unique requirements must be set for the design of focusing lenses, the following set seems to have universal importance:

- Focusing strength of the lenses must meet the requirements of the beam optics.
- High accuracy lens positioning in the beam line is especially important for the high-intensity machines.
- Magnetic field generated by the focusing lenses on walls of superconducting accelerating cavities must be sufficiently low.

In the SSR1 cryomodule of the PXIE test stand at FNAL [6], focusing lenses are placed between accelerating cavities as shown in Fig. 1.

Authors are with the Fermi National Accelerator Laboratory operated by Fermi Research Alliance, LLC under Contract No. De-AC02-07CH11359 with the United States Department of Energy.
Corresponding author is I. Terechkine; e-mail: terechki@fnal.gov

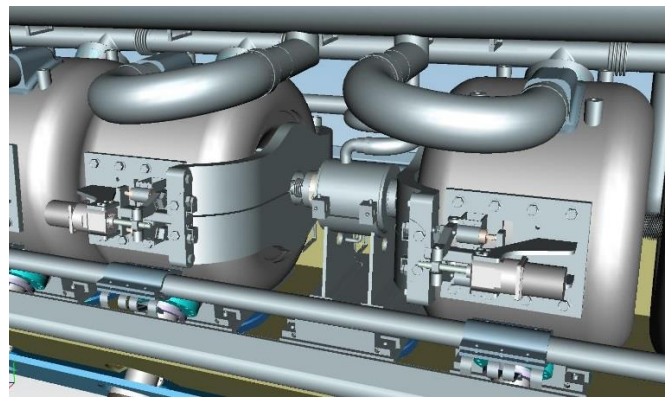

Fig. 1. Focusing solenoid between two cavities in the SSR1 cryomodule.

Each superconducting accelerating cavity is mounted inside a liquid Helium vessel and equipped with a frequency tuner. Each lens has a beam position monitor (BPM) mechanically attached to one of the end flanges and is separated from the beam line by two bellows that ensure a possibility for the lens position adjustment. As a result, there is quite a limited space remaining for the focusing lens itself, especially if to take into account the first of the following requirements for this specific (SSR1) lens:

- Focusing strength of lenses, defined as $S = \int B^2 dx$, must be greater than 4 $T^2 \cdot m$.
- Magnetic axis of the lenses must be positioned on the beam line with 0.2 mm RMS accuracy in the transverse direction; the direction of the magnetic axis must be within 1 mrad RMS from that of the beam line.
- Magnetic field on walls of superconducting cavities must not exceed 5 G.

The last requirement resulted from a study which goal was to understand the extent of degradation that the SSR1 superconducting accelerating cavity can experience after quench in the fringe field of a magnet. This study was summarised in [7]. It was found that quality factor of the cavity after quenching was fully defined by the level of the static magnetic field near cavity walls and by the level of the RF magnetic field at the place where the quench was initiated. Quantitatively, it was the magnetic flux trapped in the cavity walls after quench that defined the new level of the quality factor. The trapped magnetic flux that reduces the unloaded quality factor Q_0 to the level $Q_1=\eta \cdot Q_0$ can be found using the next expression [8]:

$$\Phi_{tr}(Wb) = 6.7 \cdot 10^{-6} \cdot \frac{1}{\Lambda} \cdot \frac{1-\eta}{\eta}, \qquad (1)$$

where Λ is a ratio of the magnetic energy density at the location of the quench and the average energy density in the cavity. It was shown in [8] that for the SSR1 cryomodule that contains eight cavities, a factor of two drop in the quality factor ($\eta = 0.5$) in two cavities can be tolerated both by the RF system and the cryogenic system of the cryomodule. In this case, the magnetic field on the walls of the SSR1 cavity at the locations most vulnerable to quench (that is where the RF magnetic field is the strongest) did not exceed 5 G before quenching. In the middle of the SSR1 cryomodule, cavities are positioned symmetrically relative to the median plane of the lens as shown in Fig. 2. At the front end, the first SSR1 superconducting cavity follows the first focusing lens.

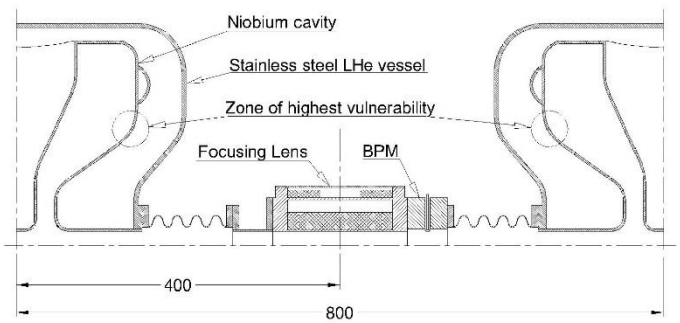

Fig. 2. Focusing lens in the beamline of the cryomodule; dimensions are in millimetres.

It is worth mentioning here that the 5 G allowed level of the magnetic field is two orders of magnitude greater than what was required by the HINS linac specifications and reported as feasible in [4]. Significant simplifications in the magnet design and elimination of the soft-steel flux return followed as a result.

Design and fabrication of the SSR1 focusing lens was outsourced to Cryomagnetics, Inc. The design concept and test results of the prototype SSR1 focusing lens were reported at the ASC 2014 conference [9]. The "focusing" part of the lens contains one solenoid-type "main" coil that provides needed focusing strength and two "bucking" coils introduced and configured to bring the fringe magnetic field on walls of the SSR1 cavities to the desired level. Four additional windings in the radial gap between the main coil and the bucking coils are added to generate transverse magnetic field. They can be used as a combination of two steering dipoles and a skew quadrupole needed for compensation of the quadrupole component of the RF field of the SSR1 spoke-type cavity. Required bending field integral in the dipole mode is $2.5 \cdot 10^{-3}$ T·m.

Mechanical design of the lens was aimed at ensuring precise location of all the coils and minimizing the deformation which results from the welding used in the final assembly step, where the shell of the liquid Helium vessel is added. Results of the magnetic axis position measurements in the prototype lens at the vendor's site and at Fermilab have confirmed the effectiveness of the chosen design approach. Tests summarized in [9] also confirmed that the lens does provide desired focusing strength, reaches theoretical value of the quench current, and that the spatial distribution of the magnetic field is close to the optimal. It was shown also that the observed deviation from the optimal field distribution was due to some imperfectness in the bucking coil windings; this imperfection was greatly reduced in the rest of the magnets where the winding protocol strictly followed the requirements of the magnetic design.

A set of four "production" focusing lenses was fabricated at Cryomagnetics, Inc. In this report, we summarize results of acceptance/certification tests made at the vendor's site and at Fermilab.

II. SSR1 Focusing Lens Fabrication

A. *Fabrication Steps*

Quality control was an essential part of the fabrication process. The dimensions of the winding bobbins for the coils and the wound number of turns in each coil were communicated to Fermilab as part of verification/correction procedure. In total five focusing lenses were fabricated, including the prototype lens, which is considered a spare one. In this paper, the lenses are named according to their number in the production series with #1 being the prototype lens. Lens fabrication and testing was executed as follows:

- The prototype cold mass was fabricated and the windings were quench-trained at 4.2 K at Cryomagnetics, Inc.
- Magnetic field distribution in the solenoid was measured at the nominal current and position of magnetic axis was measured using Hall probe method at 4.2 K.
- The prototype cold mass was re-tested at 4.6 K and at 2.16 K at Fermilab.
- Position of the magnetic axis in the prototype cold mass was measured at room temperature using the vibrating wire technique.
- LHe vessel was added to the cold mass by welding to complete the assembly.
- Position of the magnetic axis was re-measured at room temperature using the vibrating wire technique for the finished lens after LHe vessel welding.
- The assembled prototype lens was tested at 4.6 K and at 2.16 K at Fermilab.
- Feedback was provided for the Cryomagnetics team with recommendations to modify some details of the cold mass assembly and the acceptance test procedure.
- Four production cold masses were fabricated at Cryomagnetics, Inc.
- They were trained at Cryomagnetics, Inc in a bath of liquid Helium at 4.2 K; position of magnetic axis of each lens was measured at 4.2 K using Hall probe method.
- Position of the magnetic axis in the magnet #2 was measured at Fermilab at room temperature using vibrating wire technique before and after the final welding assembly operation.
- Each cold mass was assembled with LHe vessels at Fermilab.
- Four production lenses were tested at 2.2 K at Fermilab.

B. *Geometry of the Coils*

The magnetic design of the SSR1 focusing solenoid was optimized to lower fringe magnetic field at the location of the accelerating cavities. Inevitable deviations during fabrication led to some spread of lens parameters. The inner diameter of the main coil of the lens was between 40.16 mm and 40.41 mm (nominal 40.00 mm). The outer diameter of the main coil changed between 81.41 mm and 82.55 mm (nominal 82.5 mm). The length of the coils changed between 110.75 mm and 111.50 mm (nominal 110.81 mm). The number of turns in the coils was between 12428 and 12487 (nominal number of turns 12450). The difference in the number of turns was due to the different lengths of the winding bobbins and variations in the packing factors in the windings.

Diameters and lengths of the bucking coils were also deviating from the nominal values with the total spread of less than 1%. Number of turns in the two bucking coils of each lens were made equal and proportional to the number of turns in corresponding main coils: $N_{main}/N_{buck} \approx 7.8$.

This configuration of the focusing solenoid provides the required focusing strength at I = 65.5 A with the magnetic field in the solenoid reaching 7 T. Inductance of the focusing solenoid with the main coil and bucking coils connected in series is ~2.7 H.

Corrector windings in each lens were fabricated following the next protocol:

- Inside winding radius 47.25 mm
- Outside winding radius 51.56 mm
- Inside winding length 96.16 mm
- Inside winding angle 66^0
- Outside winding angle 88^0
- Number of turns 100

Maximum magnetic field on the strand in the windings of the corrector in the dipole mode and with the required integrated bending strength is ~0.3 T.

III. Performance Test Results

All the coils were wound using round, insulated, 0.4 mm bare diameter strand from Oxford Wire & Cable Company. Critical current of the strand was specified at 4.2 K and recalculated to the test temperatures using parameterization in the form suggested by L. Bottura [10]. Table I compares the calculated and measured quench currents in the main coil of the focusing solenoid at 4.2 K at Cryomagnetics, Inc.

TABLE I
Calculated and Measured Quench Currents at 4.2 K

Magnet	Calculated Current	Measured Current (A)
#1	68.0 A at 4.6 K	67.9 A at 4.6 K
#2	72.5 A	72.5 A
#3	72.3 A	72.4 A
#4	72.8 A	72.7 A
#5	72.9 A	72.6 A

For magnet #1, the quench current was measured at Fermilab at 4.6 K.

In Table II similar comparison is made for the 2.16 K tests made at Fermilab [11].

At 2.15 K, at the quench current, the magnetic flux density on the turns of the main solenoid reaches 9.4 T. As in the prototype, the required focusing strength of 4 T^2·m is reached at 65.5 A; according to Table I, this current can be set even at 4.6 K. The 35% current margin at 2.15 K should ensure reliable performance of the solenoids in the cryomodule.

TABLE II
Calculated and Measured Quench Currents at 2.15 K

Magnet	Calculated Current	Measured Current (A)
#1	90.7 A	91.7 A
#2	89.0 A	89.8 A
#3	88.8 A	89.6 A
#4	89.2 A	90.4 A
#5	89.2 A	91.1 A

The windings of both the horizontal and the vertical steering dipoles were tested at Cryomagnetics at 4.2 K with the current in the focusing solenoid set to the nominal value. The tests were made both for the individual windings and for the windings in steering dipole mode. In the production magnets #2 to #5, no training quenches were observed up to 80 A. The maximum current in the steering windings will not exceed 50 A; 60% current margin provides sufficient operational safety. For the magnet #1 (the prototype system), the steering coils performance tests were made with the maximum current set to 50 A. Although one training quench was observed for one of the windings, this magnet is safe to use in the 2.15 K environment; it will be used as a spare lens.

IV. Magnetic Field Quality

As the level of the magnetic field on the walls of supeconducting cavities of the SSR1 cryomodule is one of the major concerns, each magnet fabricated at Cryomagnetics, Inc. was analyzed in "as-built" configuration:

- Focusing solenoid winding data were used to calculate the axial distribution of the magnetic field and compare it with the results of the magnetic field measurements made at Cryomagnetics, Inc.
- Modeling of the cavity degradation after quenching was made for each focusing lens to confirm that the flux trapping limit defined by the expression (1) is met.

Axial distribution of the field was extensively studied for the prototype magnet. The field measurement data obtained by Cryomagnetics, Inc. was verified by similar measurements at FNAL; both sets of data were compared with results of modeling that used "as built" winding data. The three sets of data were consistent within 0.5%; results were reported in [9].

For this "prototype" system and for the rest of the lenses, the allowed performance degradation condition (1) was checked by modeling using "as built" parameters of the focusing solenoid. With $\eta = 0.5$ and $\Lambda = 2.6$, which corresponds to the points on the SSR1 cavity surface with the highest level of the RF magnetic field, expression (1) can be re-written as a lens acceptance criterion:

$$\Phi_{tr}(Wb) < 2.6 \cdot 10^{-6}\ Wb \qquad (2)$$

Magnetic fluxes trapped in walls of the SSR1 superconducting cavity nearest to one of the focusing lenses are shown below:

- Lens #1 (prototype) $2.2 \cdot 10^{-6}$ Wb
- Lens #2 $3.8 \cdot 10^{-7}$ Wb
- Lens #3 $4.7 \cdot 10^{-7}$ Wb
- Lens #4 $2.2 \cdot 10^{-7}$ Wb
- Lens #5 $4.3 \cdot 10^{-7}$ Wb

For the prototype lens, the acceptance criterion (2) was just marginally met. The maximum value of the magnetic field on the superconducting surface of the nearest cavity was ~5 G in this case. For the rest of the lenses, the trapped flux was significantly reduced after the "as built" study of the prototype lens revealed that deviations in winding of the bucking coil were the reason for the higher than predicted trapped flux. The subsequent lenses built by strictly following the magnetic design had the trap flux much closer to the design value: $\Phi_{tr} \approx 4 \cdot 10^{-7}$ Wb.

V. Quench Protection

Energy stored in the device at the maximum current reaches 11 kJ. If this energy dissipates in one of the bucking coils when it quenches, the average energy deposition in the coil, the mass of which is 220 g, would be 50 J/g. This heat corresponds to the enthalpy of copper at 240 K [12], so this would be the expected average temperature of the coil after quench. The maximum temperature in the quenching coil can be significantly higher, and resulting temperature gradients inside the quenching coil can lead to irreversible damage of the electrical insulation. On the other hand, if a quench happens in the main coil and no quench protection is used, the voltage generated inside the coil can be too high for the insulation to withstand. Quench protection measures must be employed to ensure reliable performance of the device after quenching.

Studies of quench protection options for the SSR1 focusing lens were summarized in [13] where a schematic of a quench protection system was proposed that would ensure safe performance of the lens and removal of the stored magnetic energy outside of the cryomodule after quenching.

The quench protection scheme proposed by the vendor uses cold diodes shunting the windings. Although in this scheme the stored energy is dissipated inside the cryomodule, its simplicity outweighs this drawback. It was tested during performance testing of the lenses at Fermilab [11].

VI. Lens Alignment

Importance of proper alignment of focusing solenoids in a beam line was recognized a long time ago [14]. Also recognized was the importance of knowing position of the effective magnetic axis in solenoid-based focusing lenses [15]. Typical requirements for alignment of the ideal focusing lenses in cryomodules is a quarter of one millimeter in parallel shift and one milliradian in angular uncertainty. For the real devices, position of the magnetic axis relative to its geometric features must be known with even greater precision. Different methods were developed and used to measure this position. In [15], a short pulse of current along a stretched wire induced wire motions that were recorded and analyzed. At Cryomagnetics, Inc., a rotating Hall probe was used to find the position of the magnetic axis projections on the two planes located near the ends of the solenoids; these measurements were made during testing of each lens at 4.2 K. At Fermilab, a vibrating wire technique [16] was used at room temperature. In this case, resonant oscillations were induced in a stretched wire; different modes of oscillations were employed, and position of the stretched wire was adjusted to minimize the oscillation amplitude. This position was used as that of the effective magnetic axis.

Comparison of the axis position measurements in the prototype magnet made by the vendor and at Fermilab was summarized in [17]. The uncertainty of the effective magnetic axis position relative to the geometric axis was found to be ±0.15 mm for the offset and ±0.5 mrad for the inclination angle.

Data obtained at 4.2 K by using rotating Hall probe technique at Cryomagnetics, Inc. summarized in Table III will be used to install the lenses in the cryomodule. The spread in the X and Y position of the points where the effective magnetic axis crosses the probe rotation planes, Z = -64 mm and Z = +64 mm, is consistent with the stated confidence level. Uncertainties related to the fabrication accuracy and the magnetic field measurement techniques are most probable obstacles to a better reproducibility.

TABLE III
Magnetic Axis Position in the SSR1 Focusing Lenses

Magnet	Hall Probe Z-position	ΔX (μm)	ΔY (μm)	dX/dZ (mrad)	dY/dZ (mrad)
#1	-64 mm +64 mm	-93 -24	-54 -135	+0.54	-0.135
#2	-64 mm +64 mm	+39 -64	+67 +45	-0.8	-0.17
#3	-64 mm +64 mm	0 -70	+103 +25	-0.55	-0.61
#4	-64 mm +64 mm	+75 +63	-43 +75	-0.09	+0.92
#5	-64 mm +64 mm	-57 +59	-81 -34	+0.91	+0.37

VII. Conclusion

Five focusing lenses were fabricated for use in the SSR1 cryomodule of the PXIE test facility. All lenses meet the performance requirements, and a cold-diode-based quench protection system was proven to function as required at the maximum current. The fringe field of each of the focusing solenoids satisfies the acceptance criterion that limits performance degradation after SSR1 cavity quenching. The position of the magnetic axis was measured for each lens relative to its geometric axis. Although precision of the measurements is quite satisfactory, the remaining budget of the positioning error in the cryomodule seems low. Configuring the alignment system in a way that provides instant feedback and allows active correction would help to solve the alignment problem. Starting activities in this direction were reported in [18].

REFERENCES

[1] G. Stanford, Y. Bylinsky, R.E. Laxdal, W. Rawnsley, T. Ries and I. Sekachev, "Engineering and cryogenic testing of the ISAC-II medium beta cryomodule," XXII International Linear Accelerator Conference (LINAC 2004), Lubeck, Germany, Aug. 2004, proceedings, pp. 630-632.

[2] J. Kim, D. Gorelov, F. Marti, H. Podlech, X. Wu, and R. York, "Design study of superconducting linac for RIA," 2001 Particle Accelerator Conference (PAC 2001), Chicago, IL, USA, June 2001, proceedings, pp. 1741-1743.

[3] M. Pekeler, K. Dunkel, C. Piel, and P. vom Stein, "Development of superconducting RF module for acceleration of protons and deuterons at very low energy," 2006 Linear Accelerator Conference (LINAC 2006), Knoxville, TN, USA, Aug. 2006, proceedings, pp. 321-323.

[4] I. Terechkine, J. DiMarco, W. Schappert, D. Sergatskov, and M. Tartaglia, "Solenoid-based focusing in a proton linac," XXV Linear Accelerator Conference (LINAC 2010), Tsukuba, Japan, Sept. 2010, proceedings pp. 593-595.

[5] J. DiMarco, E. Khabiboulline, D. Orris, M. Tartaglia, and I. Terechkine, "Superconducting solenoid lens for a high energy part of a proton linac front end," *IEEE Trans. Appl. Supercond*., vol. 23, No 3, 4100905, June 2013.

[6] A. Shemyakin, et al., "Project X injector experiment: goals, plans, and status," 4-th International Particle Accelerator Conference (IPAC 2013), Shanghai, China, proceedings, pp. 1093 – 1095.

[7] I. Terechkine, T. Khabiboulline, and D. Sergatskov, "Performance degradation of a superconducting cavity quenching in magnetic field," 16th International Conference on RF Superconductivity (SRF 2013), Paris, France, Sept. 2013, proceedings pp. 1013-1015.

[8] T. Khabiboulline, T. Nicol, and I. Terechkine, "Acceptable level of magnetic field on the surface of a superconducting RF cavity," FNAL TD note TD-12-008, June 2012.

[9] E. Burkhardt, et al., "Solenoid-based focusing lens for the low-beta section of a superconducting proton linac," *IEEE Trans. Appl. Supercond*., vol. 25, No. 3, 4100104, June 2015.

[10] L. Bottura, "A practical fit for the critical surface of NbTi," *IEEE Trans. Appl. Supercond*., v. 10, No. 1, pp. 1054 – 1057, March 2000.

[11] G. Chlachidze, et al., "Focusing lenses for the SSR1 cryomodule of the PXIE test stand," FNAL TD note TD-15-021, Dec. 2015.

[12] *A Compendium of the properties of materials at low temperature*, NBS, Cryogenic Engineering Lab., WADD Technical Report 60-56, Part II, Oct. 1960.

[13] I. Terechkine, "Quench protection of focusing lenses of the PXIE SSR1 cryomodule," presented at the Applied Superconductivity Conference (ASC 2014), Charlotte, NC, USA, Aug. 2014. Available online: http://lss.fnal.gov/archive/2014/conf/fermilab-conf-14-231-td.pdf. Accessed on Nov. 30, 2016.

[14] J. McAdoo, E. Chojnacki, P. Loschialpo, K. Low, M. Reiser, and J.D. Lawson, "Electron beam transport and emittance measurements in a long periodic solenoid channel," *IEEE Trans. On Nuclear Science*, vol. NS-32, No. 5, pp. 2632 – 2634, Oct. 1985.

[15] C. Bonnafond and D. Villate, "Alignment techniques for the high current AIRIX accelerator", 1999 Particle Accelerator Conference (PAC 1999), New York, NY, USA, March 1999, proceedings, pp. 1381–1383.

[16] A. Temnykh, "Vibrating wire field-measuring technique," *Nucl. Instr. and Methods in Physics Research A*, vol. 399, pp. 185-194, 1997.

[17] J. DiMarco, I. Terechkine, and V. Bocean, "PXIE SSR1 prototype focusing lens: position of the magnetic axis," FNAL TD note TD-14-004, May 2014.

[18] W. Schappert, "First test of a prototype optical system for the HINS focusing solenoid alignment study," FNAL TD note TD-09-015, Aug. 2009.