FERMILAB-PUB-15-410-A

Exotic Rotational Correlations in Emergent Quantum Geometry

Craig Hogan
University of Chicago and Fermilab Center for Particle Astrophysics

Estimates are presented of exotic, purely rotational correlations that arise in large systems if directions in space-time emerge from Planck scale quantum elements with no fixed classical background space. In the time domain, directions to world lines at finite separation R from any world line coherently fluctuate in the classical (that is, $R \to \infty$) inertial frame, on a timescale R/c, by an angle of order $R^{-1/2}$ in Planck units. The exact exotic correlation function is computed for the signal in a Sagnac type interferometer of arbitrary shape. The signal variance is equal to twice the enclosed area divided by the perimeter, in Planck units. It is conjectured that exotic Planck scale rotational correlations, entangled with the strong interactions, determine the value of the cosmological constant. Cosmic acceleration may be viewed heuristically as centrifugal acceleration by rotational fluctuations of the matter vacuum. An experiment concept is sketched, based on a reconfiguration of the Fermilab Holometer.

arXiv:1509.07997v1 [gr-qc] 26 Sep 2015

I. INTRODUCTION

It seems unvaoidable that new exotic correlations— beyond standard predictions based on continuous, infinitely divisible space and time— should occur if geometry is assembled from discrete elements at the Planck scale, or otherwise has Planck scale bounds on the number of degrees of freedom, as occurs in many theories of quantum gravity. Still, in the extensive literature on quantum extensions of general relativity[1–7], there is no generally accepted theory about the character of exotic quantum-geometrical correlations in large systems.

Exotic correlations refer to quantum correlations of geometry itself: that is, quantum geometry produces spatially coherent phase displacments in quantum matter fields, and consequently on world lines of massive bodies. This kind of correlation is predicted to be negligible in standard field theory[8, 9], or in other theories of Planck scale effects[10–14], such as string theory, that assume relativistic quantum fields in a fixed classical background space-time on large scales. Some kinds of exotic correlations can be described by phenomenological models based on assumed spectra of fluctuations in the metric[15–18]; many of these are now ruled out by experimental bounds[19].

Significant exotic correlations could however arise naturally in relational theories, where space-time emerges from a quantum system of Planck scale elements. In these theories, there is no *a priori* background space-time; all geometrical relationships are derived from elements of a discrete quantum system. At least one well-studied formalism, Loop Quantum Gravity, or Canonical Quantum General Relativity[1–3], predicts a quantized spectrum of geometrical area states that extends to large systems, which appears to imply new exotic positional correlations. However, there has been no generally accepted model to connect them with actual physical observables.

The aim of this paper is to create a precise, if still partly heuristic phenomenological model of concrete observables in this class of theories. Physical constraints such as causality and approximate covariance in the emergent system strongly constrain the structure of correlations, and allow remarkably precise predictions of exotic signal correlations in some types of apparatus. This model will help to design and interpret experiments to seek concrete evidence that space-time is indeed a quantum system composed of Planck scale elements.

The model is based on the hypothesis[20–24] that exotic correlations of geometry display a particular directional spatial projection pattern, always transverse to separation from the world line of an observer. This form of exotic Planck correlation is not describable by metric fluctuations, but is motivated by the concept of emergent space-time, in which a geometrical quantum state hierarchically unfolds in projections determined by causal structure around the world line of any observer. The amplitude of the correlation can be estimated in various ways summarized below of combining quantum theory and gravitation, including but not limited to Loop Quantum Gravity. The Planck quantum limit on directional information imposed by gravity can lead to a new form of "holographic noise" in the signals of interferometers. It is not ruled out by any experiment to date, but may be measurable with targeted experiments, such as the Fermilab Holometer, that sample "superluminally", that is, faster than an inverse light crossing time.

This paper studies particular observable consequences of a restrictive and precise form of this hypothesis: that exotic transverse correlations appear as purely rotational modes in the emergent space (Eq. 30), associated with emergence of the classical non-rotating inertial frame from the Planck scale. The purely rotational symmetry, and holographically bounded information content, considerably restricts the range of possible phenomenology, and leads in some situations to unique predictions.

It is argued that such exotic rotational correlations should arise if space emerges relationally from Planck scale elements, with no fixed background. In classical relativity, or any field theory embedded in a fixed classical background space, any change in directional orientation between two world lines is defined relative to an absolute, locally defined

Operated by Fermi Research Alliance, LLC under Contract No. De-AC02-07CH11359 with the United States Department of Energy

nonrotating frame. This inertial frame is exactly defined in principle, even on infinitesimally small scales. Of course actual physical systems are subject to quantum limits on what can be measured, but in standard theory, measurement of the inertial frame is limited by standard quantum mechanics[25], not by any limitation of geometry itself. If space itself is not a smooth classical manifold, but is a quantum system made of Planck scale elements, the situation on the Planck scale may be radically and qualitatively different from this standard theory. Classical directions on the smallest scales may not exist, since classical space emerges only as an approximation in large systems. As one approaches the position of a world-line, the non-rotating frame is less and less well defined relative to the classical frame. There is no such fundamental thing as an unchanging direction, and all observable quantities at the Planck scale, including direction, fluctuate wildly at the Planck frequency. In this case, small amplitude exotic rotational fluctuations— coherent changes in direction about a given world line, relative to the classical inertial frame— should also occur for separations and durations much larger than the Planck scale. Estimates of their statistical properties based on Planck scale holographic information content (Eq. 22 below) suggest that exotic rotational fluctuations in large systems are indeed very small, but much larger than in standard theory. One can heuristically picture the correlations as arising from rotational quantum-geometrical or holographic noise in the inertial frame: spatially coherent fluctuations in direction that get smaller, slower and gentler on larger scales.

Some precise quantitative observable consequences of such exotic rotational fluctuations, and their associated exotic correlations, are calculated here. It is argued that they should appear in signals of interferometers, but only those in which which light travels in a circuit that encloses a large area, such as a Sagnac type[26, 27]. An exact correlation function for the signal is computed here from general principles, for a Sagnac interferometer of any shape (Eq. 39). The variance in the signal is equal to twice the area enclosed by the light path, divided by the perimeter, in Planck units. One precise normalization is provided by the area quantization spectrum of Loop Quantum Gravity.

These exotic rotational correlations could be measured by a device in a Sagnac configuration, with similar sensitivity to that already demonstrated by the Fermilab Holometer[28]. A specific experimental concept is sketched as an example: for a square configuration 20 meters on a side, the computed spectrum predicts an interferometric phase shift jitter with an rms amplitude of 11 attometers, at a frequency of 3.7 MegaHertz.

Going beyond the precise treatment of exotic interferometer correlations, the behavior of exotic rotational fluctuations suggests an intriguing connection: the possibility that entanglement of the matter vacuum with exotic rotational geometrical correlations could shape emergent geometry on cosmic scales. In particular, we conjecture that the value of Einstein's cosmological constant Λ is fixed by the scale where the average effects of exotic Planck rotational fluctuations entangle significantly with the strongly self-interacting matter vacuum. The spatial amplitude of exotic Planck correlation matches the strong vacuum correlation length Λ_{QCD}^{-1} at a radial separation of about 60 km. Rotational fluctuations at that separation produce a root-mean-square virtual angular rotation rate— and heuristically, a universal rate of mean centrifugal acceleration— about equal to the observed rate of cosmic acceleration. It is shown below that within current experimental errors, the density of positional information is the same for cosmic expansion and the strong interactions. In this scenario, the value of the cosmological constant in the emergent geometry depends only on known scales of gravity and the Standard Model.

II. ESTIMATES OF EXOTIC QUANTUM GEOMETRICAL CORRELATIONS

Planck Scale Correlations in Large Systems

The content of a quantum theory can be expressed as correlations between observable quantities[29, 30]. In standard physics, matter is a quantum system, while geometrical relationships are classical. However, it is generally thought that a quantum system also underlies space and time[1, 2]. If so, the background quantum geometry should also produce quantum correlations among observable quantities, beyond those of quantum matter.

Quantum correlations have an inverse relation to the information in a system: they vanish in the limit of a continuous classical system, which has an infinite amount of information. Theoretical extrapolations from standard theory suggest that quantum gravity limits the amount of information available to a system of matter and geometry, and therefore, creates new forms of correlation not predicted in standard theory. However, it is not known what form those correlations take.

Here we consider the hypothesis that quantum-geometrical correlations can be expressed as exotic correlations in the spatial positions of world lines, as traced by trajectories of massive bodies. These correlations can be distinguished from standard quantum correlations by precise measurements of positions of bodies in space. They carry significant, specific and quantitative information about the structure of new physics at the Planck scale.

We have previously considered one class of such measurements, those possible with Michelson interferometers[19–23]. Here, we consider a related but different class of possible correlations, associated with rotational modes, or pure changes of direction in space. In particular, we argue that measurements sensitive to the phase of radiation that

travels in a closed circuit, as in a Sagnac interferometer, may detect correlations due to the imperfect emergence, in a laboratory-scale system, of a local nonrotating frame from quantum relationships of Planck scale elements.

In an interferometer, a quantum-geometrical correlation is ultimately measured as the time domain correlation (or equivalently, its frequency-domain transform) of an observable $x(t)$, with dimension of length:

$$\Xi(\tau) \equiv \langle x(t)x(t+\tau)\rangle_t. \tag{1}$$

The quantity x is measured as a light intensity that encodes the phase difference between beams that travel through an arrangement of mirrors in space. It characterizes the departure from a perfectly static, classical, continuous geometry. A variety of estimates reviewed below suggest that quantum geometry in a system of size $c\tau$ produces exotic correlations in position with magnitude roughly

$$\Xi(\tau)/c\tau \approx \ell_P, \tag{2}$$

where $\ell_P = \sqrt{\hbar G/c^3}$ denotes the Planck length. They represent a measure of the (inverse of the) information density in the geometry. We refer to correlations of this magnitude as "exotic" Planck correlations because they are not produced in standard classical geometry. Experiments with interferometers— in particular, the Fermilab Holometer[31]— have shown that it is possible to measure position correlations with instrumental metrology at better than the Planck sensitivity in Eq. (2).

Such experiments can in principle probe Planck scale quantum degrees of freedom [19–24]. A signal is produced by light interference from a system of mirrors in a specific spatial arrangment. The time correlation of the signal, as in Eq. (1), depends on the detailed spatial layout of the apparatus, and the detailed character of the exotic 3+1 D position correlations. An experimental program with a variety of configurations can map out the structure of Planck scale quantum correlations and their relationship with properties of matter fields.

The projection operators for a given apparatus are not calculable in standard theory, since they depend on a phenomenology for a still-unknown theory of quantum geometry. On the other hand it is often still possible to compute the forms of correlation from the symmetries of the apparatus in the emergent system, that is, the arrangment of mirrors in space, and to make quantitative tests of specific hypotheses about the geometrical correlations. These hypotheses necessarily lay beyond the framework of standard theory, but provide theoretical estimates of the density and character of information in a space-time system that can be compared with the magnitude and character of the correlations in data. In the following sections of this paper, we compute new, specific manifestations of exotic correlation associated with rotation and emergent direction. First however, we review estimates of the magnitude of exotic correlations from extrapolations of well tested physics.

Gravitational Bounds on Matter Degrees of Freedom

A classical geometry is a continuous system, with an infinite density of position information. Significant deviations from this approximation are predicted at the Planck scale. A variety of theoretical estimates suggest that exotic correlations, originating from Planck scale quantum geometry, may have a magnitude in large systems that corresponds to position displacements much larger than the Planck length. Those estimates are reviewed here: first, general bounds on the density of information, and then, more specific indications that these should manifest in observable exotic position and direction correlations.

Idealized Chandrasekhar Radius and Mass for Gravitating Systems of Relativistic Quanta

It is useful to start by reviewing Chandrasekhar's instability[32] in gravitating systems of relativistic quantum matter. Although these systems can be described without quantizing gravity itself, or even invoking the full apparatus of general relativity or concepts such as black holes, it is no accident that Chandrasekhar's scales of mass and radius appear in other, more exotic contexts summarized below: they all invoke similar criteria that relate quantum states of matter to global properties of a gravitating system. For both astrophysical systems and quantum field systems with gravity, the behavior changes qualitatively when the typical velocities of particles approach the speed of light.

Chandrasekhar derived solutions for a spherical system of matter in hydrostatic equilibrium, so that gravitational force is in balance with a gradient in degeneracy pressure. He showed that the system becomes unstable when the mean velocity of the supporting particles, which in the case of a degenerate dwarf stellar remnant are mostly electrons, approaches the speed of light. Formally in his calculation, the radius of the equilibrium solution goes to zero. It is not necessary to invoke the concept of black holes; indeed, it is adequate to use a Newtonian approximation for gravity.

Suppose the mass is dominated by baryons whose mean number density n equals that of electrons. Denote their masses by m_b and m_e respectively. Let M and R denote the mass and radius of the system, so that

$$M \approx n m_b R^3. \tag{3}$$

(Exact numerical prefactors depend on the detailed model of the system, say, a polytrope model of the density profile; they do not affect our discussion and are omitted here.) At the onset of the instability, when the velocity of degenerate electrons approaches the speed of light,

$$n \approx (m_e c/\hbar)^3, \tag{4}$$

where c denotes the speed of light and $\hbar$ denotes Planck's constant. This is also the approximate density of information— the number density of degrees of freedom of any field up to mass m_e.

The criterion of hydrostatic equilibrium is approximately that the total kinetic energy of the electrons is the same as the gravitational binding energy, and at the onset of instability this yields

$$R^3_{Chandra} n m_e c^2 \approx G M^2_{Chandra}/R_{Chandra}. \tag{5}$$

From these we derive the Chandrasekhar radius and mass at the onset of instability:

$$R_{Chandra}/\ell_P \approx m_P^2/m_e m_b, \tag{6}$$

and

$$M_{Chandra}/m_P \approx m_P^2/m_b^2, \tag{7}$$

where $m_P = \sqrt{\hbar c/G}$ denotes the Planck mass. The same critical scales emerge from other kinds of quasi-equilibrium states dominated not by degeneracy pressure, but by thermal pressure; the stability depends on when the velocity of the particles that dominate the pressure approach the speed of light.

In this sketch approximation, the (critical maximum) mass $M_{Chandra}$ only depends on m_b, which makes it clear why the masses of neutron stars nearly match those of white dwarfs. Indeed, $M_{Chandra}$ sets the scale for all stellar-mass systems. The radius $R_{Chandra}$ also depends on the lighter particle mass m_e; lighter particles yield a larger critical minimum radius when collapse occurs, so that white dwarves are much larger than black holes of the same mass when they become unstable.

For the purposes of this paper, it is useful to define an idealized Chandrasekhar radius and mass, in terms of a single particle mass m, that applies if the gravitational mass and pressure support comes from the same particles:

$$R_C/\ell_P \equiv (m/m_P)^{-2}, \tag{8}$$

and

$$M_C/m_P \equiv (m/m_P)^{-2}. \tag{9}$$

For m about the mass of the neutron, these approximately give the radius and mass of a neutron star. Since $R_C = M_C$, the system is also close to the radius R_S of a black hole, for which $R_S = 2M$ in Planck units.

While the Chandrasekhar mass has broad significance for shaping astrophysical systems, the idealized Chandrasekhar radius (Eq. 8) takes on a special significance in the relationship of field states with quantum geometry: as discussed below, $R_C(m)$ is the distance where the minimum angular spread (Eq. 13) of a Planck wave function is R_C/m. This directional criterion appears in many of the following estimates of standard quantum limits on the definition of rotation in a Planck limited system (see Fig. 1).

Gravitational Constraint on Virtual States of a Field Vacuum

Consider now a model of matter based on a relativistic quantum field, such as those of the Standard Model, combined with gravity. An important difference from the system studied by Chandrasekhar is that the quantum system includes all possible states of the field, including nonzero occupation numbers for all of its modes.

Consider states of a field below some UV cutoff scale with wavelength $\lambda = \hbar/mc$. In a volume R^3, the field has about $N \approx (R/\lambda)^3$ independent modes. In a state where each mode has mean occupation number of order unity, the number of particles per volume is about $n \approx (mc/\hbar)^3$, as in the Chandrasekhar system. Thus, in a volume with a size larger than Eq. (8), the excited field state has a mass larger than that of a black hole of the same size, which is of course an impossible physical state, inconsistent with general relativity.

This paradox suggests that even in a vacuum, exotic Planck scale quantum correlations somehow produce an "infrared cutoff" to field states of mass m at the idealized Chandrasekhar radius (Eq. 8), which of course is much larger than the Planck scale. Such an infrared constraint would not have been noticed in particle experiments[24, 33]. The entanglement scale is again shown in Fig. (1).

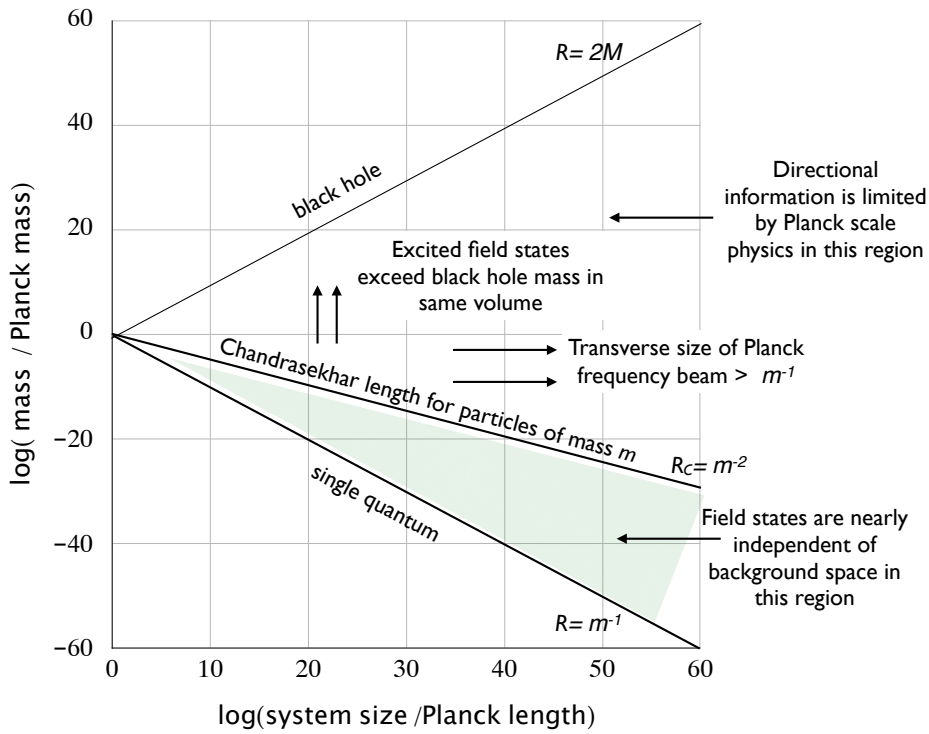

FIG. 1. Inconsistency of standard field theory and classical geometry in large systems. Matter states entangle significantly with quantum geometrical states in systems larger than the Chandrasekhar length $R_C(m)$ (Eq. 8), in the sense that the number of degrees of freedom is reduced to a fraction of its classical value much less than unity. The shaded region shows the size of a system where geometrical entanglement causes only small corrections to field theory for modes below mass m; above and to the right, quantum geometry significantly affects the number of field degrees of freedom. According to the directional entanglement hypothesis, the mechanism for the entanglement is that all fields share directional geometrical correlations with Planck transverse resolution, which have width $\sqrt{\Xi(R_C)} \approx \hbar/mc$ at separation $R_C(m)$. These can be measured with interferometry even though $\sqrt{\Xi(R_C)}$ on the lab scale is only tens of attometers, much smaller than an optical wavelength.

Black Hole Information, Emergent Spacetime, and Statistical Gravity

Black holes were discovered as classical solutions in a classical theory, general relativity. However, the theory of black holes suggests that general relativity has another formulation not as a theory of geometry, but as a statistical system, with a information content determined by the Planck scale.

The family of black hole solutions obeys thermodynamic relations, where the entropy of a black hole is one quarter of the area of its event horizon in Planck units. The classical solutions obey the analog of thermodynamic laws, and analysis of field state propagation shows that black holes radiate nearly as black bodies with a temperature determined by their surface gravity, and in a zero temperature environment, eventually evaporate into particles[34–38]. Thus, these pure-spacetime structures appear to be statistical systems composed of Planck elements, with a holographic information content.

Thought experiments suggest that a "Holographic Principle" should apply not just to black holes, but to any region of space-time, with the information content of any volume of space bounded by an area in Planck units[39, 40]. The principle can be formulated in a covariant way, defining surfaces associated with intervals on a world-lines using a causal diamond construction[41]. Jacobson[42] showed that the equations of general relativity can be derived from thermodynamic principles; the curvature of space-time has to obey Einstein's equations in order for thermodynamic relations $\delta Q = TdS$ to hold with appropriate geometry-related definitions of those thermodynamic quantities. (Verlinde has given a similar derivation of Newtonian gravity[43].) Quantum properties of black hole spacetimes suggest that information in gravitational systems is not localized as in local field theory on a classical background[4, 5].

The theoretical behavior of systems of fields and black holes thus suggests that space-time itself is an emergent

quantum system with Planck scale elements. The information, or number of degrees of freedom in a region of size R, is about $\mathcal{I} \approx R^2$ in Planck units. In a large system, this is far less than the information in standard field states up to a UV cutoff m, which as we have seen is about $\mathcal{I} \approx (Rm)^3$.

Emergent gravity can be reconciled with standard physics if states of matter are significantly entangled with those of quantum geometry in large systems. That is, there should be new forms of correlations in large systems, associated with exotic Planck scale physics of quantum geometry, that are not included in field theory. At the Chandrasekhar radius given by Eq. (8), the information in gravitational states is still larger than that in field states, but the gravitational effect of the matter implies that geometry creates significant entanglement. In the thermodynamic-gravity view[42], the entanglement is attributed to gravitational lensing of the field modes, which in turn suggests entanglement associated with a scale of directional resolution, as discussed below.

Exotic Correlations of Transverse Position and Direction

The arguments just given provide estimates of the amount of information, and the scale of entanglement of geometry and field states. However, they do not reveal the origin or nature of the entanglement. Based on these estimates alone it is possible to imagine that the entanglement may be of a very subtle nature. The following arguments more specifically suggest that new Planckian quantum behavior in large systems may appear as long-range, nonlocal geometrical correlations of the world lines of massive bodies. They take different complementary approximations to the emergent space but all approximately agree on the magnitude and character of exotic Planck correlation, related to a transverse width for the geometrical position wave function of a geometrical position operator $\hat{x}$ that depends on separation R approximately as

$$\Xi(c\tau = R) \approx \langle \hat{x}_\perp^2 \rangle_R = R\ell_P, \tag{10}$$

or equivalently, a wave function of emergent direction with a separation-dependent width,

$$\langle \Delta\theta_P^2 \rangle_R \approx \langle \hat{x}_\perp^2 \rangle_R / R^2 = \ell_P / R \tag{11}$$

A consistent toy model of a quantum algebra to describe geometrical states with these properties is reviewed in Appendix (A).

Quantum Geometrical Information

Quantum mechanics imposes a number of fundamental limits on the precision of position measurements[25]. One of these[44] enforces a minimum amount of energy associated with measurement of any time interval between events: the time it takes a quantum system to go from one state to an orthogonal state is greater than or equal to $\pi\hbar/2E$, where E is the expectation value of the energy of the system above the ground state energy. This result has been used to show[45] that in any volume there is a maximum number of distinguishable events, such that the density of clocks and signals used to measure their separation, GPS-style, not exceed the density of a black hole. In a spacetime volume of radius R and duration τ in Planck units, the bound on the number of events is about $R\tau$. Since $c\tau \approx R$ for a covariantly defined volume (such as a causal diamond), this is the same amount of information as the holographic estimates from statistical gravity just discussed. Indeed, this argument has been used as a statistical basis for general relativity[45]. Note that the area here combines spatial and temporal dimensions, R and τ.

This argument is not airtight; for example, the measurement bounds might not apply to unmeasured degrees of freedom if position information is subject to subtle squeezing. However, it does use an exact formulation of quantum information that applies specifically to event positions. It suggests that large scale exotic Planckian correlations indeed appear in measurements of relative positions of events and world lines, that could be measured by light reflecting off of macroscopic objects.

Planck Diffraction Limit on Directional Resolution

Holographic entanglement of fields in emergent geometry may be governed by a Planckian bound on directional information. An estimate of the directional spread follows directly from the relativistic wave equation, $\partial_\mu \partial^\mu \psi = 0$. For waves of frequency ω propagating in a beam— a stationary, monochromatic wave state proportional to $e^{-i\omega t}\psi(x, y, z)$, transversely localized in x and y and extended in z— the wave equation becomes

$$[\partial_x^2 + \partial_y^2 - 2i\omega\partial_z]\psi = 0, \tag{12}$$

the same equation used to model laser beams. The minimum transverse angular spread is thus the diffraction limit for a Planck frequency beam[22], setting $\omega \approx m_P c^2/\hbar$:

$$\langle \Delta\theta_P^2 \rangle \approx \ell_P/R \ . \tag{13}$$

Physically, the role played by sharp longitudinal boundary conditions (mirrors) in a laser cavity is played in emergent geometry by causal structure: the requirement that radial position and causal structure have Planck length precision at all separations. The degrees of freedom can be divided into radial information, which describes causal structure, and directional information, which describes two-dimensional angular orientation and transverse position. One factor R/ℓ_P of holographic information content describes causal, longitudinal degrees of freedom; the other factor of R/ℓ_P describes directional degrees of freedom. By contrast, in a full resolution 3D space the two directional dimensions on their own would comprise $(R/\ell_P)^2$ degrees of freedom.

Directions in space emerge from the Planck scale in such a way that directional resolution of the emergent space on any scale is given by Eq. (13). Field states cannot exceed the angular resolution of geometry, so they become strongly entangled with geometry at a separation where Planck diffraction matches the resolution of matter fields, $\approx (m/R)^2$; that separation is given by the idealized Chandrasekhar radius, Eq. (8). Note that a black hole of this size still has a much larger entropy than field states of mass $m < m_P$ in the same volume.

Planckian Wave Packet Spreading

The directional blurring scale can also be derived from standard wave equations applied to quantum states of wave packets with Planck frequency[22–24]. In this estimation, wave functions of world lines of bodies of any mass spread at the same rate as those of particles of Planck mass. The scale can be estimated starting from the standard wave function $\psi(x_i, t)$ of a massive body in classical position and time. In its classical rest frame, a massive body obeys a 3+1-dimensional version of the paraxial wave equation (Eq. 12), with propagation in time in place of radial distance, and rest mass in place of frequency:

$$[\partial_x^2 + \partial_y^2 + \partial_z^2 - 2i(m/\hbar)\partial_t]\psi = 0. \tag{14}$$

Again like a laser beam, spreading of this wave function with time is unavoidable; any solution of duration τ has a mean variance of position at least as large as

$$\langle (r(t+\tau) - r(t))^2 \rangle = \sigma_0^2(\tau) > \hbar\tau/2m. \tag{15}$$

the standard Heisenberg position uncertainty[46–49] for a body measured at times separated by τ. In this wave picture, it is derived in exact analogy to diffractive spreading of a light beam. Here, the sharp preparatory boundary condition— the equivalent of the mirror in a laser— is the preparation and measurement of the position state on spacelike surfaces at sharply defined times.

If emergent world line states correlate over duration τ by about the same amount as the world line of a Planck mass body, the exotic correlation amplitude is about

$$\Xi(\tau) \approx \langle (x(t+\tau) - x(t))^2 \rangle \approx \ell_P c\tau/2. \tag{16}$$

In the directional-entanglement model, this world-line correlation has a pure transverse character; in the radial direction, the amplitude is limited by the standard quantum uncertainty for mass m, Eq. (15), but the transverse or directional uncertainty corresponds to that of a Planck mass body, so it is much larger than standard quantum uncertainty for $m >> m_P$. Moreover, the transverse geometrical component is entangled for states of nearby world lines, so that quantum- geometrical part of the wave function is not independent from body to body; its spread leads to coherent fluctuations in direction.

Quantized Area in Loop Quantum Gravity

One formalism to describe relational states of position in an emergent space-time composed of Planck scale elements is provided by Loop Quantum Gravity. It provides a concrete motivation, and normalization, for exotic geometrical correlations in large systems. Specifically, it predicts a discrete spectrum of quantum states of area that extends to large systems, with a holographic information content.

The discrete spectrum of area states is[1–3, 50, 51]:

$$A_j = 8\pi\gamma\hbar G c^{-3} \sum_i \sqrt{j_i(j_i+1)}, \tag{17}$$

where j_i are half-integers $i/2$ for integers i. We will adopt a value for the Immirizi parameter γ, computed to match black hole entropy for $\gamma = \ln 2/\pi\sqrt{3}$ (see ref. [1], eq. 6.78), recognizing that this is a result from just one particular fundamental relational theory. Since an important goal of an experimental program is to distinguish between them, the absolute normalization should be regarded as a significant observable.

For large areas ($i >> 1$) we can write the eigenvalues (of so-called "main sequence" states) as

$$A_n \approx A_Q n^2 \tag{18}$$

for integers n, where

$$A_Q \equiv 2\pi\gamma\hbar G c^{-3} \equiv \ell_Q^2 \tag{19}$$

is a fundamental Planck area unit. As discussed below, the natural fundamental length to adopt according to this formulation is not the standard Planck length ℓ_P, but $\ell_Q = \ell_P\sqrt{2\ln 2/\sqrt{3}} = 0.895\ell_P$. The difference between adjacent area states is

$$A_{n+1} - A_n \approx 2A_Q n. \tag{20}$$

Notice that the spacing grows with n. Thus for larger areas, each area eigenstate is bigger than the last by much more than a single Planck area pixel. For a system of area $A = R^2$, the difference between adjacent states is

$$\Delta A = 2\sqrt{A_Q A} = 2R\ell_Q. \tag{21}$$

It is natural to identify this quantity with the exotic position correlation amplitude on each scale, $\Xi(\tau = R/c) \approx \Delta A(R)$. The areal quantization reflects the same blurring or loss of relative positional information on large scales that appears in wave equation solutions, holographic information constraints, and other "infrared" departures from field theory reviewed above. It explicitly captures an essential nonlocal feature of geometrical states: that the positional relationships of the geometry itself depend on separation, and degrade over large areas.

III. ROTATIONAL FLUCTUATIONS

Fluctuations of Emergent Direction: Newton's Bucket at the Planck Scale

The concept of absolute space was invented by Isaac Newton. In a "Scholium to the Definitions" in the *Principia* [52–54], Newton describes a thought experiment with a rotating vessel of water. The curved surface of the water demonstrates the physical reality of absolute space: "This ascent of the water shows [indicat] its endeavor to recede from the axis of its motion; and the true and absolute circular motion of the water, which is here directly contrary to the relative, becomes known [innotescit], and may be measured [mensuratur] by this endeavor." Newton thereby differentiates rotation from other types of relative motion: "And therefore this endeavor does not depend upon any translation of the water in respect of the ambient bodies, nor can true circular motion be defined [defineri] by such translation. There is only one real circular motion of any one revolving body, corresponding to only one power of endeavoring to recede from its axis of motion, as its proper and adequate effect; but relative motions, in one and the same body, are innumerable, according to the various relations it bears to external bodies, and like other relations, are altogether destitute of any real effect, any otherwise than they may perhaps partake of that one only true motion."

Newton realized that are two different ways of telling whether a direction to a body is changing. One way is local: a change of direction causes centrifugal acceleration in the (rotating) frame in which the direction is not changing, as in Newton's rotating vessel of water. The other way is to compare with very distant bodies. The agreement between these two is fundamental and profound. Ernst Mach pointed out that physics needs to explain it, which inspired Einstein in the development of relativity theory.

Today the coincidence seems less profound, or at least less puzzling, because general relativity indeed provides a complete, rigorous and well tested account of the classical physics of space, including a precise notion of absolute space. We now know that distant matter (Newton's "ambient bodies") actually does directly affect local space: its gravitional field influences the local nonrotating frame, via gravitomagnetic frame dragging. In cosmological solutions,

distant matter even nonlocally defines a preferred cosmic rest frame of motion at any given event, although that cannot be measured locally. Thus in classical physics, no additional theory is needed.

However, the coincidence of local and global frames requires a fuller explanation in the context of quantum gravity. In a fully quantum space-time, as in relational theories[1–3], all positions and motions, indeed all observables, have to be defined within the quantum system. There is no absolute reference standard to define the frame; there are only elements of the quantum system, starting with the Planck scale.

Relativity preserves Newton's fundamental distinction between translations and rotations. Lorentz invariance dispenses with absolute motion through space as a local observable, but retains an absolute local definition of rotation: at every event on a world line, there is an absolute, nonrotating inertial frame. The rate of change of any direction is defined relative to a property of local space. Of course this relationship is still classical, even for quantum systems: there is no relational quantum theory to explain how the orbital states of atoms "know about" matter in distant galaxies, to determine what states have zero angular momentum. In standard quantum theory, that relationship is established via absolute, classical space.

Imagine shrinking Newton's rotating vessel to a Planck size. In modern standard theory, the Planck size vessel works much the same as Newton's. The classical local inertial frame, which defines rotation, provides a complete (albeit classical) account of its relation to distant matter. This nonrotating frame is precisely defined by the classical geometry, and hence also in quantum field theory, even at the Planck scale.

By contrast, in a small volume, a relational or emergent theory provides no absolute frame for a Planck size vessel to refer to; its local rotation rate is defined only with respect to nearby elements, all of which have Planck scale indeterminacy in their wave functions. The inertial nonrotating frame on the Planck scale is indeterminate, leading to fluctuations in the rate of change of direction of the order of the Planck frequency. For larger systems and over longer times, the uncertainty and fluctuations average out, but the averaging is not perfect. Even large systems must display small residual correlated fluctuations in direction; the theory must display small, exotic Planckian quantum correlations. The model here is really a hypothesis about how the averaging works— how the quantum system approaches the well known classical limit of approximately absolute space. The behavior is uniquely constrained by the symmetries of space, and by the requirement of saturating the holographic bound on information in causal diamonds.

Quantum Geometry with Exotic Rotational Correlations

Matter and geometry refer to different properties of one quantum system. To a very good approximation in experiments to date, they refer to nearly-separable subsystems. The goal here is to find a way to detect the exotic correlations associated with their entanglement.

Matter refers to field-like properties of the system, that is, spatially localized field amplitudes and derivatives, and geometry refers to position-like properties, that is, directions, radial, and temporal separations. As shown above, theory suggests that the quantum system underlying space contains a limited, holographic amount of information, and that this bound affects the behavior of field states in large systems. The hypothesis of this paper is that the holographic bound particularly affects directions in space, so that radial separations, and the causal structure defined by null causal diamonds associated with intervals on any world line, retain very nearly their classical structure.

This idea fixes the form of the exotic entanglement of matter and geometry in large systems. Even with no dynamics or Lagrangian for the system, this hypothesis is sufficiently precise to calculate certain properties of the correlations and fluctuations. It leads to a specific scenario about how emergence works, and about the spatial character of the exotic correlations on large scales.

With this hypothesis, radial directions around any world line have a special significance. The null radial trajectories define causality in all directions, and define a particular set of eigenstates. This projection of the quantum system is determined by a choice of world line or timelike observer. In the emergent space, spatial structure is defined by intersecting light cones from the ends of any interval on the world line, called causal diamonds. The invariant emergent geometrical objects are world lines, intervals of proper time, and causal diamonds.

Rotational fluctuations arise naturally in a system ultimately composed of discrete elements at the Planck scale. In the emergent system, there is no fixed background space to define an inertial frame. From one moment to the next, the situation depends only on previous relationships. The causal dependences of rotation around a world line are mapped out by the light cones emanating from each event. The total geometrical state of a system includes entanglement of all of the nested causal diamonds, and the total variance in position is the sum of variances from the nested diamonds (see Figs. 2, 3).

Briefly, because of the limited directional information, positions in the transverse directions have limited fidelity. Precision of angles or directions measured over intervals of finite duration are limited to the Planck diffraction limit. On hypersurfaces defined by one observer's final emergent (classical) world line, correlations occur at spatial separation

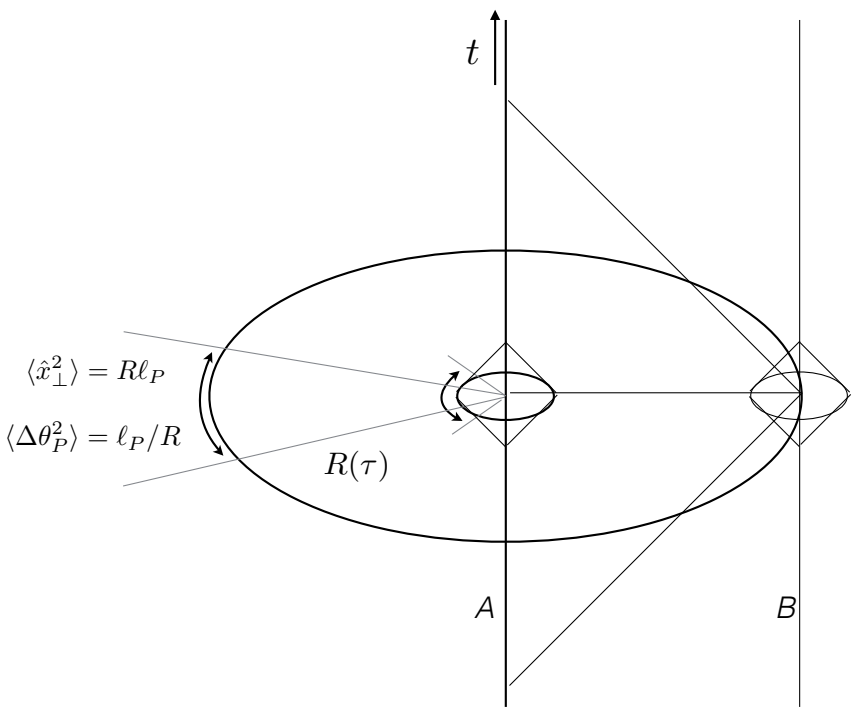

FIG. 2. Rotational fluctuations in a large volume of space emerging from Planck scale elements. Transverse position and directional width of the geometrical wave function are shown on a 3-surface in the rest frame of a particular world line, at a particular proper time $t = 0$. The light cone of a Planck scale 4-volume (center) shows a large uncertainty in any direction and its time derivative because there is no fixed reference frame on that scale. As space emerges over larger intervals of proper time, information about the nonrotating frame is correlated with distant parts of the system by hierarchical entanglement (see also Fig. 3). Along a particular world line, the directions collapse in nested light cones; just as at the Planck scale, there is no reference or memory at times separated by interval $2\tau/c$ beyond a separation $R = c\tau$. Directions within that surface fluctuate coherently, relative to more distant world lines, with variance $\langle \theta_P^2 \rangle = \ell_P/R$ on a time scale $\tau = R/c$. As discussed in the following section, the correlation $\Xi(\tau)$ in an interferometer signal is determined by the mapping $R(\tau) = |x_i(\tau)|$ defined by the light circuit, as well as the geometrical projection of the transverse directional variance. On a laboratory scale the direction fluctuates by about $\langle \theta_P^2 \rangle^{1/2} \approx 10^{-18}$, in a fraction of a microsecond, corresponding to a net rotation rate of enclosed matter of about one radian per ten thousand years.

R, on timescale R/c, with amplitude $\Xi \approx \langle x_\perp^2 \rangle \approx R\ell_P$. The amplitude corresponds to a Planck scale diffraction bound on directional resolution in space, or to a discrete Planck random walk in transverse position. Field theory becomes significantly entangled for modes of momentum m— that is, the number of degrees of freedom is significantly changed— a separations larger than about $R_C \approx m^{-2}$ in Planck units. The directional correlations can be visualized as rotational fluctuations, where each component of direction to a world line at position x fluctuates about its classical value at an angular rotation rate $\omega_i = \dot{\theta}_i \equiv \epsilon_{ijk}\dot{x}_j/x_k$, with $\langle \omega^2 \rangle^{1/2} \approx (R/\ell_P)^{-3/2}$ — a form of holographic noise.

Exotic rotational fluctuations can be thought of as a quantum differential rotation of space: everything closer than R rotates relative to everything more distant than R, by a very small amount. It is helpful to visualize them as a sum of coherent discrete transverse spatial displacements, or twists, associated with discrete displacements in time. Consider a null trajectory from a distant source to an observer. For each Planck step, it experiences a random transverse displacement from the classical trajectory, in which it shares common with other radial trajectories at the same R. The exotic correlation arises from the sum of coherent transverse displacement at the 2D boundaries of the nested causal diamonds. The transverse displacements are random quantum variables, because projections onto different spatial directions do not commute. The fluctuation spectrum thus resembles a discrete, purely transverse random walk. The total transverse displacment is the sum of random transverse Planck steps, as causal diamonds are built up of null radial steps. The nested world lines of the space contained in a causal diamond are advected transversely, with coherent fluctuations in position, shared consistently by all nearby world lines. At the end of the

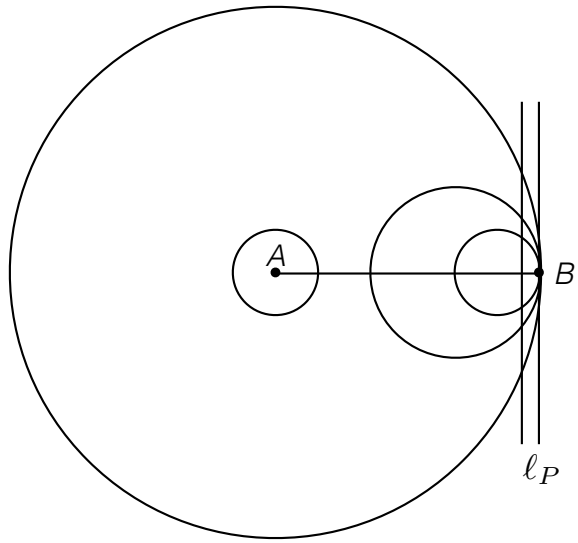

FIG. 3. Spacelike 2D surfaces bounding nested causal diamonds around world lines A and B, as shown in Fig. (2). One spatial dimension is suppressed. The rotational state of the entire system must collapse self consistently, requiring entanglement of states around all enclosed world lines. The incremental transverse Planck displacement at B, associated with the next Planck increment of separation from A, agrees with the transverse displacement in the smaller nested tangent causal diamonds at the same event. For null propagation in any direction by one Planck length, a random transverse displacement occurs by about one Planck length.

day, there is no new effect locally observable on a single world line, and no new effect on any observable that entails purely radial signal propagation.

This exotic correlation is a quantum effect, not describable by a metric, or with fixed background space. Possibly, it could be described as a superposition of states, an example of sum of histories with particular set of states [55]. The particular branch of the whole wavefunction depends on the world line (but not on any other property of) an observer. Again, there is no disagreement between observers about any actual observable. The transverse position of whole space does not become "real" until a measurement is made, and any measurement is unique to a particular world line.

In the quantum states of an interferometer, fields are entangled with geometry, and the states of both finally collapse at the beamsplitter, where the radiation emerging coherently combines states from macroscopically different paths through the space. The projection of geometrical quantum states is determined by the true causal structure of the space, the therefore by the transverse to the observer's radial direction, not to a measured propagating field. The relationship between the two $(dt/d\tau)$ is explored in the next section in the context of an interferometer signal.

Behavior of Exotic Rotational Fluctuations in Large Systems

In the frequency domain, exotic correlations appear as noise, which we can heuristically picture as rotational fluctuations of space itself. That is, the apparent direction to any body, compared to any much more distant body, fluctuates randomly in time. The effect can also be regarded as fluctuations in the inertial nonrotating frame relative to which directional changes are defined. The fluctuation in direction is very small, with zero mean relative to its classical value. It behaves like a fluctuation in the rotation of space itself, in the sense that it is coherently shared by different bodies close to each other in space and time.

Like zero point fluctuations of a field excitation in a vacuum, this quantum "motion" represents a quantum system with a nonzero width of a wave function that has a zero mean. In this picture, the zero point refers to a stationary direction in the classical nonrotating frame. A quantum relationship with matter out to the cosmic event horizon prepares the global state and defines zero rotation. A zero net rotation state is defined by the classical geometry, but there is a nonzero quantum variance that depends on distance from an observer. The wave function width is identified with the exotic correlations and fluctuations.

Directional degrees of freedom are subject to the usual holographic bounds on information, so the above estimates of directional variance lead to an estimate of the exotic directional correlations and their associated fluctuations, as shown in Figure (2). Heuristically, the amplitude of the exotic rotational "motion" can be thought of simply as a Planckian random walk in transverse position: at every Planck step away from the observer, there is a random transverse positional displacement of one Planck length. The variation at separation R in the proper time t of an observer is

$$\langle (d\Delta x_\perp/dt)^2_R\rangle = (d\langle \Delta x_\perp^2\rangle/dR)(dR/d\tau) = c\ell_P. \tag{22}$$

The displacement is a pure rotation, coherent in all directions from the observer at a constant radial separation defined by its causal structure— that is, on the unique spacelike 2-surfaces defined by causal diamonds. For calculational simplicity, in this paper we focus on results in nearly-flat space relevant for experiments, but the formulation should generalize covariantly to curved spaces.

A precise, mathematically controlled holographic toy model of 3D quantum positional states is summarized in Appendix (A), based on a well known quantum mechanical system, a spin algebra. As in the standard spin system, there are actually two independent space dimensions, the radial position and the projection onto any axis. This model is sufficient for the calculations here and agrees with the scaling of information indicated in the previous section, including that provided by Loop Quantum Gravity. The model has one scale— the Planck length— which can be normalized to agree with black hole entropy.

The model is not presented as a fundamental theory, and indeed, does not even have any dynamics; since it is in 3D instead of 4D, time evolution is still treated heuristically, both here and in the calculation of interferometer response below. However, it provides a consistent holographic model of quantum position states in 3D, and we can use classical space-time for the time projection, as in Eq. (22).

In this narrative of emergent geometry, directional orientation on scale R has an angular wave function with a width fixed by the Planck diffraction angle (Eq. 13), $\langle \Delta\theta_P^2\rangle_R \approx (R/\ell_P)^{-1}$. The nearly-classical inertial frame emerges, along with space itself, only as a long time average. A long duration on the world line entails a causal relation with a large region of distant emergent space, and the matter within it. On the time scale R/c, any direction is "refreshed" from a distribution of variance $\approx \langle \Delta\theta_P^2\rangle_R$— there is no internal reference, so this is the maximum precision available within a causal diamond of duration $\tau \approx R/c$. As a large scale nearly-classical space emerges from Planck scale quantum elements, the wave function of the system "collapses" hierarchically, in nested causal diamonds[6, 7]. The emergent unfolding and collapse of the quantum system leads to macroscopically coherent fluctuations in direction, corresponding to a time series of pure rotations. Directions to matter world lines within radius R fluctuate together, with a small angular variance $\langle \Delta\theta_P^2\rangle_R$ that varies randomly, on timescale R/c, about the classical nonrotating inertial frame, defined by the long time average as $\tau \to \infty$ and $R \to \infty$.

This picture of fluctuations is based on the emergent model of space. New information flows into the system along light cones from far away parts of the system that define the nearly-classical inertial frame. Information arriving at an observer collapses the wave function in a set of nested causal diamonds[6, 7]. The rest frame proper time t defines a foliation of spacelike 3-surfaces. On each surface (that is, at each time t) a 2-sphere at distance R corresponds to the boundary of a causal diamond over an interval $t\pm\tau$, where $\tau = R/c$. Within the diamonds, the inertial frame collapses into a consistent definite state. Directions at distance R vary on on timescale $\approx R/c$, by about $\Delta\theta \approx (\ell_P/R)^{1/2}$. At large distances, fluctuations become slower and smaller in angle, approaching the classical limit. The directional fluctuations increase at smaller distances on short timescales, but the long time average on all scales converges to the classical nonrotating frame. The directional fluctuations are far too small to observe directly, for fundamental reasons: they would be at the limit of observability even with Planck frequency radiation. The main observable effect of rotational fluctuations is the exotic correlation they create in interferometer signals, via the apparatus-dependent mapping discussed below.

We can describe the effect as statistical fluctuations in rotation rate around any axis. An ordinary rotation corresponds to motion of a body at x_j according to the classical relation,

$$dx_i/dt = \epsilon_{ijk} x_j \omega_k, \tag{23}$$

where ω_k is the rotation rate for component k. The typical (root mean square) fluctuation in any component of rotation rate averaged over a time R/c is about

$$\omega_R \approx c\Delta\theta/R = c\ell_P^{1/2} R^{-3/2}. \tag{24}$$

The coherence time for fluctuations on scale R is about R/c. Note that the effect entangles states over an enormous range of scales: the tiny displacement $\approx R^{1/2}$ in Planck units, a coherence time $\approx R$, and an inverse angular rotation rate $\approx R^{3/2}$. The fluctuation coherence time in a laboratory setting— about a light crossing time— is less than a microsecond, even though the rotation rate is only about one radian in ten thousand years.

Exotic rotational correlations create the directional entanglement between geometry and field degrees of freedom indicated by the arguments of the previous section. The geometrical state is the same for all field modes; for modes of a each scale, entanglement becomes gravitationally significant beyond the corresponding idealized Chandrasekhar radius when particles of a given mass become relativistic. But even at smaller radii, states of all matter fields should inherit small phase shifts from states of geometry.

For distances larger than the Planck length, the effect of the fluctuations in single-particle interactions is always small, and it is very small at observed particle energies, which are less than about $10^{-16} m_P c^2$. Interferometry by contrast uses very large numbers of particles to make a coherent, collective nonlocal position measurement of wave positions, with precision much smaller than a wavelength. The in-common transverse displacement on all fields the laboratory scale is on the scale of attometers, an amplitude which may be detectable in precision interferometry. Rotational fluctuations in transverse variance of position in space at separation R (Eq. A13) leads to exotic signal correlations in interferometers that enclose a nonzero area, as shown in the following section.

For long time averages at a given radius, $\tau > R/c\tau$, the time-averaged rotation rate about the asymptotic classical inertial frame is smaller by a factor $\approx \sqrt{R/c\tau}$, as the state of the system is prepared with fresh data from far away:

$$\langle \omega_R \rangle_\tau = c\ell_P^{1/2} R^{-1} (c\tau)^{-1/2}. \tag{25}$$

Thus, interferometric experiments need to have superluminal sampling, to resolve the phase motions on timescales shorter than the causal crossing time of the apparatus.

IV. EXOTIC ROTATIONAL SIGNAL CORRELATIONS IN INTERFEROMETERS

Projection of Exotic Position Correlations onto Signal Correlations

An interferometer maps the world lines of a set of mirrors in space and time onto a single time series, $x(t)$. The effect of quantum geometry on its correlation function $\Xi(\tau)$ depends on the path taken by the light through space-time before the signal is produced, and in particular, on its interaction with world lines of massive mirrors that change its direction. Thus, the correlation is determined by the arrangement of the mirrors in the apparatus. The measured quantity in an interferometer is the time correlation function of the dark port signal,

$$\Xi(\tau) \equiv \langle x(t) x(t+\tau) \rangle_t \tag{26}$$

where $x(t)$ represents the phase difference between beams arriving and interfering at the beamsplitter, measured in length units. This observable is chosen because it is by far the best position measurement in the system. The estimates discussed above predict a typical magnitude of the correlation function of order

$$\Xi(\tau)/\tau c^2 \approx t_P \equiv \sqrt{\hbar G/c^5} = 5 \times 10^{-44}\text{sec}, \tag{27}$$

where correlated signals from interferometers can now measure or constrain Planck scale effects.

The observable displacement between the two beams arriving at the beamsplitter, $x(t)$, connects to the properties of quantum geometry via a projection operator $P^{\mu\nu\kappa}(\tau)$ that characterizes an experiment:

$$\Xi(\tau) \equiv \langle x(t) x(t+\tau) \rangle = P^{\mu\nu\kappa}(\tau) \Xi_{\mu\nu}(x_\kappa) \tag{28}$$

Here, indices run from 0 to 3, x_κ represents the classical 4D separation vector between points, and $\Xi_{\mu\nu}(x_\kappa)$ denotes a quantum geometrical correlator in 3+1 D:

$$\Xi_{\mu\nu}(x_\kappa) = \int dx_\lambda \Delta x_\nu(x_\lambda) \Delta x_\mu(x_\lambda + x_\kappa). \tag{29}$$

The projection $P^{\mu\nu\kappa}(\tau)$, defined for a specific interferometric experiment, determines the mapping of exotic geometrical correlations onto the 1D signal.

In principle, a quantum theory of geometry should allow calculations of both $\Xi_{\mu\nu}(x_\kappa)$ and $P^{\mu\nu\kappa}(\tau)$. In practice, there is not yet a theory of quantum geometry that allows a fully general phenomenology to be calculated for arbitrary

configurations. Instead possible correlations are constrained by the symmetries of the apparatus and properties of the emergent space time, such as causal structure. Previous papers[19, 23] show worked examples for the specific setup of Michelson interferometers, allowing a constraint on strain and shear modes. Here, we study how a Sagnac interferometer can probe the emergence of pure rotational modes associated with emergence of directions from the Planck scale.

Exotic Signal Correlation in a Sagnac interferometer

It is possible to sharpen these general considerations into an exact spectrum for signal correlations in a given apparatus. A specific predicted form of the spectrum, with no parameters, can be derived from the antisymmetry associated with pure rotations, together with a normalization from holographic gravity.

We describe the apparatus in the rest frame and local inertial frame of the beamsplitter in a Sagnac interferometer, the world line in an apparatus where the wave function of geometry is entangled with that of measured radiation, prior to its "collapse" in the square-law detector. In this frame, based on general considerations of holographic scaling and statistical isotropy, we conjecture the following form for the 3D projection of the exotic correlation (Eq. 29), at a single time in this frame:

$$\Xi_{ij}(x_k, \tau = 0) = \epsilon_{ijk} x_k \ell_P, \tag{30}$$

where x_k denotes the separation from a classical reference world-line, and ϵ_{ijk} represents the antisymmetric 3-tensor. This form of exotic correlation includes quantum properties of emergent directions. It corresponds to a pure rotation, and also to a consistent noncommutative quantum algebra of position operators with a holographic density of degrees of freedom (see Appendix A)— a "toy model" of quantum geometry. The correlation components are orthogonal to each other, and to their separation x_k from an observer, or specifically in this case, from the beamsplitter.

We do not have a complete theory of the apparatus projection P_{ijk} for the emergent 3+1 D system, but we can guess at relations between the 3D correlations and the 1D correlation in a Sagnac signal, based on the antisymmetric character of rotational motion. The approach is to define geometric quantities in the rest frame of the apparatus that can be combined into a quantity that scales like $\epsilon_{ijk} x_k \ell_P$, in the same way as the exotic correlation on each hypersurface.

In a Sagnac interferometer, the path of light is a closed circuit. The light follows the same path in two directions and the signal records their phase difference at the beamsplitter. Let τ^+ and τ^- denote affine parameters along the path in the two directions. Denote the classical path of the interferometer in space, in the rest frame of the beamsplitter, by $x_i^+(\tau)$ and $x_i^-(\tau)$, in the two directions around the circuit. Here $i = 1, 2, 3$ again denotes the 3D spatial indices, although below we will assume a planar apparatus for simplicity. The functions $x_i^+(\tau)$ and $x_i^-(\tau)$ can be visualized as the trajectories of "tracer photons" in each direction around the circuit; they map positions on the circuit in 3-space to points on an interval on the real line, $(-P_0, +P_0)$, where P_0 denotes the perimeter of the circuit, the origin maps to the beamsplitter, and τ represents a time interval in the proper time of the beamsplitter. The effects of quantum geometry on the measured correlation $\Xi(\tau)$ depends only on the classical path, defined by $x_i^+(\tau)$ and $x_i^-(\tau)$, the positions of a pair of tracer photons that begin and end their circuit at the same time. The tangent vector to the path in each direction is $\partial x_j^\pm / \partial \tau$.

It will be convenient to express a general form for the functional dependence of $\Xi(\tau)$ on the classical path in terms of the "swept-out area", $A(\tau)$, similar to the concept used in Kepler's second law of planetary motion. Define $A_i(\tau)$ as an oriented area in the inertial rest frame, swept out by lines between the beamsplitter and the tracers in the two directions (see Fig. 4). The areas from the beamsplitter to the two tracers change as:

$$dA_i^+/d\tau = \epsilon_{ijk}[x_k^+(\tau) dx_j^+/d\tau] \tag{31}$$

$$dA_i^-/d\tau = \epsilon_{ijk}[x_k^-(\tau) dx_j^-/d\tau]. \tag{32}$$

These quantities are completely determined by the geometrical configuration of the apparatus.

In general a transverse swept area can also be defined from from the swept area between the two tracers, adding additional cross terms:

$$dA_i^\times/d\tau = \epsilon_{ijk} \frac{1}{2}[dx_j^+/d\tau + dx_j^-/d\tau][x_k^+(\tau) - x_k^-(\tau)]. \tag{33}$$

This component corresponds to shear, rather than rotation about the beamsplitter. We therefore assume here that the emergent rotational component just depends on a combination of the two terms directly related to rotation about

the observer/beamsplitter world line, Eqs. (31) and (32). This assumption is also testable: if present, the shear terms would be detectable in a Michelson interferometer[19, 23], which is not sensitive to the rotational terms measured in a Sagnac device. Experiments in both configurations would distinguish the modes, and explore the full character of transverse exotic position fluctuations.

The exotic correlation amplitude in the signal is given by the projection of the exotic transverse position correlation represented by the apparatus. The swept area provides this: relations between $dA_i^{\pm}(\tau)/d\tau$, $x_k^{\pm}(\tau)$ and $dx_j^{\pm}/d\tau$ combine into a function of τ that depends on the exotic correlation $\epsilon_{ijk}x_k\ell_P$ on each hypersurface, but where the spatial indices have all contracted.

The projection can be visualized geometrically (Fig. 4). The essential assumptions are just the holographic scaling of transverse position correlations, and the standard projective properties of emergent space-time that relate R, t and τ. Assume for simplicity a planar apparatus, and thereby suppress directional indices for A_i. The swept area rates $dA^{\pm}/d\tau$ are proportional to separation from the origin at any point on the path, and to the projection of the path on the transverse direction at that point. Denote the angle between the light path tangent and position vectors by $\theta'(\tau)$. This angle determines the affine mapping between t and τ via $dt/d\tau = \sin\theta'$, and the swept area via

$$dA^{\pm}/d\tau = \sin\theta' dA^{\pm}/dt = R(\tau)\sin\theta', \tag{34}$$

where $R(\tau) = |x_i(\tau)|$. The contribution to the exotic signal correlation at each τ, apart from a constant offset fixed by the boundary condition determined by closure of the circuit, is also fixed by a projection onto the path, in this case of transverse position variance (Eqs. 30, A13) :

$$(\Xi(\tau) + \text{constant}) = \langle \Delta x_{\perp}^2 \rangle_{R(\tau)}^{1/2} \sin\theta' = \ell_P R(\tau)\sin\theta'. \tag{35}$$

Since this also scales linearly with $R(\tau)$, the swept area rate is simply related to the signal correlation by

$$(\Xi(\tau) + \text{constant}) = \ell_P dA/cd\tau. \tag{36}$$

Define the total swept area $A(\tau)$ as a sum of the rotational components in the two directions, so that

$$|dA/d\tau| = |dA^+/d\tau + dA^-/d\tau|, \tag{37}$$

and the total enclosed area is

$$A_0 = \frac{1}{2}\int_{\tau=0}^{P_0} d\tau dA/d\tau \tag{38}$$

when integrated over the total perimeter P_0.

Adding the contributions from the two directions in Eq. (36) then leads to the following formula for exotic correlation in a planar Sagnac interferometer of any shape:

$$\Xi(\tau)/\ell_P = \Xi_0/\ell_P - |dA(\tau)/cd\tau|, \tag{39}$$

where the correlation at zero lag,

$$\Xi_0 \equiv \Xi(\tau = 0) = 2A_0\ell_P/P_0, \tag{40}$$

gives the total mean square phase variation from the exotic correlation in length units. This constant is determined by the requirement that the correlation integrates to zero for $|c\tau| > P_0$, so that the average rotation vanishes in the classical limit of zero frequency. A specific example of the predicted correlation function for a square configuration is shown in Fig. (5).

It is interesting to compare the exotic correlations with the classical Sagnac effect. For an apparatus of any shape, the phase shift in length units between light going in two directions around a circuit rotating with angular velocity ω_0, relative to the local nonrotating inertial frame, is

$$c\Delta t = 4A_0\omega_0/c. \tag{41}$$

The exotic effect produces the tiny fluctuations around this value, due to the imperfect definition of the frame. The exotic correlation amplitude for a Sagnac device on any scale (Eq. 40), which is a mean square displacement, is proportional to the classical displacement for an apparatus rotating at angular velocity $\omega_0 = c/2P_0$, times the Planck length; once again, the exotic phase displacement resembles a Planckian random walk.

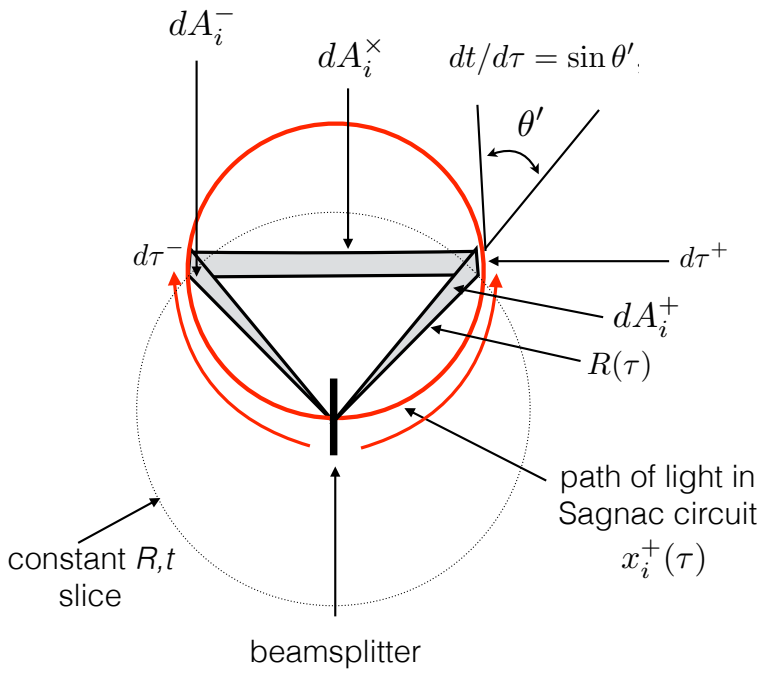

FIG. 4. Definitions of geometrical quantities used to project exotic 4D correlations onto the affine time parameter τ of the light path in a planar Sagnac circuit in the rest frame of the beamsplitter (Eqs. 31, 32, 33, 37). In this illustration, the circuit is shown as a solid circle, but the formula for the exact signal correlation function (Eq. 39) applies for an apparatus of arbitrary shape. The cross term $A^\times$ is not included in the formula for Sagnac correlation from pure rotational/directional modes.

The general formula (Eq. 39) respects the symmetries expected for an emergent geometry, and for a Sagnac apparatus. It appears to have the correct spatial scaling and transformation properties to describe the 1D time domain correlation for a planar interferometer of any shape. It also makes physical sense; for example, in sections of the circuit where light is not interacting with matter, the path is straight, so that $|dA_\odot(\tau)/cd\tau|$ is constant for corresponding intervals of τ. Thus as expected, the correlation is constant over those intervals; the phase of radiation is not affected by trajectories of emergent world lines it does not interact with. At reflections, the light path changes directions and the correlation changes value discontinuously, as expected if the matter fields associated with the positions of the mirrors are directionally entangled with emergent geometry.

The area quantization from Loop Quantum Gravity described above (Eq. 19) has an exact normalization derived from the entropy of black hole states that can be used to set an absolute normalization for the correlation function. For definiteness, consider a square arrangment with sides L. For a square, Eq. (18) gives $n \approx \sqrt{A_n/A_Q} \approx LA_Q^{-1/2}$, hence a natural unit of length $\ell_Q = A_Q^{1/2}$. This fixes an absolute normalization for the signal correlation function,

$$\ell_Q = A_Q^{1/2} = \sqrt{2\ln 2\hbar G c^{-3}/\sqrt{3}} = 0.895\ell_P \tag{42}$$

It could be that the appropriate fundamental unit to use in Eq. (39) is not ℓ_P, but the loop- normalized Planck length ℓ_Q (Eq. 42). They are almost the same, but in any case experiments should be designed to reach this value, and eventually to have calibration good enough to measure the difference. An experiment measures the absolute value of a fundamental length or time, and its exact value has information about its relation to G.

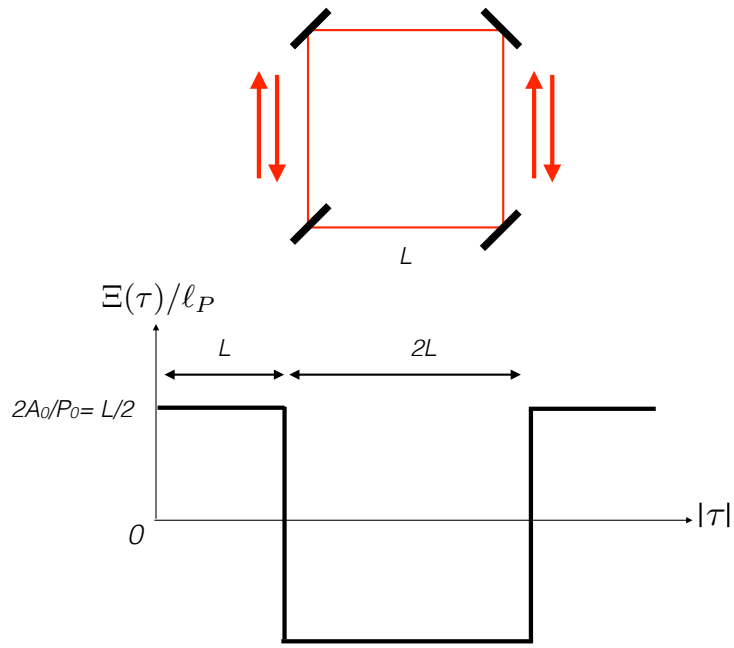

FIG. 5. Spatial layout and exotic signal correlation function for a square Sagnac interferometer. The general formula (Eq. 39) gives the signal correlation for a planar interferometer of any shape.

V. ROTATIONAL FLUCTUATIONS AND COSMIC ACCELERATION

The properties of the Planck scale rotational correlations are scale-free power laws, apart from the Planck scale itself. Of course systems in the real world are not scale free; systems including stars and their remnant black holes have scales determined by the physics of matter fields. While we have discussed the effect of geometrical entanglement on field degrees of freedom, including the small phase displacements in interferometers, we have not yet estimated the effect of the matter vacuum on emergent quasi-classical geometry. It could be that scales of the matter vacuum break the scale-free symmetry of pure classical relativity, via directional entanglement. In particular, we suggest here that it might set the scale of the scalar cosmological constant in the classical field equations.

The Cosmological Constant and Cosmic Acceleration

The Einstein field equations of general relativity can be contracted with the metric tensor $g_{\mu\nu}$ to yield a scalar relation,

$$\Lambda = \frac{2\pi G}{c^4}(T + 2\mathcal{R}), \tag{43}$$

where Λ denotes the cosmological constant, $\mathcal{R} \equiv R(c^4/16\pi G)$ denotes the Ricci curvature scalar $R \equiv g^{\mu\nu}R_{\mu\nu}$ in units of $16\pi G/c^4$, $R_{\mu\nu}$ denotes the Ricci curvature tensor, and T denotes the trace of the classical energy momentum tensor of matter, $T_{\mu\nu}$. Within general relativity, there is no mathematical difference between Λ and a component of the matter vacuum with $T_{\mu\nu}$ proportional to $g_{\mu\nu}$. In standard theory, Λ is a new constant of nature, unconnected to other properties of gravity or matter[56]. Its value is also mysterious and arbitrary in holographic theories of gravity[42].

Cosmic data suggest that the expansion of the universe is accelerating[57–60]. This phenomenon can be interpreted in classical General Relativity as an effect of the cosmological constant Λ. In addition to the standard attractive gravity of normal forms of matter expressed in T, the cosmological term produces an additional repulsive acceleration

between two bodies at separation r,

$$\ddot{r} = H_\Lambda^2 r, \tag{44}$$

proportional to their separation r in Newtonian coordinates, where $H_\Lambda^2 \equiv \Lambda/3$. In cosmological models where matter has $T > 0$, H_Λ is the asymptotic value of the Hubble expansion rate in the far future, after other forms of matter have thinned out due to the expansion. In other models, cosmic acceleration is caused by exotic new forms of "dark energy" with $T < 0$, whose gravity creates acceleration even with $\Lambda = 0$. Those models also introduce new fundamental scales of mass, generally unconnected with known physics [59–61].

Cosmological Constant from Entanglement of Planckian Fluctuations with the Strong Vacuum

Cosmic Centrifugal Acceleration

This description of global dynamics is at the classical level. If matter and geometry are subsystems of a single quantum system, the standard distinction between matter (T) and geometry ($\mathcal{R}$) becomes ambiguous on scales where they are significantly entangled. As shown above, that happens in an energy dependent way for matter fields, at the Chandrasekhar radius for a given particle energy. It is natural in this context to suggest that the scale of Λ is set by a scale where the matter vacuum becomes entangled with geometry.

Here, we interpret cosmic acceleration as an emergent property of space, associated with rotational fluctuations in the inertial frame and their entanglement with known matter fields. In this interpretation, the scale of cosmic acceleration is determined by known length scales already built into physics, the Planck scale and the strong interaction scale. On cosmological scales, the behavior of cosmic acceleration is the same as a classical constant Λ. The direct evidence for this mechanism would come from interferometric measurement of Planck rotational fluctuations on laboratory scales.

The starting point is simple: in a classical system rotating at a rate ω, a body at separation R from the axis of rotation experiences a centrifugal acceleration,

$$\ddot{r} = \omega^2 r. \tag{45}$$

Like cosmic acceleration, it is independent of mass, always directed outwards, and is proportional to r. Because of the noninertial relationship between radial and tangential components of position, a body that moves at a velocity that maintains a constant direction in a rotating frame accelerates outwards in the inertial frame.

Of course in classical physics, this acceleration entails a force. But in an emergent geometry, the definition of an emergent acceleration is bound up with the definition of emergent position. Rather than interpreting cosmic acceleration as a new force, it could be interpreted as an apparent effect of transverse exotic quantum correlations on systematic emergent radial motion.

It is well known that cosmic acceleration cannot simply be due to a classical centrifugal acceleration from rotation on a cosmic scale. Classical rotation is not isotropic, and the centrifugal effect from rotation at a rate $\omega = H_\Lambda$ would cause large amplitude, large scale anisotropy of cosmic radiation and expansion that is not observed.

Cosmic acceleration could however be associated with statistically isotropic rotational fluctuations in the relationship between the local and cosmic inertial frames. These average out in a large scale time or space average, so they do not conflict with cosmic isotropy data. Even if rotation has zero mean and fluctuates in random directions, its fluctuations always push outwards, so the non zero, mean square fluctuating component creates a net, secular centrifugal acceleration. Colloquially, we can say that the universe shakes apart.

Clearly, quantum-geometrical fluctuations in rotation do not have such an effect on all scales. If they did, everything would fly apart at the Planck rate. But there is a scale where the Planckian rotational acceleration matches the observed cosmic acceleration. As shown here, that scale coincides with the geometrical entanglement scale for Λ_{QCD}^{-1}, the structural scale of the strong interaction vacuum. This heuristic model suggests an explanation for the value of the cosmological constant, and predicts new effects connected with fluctuations in radial acceleration.

Absolute Value of Λ

As a rough estimate, start with the root-mean-square rate of rotational fluctuations at separation R given by Eq. (24) in Planck units, $\omega_R = R^{-3/2}$. Centrifugal acceleration thus matches cosmic acceleration— that is, $\omega_R = H_\Lambda$— for fluctuations of spatial extent

$$R_\Lambda \approx H_\Lambda^{-2/3}. \tag{46}$$

This is the Chandrasekhar-Planck entanglement scale (Eq. 8) for particle mass

$$m(R_C = R_\Lambda) = R_\Lambda^{-1/2} \approx H_\Lambda^{1/3}. \tag{47}$$

It has long been noticed that in Planck units, $H_0^{1/3}$ approximately coincides with a proton or pion mass. A direct physical relationship between cosmological Λ and a strong interaction scale— $m \approx H_\Lambda^{1/3}$— was posited long ago by Zeldovich[62], and more recently by Bjorken and others[63–67]. In the picture here, the connection is established, and the scale is set, via entanglement of the matter vacuum with geometrical rotational states. We conjecture that on small scales, rotational fluctuations are "virtual" in the sense that a net outward acceleration is not generated in the emergent space, but that above a scale R_Λ connected with strong interactions, entanglement with the matter vacuum produces a universal secular radial acceleration. At a spatial scale of R_Λ, rotational fluctuations on a light crossing time, with transverse width about equal to the strong interaction length, gives an rms angular rotation rate about equal to the Hubble constant.

The entanglement conjecture suggests a more precise way to relate the value of Λ to the matter vacuum. The effective constant Λ in the classical field equation comes about from entanglement of the subsystems represented by matter T and curvature $\mathcal{R}$. In the classical view the total information in the system is expressed in holographic terms, the area of the event horizon as determined by Λ. The number of degrees of freedom of the cosmic system can be estimated in standard physics from the matter side or from the geometry side. They agree when the 3D information density for the field vacuum equals the mean 3D density of holographic information within the cosmic horizon[24] .

The number of gravitational degrees of freedom is one quarter of the area of the cosmic event horizon in Planck units, given by πH_Λ^{-2}. Dividing by the 3-volume gives the holographic information density

$$\mathcal{I}_\Lambda = 3H_\Lambda/4. \tag{48}$$

The density of field modes per 3D volume with a UV cutoff at k_{max} is

$$\mathcal{I}_f(k_{max}) = k_{max}^3 4\pi/3(2\pi)^3. \tag{49}$$

A scalar field therefore matches cosmic information (that is, $\mathcal{I}_\Lambda = \mathcal{I}_f(k_{max})$) for a field cutoff at

$$k_{max} = k_\Lambda \equiv (H_\Lambda 9\pi^2/2)^{1/3}. \tag{50}$$

One estimate of H_Λ from current cosmological data[60, 68] yields

$$H_\Lambda = \Omega_\Lambda^{1/2} H_0 = 0.99 \pm 0.018 \times 10^{-61} \tag{51}$$

in Planck units, where H_0 denotes the current value of the Hubble constant and Ω_Λ denotes the density parameter of the cosmological constant. (The value and errors here are not meant to be definitive, but are taken for illustration from current measurements near the state of the art[24].) The value of the field cutoff scale that matches the observed cosmological information density is thus

$$k_\Lambda = 1.65 \pm 0.01 \ \times 10^{-20} m_P = 201 \pm 1.2 \text{ MeV}. \tag{52}$$

This value is close to the characteristic scale Λ_{QCD} of the strong vacuum. Estimates of that scale, from theoretical extrapolation of measurements at higher energies[69], have a fractional systematic uncertainty comparable those of the cosmological measurements. Within current systematic errors, the cosmic and matter information densities agree. The corresponding spatial coherence scale of the rotational entanglement is about

$$R_\Lambda = k_\Lambda^{-2} = 3.7 \times 10^{39} = 60\text{km}. \tag{53}$$

The scale invariance of gravity is thus broken by the strong interactions, as shown in Figure (6). The effect of the matter vacuum is imprinted here not by a coupling, but by a process related to ongoing collapse of wave function of directionally entangled fields and geometry. The scale of cosmic acceleration is set by the imperfect emergence of the inertial frame— the scale where the directional information content of the field vacuum runs up against the Planck limit. In the cosmic system, the strong interaction length in 3D maps holographically onto the Planck length in 2D.

The nature of the entanglement can be viewed from either the matter or the geometry side. On the matter side, it comes from the distance where the directional alignment of a field mode of mass $m = \Lambda_{QCD}$, an angle $(R\Lambda_{QCD})^{-1}$, equals the Planck diffraction angle (Eq. 13), $R^{-1/2}$. On the geometry side, it has to do with localization and information loss on the cosmic scale. In standard quantum mechanics, the matter wave function has an uncertainty given by Eq. (15) for a particle of mass m over duration τ; this is the spatial width of the wave function of a

particle world line, for a causal diamond extending over τ. For the matter vacuum with $m = \Lambda_{QCD}$, that equals the Chandrasekhar radius at cosmic duration, H_Λ^{-1}. Virtual rotation affects secular radial acceleration when localization in space matches the size of a field state over a Hubble time, the timescale for information from infinity to be refreshed, and the natural scale for the cosmic expansion to "notice" the mismatch of local and cosmic inertial frames. At the radius R_Λ, incoming rotational cosmic information aligns the long term average with the cosmic inertial frame, leaving a residual centrifugal acceleration at larger radii.

Although the detailed underlying mechanism of entanglement has not been rigorously modeled, these heuristic arguments suggest a relation of the Standard Model to cosmic acceleration via basic physical principles, without additional parameters, scales, or fields (see Figure 6). It is clearly too simplistic to picture cosmic acceleration as simply due to the universe "shaking apart", but there appears to be a plausible connection between two independently measurable phenomena that have no relationship in standard theory: the cosmological constant, and exotic correlations in interferometers. Since the rotational correlations could be confirmed in an experiment, the Sagnac experimental program described here could provide a concrete clue to the link between Standard Model physics and cosmic acceleration.

If this link is real, the absolute value of the cosmological constant becomes a more important physical quantity to measure than before: it is no longer an arbitrary number, but has a value that can be compared precisely, using a yet-to-be-discovered fundamental theory, with locally measured properties of standard model interactions. In terms of conventional cosmological parameters, the important quantity is the product $\Omega_\Lambda H_0^2$. A complementary remark applies to the absolute value of Λ_{QCD}; its exact absolute value may lead to a test of fundamental theory, through comparison with Λ. Ultimately, the value of the cosmological constant may be set by the value and running of the strong interaction coupling constant [70].

Coherent Fluctuations of Cosmic Acceleration

A new and unique feature of this scenario is that cosmic acceleration is not constant, but fluctuates holographically. The systematic acceleration that we measure in cosmic data is a sum of fluctuating contributions from many small scale rotational fluctuations.

In principle, there must be a locally measurable, radial component to exotic Planck motion that was not included in the scale-free analysis used for the Sagnac interferometer. It corresponds to a monopole expansion mode of spatial motion, unlike the pure tensor modes associated with gravitational waves, or pure rotational modes associated with exotic Planck fluctuations, without the entanglement of the matter vacuum. Unlike a standard cosmological constant, the radial component is not constant but fluctuates. The fluctuations are not scale free, but have a characteristic temporal frequency at about $c/R_\Lambda \approx 5000$ Hz, and a spatial coherence scale of about $R_\Lambda \approx 60$ km. In principle, these distinctive features could enable a direct experimental test of this scenario for emergent cosmic acceleration. The temporal variation and spatial coherence distinguish it from classical backgrounds.

The effect could be measured using correlated signals between spatially separate, ground-based interferometers. Normally in gravitational wave observatories, the important signal is the dark port of the Michelson interferometer, which records the arm-length difference or strain mode associated with gravitational waves. For cosmic gravitational wave sources, this signal is correlated over large interferometer separations. Here, we are interested in another signal, the common-mode or bright port signal associated with a breathing mode, which measures the sum of the arms. It should have significant power only at low frequencies (below about 5000 Hz), and should be correlated spatially only for interferometers within about 60 km of each other. This unusual combination of correlation features— a signature of emergent, quantum cosmic acceleration— is unlike any well known classical source of signal correlation.

The heuristic picture above allows a quantitative estimate of the magnitude of the effect. For an apparatus of size R_Λ, the radial velocity increases in time R_Λ/c by an amount $\Delta v \approx H_\Lambda^2 R_\Lambda^2/c$, which is also the typical fluctuation. This leads to a positional displacement difference by about $\Delta x \approx H_\Lambda^2 R_\Lambda^3/c^2$, which according to Eq. (46) is only about one Planck length. The sensitivity required to detect this effect is of course far beyond that of gravitational wave observatories[71].

This result also suggests that the exotic Sagnac correlation derived above (Eq. 39) is little affected by matter entanglement, and should apply also for interferometers much larger than R_Λ. It could also be that measurable modifications occur, for example, the cross term (Eq. 33) may no longer vanish. It could be tested in this regime by a long baseline interferometer in space, similar to earlier designs for the Laser Interferometer Space Antenna. In a triangle configuration of satellites, combinations of signals can be combined to yield estimates of all modes of motion— strain, shear, expansion, and rotation, including Sagnac modes[72, 73]. A more advanced design (e.g. ref. [74]) may be needed to isolate the exotic noise from actual sources of gravitational waves.

In this context it is useful to provide estimates of the exotic fluctuations in the units of broad band noise intensity most familiar in these studies, the broad band density in a stochastic background of gravitational waves, $\Omega_{GW} =$

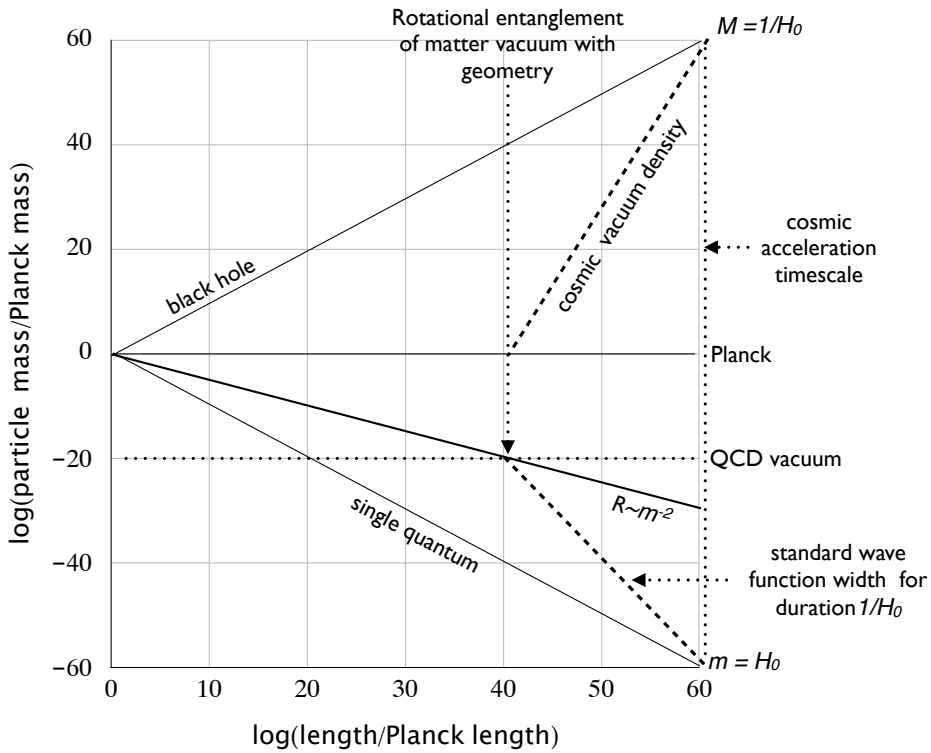

FIG. 6. Value of the cosmological constant expansion rate H_Λ (Eq. 51) determined by entanglement of quantum geometry with the matter vacuum. The value can be derived from the QCD scale Λ_{QCD} and the Planck scale in various ways, for example by matching information density in the vacuum to the holographic information of the universe (Eqs. 50, 52), or from matching the wave function width of a particle over a Hubble time via standard quantum mechanics (Eq. 15) to the Chandrasekhar scale of the vacuum. Cosmic acceleration is viewed heuristically in this scenario as the mean centrifugal acceleration from Planck rotational fluctuations of the Standard Model vacuum.

ρ_{GW}/ρ_{crit}. In Planck units, the cosmic critical density is $\rho_{crit} \approx H_\Lambda^2$. The exotic correlations create an equivalent metric strain $h \approx R^{-1/2}$ at separation R, so their equivalent apparent density at frequency $f = R^{-1}$ is $\rho_{\Xi GW} \approx h^2 f^2 \approx R^{-3}$, that is, one Planck mass per volume R^3. In cosmic units, using $R_\Lambda \approx H_\Lambda^{-2/3}$ we have $\Omega_{\Xi GW} = \rho_{\Xi GW}/\rho_{crit} \approx (R/R_\Lambda)^{-3}$. Thus on the scale R_Λ the apparent density of holographic noise in a Sagnac interferometer is about the same as a critical density of gravitational waves, while at higher frequencies (that is, above about 5000 Hz), it mimics a much higher density.

The heuristic model suggests an even more exotic correlation, in cosmic acceleration of distant sources. That is, there is a small part of acceleration in common to all cosmic sources. The contribution from the local rotational fluctuation is highly correlated for sources at all redshifts across large angles of the sky, with a pattern that is almost the same for measurements at the same time at observatories within 60 km of each other. This unusual form of quantum correlation is also a unique and distinctive signature of the proposed scenario, but again is not practical to implement in a real experiment. The acceleration of cosmic sources with time fluctuates at ≈ 5000 Hz; the fluctuation amplitude in distance on this timescale is about a Planck length.

ACKNOWLEDGMENTS

This work was supported by the Department of Energy at Fermilab under Contract No. DE-AC02-07CH11359. The author is grateful for the hospitality of the Aspen Center for Physics, which is supported by National Science

Foundation Grant No. PHY-1066293.

---

[1] C. Rovelli, *Quantum Gravity* (Cambridge University Press, 2004).
[2] A. Ashtekar, PoS **QGQGS2011**, 001 (2011), arXiv:1201.4598 [gr-qc].
[3] T. Thiemann, *Modern canonical quantum general relativity* (Cambridge University Press, 2008) arXiv:gr-qc/0110034 [gr-qc].
[4] S. B. Giddings, D. Marolf, and J. B. Hartle, Phys. Rev. D **74**, 064018 (2006).
[5] S. B. Giddings, Mod. Phys. Lett. **A22**, 2949 (2007).
[6] T. Banks, "Deriving particle physics from quantum gravity: A plan," ArXiv:0909.3223 [hep-th].
[7] T. Banks, "Holographic space-time: The takeaway," (2011), arXiv:1109.2435 [hep-th].
[8] S. Weinberg, *The Quantum Theory of Fields* (Cambridge University Press, 1996).
[9] F. Wilczek, Rev. Mod. Phys. **71**, S85 (1999).
[10] J. Polchinski, *String Theory* (Cambridge University Press, 1998).
[11] J. H. Schwarz, "Introduction to superstring theory," (2000), arXiv:hep-ex/0008017.
[12] T. Mohaupt, in *Quantum Gravity: From Theory to Experimental Search*, Lecture Notes in Physics, Vol. 631, edited by D. Giulini, C. Kiefer, and C. Lämmerzahl (Springer, Berlin; New York, 2003) pp. 173–251, arXiv:hep-th/0207249.
[13] M. R. Douglas and N. A. Nekrasov, Rev. Mod. Phys. **73**, 977 (2001).
[14] S. Hossenfelder, Living Rev. Rel. **16**, 2 (2013).
[15] Y. J. Ng and H. van Dam, Found. Phys. **30**, 795 (2000), arXiv:gr-qc/9906003 [gr-qc].
[16] G. Amelino-Camelia, Phys. Rev. D **62**, 024015 (2000).
[17] G. Amelino-Camelia, (2001), arXiv:gr-qc/0104005 [gr-qc].
[18] G. Amelino-Camelia, Living Reviews in Relativity **16** (2013), 10.12942/lrr-2013-5.
[19] O. Kwon and C. J. Hogan, "Interferometric probes of planckian quantum geometry," ArXiv:1410.8197 [gr-qc].
[20] C. J. Hogan, Phys. Rev. **D77**, 104031 (2008).
[21] C. J. Hogan, Phys. Rev. **D78**, 087501 (2008).
[22] C. J. Hogan, Phys. Rev. **D85**, 064007 (2012).
[23] C. J. Hogan and O. Kwon, (2015), arXiv:1506.06808 [gr-qc].
[24] C. J. Hogan, "Quantum entanglement of matter and geometry in large systems," (2014), arXiv:1412.1807 [gr-qc].
[25] H. Salecker and E. P. Wigner, Physical Review **109**, 571 (1958).
[26] E. J. Post, Rev. Mod. Phys. **39**, 475 (1967).
[27] K. U. Schreiber, A. Gebauer, H. Igel, J. Wassermann, R. B. Hurst, and J.-P. R. Wells, Comptes Rendus Physique **15**, 859 (2014), the Sagnac effect: 100 years later / L'effet Sagnac : 100 ans aprés.
[28] R. K. Lanza, *Experimental Limits on Gravitational Waves in the MHz Frequency Range*, Ph.D. thesis, The University of Chicago (2015).
[29] A. Zeilinger, Rev. Mod. Phys. **71**, S288 (1999).
[30] Č. Brukner and A. Zeilinger, Foundations of Physics **39**, 677 (2009), arXiv:0905.0653 [quant-ph].
[31] Holometer,.
[32] S. Chandrasekhar, Astrophys. J. **74**, 81 (1931).
[33] A. G. Cohen, D. B. Kaplan, and A. E. Nelson, Phys. Rev. Lett. **82**, 4971 (1999).
[34] J. M. Bardeen, B. Carter, and S. Hawking, Commun. Math. Phys. **31**, 161 (1973).
[35] J. D. Bekenstein, Phys. Rev. **D7**, 2333 (1973).
[36] J. D. Bekenstein, Phys. Rev. **D9**, 3292 (1974).
[37] S. Hawking, Nature **248**, 30 (1974).
[38] S. Hawking, Commun. Math. Phys. **43**, 199 (1975).
[39] G. 't Hooft, "Dimensional reduction in quantum gravity," ArXiv:gr-qc/9310026.
[40] L. Susskind, J. Math. Phys. **36**, 6377 (1995).
[41] R. Bousso, Rev.Mod.Phys. **74**, 825 (2002), arXiv:hep-th/0203101 [hep-th].
[42] T. Jacobson, Phys. Rev. Lett. **75**, 1260 (1995).
[43] E. Verlinde, JHEP **1104**, 029 (2011).
[44] N. Margolus and L. B. Levitin, *4th Workshop on Physics and Computation (PhysComp 96) Boston, Massachusetts, November 22-24, 1996*, Physica **D120**, 188 (1998), arXiv:quant-ph/9710043 [quant-ph].
[45] S. Lloyd, (2012), arXiv:1206.6559 [gr-qc].
[46] C. M. Caves, Phys. Rev. Lett. **45**, 75 (1980).
[47] C. M. Caves, Phys. Rev. **D23**, 1693 (1980).
[48] C. M. Caves, K. S. Thorne, R. W. P. Drever, V. D. Sandberg, and M. Zimmermann, Rev. Mod. Phys. **52**, 341 (1980).
[49] C. Gardiner and P. Zoller, *Quantum Noise: A Handbook of Markovian and Non-Markovian Quantum Stochastic Methods with Applications to Quantum Optics*, Springer Series in Synergetics (2004).
[50] A. Ashtekar, J. C. Baez, and K. Krasnov, Adv. Theor. Math. Phys. **4**, 1 (2000), arXiv:gr-qc/0005126 [gr-qc].
[51] A. Ashtekar, J. Baez, A. Corichi, and K. Krasnov, Phys. Rev. Lett. **80**, 904 (1998), arXiv:gr-qc/9710007 [gr-qc].
[52] I. N. trans. A. Motte (1729) and F. C. (1934), *Philosophiae Naturalis Principia Mathematica* (University of California

Press, 1934).
[53] R. Rynasiewicz, in *The Stanford Encyclopedia of Philosophy*, edited by E. N. Zalta (2014) summer 2014 ed.
[54] R. DiSalle, in *The Stanford Encyclopedia of Philosophy*, edited by E. N. Zalta (2009) winter 2009 ed.
[55] J. B. Hartle, in *The Quantum Structure of Space and Time* (2006) pp. 21–43, arXiv:gr-qc/0602013 [gr-qc].
[56] S. Weinberg, Rev. Mod. Phys. **61**, 1 (1989).
[57] A. G. Riess *et al.* (Supernova Search Team), Astron. J. **116**, 1009 (1998), arXiv:astro-ph/9805201 [astro-ph].
[58] S. Perlmutter *et al.* (Supernova Cosmology Project), Astrophys. J. **517**, 565 (1999), arXiv:astro-ph/9812133 [astro-ph].
[59] J. Frieman, M. Turner, and D. Huterer, Ann. Rev. Astron. Astrophys. **46**, 385 (2008), arXiv:0803.0982 [astro-ph].
[60] K. A. Olive *et al.* (Particle Data Group), Chin. Phys. **C38**, 090001 (2014).
[61] A. Joyce, B. Jain, J. Khoury, and M. Trodden, Phys. Rept. **568**, 1 (2015), arXiv:1407.0059 [astro-ph.CO].
[62] Y. B. Zeldovich, Physics-Uspekhi **11**, 381 (1968).
[63] J. D. Bjorken, in *Proceedings, 5th Meeting on CPT and Lorentz Symmetry (CPT 10)* (2010) pp. 1–5, arXiv:1008.0033 [hep-ph].
[64] J. D. Bjorken, Phys. Rev. **D67**, 043508 (2003), arXiv:hep-th/0210202 [hep-th].
[65] A. Randono, Gen. Rel. Grav. **42**, 1909 (2010), arXiv:0805.2955 [gr-qc].
[66] S. Carneiro, Int. J. Mod. Phys. **D12**, 1669 (2003), arXiv:gr-qc/0305081 [gr-qc].
[67] R. Schutzhold, Phys. Rev. Lett. **89**, 081302 (2002), arXiv:gr-qc/0204018 [gr-qc].
[68] A. G. Riess, L. Macri, S. Casertano, H. Lampeitl, H. C. Ferguson, A. V. Filippenko, S. W. Jha, W. Li, and R. Chornock, Astrophys. J. **730**, 119 (2011), [Erratum: Astrophys. J.732,129(2011)], arXiv:1103.2976 [astro-ph.CO].
[69] K. A. Olive, et al. (Particle Data Group), Chin. Phys. **C38**, 090001 (2014).
[70] C. J. Hogan, Rev. Mod. Phys. **72**, 1149 (2000), arXiv:astro-ph/9909295 [astro-ph].
[71] R. X. Adhikari, Reviews of Modern Physics **86**, 121 (2014), arXiv:1305.5188 [gr-qc].
[72] C. J. Hogan and P. L. Bender, Phys. Rev. **D64**, 062002 (2001), arXiv:astro-ph/0104266 [astro-ph].
[73] C. Hogan, in *9th LISA Symposium*, Astronomical Society of the Pacific Conference Series, Vol. 467, edited by G. Auger, P. Binétruy, and E. Plagnol (2013) p. 17, arXiv:1208.3703 [quant-ph].
[74] C. Cutler and D. E. Holz, Phys. Rev. D **80**, 104009 (2009), arXiv:0906.3752 [astro-ph.CO].
[75] A. Connes, *Noncommutative Geometry* (Academic Press, 1994).
[76] A. Connes and M. Marcolli, "A walk in the noncommutative garden," ArXiv:math/0601054.
[77] N. Seiberg and E. Witten, JHEP **9909**, 032 (1999).
[78] L. D. Landau and E. M. Lifshitz, *Quantum Mechanics: Non-Relativistic Theory*, 3rd ed. (Pergamon, Oxford, 1977) secs 26 & 27.
[79] G. E. Stedman, Reports on Progress in Physics **60**, 615 (1997).
[80] B. Culshaw, Measurement Science and Technology **17**, R1 (2006).
[81] A. A. Michelson and H. G. Gale, Astrophys. J. **61**, 140 (1925).

Appendix A: A Toy Model of Quantum Geometry: Spin Algebra of Quantum Position Operators

We summarize here a simple, antisymmetric spin algebra commutator of 3-dimensional position operators that serves as a toy model for a quantum-geometrical correlation of positions (Eq. 30). We show that the system has a holographic density of position states, and derive the transverse variance of the position wave function used above to estimate the Sagnac correlation function (Eqs. 36, 39) and rotational fluctuations (Eq. 24). Apart from the Planckian coefficients, most of the algebra here is standard in the literature on quantum angular momentum, and is quoted here for convenience, similar to a summary of the same system in ref. [23].

This system includes no model of dynamics, and also has no direct relation to the standard literature on noncommutative geometry or fields[13, 75–77]. , However, it provides a consistent holographic quantum model for macroscopic geometrical relationships of Planck scale elements in three dimensions. The main point is to display explicitly a quantum system where the three dimensions of space map onto two dimensions, one radial/longitudinal and one directional. The mapping is the same as that for spins: the radial position dimension corresponds to the total angular momentum, and the directional position dimension corresponds to its projection onto any axis.

Consider position operators $\hat{x}_i$ that obey the standard spin algebra with Planck scale commutator:

$$[\hat{x}_i, \hat{x}_j] = \hat{x}_k \epsilon_{ijk} i \ell_P. \tag{A1}$$

These represent quantum-geometrical objects in three spatial dimensions. Their wave functions live on a single spacelike hypersurface. They represent projections of world line wave functions; that is, the 3-D correlation is

$$\Xi_{ij}(x_k, \tau = 0) = \epsilon_{ijk} x_k \ell_P, \tag{A2}$$

which is the basis of the correlation analysis above (Eq. 30). This system can be analyzed in exactly the same way as standard angular momenta, albeit with a completely different physical application.

In analogy with the total angular momentum in a spin system, define a "separation operator", that has dimensions of area:

$$|\hat{x}|^2 \equiv \hat{x}_i \hat{x}_i, \tag{A3}$$

It commutes with $\hat{x}_i$ operators, so it behaves classically:

$$[|\hat{x}|^2, \hat{x}_i] = 0, \tag{A4}$$

This operator takes discrete eigenvalues:

$$|\hat{x}|^2 |l\rangle = l(l+1)\ell_P^2 |l\rangle. \tag{A5}$$

The discrete eigenvalues correspond to classical values of separation R according to:

$$R^2 \equiv l(l+1)\ell_P^2 \approx l^2 \ell_P^2 \tag{A6}$$

where l are positive integers, quantum numbers of eigenstates of $|\hat{x}|^2$.

Let l_i denote eigenvalues of position components projected in direction i. In a state $|l\rangle$ of separation number l, the projected position operator $\hat{x}_i$ can have eigenvalues in units of ℓ_P,

$$l_i = l, l-1, \ldots, -l, \tag{A7}$$

giving $2l+1$ possible values. In an eigenstate with a definite value of position in direction i,

$$\hat{x}_i |l, l_i\rangle = l_i \ell_P |l, l_i\rangle. \tag{A8}$$

The total number of position eigenstates in a 3-sphere is

$$\mathcal{N}_{Q3S}(R) = \sum_{l=1}^{l_R} (2l+1) = l_R(l_R+2) = (R/\ell_P)^2, \tag{A9}$$

where the last equality applies in the large l limit. Thus, the number of quantum-geometrical position eigenstates in a volume scales holographically, as the surface area in Planck units. This simple model of quantization closely resembles (but is not exactly the same as) the spectrum of area states more rigorously derived within the framework of loop quantum gravity (Eq. 17).

Direct calculation (e.g., ref.[78]) also leads to the following product of amplitudes for measurements of either of the transverse components $\hat{x}_j$, with $j \neq i$:

$$\langle l_i | \hat{x}_j | l_i - 1\rangle \langle l_i - 1 | \hat{x}_j | l_i\rangle = (l + l_i)(l - l_i + 1)\ell_P^2/2, \tag{A10}$$

again for any i. The left side of equation (A10) can be interpreted as the expected value for the operator

$$\hat{x}_j |l_i - 1\rangle \langle l_i - 1 | \hat{x}_j \tag{A11}$$

for components with $j \neq i$, in a state $|l_i\rangle$ of definite $\hat{x}_i$. For $l >> 1$ and $l_i \approx l$, this corresponds to the expected variance in components of position transverse to separation:

$$\langle \hat{x}_j | l_i - 1\rangle \langle l_i - 1 | \hat{x}_j\rangle \to \langle \hat{x}_j^2 \rangle. \tag{A12}$$

We can rewrite this as a formula for the variance of the wave function $\hat{x}_\perp$ in any direction transverse to separation, given by the right hand side of Eq. (A10) in the limit of $l >> 1$, for $l \pm l_i = 1$ (or indeed for any value of $|l - l_i| << l^{1/2}$):

$$\langle \hat{x}_\perp^2 \rangle = R\ell_P. \tag{A13}$$

This simple result is used above to set the scale of transverse position variance in phenomenological estimates, for example in Eqs. (36) and (24).

The same algebra can be applied to actual angular momentum. With j and $\hbar$ in place of x and ℓ_P, the width of the wave function for measured transverse components of standard angular momentum, in the limit of large $|j|$, is given by:

$$\langle \hat{j}_\perp^2 \rangle = |j|\hbar. \tag{A14}$$

This simple formula does not explicitly appear in standard treatments of angular momentum.

Appendix B: Experiment Concept: Superluminally Cross-Correlated, Co-located, Power-Recycled Sagnac Interferometers

The exotic correlation (Eq. 39) may be detectable using an apparatus similar to the Fermilab Holometer, reconfigured to measure pure rotational modes. The Holometer achieves the sensitivity needed to measure exotic quantum-geometrical correlations by sampling and cross-correlating signals, from two separate but spatially adjacent power-recycled Michelson interferometers, at superluminal rates— that is, many times per light-crossing.

A measurement of the exotic rotational correlation (Eq. 39) could be achieved with a similar experiment, configured as two Sagnac interferometers that enclose overlapping areas. To achieve shot-noise-limited sensitivity, such a device would require superluminally correlated power-recycled Sagnac interferometer cavities. This concept requires more development. The most advanced Sagnac interferometers operating today are active ring laser systems optimized for much lower frequencies, and used in ultra high precision applications such as geodesy [26, 79].

Sagnac interferometers are sometimes made with circuits of optical fibers[80]. Although in some ways that option is much simpler than the power-recycled cavity, it is not considered here, partly because shot noise limited performance at high power has not been demonstrated as it has for cavities. The exotic correlations would add a new source of noise to Sagnac-configured gravitational wave interferometers, such as some designs for the Laser Interferometer Space Antenna[72].

The size of the experimental apparatus is determined by a trade between competing effects: a larger device probes lower frequencies, where photon shot noise is smaller compared to the signal, but technical and environmental noises are larger. The size of the system chosen for illustration here is based on the successful demonstration[28] of shot-noise-limited performance in the Holometer at the same frequency, which yields sufficient sensitivity to measure the predicted correlation.

In the following, unless explicitly stated, units of length and time are Planck values $\ell_P = \sqrt{\hbar G/c^3} = 1.616 \times 10^{-35}$ meters, $t_P = \sqrt{\hbar G/c^5} = 5.4 \times 10^{-44}$ seconds.

- Two square Sagnac interferometers, each 20 meters on a side, $L = 1.2 \times 10^{36}$, are placed so their areas substantially overlap. Signals are cross correlated to separate the in-common exotic correlations from standard forms of uncorrelated quantum and technical noise.
- Each is a resonant power-recycled cavity to reduce shot noise.
- The area is 400 square meters, $A_0 = L^2 = 1.5 \times 10^{72}$.
- The perimeter is 80 meters, $P_0 = 5 \times 10^{36}$.
- With normalization the standard Planck length, the rms fluctuation in phase at the beamsplitter (Eq. 40) is $\Xi_0^{1/2} = (2A_0/P_0)^{1/2} = 8 \times 10^{17} = 1.2 \times 10^{-17}$ meters, or 12 attometers, a level measurable with Holometer technology. With the Loop Quantum Gravity normalization (Eq. 42), it is smaller by a factor of $\sqrt{\ell_Q/\ell_P} = 0.946$. The absolute value of the correlation carries information about details of new Planck scale physics, which motivates absolute calibration at better than a few percent precision.
- The spacing (Eq. 21) between loop area states for the 400 square meter total area eigenstate is $\Delta A = 2L\ell_Q = 2 \times 10^{36} = 5 \times 10^{-34}\mathrm{m}^2 = 23$ square attometers.
- The equivalent angular rotation rate corresponding to the correlation amplitude is about

$$\langle \omega^2 \rangle^{1/2} = 2\pi (2A_0/P_0)^{1/2} P_0^{-2} = 2 \times 10^{-55} = 3.7 \times 10^{-12} \text{ Hz}, \tag{B1}$$

  or about one radian per 10^4 years.
- The peak frequency of the signal fluctuation spectrum (the Fourier transform of Eq. 39) occurs at about $f \approx P_0^{-1} = 2 \times 10^{-37} = 3.7$ MHz. As in the Holometer, a high bandwidth sampling and correlation system is necessary to measure broad band spectra well below photon shot noise in this band.
- The classical phase shift between the two directions around the circuit, from the earth's rotation, first measured in ref. [81], is

$$\delta\phi/2\pi = c\Delta t/\lambda = 4A_0\omega_{earth}\sin(\theta_{lat})/c = 3.9 \times 10^{-4}, \tag{B2}$$

  using Eq. (41), laser wavelength $\lambda = 10^{-6}$ m, and the latitude of Fermilab, $\theta_{lat} = 42$ degrees.