700 KW MAIN INJECTOR OPERATIONS FOR NOνA AT FNAL*

P. Adamson†, Fermi National Accelerator Laboratory, Batavia, IL 60510, USA

Abstract

Following a successful career as an antiproton storage and cooling ring, the Fermilab Recycler was repurposed as a proton stacker as part of the NOνA project, in order to increase the maximum NuMI beam power from 400 kW to 700 kW. Using the Recycler to prepare beam for acceleration in the Main Injector, we have been able to increase the beam power delivered to NuMI to a sustained weekly average in excess of 400 kW and a best hourly average of 482.8 kW. I discuss the commissioning progress to date, and describe the remaining steps along the way to achieving the 700 kW design goal.

NOνA

The NOνA [1], [2] (NuMI Off-axis ν_e Appearance) long-baseline experiment in the Fermilab NuMI neutrino beam aims to make precision measurements of muon-neutrino survival and muon- to electron-neutrino oscillation for both neutrino and antineutrino beams traveling from Fermilab to a "Far Detector" 810 km away in Ash River, MN. It aims to address the outstanding questions in neutrino physics—whether the neutrino mass eigenstates have "normal" or "inverted" mass ordering (whether the dominant components of the electron neutrino are the lightest or the heaviest states); whether the mixing angle θ_{23} is maximal, or if it differs from 45°, whether it is larger or smaller; whether the CP symmetry is violated in the neutrino sector; and whether the three-flavor PMNS matrix is sufficient to explain neutrino oscillations, or if new physics is required.

In order to accomplish these goals, as well as building a massive (14 kT) Far Detector, the NOνA project [3] upgraded the beam power delivered to the NuMI facility from a nominal 400 kW to a nominal 700 kW.

BEAM DELIVERY TO NUMI

The NuMI beam begins as H^- ions accelerated to 400 MeV in a normal-conducting linac. On injection to the Booster, they pass through a stripping foil which converts the H^- to protons. The injected beam typically wraps the Booster circumference about 13 times to achieve a normal intensity of around 4×10^{12} protons per Booster batch. The booster is a 15 Hz resonant synchrotron, and accelerates protons to 8 GeV KE (8.9 GeV/c momentum). Not all 15 Hz cycles contain beam or rf voltage. An overview of the Fermilab accelerator complex is shown in figure 1.

In the Collider era, the Booster was injected into the Main Injector, and accelerated to 120 GeV/c. The Main Injector circumference is seven times that of Booster, allowing six

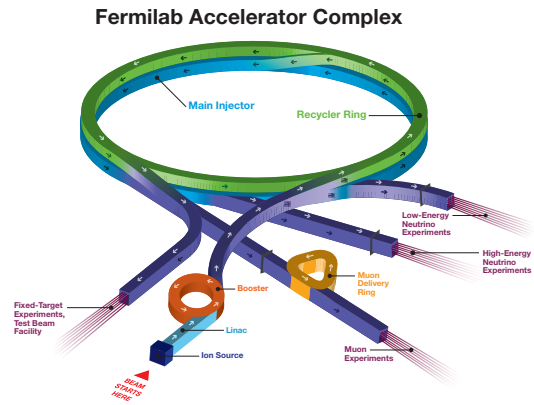

Figure 1: Fermilab accelerator complex in 2015

Booster batches to fit around the machine once a gap to accommodate the rise time of the extraction and abort kickers has been left. Slip-stacking [4] was used to combine two Booster batches into one for five of these six batches. The need to provide two kicker gaps in order to share this beam between the antiproton source and the NuMI beamline precluded slip-stacking the final batch.

The NOνA upgrade moves the slip-stacking process from the Main Injector to the Recycler—an 8.9 GeV/c permanent magnet machine in the Main Injector tunnel no longer needed in its prior role as an antiproton storage and cooling ring. Separating the time-consuming accumulation of Booster batches at 8 GeV from the acceleration allows the Main Injector to continuously ramp up and down, while the Recycler accumulates and slip-stacks the beam for the next pulse. As shown in figure 2, for 12-batch slip-stacking, Recycler has begun preparing the next pulse before Main Injector has extracted the previous one.

In addition to moving the slip-stacking process to Recycler, the Main Injector ramp rate was increased from 204 GeV/s to 240 GeV/s. This required the addition of two extra rf stations in Main Injector (bringing the total from 18 to 20) in order to maintain the same bucket height at the faster rate of acceleration, and an upgrade to the power supplies and transformers for the quadrupole bus in order to achieve the necessary increase in voltage. In addition, the number of batches is increased from eleven to twelve, which is possible now that NuMI is the only user of the beam on this cycle. This last, an increase of less than 10%, is the only increase in per-pulse intensity provided by this upgrade. The rest of the increase in design power from 400 kW to 700 kW comes from the reduction in Main Injector cycle time from 2.2 s to

* Operated by Fermi Research Alliance, LLC under Contract No. De-AC02-07CH11359 with the United States Department of Energy.
† pa@fnal.gov

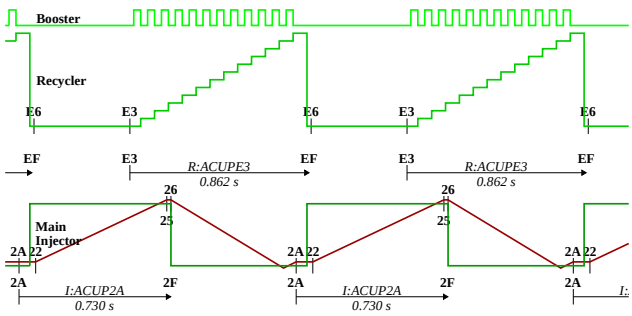

Figure 2: Relative timing of Booster, Recycler and Main Injector cycles for NOνA-era NuMI operation. Beam in each machine is shown in green, and Main Injector momentum in red. The start and end of cycle clock events for MI and Recycler are also shown.

1.33 s enabled by the use of the Recycler and the increased MI ramp rate.

In order to convert the Recycler from an antiproton storage ring to a proton stacker, many significant alterations were required. These included a rebuilding of one straight section to remove the lattice insert for electron cooling and replace it with a standard FODO lattice, the installation of a 53 MHz rf system for slip-stacking, new injection and extraction beamlines and their associated kicker magnets, new BPM electronics for the 53 MHz beam, upgrades to the Beam Loss Monitor system to allow it to be continuously active, additional quadrupole and sextupole magnets to allow a wider tuning range for both tune and chromaticity, and replacement end shims for the gradient magnets around the ring to change the machine's base tune and chromaticity.

These modifications were installed in a 16 month long shutdown, between May 2012 and September 2013. After the completion of the shutdown, the Main Injector provided beam for NuMI and the SY120 fixed target program (SeaQuest and test beams) while the new recycler was commissioned in parallel.

PIP

These upgrades to the Recycler and Main Injector enable the delivery of 700 kW beam power, but to achieve this it is necessary to provide enough protons to the Recycler. The 700 kW NOνA upgrade by itself requires an increase in both number of Booster cycles with beam and in total proton throughput. When considered alongside the remainder of the laboratory's planned physics program—beam must also be provided to the Booster Neutrino Beamline for the MicroBooNE experiment, and to the muon campus for g-2 and mu2e—the required output of the proton source is approximately doubled to 2.3×10^{17} protons per hour, and the beam pulse rate is doubled from about 7.5 Hz to the maximum 15 Hz.

To achieve this, improvements to the Linac and Booster are being made by the Proton Improvement Plan (PIP) [5], [6], [7]. These many upgrades are made to reduce beam losses, to eliminate elderly equipment that is unreliable or for which spare parts can no longer be obtained, and to increase the number of Booster cycles that can contain beam.

The Booster pulse rate is limited by the lack of cooling in the rf cavity tuners. These thermal limitations restrict the rate at which the rf system can be pulsed (and so beam accelerated) to about 7.5 Hz. Beginning in January 2012, the PIP program removed Booster cavities from the tunnel two at a time, dismantled them, re-built and refurbished the tuners, including the addition of water cooling, and re-installed the refurbished cavities in the tunnel. Booster had 19 rf stations; the minimum number of operational stations to accelerate the nominal 4.3×10^{12} protons per pulse is 17. In late April 2015, the 17th upgraded cavity was installed in the Booster tunnel, enabling the Booster rf to be pulsed at 15 Hz. By the end of 2015, the total number of stations will have been increased to 20, with an additional two new cavities scheduled to be built and installed the following year.

RECYCLER COMMISSIONING

After the installation of the Recycler upgrades in the 2012-2013 shutdown, the complex was restated using box-car stacking in Main Injector to deliver a typical 240 kW to the NuMI target (a peak of 2.5×10^{13} protons every 1.67 s), whilst the Recycler commissioning process began in parallel. The initial months were spent correcting aperture problems in the ring—a necessarily sequential process, as it is necessary to correct the worst aperture before the next worst is revealed.

Following this, there followed a period of dedicated beam scrubbing, with the goal of being able to run 2×10^{13} protons every 1.33 s—the break-even intensity for operational use of the Recycler. Initially, a single pulse of around 10^{13} protons caused an increase in vacuum pressure from around 10^{-10} to 10^{-7} torr. Beginning with one and then two pulses per minute, the intensity was gradually increased as the vacuum response decreased, until the goal was met.

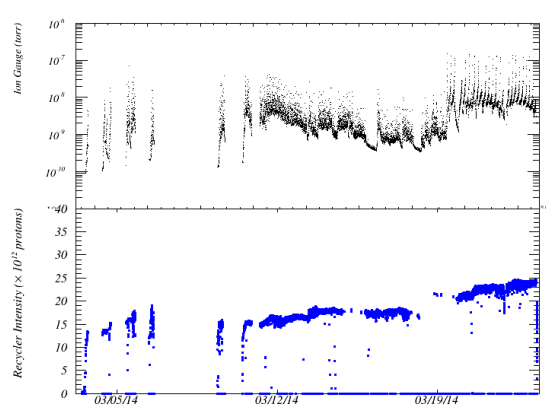

Figure 3: Pressure at a typical ion gauge and beam intensity for one and two pulses per minute dedicated beam scrubbing run. At the end of this time period, continuous running of 2×10^{13} protons per pulse every 1.33 s could be sustained.

After another period of commissioning—for the beam loss monitor upgrade, the transverse damper system, and further aperture improvements, the Recycler was brought into regular operational use for NuMI beam in early August 2014. The use of Recycler as an accumulator for the six-batch box-car stacking cycle allowed the cycle time to be reduced from 1.67 s to 1.33 s, with a corresponding increase in typical beam power from 240 kW to 320 kW, as shown in figure 4.

Following a maintenance shutdown in the fall, the process of commissioning slip-stacking in the Recycler began. This is a phased process, beginning with "2+6" mode slip-stacking—inject and decelerate two Booster batches, and combine with six more—and proceeding through "4+6" and "6+6" modes. At each step, the new mode is first placed into operation at a reduced intensity, to match the beam power and total proton throughput of the previous mode, and then the intensity is increased to a nominal maximum of 4.3×10^{12} protons per batch. Figure 4 shows the first such transition, from 6-batch mode to "2+6" mode followed by a continuous increase in intensity to the nominal maximum.

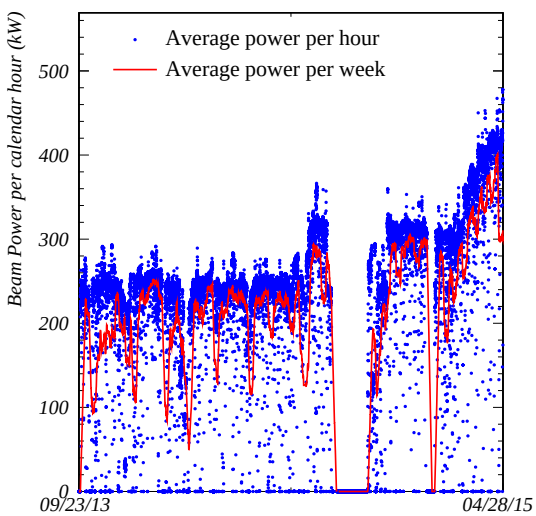

Figure 4: Beam power delivered to NuMI since the end of the long shutdown in 2013. The step up in the center of the plot, from a typical 240 kW to 320 kW, is caused by the reduction in cycle time enabled by using the Recycler. The increase in the final two months is due to the use of "2+6" mode slip-stacking. The best calendar hour was 482.8 kW, and the average power for 168 consecutive hours was 400.4 kW.

Roadmap to 700 kW

The performance to date, with a peak hourly power of 482.8 kW, has reached the design intensity for the "2+6" slip-stacking mode. Increasing the power beyond this level requires the Booster rf cavity refurbishment to be completed, as Booster pulse rates greater then 7.5 Hz are required. The 17th refurbished Booster cavity was installed in late April 2015, enabling higher Booster pulse rates. Further phased increases are planned, operating "4+6" mode after the three month 2015 summer shutdown, increasing intensities enabled by decreasing losses per cycle in the proton source [7], and culminating in the "6+6" slip-stacking mode delivering 700 kW of proton beam in February 2016.

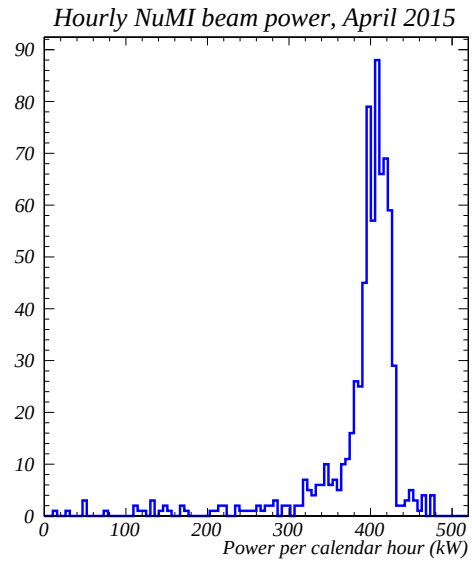

Figure 5: Hourly beam power to NuMI for April 2015.

RECYCLER FAST HORIZONTAL INSTABILITY

As previously reported in [9], when we started operating the Recycler to deliver beam to NuMI, in August 2014, we observed at high intensities a fast horizontal instability in the few hundred machine turns after injection, with a growth rate of 10-15 machine turns. The instability, shown in figure 6, is only driven in the horizontal plane—at our normal operating point, there is some coupling of this motion to the vertical plane. It has a strong dependence on linear charge density (bunch length).

This is a single-batch effect: the instability only affects the newly-injected batch, and does not transfer to other batches already in the machine. In fact, existing beam in the machine provides extra stability. In August 2014, the intensity threshold for the instability was observed to be around 25% higher when injecting into a machine which already contained one or more batches of beam than when injecting into an empty ring. The stabilizing effect depends only on the total number of protons already present in the machine—the distribution of those protons into a smaller number of high intensity bunches or a larger number of low intensity bunches is observed to have no effect.

After the 2014 fall shutdown, the instability threshold was observed to have increased, and now does not occur for normal operations, and will not cause difficulties for running at 700 kW. By manipulating bunch rotation in the

Booster, it is possible to create shorter bunches that undergo the instability, rendering it accessible to special machine studies.

We have excluded the rf and damper systems as possible causes of this instability, and measurements of the ring impedance are consistent with expectations from the resistive wall (which is not nearly strong enough to cause a 10-15 turn growth rate). The electron cloud is strong enough to cause this growth rate, but we do not yet have a model which explains all the details (such as the stabilizing effect of other beam in the machine).

The instability does not occur in the Main Injector under the same conditions (or even with shorter bunches). There are few differences between the two machines that are likely to be significant. One possibility is that the Recycler has combined function magnets whereas the Main Injector has separate quads and dipoles. A similar horizontal instability has been reported for short bunch lengths at extraction in the CERN PS [8]. This has been reported as being due to the electron cloud. The CERN PS, like the Recycler, is a combined function machine.

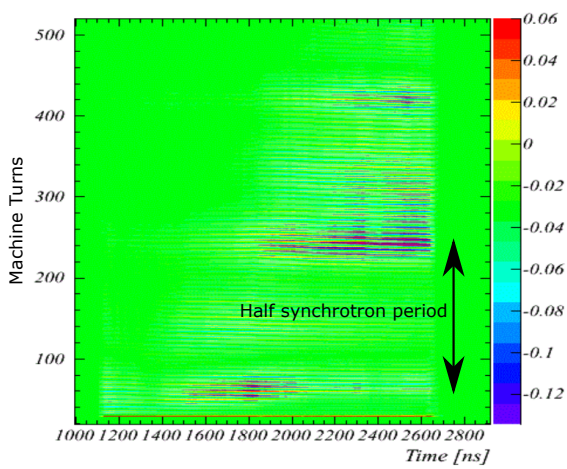

Figure 6: The fast recycler instability in the horizontal plane. The color scale represents horizontal motion, in arbitrary units. Shown is the first injected batch (1.6 μs) for about 500 turns after injection. The incoming beam is not perfectly matched to the rf bucket here, and the instability is seen to occur at bunch length minima, and in the center and the end of the batch.

FUTURE PLANS

In the current 400 kW operation (see table 1), Recycler loses approximately 1.5% of the beam, for a power loss of 440 W. Spread out over the 3.3 km circumference of the machine, this loss would not be considered large, but in practice these transverse losses congregate at a few spots around the ring where the aperture is limited.

We plan to control these losses with a collimation system similar to that installed in the Main Injector [11]. The Main Injector system currently collects around 95% of the losses at start of ramp. The design of such a system for Recycler is constrained by space limitations—in most of the ring, the Recycler centerline is less than a foot below the ceiling; two short areas of the ring have higher ceilings offering space for the large steel/marble secondary collimator required. The design of this system is in progress, and we hope to be able to install it in the 2016 summer shutdown.

Table 1: Typical Beam Loss in Recycler and Main Injector during 400kW operation

	Fractional loss	**Power Loss**
Recycler	1.5%	440 W
MI start of ramp	2%	670 W
MI transition	0.05%	40 W

Other major planned upgrades for Recycler include the installation of a 2.5 MHz rf system and a new extraction line to support beam delivery for the g-2 and mu2e experiments, and a vacuum system upgrade, replacing end-of-life titanium sublimation pumps with ion pumps around the whole Recycler. The ultra-high vacuum that is possible with TSPs isn't necessary when the beam is in the machine for less than a second, and the use of TSPs requires a week or more of bakeout for any vacuum sector that is opened, which has obvious operational consequences.

CONCLUSION

The Fermilab accelerator complex has been upgraded in order to deliver 700 kW proton beam power to the NuMI facility for the NOνA experiment. Progress towards achieving this goal is well under way, with the complex routinely delivering an average of over 400 kW, and a best hourly peak of 482.8 kW. The commissioning process is on schedule, and is expected to achieve the 700 kW design goal in February 2016.

REFERENCES

[1] D. S. Ayres et al., "The NOvA Technical Design Report," FERMILAB-DESIGN-2007-01

[2] A. Habig, "The NOvA experiment," Nucl. Phys. Proc. Suppl. 229-232 (2012) 460

[3] P. Derwent, "Accelerators for Intensity Frontier Research," Proceedings of IPAC2012, New Orleans, Louisiana, USA (2012), pp. 4185-4189

[4] K. Seiya et al., "Multi-batch Slip Stacking in the Main Injector at Fermilab," Proceedings of PAC07, Albuquerque, New Mexico, USA (2007), pp. 742-744

[5] W. Pellico et al., "FNAL—The Proton Improvement Plan (PIP)," Proceedings of HB2014, East Lansing, Michigan, USA (2012)

[6] K. Seiya, "Booster Upgrade for 700kW NOvA Operations," Proceedings of HB2014, East Lansing, Michigan, USA (2012)

[7] K. Seiya et al., “Beam studies for the Proton Improvement Plan (PIP)—Reducing beam loss at the Fermilab Booster”, THPF131, *These Proceedings*, IPAC’15, Richmond, VA, USA (2015).

[8] R. Steerenberg et al., "Nominal LHC beam instability observations in the CERN proton synchrotron," Proceedings of PAC07, Albuquerque, New Mexico, USA (2007), pp. 4222-4224

[9] J. Eldred et al., "Fast Transverse Instability and Electron Cloud Measurements in Fermilab Recycler," Proceedings of HB2014, East Lansing, Michigan, USA (2012)

[10] B. C. Brown et al., "The Fermilab Main Injector: high intensity operation and beam loss control," Phys. Rev. ST Accel. Beams 16 (2013) 7, 071001

[11] B. C. Brown et al., "Fermilab Main Injector Collimation Systems: Design, Commissioning and Operation," Proceedings of PAC09, Vancouver, Canada (2009)