This is the author's version of an article that has been published in this journal. Changes were made to this version by the publisher prior to publication.
The final version of record is available at http://dx.doi.org/10.1109/TASC.2015.2510336

FERMILAB-CONF-15-633-TD

The CLAS12 Torus Detector Magnet at Jefferson Laboratory

Cesar Luongo, Joshua Ballard, George Biallas, Latifa Elouadrhiri, Ruben Fair, Probir Ghoshal, Dave Kashy, Robert Legg, Orlando Pastor, Renuka Rajput-Ghoshal, Claus Rode, Mark Wiseman, Glenn Young, Luciano Elementi, Steven Krave, Alexander Makarov, Fred Nobrega, George Velev

***Abstract*—The CLAS12 Torus is a toroidal superconducting magnet, part of the detector for the 12 GeV accelerator upgrade at Jefferson Lab. The coils were wound/fabricated by Fermilab, with JLab responsible for all other parts of the project scope, including design, integration, cryostating the individual coils, installation, cryogenics, I&C, etc. The paper provides an overview of the CLAS12 Torus magnet features, and serves as a status report of its installation in the experimental hall. Completion and commissioning of the magnet is expected in 2016.**

***Index Terms*—Superconducting Magnets, Detector Magnets, CLAS12 Torus, Conduction-Cooling**

I. Introduction

The 12 GeV Upgrade Project at Jefferson Lab [1] consists of an upgrade to the accelerator and four experimental halls A, B, C and D. In Hall B, The CEBAF Large Acceptance Spectrometer (CLAS) is upgraded to CLAS12 and optimized for detection of multi-particles in the final state. The CLAS12 Torus magnet is based on six superconducting coils arranged around the beam line allowing uniform coverage of a large angular and momentum range of produced particles. The toroidal configuration offers a field that is always transverse to the particle trajectory, and a field-free region around the target, allowing operation of polarized targets. The magnet was designed by JLab, and wound and potted by Fermilab (FNAL). This is a brief summary of the Torus features, and an update on the magnet portion of the project, expected to be completed in 2016.

II. Magnet Design

A. Magnet Parameters

The Torus consists of six coils arranged as a single electrical circuit (series connection) and cooled by supercritical helium at 4.6 K, also in a configuration of a single circuit. The coils are all mechanically connected to the central (cold) hub, and connected to each other via hex beams (completing the hexagon), two beams per sector downstream (DS) and upstream (US) with respect to the electron beam that runs through the hub aperture. The hex beams carry the elements to make the hydraulic and electrical connections between coils, it also contains re-coolers (counter flow circuit) that removes the heat loads to a 1 atm helium circuit, ensuring thermal symmetry among the six coils. All coils and hex beam represent a single vacuum space. Major magnet parameters are given in Table I, further details of the magnet design are covered in [3].

TABLE I
CLAS12 Torus Magnet Parameters

Magnet Parameter	Value (Units)
Dimensions (WxLxH)	7 x 8 x 10 (m)
Total Weight	25,500 (kg)
Stored Energy	14 (MJ)
Current	3770 (A)
Peak Field	3.6 (T)
I_{op}/I_c	0.38 (-)
Temperature Margin (min)	1.6 (K)

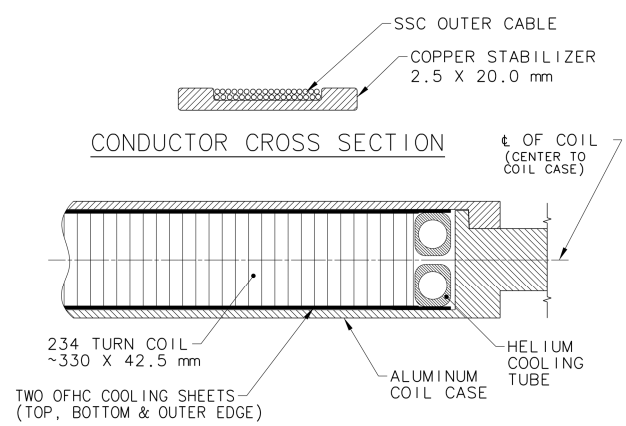

Fig. 1. Construction detail for the Torus coils showing the conductor, conduction cooling mechanism, and coil cross section.

B. Coil Pack Design

The individual coils are housed in an aluminum case that is approximately 2 x 4 x 0.05 m. Each of the coils consists of 234 turns of SSC outer cable soldered into a C-shaped copper stabilizer, total length per coil of ~2000 m, wound as a two-layer pancake, Fig. 1. The conductor is insulated with 0.08 mm fiberglass tape. Between the coil pancakes there is a 0.38 mm thick sheet of G10. The ground insulation between

Manuscript submitted October 18, 2015
Authored by Jefferson Science Associates, LLC under U.S. DOE Contract No. DE-AC05-06OR23177. The U.S. Government retains a non-exclusive, paid-up, irrevocable, world-wide license to publish or reproduce this manuscript for U.S. Government purposes.
Corresponding author: Cesar Luongo (luongo@jlab.org)
C. Luongo, J. Ballard, G. Biallas, L. Elouadrhiri, R. Fair, P. Ghoshal, D. Kashy, R. Legg, O. Pastor, R. Rajput-Ghoshal, C. Rode, M. Wiseman, and G. Young are with the Thomas Jefferson National Accelerator Facility, Newport News, VA 23606, USA
L. Elementi, S. Krave, A. Makarov, F. Nobrega, and G. Velev are with the Fermi National Accelerator Laboratory, Batavia, IL 80510 USA

Operated by Fermi Research Alliance, LLC under Contract No. De-AC02-07CH11359 with the United States Department of Energy

U.S. Government work not protected by U.S. copyright.

This is the author's version of an article that has been published in this journal. Changes were made to this version by the publisher prior to publication.
The final version of record is available at http://dx.doi.org/10.1109/TASC.2015.2510336

the conductor and copper cooling tubes or copper foil varies but has a minimum of 4 layers of 0.18 mm glass cloth. Each coil is conductively cooled by supercritical helium supplied at 4.6 K from cooling tubes located on the coil inner diameter. Two layers of 0.635 mm copper are soldered to the cooling tubes and surround the coil, providing the main path for conduction-cooling. Using conservative heat loads from the 80 K shields to the coils, and conduction through supports, the minimum estimated temperature margin is 1.6 K (with a heat load conservatively estimated as 6 W per coil.). The coil is vacuum impregnated separately and is then positioned and potted a second time in its aluminum case. Further details of the coil design are given in [4].

C. Mechanical Supports

The entire torus cold mass is supported by 3 axial supports (beam direction), 4 vertical supports, 2 lateral out-of-plane supports (OOPS), and 24 coil OOPS supports. The coil OOPS take out the sag in the coil due to gravity and react any out of plane forces due to misalignments. The OOPS design consists of a fiberglass tube epoxied to a set of bellows. The bellows maintains vacuum and allows the OOPS to move during cooldown (Fig. 2). The assembly includes a load cell connected to the DAQ so that the out of plane force seen by each coil is always known.

The axial and vertical support are stainless steel links connecting the cold mass to the vacuum jacket. The vertical supports take the entire gravity load for the 25 Ton cold mass, while the axial supports react any loads in the beam direction due to misalignments or seismic motion.

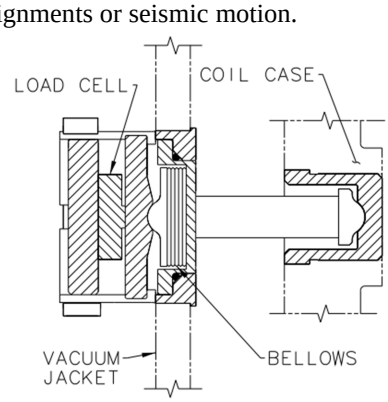

Fig. 2. Coil out-of-plane supports (OOPS)

D. Quench Protection

Various quench scenarios were analyzed and the worst case was determined to be a single coil quenching and dissipating the energy internally (self-protection). In that case the hot spot temperature is 60 K, and 75 K for the coil alone without including the thermal capacity of the aluminum case [5]. During such an event all other coils are driven normal by the current decay once the dump resistor is connected, with 50% of the energy being extracted to the resistor, and maximum terminal voltage during such a quench is < 500 V. Quench detection is by voltage taps located at either side of the splices between coils. The protection is designed for fast discharge or controlled ramp down depending on the class of fault.

E. Coil-to-Coil Splices

The coils are electrically connected via soldered joints that are conduction cooled through copper braids mounted directly onto the liquid helium re-coolers. A reliable low resistance electrical joint was designed involving the soldering of an additional rectangular-section of copper stabilizer to the conductor. The splice design tooling, and subsequent practices, aimed at preventing the $Sn_{60}Pb_{40}$ solder (which holds the SSC cable into the copper channel) from re-flowing during the splicing operation. An aluminum fixture was designed to hold the conductor and copper stabilizer during the soldering process. The actual splice between the two coils, and a section view of a test splice, are shown in Fig. 3. The resistance of the joint was measured at 4.2 K to be 1.1×10^{-9} Ω in high field, consistent with the entire joint being in the normal state [6].

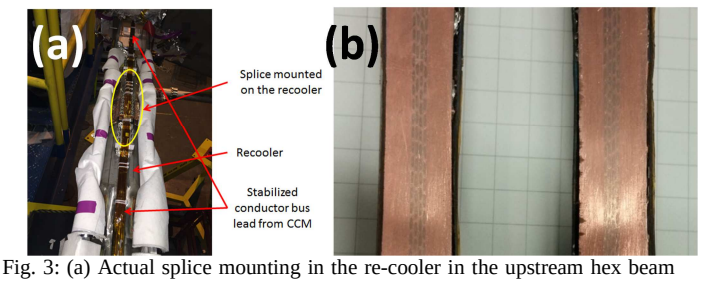

Fig. 3: (a) Actual splice mounting in the re-cooler in the upstream hex beam and (b) Splice longitudinal cut-away view (both sides of the cut) showing void free construction, including epoxy and insulation

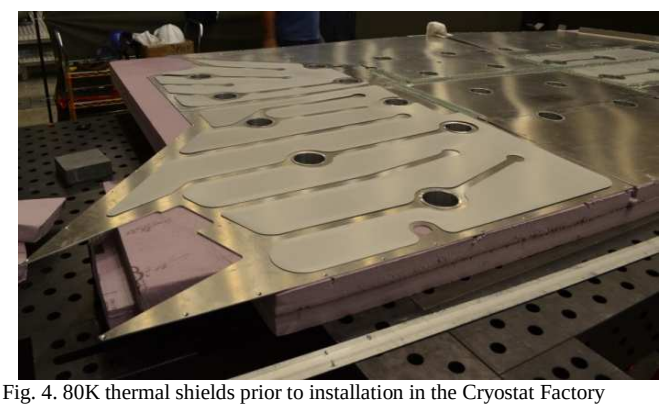

Fig. 4. 80K thermal shields prior to installation in the Cryostat Factory

F. Thermal Shields

The coil case is shielded from the vacuum jacket by a 3 mm thick 80 K thermal shield. The shield is actively cooled by liquid nitrogen circulating through tubes welded to the shield. The shield is supported off of the coil case by bumpers and thin walled support arms. The shield is constructed of Al-6061 with Al-1100 strips epoxied to the shield at maximum temperature regions in the shield (Fig. 4). The 6061 provides mechanical strength to the shield while the 1100 strips add additional cooling where needed. The shield has been segmented to reduce the effects of eddy currents due to a rapid discharge of the magnet coils [7]. The shield installation, along with MLI, is part of the activities carried out at JLab in the Cryostat Factory (see Section IV below).

U.S. Government work not protected by U.S. copyright.

This is the author's version of an article that has been published in this journal. Changes were made to this version by the publisher prior to publication.
The final version of record is available at http://dx.doi.org/10.1109/TASC.2015.2510336

III. Coil Fabrication

Because of the large size of the coils, FNAL had to develop new tooling and processes to support coil production operations. Conductor provided by JLab was initially cleaned, inspected, its length measured, and insulated before winding the coils into a double pancake configuration. Extensive QA was used to determine the integrity of the coils and additional copper stabilizer was added to the leads before an initial Vacuum Pressure Impregnation (VPI) in a sealed mold. The impregnation procedure was designed, and qualified, for proper degassing, and to prevent outgassing of the epoxy during impregnation. The temperature of the coil and of the mold was driven and maintained through resistive heating of the coil itself (power supply). Temperature uniformity was guaranteed through sensors along the mold. Copper heat shields were then soldered to the impregnated coil before moving on to a second impregnation step within the aluminum coil case. After the second impregnation, the coil case modules had their cooling tubes formed before shipment to JLab. A full description of the fabrication route is given in [8], while Fig. 5 shows the general layout for the winding process.

Fig. 5. Partial view of the coil fabrication shop at Fermilab showing a coil being wound, the second spool is seen above the winding table.

IV. Cryostat Factory

After finished coils passed their receipt inspection at JLab, they were fully instrumented with temperature sensors and strain gages in preparation for an 80 K cold test [9], which was part of the Cryostat Factory task. The aim of this test was to verify the integrity of the coil's electrical insulation at cryogenic temperatures as well as to confirm the efficacy of the CCM's conduction cooling methodology. The Factory was responsible for designing all the tooling needed to cryostat the Cold Coil Masses (CCMs). An additional constraint was the compressed assembly schedule which was mitigated by breaking up the work into three work pipelines which could be fed simultaneously, Fig. 6 shows the factory layout. Special attention was taken in scheduling the pipelines to avoid conflicts in the common material handling fixtures. The other key was pre-assembly of as many components as possible.

Consistent with the program risk mitigation approach of practicing every quality or schedule-critical procedure, the Factory practiced cryostating a full-scale empty coil case, which was later disassembled and returned to FNAL for use on a production CCM. This early practice allowed refinement of the assembly procedures and construction time estimates.

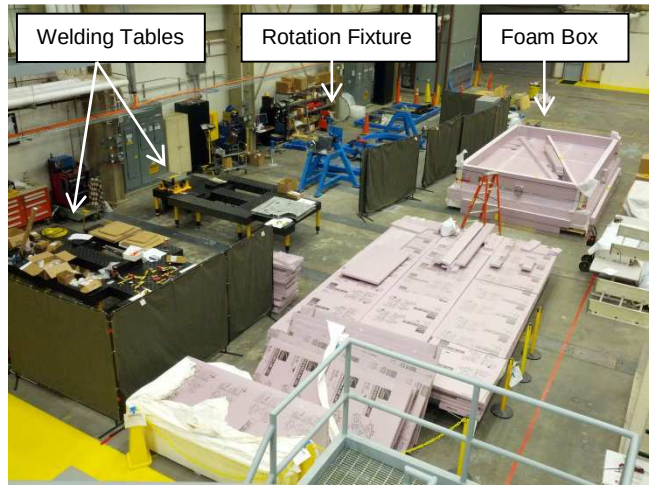

Fig. 6. View of Cryostat Factory showing assembly of 80K foam box, CCM rotation fixture, and two welding tables

V. Installation

A. Installation Approach

Installation in the hall was based on the "spit" method. Since a completed magnet cannot be brought into the hall, it has to be assembled from its smaller components (ship-in-a-bottle philosophy). Fig. 7 illustrates the approach. Individual coils are brought into the hall already cryostated, except for the opening where they attach to the hub. A coil is attached to the hub, then the hex beams are attached to the previous coil before the next coil is brought in and attached to the hex beams. The sub-assembly can be freely rotated around the hub so that critical operations, such as making splices or welding pipes in the hex beams, can always be performed in a convenient location and orientation, improving quality and safety. The process of "flying" a coil for attachment to the hub is shown in Fig. 8

B. Quality Control During Installation

Given the complexity of assembling the Torus magnet within the hall from its components, it was important to pay special attention to the in-process QA checks. Although not an all-inclusive list, the QA checks fall into three major categories: a) Electrical, b) Leak and pressure checks, and c) Survey.

Each time a coil-to-coil splice is made in the hall, a room-temperature resistance measurement is taken (for point measurement for the splice, and lead-to-lead for the entire coil). At that point, the inductance is measured by the variable frequency method, with extrapolation to the DC value. Finally, a hi-pot to ground test is done for the insulation of the splice. Likewise instrumentation checks are carried out routinely at the completion of each hex beam fitting, and each time the coils are rotated. Leak checks are carried out for each weld and braze in the hydraulic circuit, and in the case of aluminum welds or brazes, a liquid nitrogen cold shock is also introduced. Pressure tests are performed at the completion of a circuit, followed by a final leak check. Surveys for alignment are also carried out after attaching each coil to the hub, and a global survey was done at the completion of the hexagon.

U.S. Government work not protected by U.S. copyright.

This is the author's version of an article that has been published in this journal. Changes were made to this version by the publisher prior to publication.
The final version of record is available at http://dx.doi.org/10.1109/TASC.2015.2510336

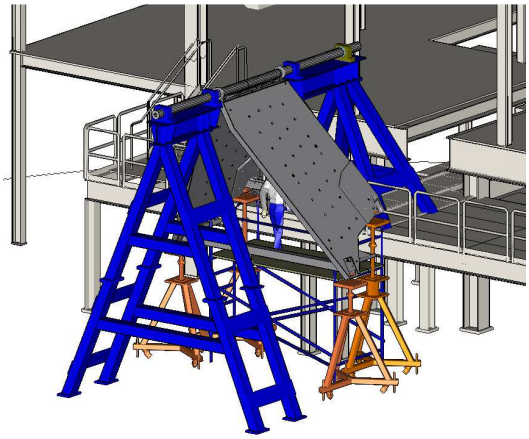

Fig. 7. Installation philosophy follows the "spit" method, coils are attached to the hub, hex beams attached to the coils, and sub-assemblies can be rotated

Fig. 8. A coil being "flown" for attachment to the hub and hex beams

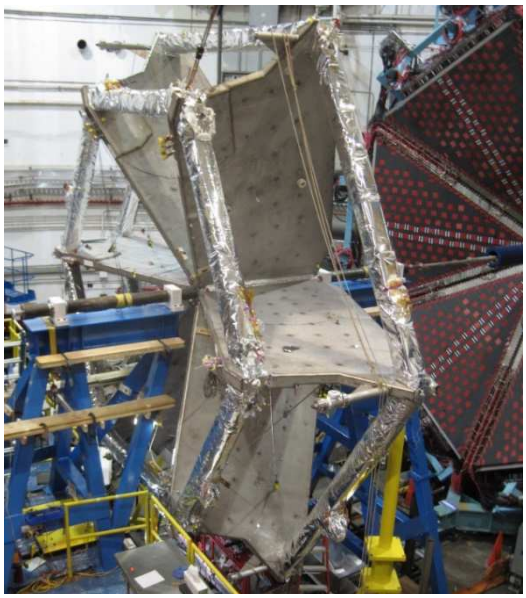

Fig. 9. All six coils and twelve hex beams installed, picture from just before vacuum jackets are closed for the hex beams. Detectors are seen on the right

C. Status and Remaining Work

As of Q3/2015, all six coils and twelve hex beams have been installed (Fig. 9). Coils are electrically connected, all in-process electrical QA steps passed, all hydraulic circuits have been completed, leak-checked and pressure tested. The vacuum jacket segments have all been tack-welded. Remaining scope to completion is to make the interface to the cryoduct (current.helium feeder), as well as complete fabrication and installation of the cryo service tower.

VI. Power Supply, Instrumentation & Controls

The Torus magnet is instrumented extensively, a total of 130 temperature readings are processed through the DAQ, while a total of 86 load cells and strain gages monitor the status of the supports and the OOPS loads.

The Torus control system has two components, the Magnet Protection System (MPS) and the PLC control system. The MPS ensures the magnet is protected under a number of fault conditions (liquid level, current lead temperature, vacuum, quench). It is hard wired, and no general purpose computers, PLCs or network devices are involved in its decision-making process. A trip of any device in the MPS loop automatically opens the dump contactor in the power supply, discharging the magnet through the dump resistor. The selection of devices to include in the MPS was driven largely by the FMEA (Section VII below). The PLC control system is based on an Allen Bradley series 1756 ControlLogix PLC. Rockwell Automation software is used to program the PLC and view the status of the running PLC program in real-time. EPICS is used as an operator interface, alarm handler and archiving system.

The power supply is a Danfysik 8500 rated at 4000 A/6 V, with integrated dump resistor (124 mΩ). The quench protection system is redundant, one being incorporated within the Danfysik power supply, hard-wired and with a trigger threshold of 100mV, the other running through the Fast DAQ to the PLC, where an independent logic can trigger the switch.

VII. Risk Mitigation Approach

The risk mitigation approach was based on an FMEA analysis carried out for each phase of the implementation: design, fabrication, installation, and commissioning [10]. Nearly 400 risk items were identified, categorized, and ranked; mitigation avenues were investigated for all, and implemented when warranted, either because the risk was deemed high, or implementation was easily achieved.

During the installation phase for instance, some of the mitigations actions stemming from the FMEA included: a) Extensive use of mock-ups and practices for all quality-critical activities (splices, etc.), b) Development of written procedures, before and in conjunction with the practices, c) Safety and risk-awareness meetings prior to each critical operation, or each time the tenor of the installation process would change, d) Extensive use of in-process QA checks, e) Detailed weekly planning of installation activities in the hall.

VIII. Commissioning Plan

The CLAS12 Torus magnet commissioning calls for a series of gateway reviews prior to system start-up. These reviews, a pressure systems safety review (code compliance), and an Experiment Readiness Review (ERR), dealing with all other safety aspects for electrical and cryogenic systems, as well as the magnet itself, are planned for early 2016. Commissioning will proceed with vacuum pumping of the vessel, pump and purge of the cryogenic system, cooldown, magnet energization, and field mapping. Each one of these phases in the commissioning will take about a month, so that magnet commissioning should be complete by summer 2016.

U.S. Government work not protected by U.S. copyright.

This is the author's version of an article that has been published in this journal. Changes were made to this version by the publisher prior to publication.
The final version of record is available at http://dx.doi.org/10.1109/TASC.2015.2510336

REFERENCES

[1] C. Rode, "Jefferson Lab 12 GeV Upgrade," *Adv. Cryo. Eng. (Proc. Of Cryogenic Engineering Conference, CEC)*, Vol. 1218, 26-33, 2010

[2] R. Fair and G. Young, "Superconducting Magnets for the 12 GeV Upgrade at Jefferson Laboratory," *IEEE Trans. Appl. Supercond.*, vol. 25, no. 3, Jun. 2015, Art. ID. 4500205

[3] P. Ghoshal, O. Pastor, D. Kashy, W. Schneider, M. Wiseman, M. Zarecky, G. Young, C. Rode, L. Elouadrhiri, and V. Burkert, "Electromagnetic and Mechanical Analysis of the Coil Structure for the CLAS12 Torus for 12 GeV Upgrade," *IEEE Trans. Appl. Supercond.*, vol. 25, no. 3, Jun. 2015, Art. ID. 4500705

[4] M. Wiseman, L. Elementi, L. Elouadhiri, G. Gabrielli, T. J. Gardner, P. K. Ghoshal, D. Kashy, O. Kiemschies, S. Krave, A. Makarov, B. Robotham, J. Szal, and G. Velev, "Design and Manufacture of the Conduction Cooled Torus Coils for The Jefferson Laboratory 12-GeV Upgrade," *IEEE Trans. Appl. Supercond.*, vol. 25, no. 3, Jun. 2015, Art. ID. 4500505

[5] V. Kashikhin, L. Elouadhiri, P. Ghoshal, D. Kashy, A. Makarov, O. Pastor, L. Quettier, G. Velev, and M. Wiseman, "Torus CLAS12-Superconducting Magnet Quench Analysis," *IEEE Trans. Appl. Supercond.*, vol. 24, no. 3, Jun. 2014, Art. ID. 4500405

[6] P. K. Ghoshal, et al., "Design and Evaluation of joint resistance in SSC Rutherford type cable splices for Torus magnet for the Jefferson Lab 12 GeV Upgrade," *IEEE Trans. on Appl. Supercond.*, submitted for publication (this volume)

[7] O. Pastor, T. Willard, P. Ghoshal, D. Kashy, M. Wiseman, V. Kashikhin, G. Young, L. Elouadrhiri, and C. Rode, "Structural Analysis of Thermal Shields During a Quench of a Torus Magnet for the 12 GeV Upgrade," *IEEE Trans. Appl. Supercond.*, vol. 25, no. 3, Jun. 2015, Art. ID. 4500404

[8] G. Velev, S. Krave, A. Makarov, F. Nobrega, O. Kiemschies, B. Robotham, L. Elouadhiri, C. Luongo, D. Kashy, and M. Wiseman, "Overview of Torus Magnet Coil Production at Fermilab for the Jefferson Lab 12-GeV Hall B upgrade," *IEEE Trans. Appl. Supercond.*, submitted for publication (this volume)

[9] R. Legg, D. Kashy, R. Fair, P. Ghoshal, R. Bachimanchi, K. Bruhwel, M. Taylor, J. Fischer, D. Machie, and J. Powers, "Liquid Nitrogen Tests of a Torus Coil for the Jefferson Lab 12-GeV Accelerator Upgrade," *IEEE Trans. Appl. Supercond.*, vol. 25, no. 3, Jun. 2015, Art. ID. 4500104

[10] P. Ghoshal, G. Biallas, R. Fair, R. Rajput-Ghoshal, W. Schneider, R. Legg, D. Kashy, J. Hogan, M. Wiseman, C. Luongo, J. Ballard, G. Young, L. Elouadrhiri, and C. Rode, "FMEA on the Superconducting Torus for the Jefferson Lab 12 GeV Accelerator Upgrade," *IEEE Trans. Appl. Supercond.*, vol. 25, no. 3, Jun. 2015, Art. ID. 4901005

U.S. Government work not protected by U.S. copyright.