# The Machine Protection System for the Fermilab Accelerator Science and Technology Facility

Jinyuan Wu, Arden Warner, Ning Liu, Richard Neswold and Linden Carmichael

*Abstract*— **The Machine Protection System (MPS) for the Fermilab Accelerator Science and Technology Facility (FAST) has been implemented and tested. The system receives signals from several subsystems and devices which conveys the relevant status needed to the safely operate the accelerator. Logic decisions are made based on these inputs and some predefined user settings which in turn controls the gate signal to the laser of the photo injector. The inputs of the system have a wide variety of signal types, encoding methods and urgencies for which the system is designed to accommodate. The MPS receives fast shutdown (FSD) signals generated by the beam loss system and inhibits the beam or reduces the beam intensity within a macro-pulse when the beam losses at several places along the accelerator beam line are higher than acceptable values. TTL or relay contact signals from the vacuum system, toroids, magnet systems etc., are chosen with polarities that ensure safe operation of the accelerator from unintended events such as cable disconnection in the harsh industrial environment of the experimental hall. A RS422 serial communication scheme is used to interface the operation permit generator module and a large number of movable devices each reporting multi-bit status. The system also supports operations at user defined lower beam levels for system commissioning. The machine protection system is implemented with two commercially available off-the-shelf VMEbus based modules with on board FPGA devices. The system is monitored and controlled via the VMEbus by a single board CPU.**

*Index Terms*— **Machine Protection System, FPGA**

## I. Introduction

The Fermilab Accelerator Science and Technology Facility (FAST) currently under construction will soon enable a broad range of beam-based experiments to study fundamental limitations to beam intensity and to develop transformative approaches to particle-beam generation, acceleration and manipulation[1][2]. FAST incorporates a superconducting radiofrequency (SRF) linac coupled to a photo injector and small-circumference storage ring capable of storing electrons or protons. The facility will establish a unique resource for R&D towards Energy Frontier facilities and a test-bed for SRF accelerators and high-brightness beam applications. FAST will provide an electron beam with up to 3000 bunches per macro-pulse, 5Hz repetition rate and 300 MeV beam energy. The completed machine will be capable of sustaining an average beam power of close to 15KW at the bunch charge of 3.2 nC. A robust Machine Protection System (MPS) capable of interrupting the beam within a macro-pulse and that interfaces well with new and existing controls system infrastructure has been developed to mitigate and analyze faults related to this relatively high damage potential [3]. This paper will describe the component layers of the MPS system, including a FPGA-based Permit Generator, a Laser Pulse Controller and related interfacing subsystems. The block diagram of the ASTA machine protection system is shown in Fig. 1.

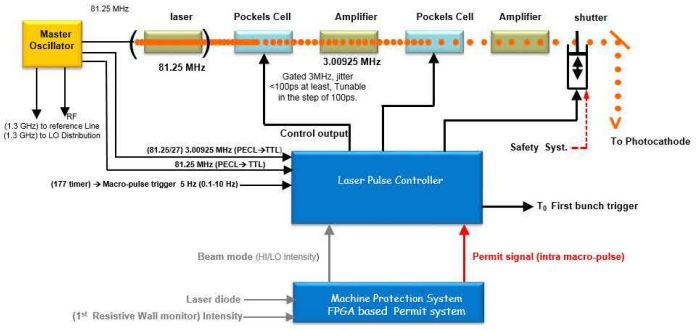


Fig 1. The Fast Machine Protection System Block diagram

The machine protection system is implemented with two CAEN V1495 modules with user programmable onboard FPGA devices. One board is designated for the Permit Generator, and the other for the Laser Pulse Controller which is the primary actuator for inhibiting the beam. The inputs to the machine protection system are broken into three categories: (1) Fast Shut Down (FSD) signals from the beam loss monitor system, (2) status signals in the form of TTL or relay contacts from the various machine subsystems, including instrumentation such as vacuum, toroid systems etc. and (3) encoded serial differential lines in RS422 standard from the movable devices. The Permit Generator module outputs 16 bits in a parallel ribbon cable to the Laser Pulse Controller module which carries an operation code (Op Code) with 8 levels. (The Op Code is sent in 16 bits cable with redundancy check). Based on the Op Code, the Laser Pulse Controller

Manuscript received November 15, 2015. This work was supported in part by Fermi Research Alliance, LLC under Contract No. DE-AC02-07CH11359 with the United States Department of Energy and University of Chicago's Fermilab Strategic Collaborative Initiative.

The authors are with Fermi National Accelerator Laboratory, Batavia, IL 60510 USA (phone: 630-840-8911; fax: 630-840-2950; e-mail: jywu168@fnal.gov).

module will provide a gate to the gun laser system via the Pockels cells with a width that corresponds to the total number of 3 MHz pulses capable without crossing the programmable threshold for losses. The detailed connection is shown in Fig. 2

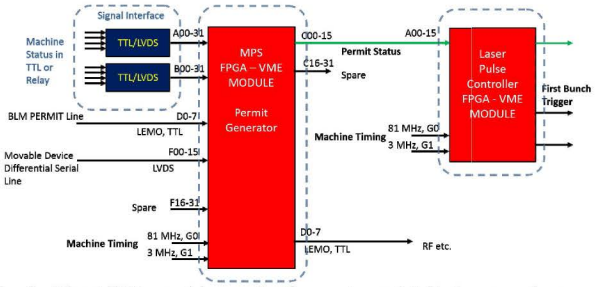


Fig. 2. The ASTA machine protection system: detailed connections

The maximum width of the gate is 1 ms which would accommodate a maximum of 3000 bunches. It is designed to inhibit the system within the 1ms macro-pulse window. The response time of the system has been demonstrated to be << 1 microsecond corresponding to less than 3 bunches in the machine. Depending on the Op Code, the Laser Pulse Controller will also output a Gun RF signal that will enable the RF system to operate to accelerate the electrons.

## II. The Permit Generator Module

The Permit Generator Module is the primary interface to the various signals that provide the overall status of the accelerator to the MPS. These inputs determine the OK/not OK status for the entire system. A CAEN V1495 module with seven I/O ports A through G is used to handle the various input types.

Ports A, B, D and F are LVDS input ports that receive signals from the various part of the accelerator control and protection system. The port C is a dedicated output port sending the Operation Code (Op Code) signals in LVDS standard to the Laser Pulse Controller Module. The port E sends out TTL signals for RF system control and for operation monitoring.

### A. *The Status Signals*

The machine status signals from the vacuum system etc. are slow TTL or relay contact signals. Inputs of Port A and B are dedicated to these signals. Four TTL to LVDS converter modules are used to interface the TTL or relay contact signals.

There are 12 LEMO type input jacks in each converter module, four of which are able to be used for either TTL level or relay contact signals. For these four inputs, two comparators are used, one for TTL level and the other for relay contacts. The remaining eight inputs contain one comparator each for TTL level. This arrangement allows the user some flexibility to group the inputs of different types without having to make jumper changes or register bit settings which reduces the possibility of making mistakes. The LVDS output from all sixteen comparator modules are sent via a 34-conductor ribbon cable to the input ports of the V1495 module.

For safe protection, we demand any TTL signal to be active high level and any relay contact signal to use close state to indicate its normal operating condition, respectively. This polarity requirement ensures positive confirmation of normal operating states for all concerned subsystems. If any connection is not well connected, due to unplugged cables or lose connectors, the corresponding signal will not be mistakenly regarded as normal.

### B. *The Fast Shutdown Signals*

The Fast Shutdown Signal (FSD) is generated by the beam loss monitor system. The system was designed to interrupt the beam with in a macro-pulse and relies heavily on the ability to detect and react to losses within a few nano-seconds. The monitors are made from plastic scintillator material and are coupled to photomultiplier tubes (PMTs). The front-end processing electronics for the system consists of several ADC modules that digitizes the PMTs. The FPGA in the ADC module performs various digital operations, such as integration and threshold checking on the ADC raw data. If the beam losses from all or some detectors exceeds a predefined level, the ADC module will send a FSD command to the machine protection system.

The FSD signal output is currently encoded as a 30 MHz pulse train if the beam loss is within an acceptable level. This pulse train turns off if the beam loss is too large. Possibilities of encoding other beam loss conditions are reserved for future evolution of the machine protection system. The encoding scheme demands the beam loss systems to positively confirm continuously that the beam loss is within the accepted level for normal operation, which provide automatic safe protection. The FSD signals are sent through a TTL to LVDS converter and fed into the Permit Generator module via port D. Inside the Permit Generator, a functional block demands a correct 30 MHz pulse train for normal operation. If the input becomes steady, either due to large beam loss or due to a broken cable or oxidation of connector contacts, the Permit Generator will shut down the beam.

### C. *The Serial Links from Movable Devices*

Several movable devices are used to insert components into the beam line. Each movable device is able to bring up to four components into the beam and reports the status of 4 bits to the controller; each controller handles 6 movable devices.

It is not practical to send each bit via a dedicated wire to machine protection system since that will use too many input channels in the V1495 module. On the other hand, the motion of these movable device is not too fast. So it is possible to use an encoded serial link to pass the status to the machine protection system.

The movable device controller sends the status via a differential signal pair using the RS422 standard to the Permit Generator. Up to 16 differential pairs are reserved which allows a total of 96 movable devices in the system. Each device has a payload of 4 bits, but we encoded them to an 8-bit value ranging from 0x40 to 0x4F. This will allow extra cross checking in the receiver side and can be visualized in regular computer terminal by displaying printable ASCII

characters ('@', 'A', 'B', etc.). The machine protection logic for the movable devices again follows the "positive confirmation rule" for safe protection. The status of all movable devices are passed to the Permit Generator in less than 0.1 sec and the process continues for the entire operating duration.

### D. *The Operation Code Logic*

The accelerator is typically operated with large variations in beam intensity and beam parameters depending on the intended beam destination or experiment being commissioned. For this reason beam modes are designed to adjust the strictness of the active machine protection to the desired level of beam intensity allowed for various configurations of the accelerator. It is also often necessary to operate the machine in modes that require no beam, limited beam or with special condition required for laser alignment with no RF etc. Operation Codes are designed into the system to fulfill these requirements. At this time, up to 8 Op codes are used in the system with code 7 being the normal operation and code 0 being the beam shutdown condition. The other codes, 1 to 6 are intended to run the beam in the intermediate levels depending on the status of the movable devices.

Each movable device may be in up to 4 positions and the users may specify the Op Code for each position and the specifications are stored in the FPGA memory. The Permit Generator Module internal logic checks all movable device status and corresponding Op Code. The lowest Op Code is chosen and kept until the module is reset. This logic is also true for the beam shutdown condition since the shutdown condition is the lowest Op Code, code 0. In any moment, if for any reason such as excess beam loss the beam is to be shutdown, the beam will be kept shutdown until the module is reset after necessary adjustments on the accelerator are made.

## III. THE LASER PULSE CONTROLLER MODULE

The Laser Pulse Controller (LPC) uses the second CAEN V1495 module with control firmware implemented in the user programmable onboard FPGA devices.

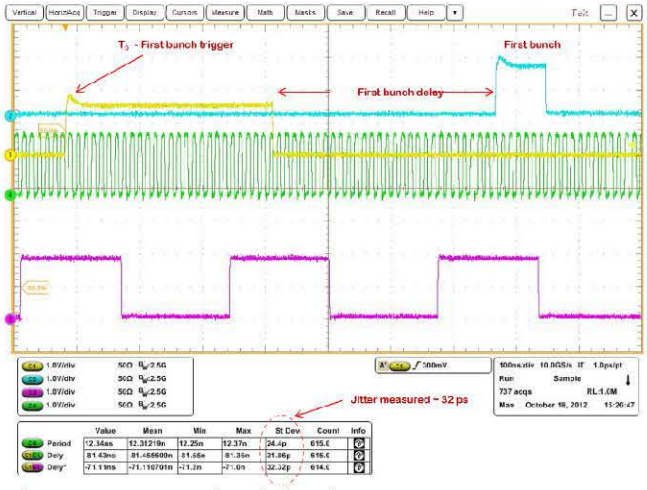


Fig. 3a LPC operational signals

It is designed to be the primary actuator for beam inhibits. Its main function is to provide a gate to the gun laser system via the Pockels cells with a width that corresponds to the total number of 3 MHz pulses capable without crossing the programmable threshold for losses. The maximum width of the gate is 1 ms which would accommodate a maximum of 3000 bunches. It is designed to inhibit the system within the 1ms macro-pulse window. The Permit Generator module outputs 16 bits in a parallel ribbon cable to the Laser Pulse Controller module, carrying an operation code (Op Code) with 8 levels. (The Op Code is sent in 16 bits cable with redundancy check). Based on the Op Code, the LPC module will output the Laser Gate signal. Fig 3a, shows the signal details. The first bunch trigger indicated in the figure is used in other subsystems in the accelerator for the initiation of various processes. The relative delay and the pulse width of the signal can be adjusted by setting corresponding registers. The repetition rate of the macro-pulse is currently 1 Hz at the early commissioning stage and will be increased to 5 Hz for the final system.

The numbers of bunches for all levels can be individually defined by the users and these numbers are stored in registers inside the FPGA. (The Op Code 0 will always output 0 bunches.)

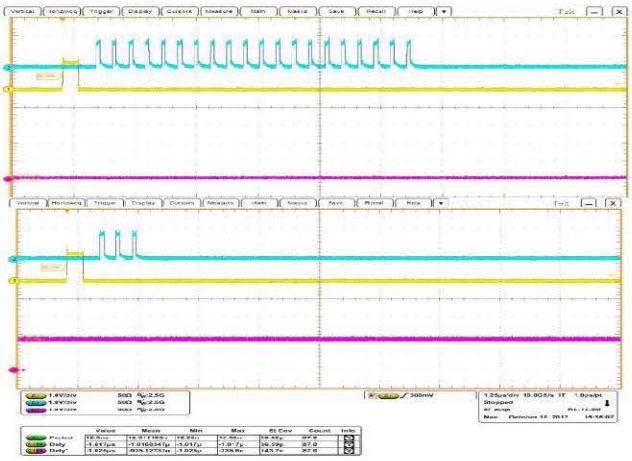

Fig 3b. Operational laser gate signals

Based on the Op Code, the Laser Pulse Controller will also output a Gun RF signal that will enable the RF system to operate to accelerate the electrons. Typical operation with most Op Codes has RF enabled to accelerate electrons while in some codes for alignment, the RF is disabled with only laser light present. The outputs of the Laser Gate signal for normal operation with 20 bunches along with the macro-pulse starting signal are shown in the top picture of Fig. 3b, the bottom picture shows the default FSD condition with 3 bunches

The laser gate signal is used to enable the laser system to generate laser pulses that will create electrons from the target and the electrons will be accelerated by the RF cavities to produce electron beam. The beam intensity is proportional to the number of bunches per macro-pulse. At the early

commissioning stage, a few to several hundred bunches are used [4]. In the final system, up to 3000 bunches per macro-pulse will be used.

## IV. Control Interface

The control registers for the FSD signals, status signals and movable devices are accessible via graphical user interfaces (GUI) that allow the users to easily monitor the status of these signals and include or exclude them from the final logic. The screen shot for the FSD and status signals is shown in Fig. 4.

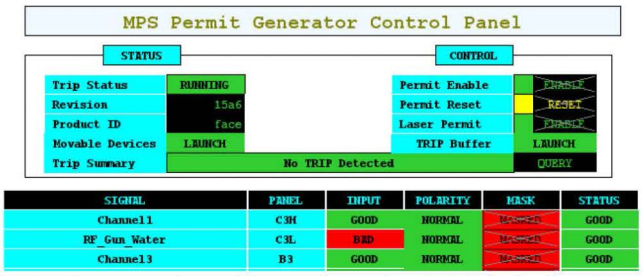


Fig. 4. The screen shots of the monitor and control GUI for the FSD and status signals.

The demands of flexibilities during the commissioning requires the ability to mask out any input since many inputs are not implemented at the early commissioning stage. Since some inputs may be used either for TTL input or relay contact, it is necessary for the user to control the polarity before these inputs are used in the decision logic. The polarity and mask registers are implemented for all inputs. The product ID and revision registers are read and displayed for positive confirmation and safe operation. A master enable bit, called beam budget permit bit is also implemented that allows master control of the beam permit for the facility from the Fermilab Main Control Room. This allows for administrative control and monitoring within radiation safety limits.

The screen shot of the GUI for the movable devices is shown in Fig. 5.

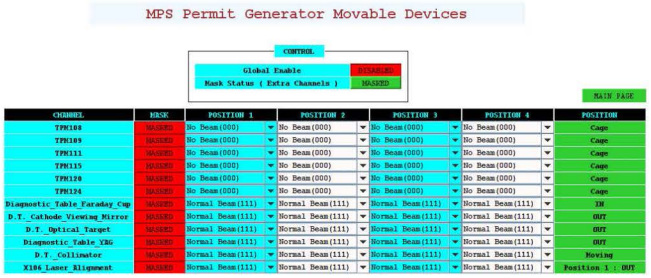


Fig. 5. The screen shots of the monitor and control GUI for the movable devices.

For each movable device, the Op Code for each position must be pre-defined by the users. There are up to 96 devices in the system but many of them will not be implemented in the early stage of the commissioning. The GUI allows the user to change, view and masks these settings by setting the corresponding bit in the device register.

## V. Summary

The main components for the FAST Machine Protection System have been successfully commissioned. Commissioning began with successfully delivering 20 MeV beam to the low energy 50MeV dump for this first stage. The system offers enough flexibility to accommodate several input types and has the capability to be expanded to accommodate future accelerator development. The architecture of the system is designed around the commercially available CAEN V1495 FPGA boards which has proven to be operationally robust. All the fundamental components to the system has been exercised and meet the requirements for the system. The expansion of the system to meet the final goals of the facility is now ongoing but we think present system will be adequate for the facility described.

## References


[1] M. Church, J. Leibfritz & S. Nagaitsev, "and Plans for an SRF Accelerator Test Facility at Fermilab," in *SRF 2011,* August 2011 available via: { http://www.JACoW.org }.

[2] M. Church, "Proposal for Experiments and Upgrades at the A0 Photo-injector," in Fermilab Beams-doc-3248-v1 Nov. 2008.

[3] A. Warner and Linden Carmichael, "Development of a Machine Protection System for the Superconducting Beam Test Facility at Fermilab", ICALEPCS'11, France, October 2011,WEPMU013; ; http://www.JACoW.org.

[4] D.J. Crawford, et. al., "First Beam and High-Gradient Cryomodule Commissioning Results of The Advanced Superconducting Test Accelerator at Fermilab,"IPAC2015, TUPJE080