DESIGN OF A COMPACT FATIGUE TESTER FOR TESTING IRRADIATED MATERIALS*

B. Hartsell†, M. Campbell, P. Hurh, FNAL, Batavia, IL 60510, USA
T. Ishida, T. Nakadaira, KEK, 1-1 Oho, Tsukuba 305-0801, Japan
M. Fitton, RAL, Didcot, UK

Abstract

A compact fatigue testing machine that can be easily inserted into a hot cell for characterization of irradiated materials is beneficial to help determine relative fatigue performance differences between new and irradiated material. Hot cell use has been carefully considered by limiting the size and weight of the machine, simplifying sample loading and test setup for operation via master-slave manipulator, and utilizing an efficient design to minimize maintenance. Funded from a US-Japan collaborative effort, the machine has been specifically designed to help characterize titanium material specimens. These specimens are flat cantilevered beams for initial studies, possibly utilizing samples irradiated at other sources of beam. The option to test spherically shaped samples cut from the T2K vacuum window is also available. The machine is able to test a sample to 10^7 cycles in under a week, with options to count cycles and sense material failure. The design of this machine will be presented along with current status.

JUSTIFICATION

Currently there is a lack of data concerning fatigue life for irradiated Titanium 6Al-4V, both standard (grade 5) and extra low interstitial (ELI, grade 23). This is of particular concern since a vacuum window with 6Al-4V titanium components directly interacting with the beam is currently installed in the T2K beam line, shown in Figure 1. When the current vacuum window is decommissioned and a new window is installed, it is possible that samples could be cut from the irradiated material. In addition, pre-machined flat samples are planned to be irradiated at other sources of particle beam. These samples can then be used in various tests to characterize irradiated 6Al-4V Ti. In order to estimate effects of irradiation on fatigue, a fatigue testing machine must be constructed that can fit within an existing hot cell design to provide radiation shielding. The results from these fatigue tests can then be compared to control samples run on the same machine prior to irradiation. Samples are expected to be run out to at least 10 million (10^7) cycles to approximate the number of beam pulses on a production window.

SYSTEM DESIGN

The fatigue testing machine used to test the samples must fit inside a hot cell due to sample radioactivity, with a maximum pass-through cross section of a square measuring 9 inches per side. The master-slave manipulators also impose restrictions on material handling, weight capacity, and machine operation. The machine must be able to withstand multiple fatigue runs of 10 million cycles or more with minimal maintenance.

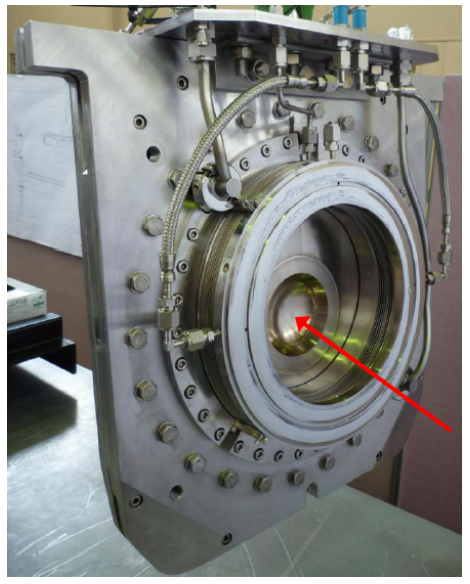

Figure 1: T2K vacuum window assembly, with a red arrow highlighting the approximately 15 cm diameter Ti window.

Sample Design

Two different fatigue samples were designed to accommodate two different test setups. First, a flat fatigue sample was designed in order to simplify the commissioning process of the fatigue testing machine as well as provide the ability to test samples irradiated at other particle beam facilities. Second, a sample with a spherical profile was designed to approximate samples cut from the T2K vacuum window.

Flat fatigue samples are designed as cantilever beams similar to the ASTM D671 standard. While the standard is meant for evaluating flexural fatigue of plastics, the geometry works well for all materials. Flat sample geometry can be seen in Figure 2. It features a wide area for clamping of the material, a transition to a narrower section through a curved profile, and a narrow gauge length. This geometry ensures that the maximum stress occurs away from the clamp and in the region transitioning to the thin gauge length. The effective testing length of the sample, which is the distance from the edge of the clamp to the point where the sample is

* Work supported by Fermi Research Alliance, LLC under Contract No. DE-AC02-07CH11359 with the United States Department of Energy.
† hartsell@fnal.gov

actuated, is tightly controlled in order to provide a known stress in the sample.

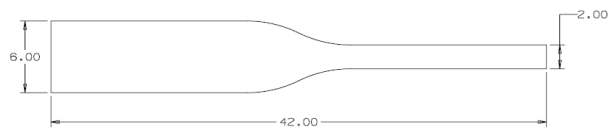

Figure 2: Geometry of the flat fatigue sample, dimensions in mm.

To determine appropriate dimensions of machine components, the deflection of the sample to achieve the desired stress must be calculated. Due to the varying cross section of the beam, these calculations were carried out in ANSYS, with a sample output shown in Figure 3. These values were then fed into hand calculations to determine various machine dimensions.

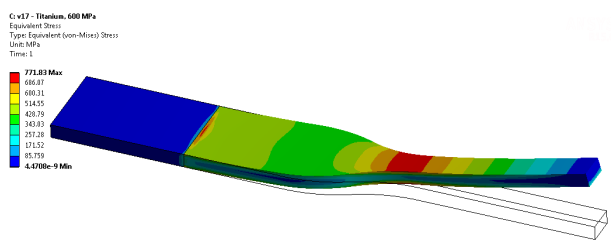

Figure 3: Von-Mises stress results from ANSYS for a flat fatigue sample.

Samples using this flat geometry have been fabricated in Japan to the same tolerance and surface finish specifications as the T2K vacuum window. For commissioning runs, samples have been simply wire EDM (electrical discharge machining) cut from 6Al-4V Ti sheet stock as a cost-effective method to ensure the testing machine is working as intended.

The T2K vacuum window has a spherical shape. Samples produced from the window will share this geometry and it will be similar to that shown in Figure 4. However, this geometry complicates the machine design and will be difficult to machine from an irradiated window.

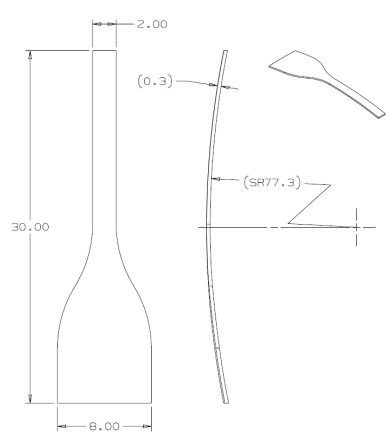

Figure 4: Spherical sample geometry, dimensions in mm.

Fatigue Testing Machine Design

The fatigue testing machine is designed as simply as possible to avoid maintaining complex machinery inside of a hot cell. The system, shown in Figure 5, is based off a 1/4 horsepower AC motor operating at 1500 rpm. At this speed, 10^7 cycles can be achieved after about 4.6 days of operation. The motor is attached to a exchangeable cam, which pivots an arm that actuates the sample. Cams can be machined to provide various combinations of maximum stress, alternating stress, and corresponding R-ratio (the ratio of minimum to maximum stress) by varying the cam lift and diameter. During the initial phase, testing is only done at an R-ratio of zero since this is expected to most closely approximate incoming beam events.

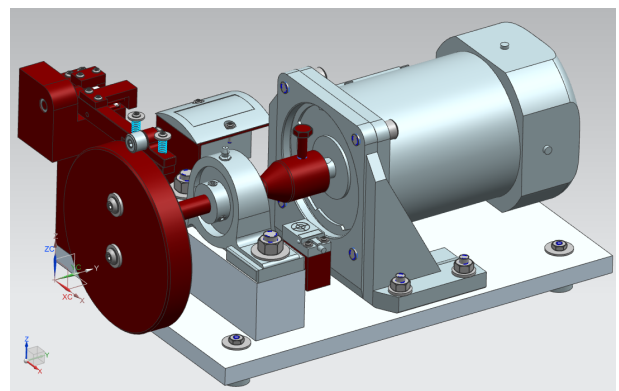

Figure 5: Isometric view of the fatigue testing machine design.

The R-ratio of a fatigue test can be changed by two methods. First, the sample holder can be moved up or down by shimming the sample holder shown in Figure 7. Using this method, the mean stress is increased while the alternating stress stays constant. A plot of stress during rotation of the cam shaft for various R-ratios is shown in Figure 6. Another method is to simply design a new cam with the appropriate lift and diameter to achieve any mean stress, alternating stress, and corresponding R-ratio needed.

The fatigue sample is held in a precisely located sample holder and clamped in place, shown in Figure 7. It is actuated by a dowel pin located in the pivoting arm. The lower pin actuates the sample upward as the cam lifts, and the upper pin provides retraction as the cam returns to the neutral location for testing using positive values of R. For negative values of R, the upper pin provides actuation force as well. The wide end of the sample is clamped into place with a two-piece clamp and sample holder with tapered edges to guide the sample into place.

At 1500 rpm, significant forces are present to lift the follower off the cam. The spring retention system shown in the left hand side of Figure 5 provides a clamp on the cam to ensure the following roller is always making contact with the cam.

The number of cycles the sample has actuated is counted by a proximity sensor attached to an electronic counter. A

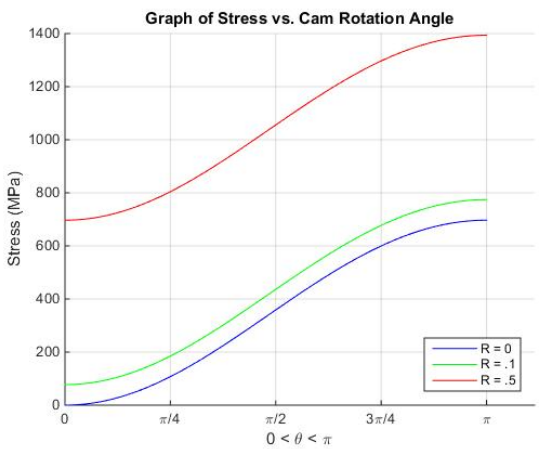

Figure 6: Stress as a function of cam angle for various R-ratios when only varying sample height.

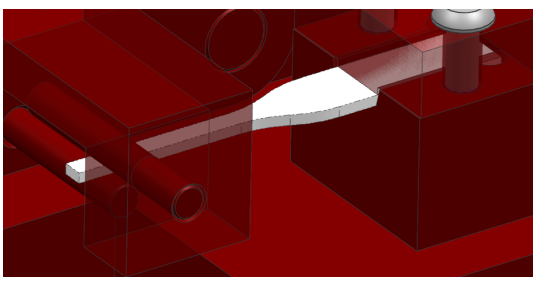

Figure 7: Zoom of sample loaded into the machine with some components shown transparent for clarity.

simple readout and reset button are on the front face of the counter. The proximity sensor is activated by the head of the bolt which holds the shaft to the motor.

When running the machine for the first time during the commissioning phase, a strain gauge will be fixed to the maximum stress location on the sample. This will help determine if the correct maximum stress is induced in the sample.

Current Status

The design of the machine has been finalized and parts have arrived from the machine shops. Flat fatigue samples have been fabricated in Japan and delivered to Fermilab for use in the machine. The machine is partially built, as shown in Figure 8. Work continues to commission the machine so testing can start on the flat fatigue samples.

FUTURE WORK AND MODIFICATIONS

Once the fatigue testing machine is running smoothly, full fatigue runs will be carried out with polished, unirradiated samples fabricated in Japan. Ultimately, irradiated samples will be tested on the machine inside a hot cell and compared to results from the unirradiated samples. Results from these studies will be the subject of further publications.

The current version of the machine was designed with hot cell adaptability in mind, but has many opportunities

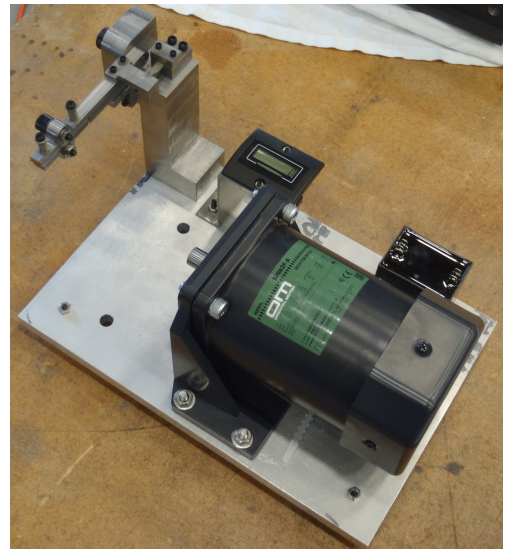

Figure 8: Current status of the machine assembly.

for improvement when it is needed in a hot cell to handle irradiated material:

1. Remove screws holding down the sample and replace with a clamping setup for simpler sample loading and unloading. The alignment of the clamp must be considered since this sets the active length of the sample for testing.

2. Rework the cam retention mechanism so the cam does not need to be held in place while screws are inserted. A dowel pin and screw setup is envisioned.

3. Break up the machine into two or more separate pieces in order to accommodate possible weight limits of the master-slave manipulators. Careful consideration must be given to the proper alignment of parts when reassembled inside the hot cell.

4. Give the upper actuation pin holder a locating feature and ensure master-slave manipulator compatibility by eliminating the need to hold the part in place while screws are inserted. This will simplify sample loading and unloading.

Another beneficial feature is the ability to stop the machine if the sample breaks. This can be done through many methods. The simplest of these methods is to construct an electrical circuit through the sample. When the circuit breaks, the machine shuts off.

ACKNOWLEDGMENTS

Much of the original design and analysis for the fatigue testing machine and samples were done by Jared Gaynier. Matt Sawtell was the designer/drafter for the machine and sample geometries. Matt Roberts has been instrumental in the design, build, and commissioning of the machine.