FERMILAB-CONF-15-135-AD-APC

PLANS FOR DEPLOYMENT OF HOLLOW ELECTRON LENSES AT THE LHC FOR ENHANCED BEAM COLLIMATION*

S. Redaelli, A. Bertarelli, R. Bruce, D. Perini, A. Rossi, B. Salvachua, CERN, Geneva, Switzerland
G. Stancari, A. Valishev, FNAL, Batavia, IL, USA

Abstract

Hollow electron lenses are considered as a possible means to improve the LHC beam collimation system, providing active control of halo diffusion rates and suppressing the population of transverse halos. After a very successful experience at the Tevatron, a conceptual design of a hollow e-lens optimized for the LHC was produced. Recent further studies have led to a mature preliminary technical design. In this paper, possible scenarios for the deployment of this technology at the LHC are elaborated in the context of the scheduled LHC long shutdowns until the full implementation of the HL-LHC upgrade in 2023. Possible setups of electron beam test stands at CERN and synergies with other relevant electron beam programmes are also discussed.

INTRODUCTION

The Large Hadron Collider (LHC) [1] at the European Organization for Nuclear Research (CERN) is designed to collide 7 TeV proton beams each of an unprecedented stored energy of 362 MJ. Its High-Luminosity (HL-LHC) upgrade project [2] aims at doubling the beam current while reducing by more than 30 % the beam emittance. Proton and ion beam halo cleaning in a superconducting accelerator poses obvious concerns. Even if the LHC Run I operation in 2010-2013 was successful, as stored energies up to 150 MJ were handled without accidental quenches [3,4], uncertainties apply to the extrapolations to higher energies. Various means to improve the LHC collimation performance are therefore under investigation.

Hollow electron beams can boost the performance of a collimation system through an active control of halo particles' diffusion speed and tail population. A low-energy, hollow electron beam that runs co-axially to the circulating hadron beam, over a few meters, can act on the halo particles at transverse amplitudes below that of the primary collimators, as shown in Fig. 1, without perturbing the beam core. The present multi-stage collimation system must remain in place to safely dispose of the halo particles that are resonantly driven unstable by the electron beam, possibly modulated in intensity, at smooth and tunable loss rates.

The cleaning performance of the LHC betatron collimation system has been the subject of a recent project review [5]. The Run I experience was acknowledged as very promising in view of operations at higher energy. The control of beam losses was recognized as a critical concern for future LHC upgrades. In this paper, the motivation for studying hollow e-lenses for the LHC are reviewed and the status of the present lens design for the LHC, derived from the conceptual design report in [6], is presented. In the conclusions, different plans for the possible timeline for deployment into the LHC are discussed.

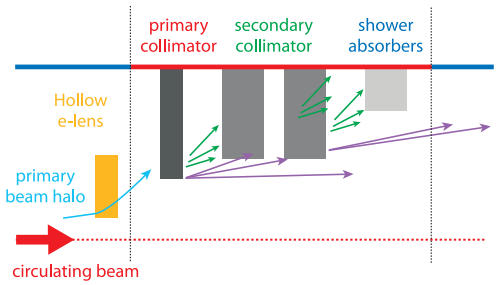

Figure 1: Scheme illustrating the conceptual integration of a hollow elens in the present collimation system hierarchy.

MOTIVATION

In 2012, the primary collimator gaps of the betatron cleaning system were as small as 2.1 mm, i.e. 4.3 betatron σ for an emittance of 3.5 μm. These settings in mm intentionally equaled the nominal settings at 7 TeV: experience could be gained operating the LHC with the tightest betatron cut. Figure 2 [7] shows the distributions of minimum lifetime recorded in high intensity fills in 2012 and compares it with what was recorded in 2011, when collimators were set at larger gaps of 5.7 σ. One can see that the beam lifetime was significantly reduced, with minimum lifetime values regularly dropping well below 1 h, whereas very few cases with lifetimes below 4 h were observed in 2011. Although extrapolations are not straightforward as the geometrical emittance will be smaller at 7 TeV, we consider the 2012 experience more representative, as also stressed in [5]. Note that beam tails at the LHC are over populated compared to nominal Gaussian distributions as they fill the entire primary collimator gaps [8]. Particularly critical are the squeeze, when the closed orbit varies in the time scale of seconds, and the preparation of squeezed beams for collisions ("adjust" mode) [7].

As an example, at 4 TeV a lifetime of 0.2 h led to peak loss rates up to 200 kW. The collimation system limit before risking plastic deformation of the jaw is 500 kW. For the 7 TeV HL-LHC, losses could reach 1 MW if similar lifetime drops were observed. So, even if upgraded cleaning performance [9] were sufficient to avoid quenches in regular operation, beam losses should be kept under control in order to avoid potential damage to the collimators.

* Research supported by FP7 HiLumi LHC, Grant Agreement 284404 and by the US DOE through the US-LARP program. Fermilab is operated by Fermi Research Alliance, LLC under Contract DE-AC02-07CH11359 with the US DOE.

Copyright © 2015 CC-BY-3.0 and by the respective authors

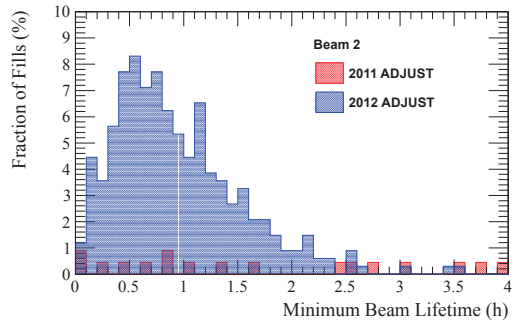

Figure 2: Minimum Beam 2 lifetime in 2011 (red) and 2012 (blue) in "adjust" mode when beams are put in collision.

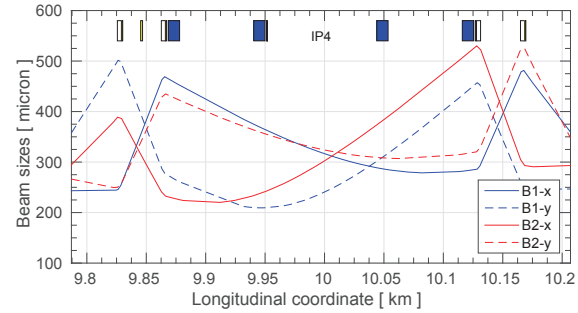

Figure 3: Horizontal (solid lines) and vertical (dashed) beam sizes around IP4 for Beam 1 (blue) and Beam 2 (red).

Active control of beam halos could be a mean to mitigate effects from loss spikes at the LHC. The beam tests at the Tevatron [10] indicate that hollow e-lenses are fully compatible with the operation of a collider (halo depletion works without deterioration of the luminosity) and can tune loss rates in a smooth and controllable way. Depleting tails resulted in reduced sensitivity to loss spikes in presence of orbit jitters. LHC would also profit from this. Also note that creating a transverse region with depleted tails is deemed mandatory for operation of the HL-LHC with crab cavities to mitigate losses in case of fast failures [11, 12].

It is important to note that hollow e-lenses can be deployed at the LHC after 2018 at the earliest. Alternative methods for halo excitation are thus also being investigated with high priority. In particular, controlled tune ripples [13] and narrow-band excitation of the transverse damper are being studied, with dedicated beam tests planned in 2015.

HOLLOW E-LENS FOR THE LHC

Considerations on Tunnel Layouts

The optimal locations identified for the hollow electron lens are situated around the radio-frequency insertion region (IR4) where, in addition to the available longitudinal space and the larger inter-beam distance of 420 mm, there would be the necessary cryogenic infrastructure. Beam optics is also favorable since for both beams, presently free slots can be found where the beams are almost round and of adequate transverse sizes. Beam sizes for both beams, as calculated for the 2015 LHC optics at 7 TeV for the a normalized emittance of 3.5 μm, are shown in Fig. 3. Optimum locations can be found for both beams in the 80 m long drift on the right side of IP4. The HL-LHC optics are different and the locations of nearly round beams can shift by up to 50 m. This can be solved with appropriate optics matching, but would only represent an issue if e-lenses were installed before the implementation of HL-LHC.

The present 3D design of the LHC hollow e-lenses is shown in Fig. 4. This 'S' shape design is proposed rather than the Tevatron 'U' shape to compensate for the asymmetric field distribution seen by the beam core at lens entrance and exit, which affects the beam emittance in case of pulsed e-beams [14]. The main parameters specified in [6] are listed in Table 1 with new hardware parameters defined from our first preliminary technical design.

Table 1: LHC Hollow Electron Lens Parameters

Parameter	Value or range
Geometry	
Length of the interaction region, L [m]	3
Desired transverse scraping range [σ]	4–8
Inner/Outer cryostat diameter [mm]	132 / ≈ 500
Inner vacuum chamber diameter [mm]	100 (80)
Magnetic fields and magnet parameters	
Gun and collector solenoid, B_g [T]	0.2–0.4
Main solenoid (superconducting), B_m [T]	2–6
Compression factor, $\sqrt{B_m/B_g}$	2.2–5.5
Maximum current in main solenoid [A]	250–300
Electron gun	
Inner/outer cathode radius [mm]	6.75/12.7
Peak yield at 10 kV, I [A]	5
Cryogenic requirements	
Static heat load [W]	≤5
Dynamic heat load from electric powering [W]	≤0.5
Dynamic heat load from beam effects	negligible
High-voltage modulator	
Cathode-anode voltage [kV]	10
Rise time (10%–90%) [ns]	200
Repetition rate [kHz]	35

Electron Beam Generation and Powering

A prototype electron gun for the LHC was built at FNAL for tests at their electron lens test stand. The tungsten dispenser cathode with BaO:CaO:Al2O3 impregnant has an annular shape and a convex surface to increase perveance. A filament heater was used to reach the operating temperature of 1400 K. The current-density distribution was measured as a function of voltage and of axial magnetic field [15, 16]. This gun could yield more than 5 A of peak current at a cathode-anode voltage of 10 kV. A length of 3 m is required in order to efficiently scrape tails at the LHC.

The FNAL design has been reviewed and adapted to the LHC standards, as shown in Fig. 5. It is planned to build this gun at CERN, in a first attempt to reproduce the 5 A current. Future design improvements will address the possibility to push further the peak current, for a potential reduction of the lens length. The CERN gun might be tested at the FNAL

Copyright © 2015 CC-BY-3.0 and by the respective authors

ISBN 978-3-95450-168-7

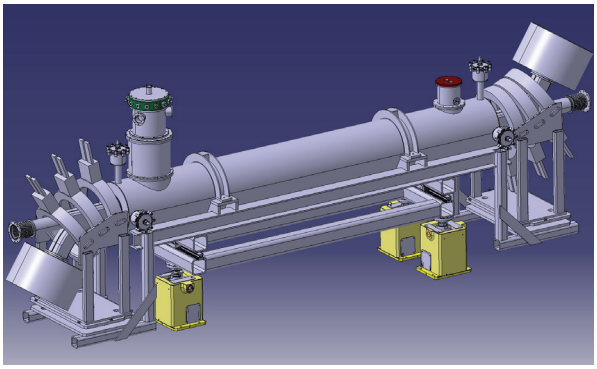

Figure 4: 3D view of the LHC hollow elens.

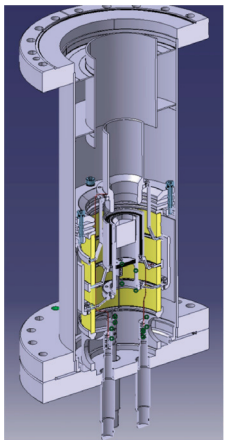

Figure 5: Present design of the electron gun cathode.

facility for a direct comparison to the previous results or directly at a test stand being setup at CERN. The high-voltage modulator developed at FNAL provides a 200 ns rise time that is sufficient for batch-by-batch excitation at the LHC and is considered as baseline.

Main Solenoids, Cryostat and Vacuum Layout

The parameters of the main superconductive solenoid, shown in Fig. 6, are listed in Table 1. The magnet current is up to 250 A and provides 5 T magnetic flux density. For manufacturing reasons, the solenoid is divided in 3 coils of 1 m (Fig. 6). Both main and correction coils are contained inside a vessel, and cooled with liquid helium to 4.2 K. The vessel is supported by permaglass bars in vertical and horizontal directions, and a longitudinal fix point is in the centre. A thermal screen working at 80 K will considerably reduce thermal losses, bringing them below 5 W.

At this stage, only some basic parameters can be defined for the solenoid. The total current of all coils does not exceed 300 A. Therefore the heat load caused by the current leads will be negligible for helium consumption. Commercially available power supplies should be sufficient to meet the magnetic field homogeneity. As quench protection system we plan to have two layers of insulated copper wound on top of each coil as pick-up coils. The quench protection will switch off the power supply upon comparison of the differential voltage between the coil and the pick-up coil.

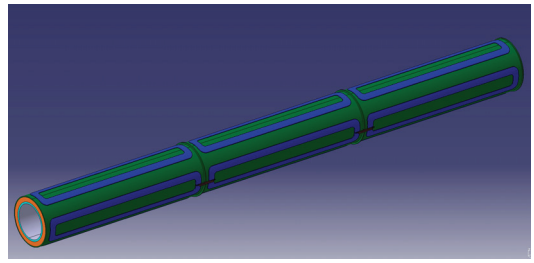

Figure 6: The main solenoid in three parts and the correction coils to tune the position of the electron beam (blue).

The beam vacuum chamber, with a diameter of 80–100 mm, will remain at room temperature and be inserted in the 132 mm aperture of the solenoid cryostat, leaving enough space for baking elements. Detailed design will take into account constraints from impedance and integration of diagnostics. Two "Y" shaped transitions, mechanically connected to the central beam pipe, are needed for e-beam injection and extraction. The chamber will be made of austenitic stainless steel (AISI 316 LN).

Beam Instrumentation

The Tevatron experience suggests that the need for instrumentation cannot be underestimated. Main requirements are: (1) accurate beam position monitoring, ideally around 20 μm or less than 0.1 σ; (2) the required accuracy should be achieved for signals of durations of about 1 ns (protons) as well as of about 100 ns (electrons); (3) monitoring of instantaneous and total electron current at cathode and collector (sensitivity 1 mA up to 10 A); (4) measurement of the electron beam profile. Dedicated designs of instruments for the LHC e-lenses have not yet started.

CONCLUSION AND STRATEGY

Loss spikes at the LHC affected already the operation at 4 TeV and are a source of concern for the performance at higher energy, in particular at the upgraded beam current planned by the HL-LHC upgrade. The strategy to address performance limitations from collimation losses at the LHC is to prepare the path for an implementation of hollow e-lenses to actively control beam halos. Building on the experience from the Tevatron, both on beam tests and on hardware, we are confident that our first conceptual design can evolve into a technical design for implementation starting in 2018. Status of this design was presented. A detailed timeline for this implementation in the LHC can only be established after having accumulated some operational experience at higher beam energies during Run II.

Depending on the findings, different strategies can be elaborated. If the deployment can wait until LS3, one could envisage a prototype installation on one beam only during LS2, which seems feasible though challenging. In parallel, other alternative methods are being studied in beam tests in 2015 in case immediate limitations are revealed by the operation at 6.5 TeV.

Copyright © 2015 CC-BY-3.0 and by the respective authors

REFERENCES

[1] O. Brüning *et al.*, "LHC design report," CERN, Geneva, Switzerland, Rep. CERN-2004-003-V1, 2004.

[2] `http://hilumilhc.web.cern.ch`

[3] M. Lamont, "Status of the LHC," J. Phys. Conf. Ser. **455** (2013) 012001.

[4] B. Salvachua *et al.*, "Cleaning Performance of the LHC Collimation System up to 4 TeV," in *Proc. IPAC'13*, Shanghai, China, May 2013, paper MOPWO048, p. 1002.

[5] `http://indico.cern.ch/event/251588`

[6] G. Stancari (FNAL) *et al.*, "Conceptual design of hollow electron lenses for beam halo control in the Large Hadron Collider," CERN, Geneva, Switzerland, ATS Report CERN-ACC-2014-0248, 2014; also available from FERMILAB, Batavia, IL, USA, as Rep. FERMILAB-TM-2572-APC, 2014.

[7] B. Salvachua *et al.*, "Lifetime Analysis at High Intensity Colliders Applied to the LHC," in *Proc. IPAC'13*, Shanghai, China, May 2013, paper MOPWO049, p. 1005.

[8] S. Redaelli *et al.*, "Experience with High-intensity Beam Scraping and Tail Population at the Large Hadron Collider,", in *Proc. IPAC'13*, Shanghai, China, May 2013, paper MOPWO039, p. 978.

[9] R. Bruce, A. Marsili, and S. Redaelli, "Cleaning Performance with 11 T Dipoles and Local Dispersion Suppressor Collimation at the LHC," in *Proc. IPAC'14*, Dresden, Germany, Jun. 2014, paper MOPRO042, p. 170.

[10] G. Stancari *et al.*, Phys. Rev. Lett. **107**, 084802 (2011).

[11] T. Bear, "Machine Protection of LHC Crab Cavities," presented at the 5th LHC Crab Cavity Workshop, `https://indico.cern.ch/event/149614`

[12] A. Santamaría García*et al.*, "Limits on Failure Scenarios for Crab Cavities in the HL-LHC," in *Proc. IPAC'15*, Richmond, VA, USA, May 2015, paper THPF095, these proceedings.

[13] O. Brüning and F. Willeke, Phys. Rev. Lett. **76**, 3719 (1995).

[14] G. Stancari *et al.*, "Collimation with Hollow Electron Beams: a Proposed Design for the LHC Upgrade," in *Proc. NA-PAC'13*, Pasadena, CA, USA, Sep.-Oct. 2013, paper TUOCA1, p. 413.

[15] G. Stancari, V. Moens, S. Redaelli, "Beam Dynamics in an Electron Lens with the WARP Particle-in-cell Code," in *Proc. IPAC'14*, Dresden, Germany, Jun. 2014, paper MOPME033, p. 451.

[16] V. Moens, "Experimental and numerical studies on the proposed application of hollow electron beam collimation for the LHC at CERN," Masters thesis, École Polytechnique Fédérale de Lausanne (EPFL), Switzerland, CERN-THESIS-2013-126, 2013; also available from FERMILAB, Batavia, IL, USA, as FERMILAB-MASTERS-2013-02, 2013.

Copyright © 2015 CC-BY-3.0 and by the respective authors

ISBN 978-3-95450-168-7