Quench Protection of Focusing Lenses of the PXIE SSR1 Cryomodule

I. Terechkine[2] (FNAL[1])

***Abstract*—Each of four solenoid-based focusing lenses installed in the SSR1 cryomodule of PXIE test stand at FNAL makes use of three coils. The main coil is designed to deliver needed focusing strength; two "flux return" coils are added to modify spatial distribution of magnetic field inside the cryomodule in a way that minimizes the field near the walls of superconducting RF cavities that the cryomodule houses. These two coils are much smaller in volume than the main (focusing) coil; they are electrically connected in series to the main coil, generate magnetic field that is opposite in direction to that in the main coil, and are coupled with the main coil inductively. If quench happens in one of these coils, temperature and temperature gradients inside the quenching coil can result in thermal and mechanical damage of electric insulation. If the main coil quenches, the voltage generated inside can be too high for the insulation to withstand. Both scenarios can lead to irreversible damage of the lens. This report summarizes results of study made to find reliable quench protection configuration for the focusing lenses designed for PXIE SSR1 cryomodule.**

***Index Terms*—Accelerator magnets, inductively coupled coils, quench protection, superconducting magnets.**

I. Introduction

One of primary requirements to focusing lenses installed inside cryomodules of superconducting linacs is, besides providing needed focusing and steering, minimization of fringe magnetic field that affects performance of accelerating cavities installed in the cryomodules. That's why each lens is usually equipped with a magnetic shield, which can be active, or passive, or combination of both. For example, in focusing lenses developed for the HINS project at FNAL, so called bucking coils were employed in combination with iron-based flux return [1]. For this configuration of the focusing lenses, a computational code was generated that helped in analyzing propagation of normally-conducting zone during quench events in coils of the lens as well as in predicting the maximum temperature and the voltage in the windings relative to the ground [2].

The requirement of the minimum stray field, although significantly relaxed, remains also for the SSR1 lens of PXIE test facility, so this lens was also designed with the use of bucking coils. In this case, no iron-based flux return was used and the bucking coils were configured as flux return windings coaxial with the main coil [3]. Sketch in Fig. 1 shows main geometry features of the lens. Shown in the figure is the main coil (MC), which is built as single solenoid-type winding, and a flux return coil consisting of two separate windings: BC1 and BC2. The geometry of the lens was optimized to provide minimum fringe field in the area where superconducting cavity is located in the PXIE SSR1 cryomodule. 54-filament 0.4 mm NbTi strand made by Oxford Wire&Cable Service, Inc. Company was used. The number of turns in the main coil ($N_{MC} \approx 12670$) and in each of the bucking coils ($N_{BC} \approx 1620$) was chosen to satisfy the requirement for the focusing strength of the lens of 4 $T^2 \cdot m$ reached at 2 K using the operating current of less than 100 A. Inductance of the lens with all coils connected in series $L \approx 2.75$ H. The energy stored in the magnet at the maximum current is ~14 kJ; this and also the high inductance of the magnet are the signs pointing to possible difficulties in finding a safe quench protection configuration.

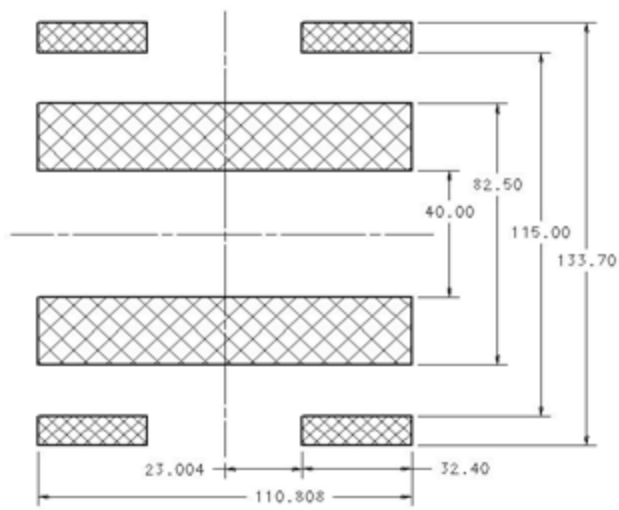

Fig. 1. Geometry of PXIE SSR1 lens; dimensions are in millimeters.

The following limits of critical parameters were accepted for quench propagation and protection analysis: the maximum temperature in a quenching coil should not exceed ~300 K, and the maximum voltage to the ground at any point in the lens should not exceed ~500 V.

Generalized electric scheme of quench protection circuit, which is essentially a discharge scheme for the energy initially stored in the lens, is shown in Fig. 2. The following naming agreement is used in this paper:

- C1 (coil #1) is the main coil (or MC).
- C2 (coil #2) is the BC1 part of the flux return coil. It is assumed that quench in the flux return coil happens in C2.
- Ground is placed between C1 and C2.
- C3 (coil #3) is the BC2 part of the flux return coil.

[1] Operated by Fermi Research Alliance, LLC under Contract No. De-AC02-07CH11359 with the United States Department of Energy.
[2] Iouri Terechkine is with Fermi National Accelerator Laboratory, Batavia, IL 80510 USA. Phone: 630-840-4017; e-mail: terechki@fnal.gov.

- Rw is the resistance of elements of the scheme (except the coils) that are connected in series in the discharge circuit. It includes the resistance of normally conducting wires in the circuit and a "dump" resistor introduced when the presence of the normally conducting zone in the winding is detected.

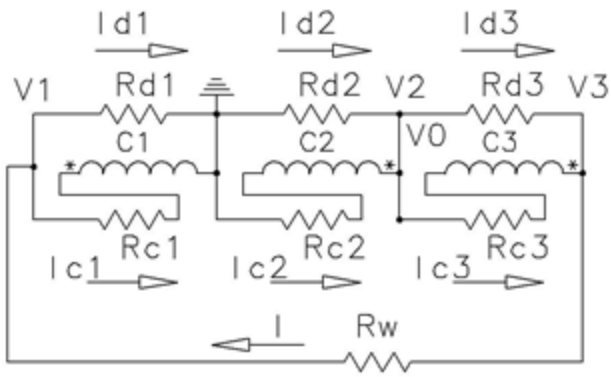

Fig. 2. General electric scheme of quench protection circuit.

This paper describes algorithm used to study quench propagation in coils of the lens and summarizes results of a search for acceptable quench protection configuration. Symbolic terminology used here corresponds to that accepted in MATLAB environment.

II. Algorithm for Modeling Quench Propagation

Approach to modeling quench propagation in a system of inductively coupled superconducting coils was described in details in [4]. Case versions of the scheme in Fig. 2 were studied in [5] in the attempt to find a simple and reliable solution for the quench protection problem. As the coils in the lens are connected in series and coupled inductively, a matrix of inductances is used in the analysis:

$$\{M\} = \begin{Bmatrix} M11 & M12 & M13 \\ M21 & M22 & M23 \\ M31 & M32 & M33 \end{Bmatrix}.$$

Each element of the matrix *Mmn* represents mutual inductance (in Henry) between coils *m* and *n* of the lens. For the SSR1 focusing lens described in [3], this matrix can be written as following:

$$\{M\} = \begin{Bmatrix} 3.40 & -0.40 & -0.40 \\ -0.40 & 0.42 & 0.06 \\ -0.40 & 0.06 & 0.42 \end{Bmatrix}.$$

Negative values of mutual inductances reflect the fact that the direction of magnet field generated by the bucking coils is opposite to that generated by the main coil.

Currents in each coil are represented by the vector $\{Ic\} = \{Ic1, Ic2, Ic3\}$, current derivatives - by the vector $\{dIdt\} = \left\{\frac{dIc1}{dt}, \frac{dIc2}{dt}, \frac{dIc3}{dt}\right\}$, and resistances of quenching coils - by the vector $\{Rc\} = \{Rc1, Rc2, Rc3\}$.

For each configuration of the protection circuit that needs to be analyzed, a circuit equation is generated that takes into account all details of the connection scheme. It has the next general form:

$$\{dIdt\} \text{ x } \{SIM\} = \{I\} \text{ x } \{SRM\}. \quad (1)$$

In this equation, vector {I} = [{Ic}, Iw], {*SIM*} is the system inductance matrix, which is a derivative of the matrix {*M*}, {*SRM*} is the system resistance matrix composed of the values of resistors *Rd* connected in parallel to the coils in the lens, resistor *Rw*, and resistances *Rc* of each coil during quenching. Resistances *Rc* change in time as quench propagates through the volume of the quenching coil. For the case when "dump" resistors are connected in parallel to every coil in the system, 4x4 {*SRM*} matrix can be written as following:

$$\{SRM\} = [\{Res\},\ \{-R_\Sigma\}^T], \quad (2)$$

where

$$\{R_\Sigma\} = [\{Rc\},\ Rw], \quad (3)$$

and

$$\{Res\} = \begin{bmatrix} -(Rd1 + Rc1) & 0 & 0 \\ 0 & -(Rd2 + Rc2) & 0 \\ 0 & 0 & -(Rd3 + Rc3) \\ Rd1 & Rd2 & Rd3 \end{bmatrix} \quad (4)$$

System inductance matrix {*SIM*} for the same configuration of the protection circuit

$$\{SIM\} = [\{M\},\ \{\text{sum}(\{M,2\})\}]. \quad (5)$$

Circuit equation (1) is solved in steps, starting with some initial (seed) temperature distribution at the location of quench. If initial temperature exceeds the superconductivity threshold at any point, resistance of quenching coil becomes finite, which defines the right part of equation (1). At each time step, vectors of currents and current derivatives are found. Then power deposition in quenching coils is calculated and heat propagation step is performed. As a result, a new temperature distribution matrix is generated and the process is repeated as needed.

To get reliable results, it is very important to know relevant properties of all involved materials in the temperature range from the minimum of ~2 K to the maximum exceeding 300 K. Obtaining and parameterizing material properties constitutes major part of efforts in this type of studies. Previous experience of quench protection analysis for HINS project at FNAL [1] accompanied by testing of prototype systems provided certain level of confidence that the material properties data we used are sufficiently reliable.

III. Quench Propagation Study

Extracting energy stored in the magnetic field of focusing elements in cryomodules and dissipating it outside helps in limiting the loss of liquid helium during quenching and in increasing beam availability factor. That's why using resistive "dump" elements mounted outside cryomodules is a preferred way of protection. Corresponding study was performed by analyzing different versions of protection scheme in Fig. 2 by modeling. MATLAB was the first modeling tool we used as it allows straightforward implementation of the algorithm described above.

It worth to mention that the criterion of the maximum voltage applies not only to the voltage at points of connection in Fig. 2, but also to the voltage generated inside quenching coils. This voltage is a combination of the resistive part, which is due to the apparent resistance of the quenching coil, and the inductive part, which comes from the mutual inductances between the turns of the quenching coil and the rest of the coils in the lens. In the case of quenching main coil, this

voltage can be much higher than the acceptable level and a danger of breakdown in the ground insulation in the coils becomes real.

Results of quench propagation study can be summarized as the following:

- Dump resistor connected in parallel to the main coil of the lens does not play significant role in any protection scheme;
- Too high voltage develops in quenching main coil if no series circuit resistor is used;
- Too high voltage develops in quenching bucking coil if no resistors connected in parallel to the bucking coils are used;
- Both the main and the bucking coils are protected against quench in any of them if the bucking coils are shunted by dump resistors and a series resistor is introduced in the circuit immediately after quench is detected.

The following values of the dumps can be used, to ensure reliable protection of the coils: $Rd2 = Rd3 \approx 1\ \Omega$, $Rw \approx 3\ \Omega$. For these values of the dumps, the maximum voltage inside quenching main coil is ~350 V, the maximum voltage in the circuit outside the coils is ~300 V. Fig. 3 shows distribution of voltage inside quenching main coil in time for this case. The maximum voltage is observed in the middle of the coil at the moment $t_m \approx 70$ ms after the start of the quench.

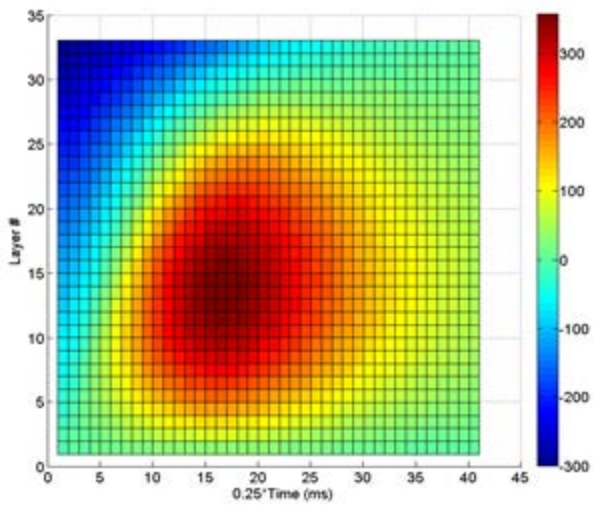

Fig. 3. Voltage inside quenching main coil; Rd = 1 Ω, Rw = 3 Ω.

In the case of quenching bucking coil, up to 80% of the total stored energy can be removed out of the cryomodule. The temperature in quenching bucking coil does not exceed 90 K.

The approach to modeling quench propagation using MATLAB environment seems straightforward and quite reliable as it allows simultaneous iterative solving of equations describing heat propagation in quenching system and evolution of electrical parameters in current discharge circuits. On the other hand, it requires significant preliminary work to prepare matrixes of magnetic field on turns of every quenching coil and matrixes of mutual inductances between the turns of quenching coils and coils of the lens. The first matrix is needed to evaluate phase position (T, j, B) of the turns relative to the critical surface of the strand. If non-linear effects are significant, e.g. when ferromagnetic materials are used, multi-dimensional matrixes must be built and then used to properly calculate magnetic field within the system at any current by using multi-dimensional interpolation. The second matrix is used to calculate voltage inside quenching coils. Besides, each specific configuration of quench protection circuit requires some modification of a way how the currents in the system are calculated.

Using "multi-turn coil" and "electric circuit" interfaces of COMSOL Multiphysics modeling software makes it possible to automate calculation of magnetic field and mutual inductances even with non-linear effects taken into account. This suggests significant savings in time of the modeling and allows building a framework for studying more complicated magnetic systems. As initial step towards using COMSOL environment, validation of this new way to model quench propagation in superconducting magnets was attempted in [6], where quench propagation modeling for relatively simple magnetic system made in COMSOL was compared with that made using MATLAB. Material properties (specific heat, resistivity, and thermal conductance of all involved materials and composites) and critical surface of NbTi strand were expressed at functions of the temperature T, magnetic field B, and the purity of materials (RRR). Heat transfer to superfluid Helium was also taken into account by using appropriate approximation [6].

Two ways of calculating the current in the circuit during quenching were employed – the first way was based on circuit equations, as in MATLAB environment, and the second one used the circuit interface of COMSOL. Results obtained by using these two approaches agree; they also agree with results obtained by direct modeling using MATLAB.

IV. Conclusion

A solution for quench protection of superconducting focusing lens designed for installation in SSR1 cryomodule of PXIE test stand at FNAL was found by making the analysis of quench propagation in MATLAB modeling environment. Modeling algorithm was verified by comparing results of the modeling with what was measured during testing of the device. An alternative way of making similar studies by using COMSOL multiphysics environment was also investigated. Results of quench propagation analysis obtained that way were consistent with what was obtained using MATLAB approach. The new way promises significant simplification and generalization of this type of studies.

References

[1] M. Tartaglia, et al, "Summary of HINS Focusing Solenoid Production and Test," MT-21, China, October 2009, report 3AP08.

[2] I. Terechkine, V. Veretennikov, "Normal Zone Propagation in Superconducting Focusing Solenoids and Related Quench Protection Issues," MT-20, Philadelphia, August 2007, report 3M02.

[3] I. Terechkine *et al.*, "Solenoid-Based Focusing Lens for the Low-Beta Section of a Superconducting Proton Linac," this conference, paper ID 1928501.

[4] E. Khabiboulline and I. Terechkine, "Modeling Quench Propagation in Inductively Coupled System of Coils," FNAL TD note TD-11-011, August 2011.

[5] I. Terechkine, "Quench Protection of the PXIE SSR1 Focusing Lens," FNAL TD note TD-13-011, October 2013.

[6] I. Terechkine, "Propagation of Normal Zone in Quenching Superconducting Solenoids. Modeling using COMSOL," FNAL TD note TD-14-003, April 2014.