MODELING OF MAGNETRON TRANSMITTER FOR THE PROJECT X CW 1 GEV LINAC*

Grigory Kazakevich#, Rolland Johnson,
Muons, Inc., Batavia, 60510 IL, USA

Vyacheslav P. Yakovlev, Brian E. Chase, Ralph J. Pasquinelli,
Fermilab, Batavia, 60510 IL, USA

Abstract

A 650 MHz 50 kW transmitter with a wide-band control in phase and power, based on injection-locked CW magnetrons has been proposed to drive individually Superconducting RF (SRF) cavities for the Project X CW 1 GeV H^- linac. Utilization of the magnetron RF sources for the intensity-frontier project will save a significant capital cost in comparison with traditional RF sources based on klystrons, Inductive Output Tubes (IOTs), solid-state amplifiers. The transmitter setup has been modelled experimentally using 2.45 GHz CW magnetrons with output power up to 1 kW operating in injection-locked mode in pulsed regime with long pulse duration. Measurements with the modelling setups indicated capability of the proposed transmitter to power the SRF cavities suppressing parasitic modulation of the accelerating field caused by mechanical oscillation (the microphonics), beam loading, dynamic tuning errors, and the low-frequency disturbances of the magnetron performance. Results of the experimental tests are analyzed and discussed in this paper.

INTRODUCTION

State of the art the intensity-frontier Project X H^- superconducting 1 GeV linac requires CW, 650 MHz RF sources to power SRF cavities. One of general requirements following from dynamic of non-relativistic or weakly relativistic beam is conservation of a small emittance during the process of acceleration. For this is necessary keeping the accelerating voltage phase and amplitude deviations to be less than 1 degree and 1% of nominal, respectively, [1].

To keep amplitude of accelerating voltage with the required accuracy in spite of microphonics, a dynamic control of the accelerating voltage is required, [2, 3].

The average RF power to feed each SRF cavity, providing an energy gain of ~17 MeV/m for average beam current of 2 mA at the microphonics magnitude, δf=20 Hz, one can determine by the following equation:

$$P_g = \frac{V^2}{4Q_E(r/Q)}\left[\left(1+\frac{I\cos\varphi(r/Q)Q_E}{V}\right)^2+\left(Q_E\frac{2\delta f}{f}\right)^2\right].$$

Here P_g is the RF source power, V is gradient of the accelerating field in the 1 m long SRF cavity for zero synchronous phase, (r/Q) is the cavity impedance, Q_E is the cavity external Q-factor, f is the cavity frequency, δf is the microphonics magnitude, φ is the synchronous phase.

For ILC-type 650 MHz SRF cavity with (r/Q)≈ 638 and φ ≈-10 degrees the equation gives P_g≈ 38.5 kW at the necessary range of the power variation of ~ 5 kW. Considering reflections and insertion losses in the RF system one can evaluate the RF source nominal power of ≈ 50 kW necessary for each individual SRF cavity of the CW linac.

To compensate perturbations caused by beam loading, and dynamic tuning errors, a control of phase of the RF field is necessary in each individual SRF cavity.

Traditional RF sources based on klystrons, Inductive Output Tubes (IOTs), solid-state amplifiers are acceptable to provide the required power and the phase control, but the capital cost of the RF system is a significant part of the accelerator project. MW-scale CW klystrons powering groups of the cavities can reduce the costs, but this technique only allows a control of the vector sum of the accelerating voltage in the group. The vector sum control has not been tested in driving SRF cavities for non-relativistic or weakly relativistic particles; it may cause emittance growth because of non-optimized values of phase and amplitude of the field in individual SRF cavities.

The CW injection-locked magnetrons are efficient and less expensive than the aforementioned RF sources, [4].

Analysis of operation of magnetrons injection-locked by a phase-modulated signal, [5-7] demonstrates that the magnetron response on the locking signal is quite linear, has small phase error and quite fast, [8]. The features of the injection-locked magnetrons allow developing the RF source based on the CW magnetrons controlled in phase and power to suppress the perturbations of the magnetron phase performance inherent in magnetrons and moreover to satisfy requirements of the Project X H^- linac as well.

The experiments performed with CW 1 kW injection-locked magnetrons and evaluations presented in this paper indicate that the phase controlled transmitter based on the injection-locked magnetrons with a Low Level RF system including a closed wideband loop will allow eliminating all expected low-frequency perturbations of the accelerating field in SRF cavity including the perturbations caused by the phase performance of the injection-locked magnetron.

Results of the experimental tests are analysed and discussed in this paper.

*Work is supported by the Fermilab and Muons, Inc. collaboration
#grigory@muonsinc.com; gkazakevitch@yahoo.com

Operated by Fermi Research Alliance, LLC under Contract No. De-AC02-07CH11359 with the United States Department of Energy.

THE MAGNETRON TRANSMITTER FOR THE PROJECT X CW H$^-$ LINAC

A concept of the 650 MHz, 50 kW magnetron transmitter (with phase and power to be controlled by a LLRF) for the Project X H$^-$ CW linac is presented in Figure 1, [9].

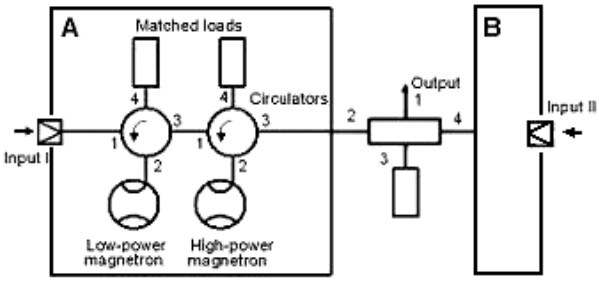

Figure 1: Block-diagram of the magnetron transmitter available for a fast control in phase and power.

The transmitter consists of two identical channels (A and B) of cascaded injection-locked magnetrons, combined in power by a 3-dB hybrid. The phase management is provided by controlled simultaneously and equally the phases at inputs of both 2-cascade magnetrons. The power management is provided at a control by phase difference at the inputs of the 2-cascade magnetrons. The 2-cascade injection-locked magnetron system allows reducing the required locking power.

EXPERIMENTAL FACILITY

The facility was developed for experimental tests of the CW transmitter active components using two CW, 1 kW microwave oven magnetrons. The magnetrons with free run frequencies differing by ≤ 5.7 MHz operated in injection-locked mode at the locking frequency of 2.469 GHz in pulsed regime, at pulse duration of 2.5-15 ms at low repetition rate. Each magnetron was installed in a separate module with necessary RF components, Figure 2. The modules were used to test performance of all active components of the proposed transmitter in various setups.

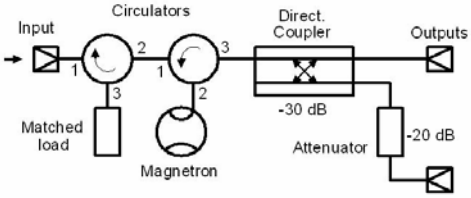

Figure 2: The magnetron experimental module for tests of the transmitter setup.

The experimental apparatus for the tests included a pulsed modulator to power the magnetrons, wide-band CW Travelling-Wave Tube (TWT) amplifiers driven by N5181A Agilent generator, to lock the magnetrons, and a measuring equipment.

The modulator with partial discharge of storage capacitor provided simultaneous operation of the both magnetrons, having dissimilar Volt-Amps characteristics; the magnetron with lower anode voltage was fed by a compensated divider. The HV power supply ripple were negligibly low at the modulator output, however the modulator introduced a slope of the output voltage caused by discharge of the storage capacitor. The slope at pulse duration of 5 ms did not exceed 0.4% when 2 magnetrons operated simultaneously.

TESTS OF SINGLE AND 2-CASCADE INJECTION-LOCKED MAGNETRONS

Setup for tests of operation of injection-locked singles and 2-cascade magnetrons is shown in Figure 3, [8].

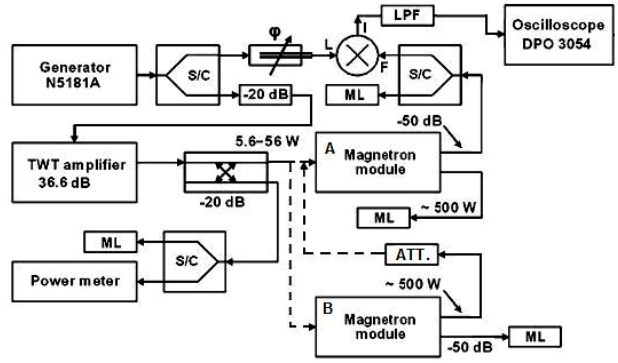

Figure 3: Setup to test operation of single and 2-cascade injection-locked magnetrons. S/C is a splitter/combiner, LPF is a low pass filter, ML is a matched load, ATT is an attenuator. Powers of the magnetrons are depicted in this figure.

The single injection-locked magnetrons were tested in configuration using module A with the magnetron locked by the TWT amplifier and fed by the modulator, while the module B was disconnected from the amplifier and the modulator. The 2-cascade magnetron was tested in configuration, in which the magnetron module B was locked by the TWT amplifier while the module A magnetron was connected via attenuator to the module B output. In this case the magnetron in the module A was locked by the pulsed signal of magnetron B lowered in the attenuator. The modulator fed both the magnetrons.

Traces of the magnetron intrapulse phase variations are plotted in Figure 4.

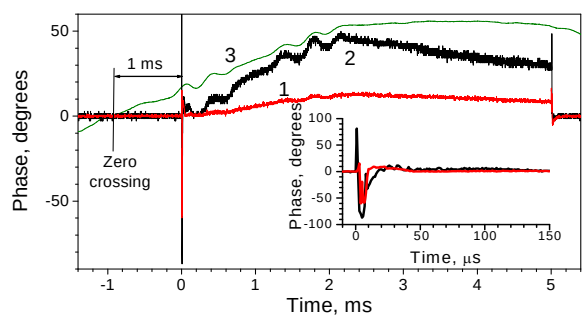

Figure 4: Phase performance of the single, trace 1, and 2-cascade, trace 2, injection-locked magnetrons. Trace 3 shows voltage of the AC line. Trace 1 was measured at the magnetron locking power of -15.6 dB; Trace 2 was measured at the locking power of the magnetron B of -15 dB and the attenuator value of 15 dB. Considering the attenuator value the locking power of the 2-cascade magnetron is -30 dB of the output power.

Shift of the triggering of the modulator vs. zero crossing of the AC line voltage minimized the magnitude (peak-to-peak) of the magnetrons phase perturbations resulted from the magnetic field induced by the filament circuitry, [10].

POWER CONTROL OF INJECTION-LOCKED MAGNETRONS

The fast power control of the injection-locked magnetrons using power combining first was realized in the setup shown in Figure 5, [10].

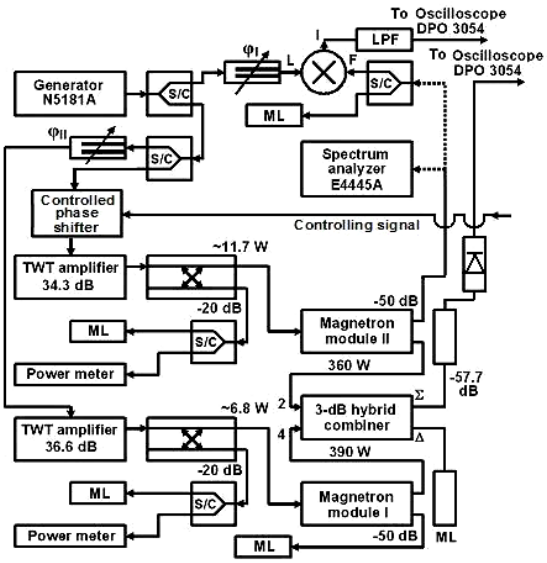

Figure 5: Setup with the injection-locked magnetrons for test of the power control by power combining.

The power control, Figures 1 and 5, is realized by a vector summation of output signals of the injection-locked magnetrons controlled by the phase difference.

Performance of the injection-locked magnetrons at fast power control was demonstrated controlling the analogue phase shifter JSPHS-2484 by a sequence of meander-like pulses with period of ≈30 μs, Figure 6.

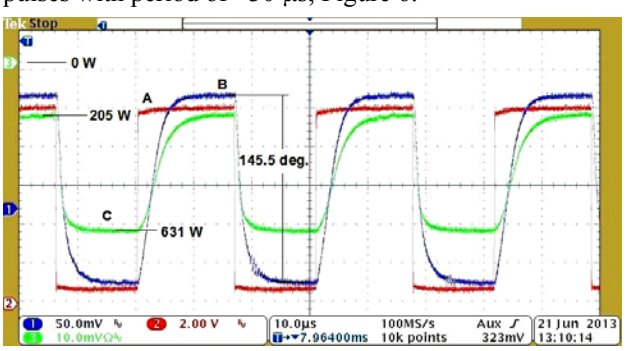

Figure 6: Trace A is shape of the voltage, controlling the phase shifter JSPHS-2484, trace B is the magnetron II phase response on the shifter fast control, trace C shows variation of the power measured by the calibrated detector at the port "Σ" of the 3 dB 180 degrees hybrid.

The high-frequency noise measured for single, 2-cascade injection-locked magnetrons and magnetrons with power combining does not exceed 0.4, 0.7 and 0.5 degrees (rms), respectively.

The bandwidth of the phase control was measured in setups, Figures 3, 5, by a phase modulation in generator N5181A at various modulating frequencies. Measured with Signal Analyzer MXA N9020A in the phase modulation domain the magnitude transfer characteristics of the magnetrons locked by the phase-modulated signal showed that the frequency cutoff at the locking power of ≥-13 dB for single and ≥-27 dB for 2-cascade magnetron setup is ≥1 MHz. It implies that the injection-locked magnetron RF source managed in phase and power by a LLRF controller with a closed feedback loop at the bandwidth of ≈100 kHz will be able to suppress all expected low-frequency perturbations in SRF cavities including the perturbations resulted from the magnetrons.

CONCLUSION

Setups of all active components of the proposed magnetron transmitter rapidly controllable in phase and power by the phase-modulated signal and intended for CW H^- linac of the Project X have been tested using 2.45 GHz 1 kW magnetrons operating in injection-locked mode. The experimental tests verified that the response of all active components of the transmitter based on the injection-locked magnetrons at the control is quite linear, provides small phase error and is quite fast to use a Low Level RF (LLRF) controlling system with a wideband closed loop. The ratio of locking power to output power of -27 dB for 2-cascade magnetron looks feasible at bandwidth of the magnetron phase control of ≥1 MHz. Measured high-frequency phase noise of the transmitter components <1 degree, rms, satisfies requirements of the Project X H^- superconducting linac. The magnetron transmitter with the LLRF controller will be able eliminating all expected low-frequency perturbations of the accelerating field in the SRF cavity including perturbations caused by mechanical oscillations, beam loading, dynamic detuning errors and perturbations resulted from performance of the injection-locked magnetrons, including phase pushing and perturbation caused by induced alternative magnetic field.

REFERENCES

[1] N. Solyak et al., WE101, LINAC10, Tsukuba, Japan

[2] H. Padamsee et al., *in* "RF Superconductivity for Accelerators", Wiley & Sons, Inc, 1998

[3] J. R. Delayen, "Electronic damping of microphonics in superconducting cavities", PAC 01 Proceedings, Chicago, IL, USA, 2001

[4] A.C. Dexter et al., PRST-AB,14, 032001, 2011

[5] G. Kazakevitch et al., NIM A 528 (2004) 115–119

[6] G.M. Kazakevich et al., PRST-AB, 12, 040701, 2009

[7] G.M. Kazakevich et al., NIM A 647 (2011) 10-16

[8] G. Kazakevich et al., WEPPC059, IPAC12 Proceedings, New Orleans, USA

[9] G. Kazakevich and V. Yakovlev, Project X document 896, http://projectx-docdb.fnal.gov

[10] G. Kazakevich et al., TUOAT12 report at 11-th International Topical Meeting AccApp 13, Bruges, Belgium, 2013