PERFORMANCE DEGRADATION OF A SUPERCONDUCTING CAVITY QUENCHING IN MAGNETIC FIELD*

I. Terechkine#, T. Khabiboulline, D. Sergatskov, FNAL, Batavia, IL 60510, USA

Abstract

Performance degradation of superconducting RF (SRF) cavities induced by magnetic field trapped in its walls is fairly well understood phenomenon; nevertheless, criteria for setting requirements for the maximum level of magnetic field generated inside cryomodules after the cavities become superconducting has not been agreed upon. Superconducting walls of the cavities protect the RF surface from this component of the magnetic field unless quench happens; magnetic flux penetrates inside the cavity through normally conducting opening generated during the quench and becomes trapped in the walls after it cools down again. The amount of the trapped magnetic flux depends on the size of normally conducting zone developed in walls of the cavity during quenching; it can be evaluated by modelling quench propagation (QP). In this study, we compare performance degradation of several cavities of different shapes and frequencies predicted with the use of the QP modelling with the data obtained by direct RF measurements; the magnetic field was generated by superconducting coils mounted in the vicinity of quenching cavities. The found criterion for establishing requirements for the maximum magnetic field in cryomodules can be used with any RF structure and magnetic system.

INTRODUCTION

To reduce beam loss in high power superconducting linear RF accelerators of ions (linacs), focusing period in the beam line must be sufficiently short. Especially this is true for the low-energy parts of the accelerators where charged particles move relatively slow ($\beta \ll 1$); here having focusing lenses inside cryomodules provides sensible advantages. This approach has been chosen for many existing accelerators and those in development (e.g. see [1].)

Power loss in superconducting RF cavities is a major source of heat influx in the cryomodules. As this power loss can be affected by magnetic field trapped in superconducting walls of the cavities, the cavities must be thoroughly magnetically shielded, which can be a challenge if the allowed field is low [2]. Diamagnetism of superconducting niobium can be naturally employed to shield the cavities. This protection is broken when the cavity quenches as part of its surface warms up above the superconductivity threshold. During quenching, magnetic flux penetrates inside the cavity through the normally conducting opening and becomes trapped in the cavity wall after quench. Experimental studies of the flux trapping show that, with moderately high magnetic field, up to 100% of the magnetic flux that penetrates inside the cavity can be trapped [3]. The fraction of the trapped flux depends on the purity, structure, and the treatment history of niobium [4].

The main motivation for this study was an attempt to formulate practical criterion that could be used for setting limits on the magnetic field in cryomodules of linacs and verification of this criterion by direct measurements using superconducting RF structures.

TRAPPED FLUX CRITERION

Performance degradation of an RF cavity is manifested by the drop of its quality factor. Trapped magnetic flux that reduces the unloaded quality factor $\boldsymbol{Q_0}$ to the level $\boldsymbol{Q_1=\eta\cdot Q_0}$ can be found using the next expression [5]:

$$\Phi_{tr} = \frac{2\mu_0\Phi_0}{R_s\xi_0^2}\cdot\frac{fV}{\Lambda Q_0}\cdot\frac{1-\eta}{\eta}. \qquad (1)$$

In this expression $\mu_0=4\pi\cdot10^{-7}$ H/m is the permeability of empty space, $\Phi_0=2\cdot10^{-15}$ *Wb* is the magnetic flux quant, $\xi_0=3.9\cdot10^{-8}$ *m* is the coherent length in *Nb*, f is the frequency of the cavity, R_s is the surface resistance of *Nb* at this frequency, V is the volume of the cavity, and Λ is a dimension-free coefficient that defines magnetic energy density at the location of the quench relative to the average energy density in the cavity.

The first multiplier in (1) is fully defined by the properties of superconducting material. The second one is cavity-specific with $\boldsymbol{\Lambda}$ depending on quench location. The last multiplier relates the acceptable degree of degradation $\boldsymbol{\eta}$ with allowed amount of the trapped flux: if $\eta = 1$, no trapped flux is allowed; as $\eta\rightarrow0$, more flux can be tolerated. Possible risks related to smaller quality factor can be assessed at different quenching scenarios, and corresponding choice of η can be made taking into account available cooling power and distribution of RF magnetic field (or the energy density factor Λ) and expected static magnetic field on the cavity surface.

The amount of the trapped magnetic flux is defined by the size of a normally-conducting opening in the cavity wall during quenching; it can be calculated by modelling propagation of the quench in cavity walls.

QUENCH PROPAGATION

The surface density p of RF power loss in normally conducting walls of cavities can be expressed as

$$p = 2\Lambda\cdot\frac{WR_s}{\mu_0 V}, \qquad (2)$$

where W is the total energy stored in the cavity and the value of Λ is taken at the location of the quench. The rate of the energy dissipation can be expressed as

*Operated by Fermi Research Alliance, LLC under Contract No. De-AC02-07CH11359 with the United States Department of Energy.
#terechki@fnal.gov

$$\frac{\partial W}{\partial t} = -\frac{2\Lambda}{\mu_s \cdot V} \cdot \iint W R_s ds\,, \qquad (3)$$

where the integral is taken along the normally conducting surface of the quenching cavity. To find how the temperature in the cavity wall changes in time, this equation must be solved in the time domain simultaneously with the heat transfer equation and the heat influx equation (2). In the cryogenic environment the material properties are temperature-dependent; some of them can change by several orders of magnitude in the temperature range between 2 K and 300 K; needed data for thermal conductivity, specific heat, and surface resistance of Nb in this temperature range can be readily found in handbooks.

Although the initial phase of quench propagation can be considered adiabatic, in the end, cooling of the cavity surface by liquid helium (LHe) is what defines the maximum size of the normally conducting opening in the superconducting wall of a quenching cavity. Available data for the heat transfer from Nb into 2 K LHe mainly refer to tests made using small samples of different shapes and orientations. Graph in Fig. 1 shows accepted for this study dependence of the heat transfer coefficient ***h*** on the surface temperature ***T*** for the 2 K LHe; corresponding data set was compiled using several sources of information, including [6].

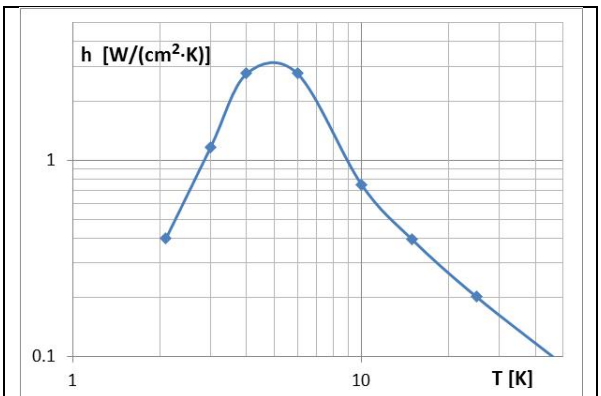

Figure 1: Heat transfer coefficient into LHe at 2 K.

There are several stages in the cavity quenching process [7]. First, the boundary of the normally-conducting zone (T ≈ 9.3 K) propagates along the surface heated by RF current; simultaneously, more slowly, this boundary moves into the depth of the cavity wall. No magnetic field penetration occurs at this point as the outer surface of the cavity wall is still superconducting. After the boundary of the normally conducting zone reaches the opposite side of the wall, which is cooled by liquid helium, the external magnetic field starts to penetrate inside the cavity. At this point, most of the energy stored in the cavity has already dissipated in the skin layer; the temperature in this layer can become quite high, often reaching and exceeding the room temperature level. Next, the heat propagates along the cavity wall; the cooling process gradually makes this propagation slower and at some point reverses its direction. Finally, the normally conducting opening shrinks, collapsing very fast in the end. Fig. 2 illustrates this process for the case of a one-cell 1.3 GHz elliptical cavity with the initially stored energy W_0 = 14 J and the quench starting point corresponding to Λ = 1.5; the radius of the normally conducting opening in the superconducting wall is shown as a function of time.

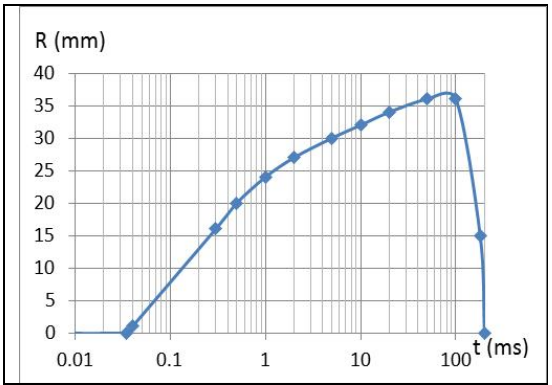

Figure 2: Radius of normally conducting opening in the superconducting wall of RF cavity: f = 1.3 GHz, Λ = 1.5, W_0 = 14 J.

As the size of the normally-conducting opening in the wall of a quenching cavity becomes known, it is straightforward to find the magnetic flux that crosses this surface for any magnetic system and arbitrary configuration of RF structure in a cryomodule using appropriate magnetic modelling tool. The found flux must be compared with the allowed limit expressed by (1) to judge on the adequacy of the magnetic shielding means in the cryomodule.

To be accepted for practical purposes, the described method needed to be verified; this verification was made by testing several superconducting cavities in the environment of known magnetic field.

VERIFICATION TESTS

The magnetic field for the tests was generated by a superconducting coil installed in the vicinity of tested RF structures in the vertical test stand (VTS) at FNAL. Position of the coil relative to the tested cavities was chosen in each test case based on available space in the VTS and expected location of the quench. When this location was not known, resistive quench heaters attached to the walls of tested cavities and activated by a pulse power supply were used [8].

During the tests, for several settings of current in the test coil, the unloaded (low-gradient) quality factor was measured before and after quenches, which were initiated at the relatively high (close to the required) gradients. For each tested RF structure, the dependence of the quality factor on the current in the test coil was compared with corresponding prediction of the modelling.

Three RF structures were tested this way: 325 MHz SSR1 spoke cavity built for PXIE test stand [8], 1.3 GHz one-cell elliptical Testla-type cavity [9], and 650 MHz one-cell elliptical cavity under study for the Project X

program at FNAL [10]. Results of all three tests have demonstrated good agreement with predicted degradation of performance due to the trapped magnetic flux. As an example, data related to the PXIE SSR1 cavity will be discussed in this report.

Fig. 3 shows modelling (and test) configuration for the SSR1 cavity with the test coil installed above the area that was found to be the most sensitive to the quenching in magnetic field ($\Lambda \approx 2.6$).

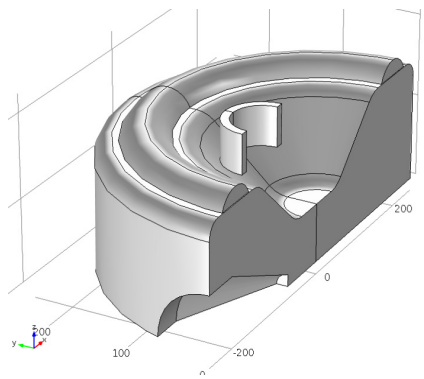

Figure 3: Test configuration with quench on the outside surface of the SSR1 cavity.

Quench propagation analysis for this cavity resulted in the next expression for the maximum radius of the normally conducting opening in the superconducting wall of the cavity with two parameters being the total stored energy W_0 and the energy density factor Λ:

$$R_m \text{ [mm]} = 25.5 + 9.8\cdot\Lambda^{-1} + 0.8\cdot W_0 \text{ [J]}. \qquad (4)$$

The volume of this cavity $V = 0.0473$ m^3, the resonant frequency f_0 = 325 MHz, and the surface resistance of RRR300 Nb $R_s = 7.4\cdot10^{-4}$ Ohm. The total energy stored in the cavity corresponding to the effective accelerating voltage of 2 *MV* is 14 *J*. Then R_m = 40.5 mm and the total magnetic flux Φ crossing the inner surface of the cavity $\Phi = 6.7\cdot10^{-6}$ *Wb/A*. It can be used to calculate resultant quality factor after quench. Fig. 4 compares results of this calculation with the data obtained by the measurements; 100% flux trapping was assumed.

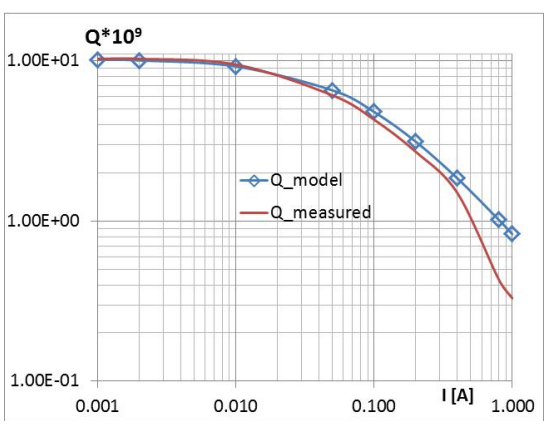

Figure 4: Calculated and measured quality factor of the SSR1 cavity quenching in magnetic field.

Curves similar to shown in Fig. 4 were also built for the two other tested cavities; the measured behaviour of the system was fairly close to the predicted. In all cases it was possible to restore the initial performance of the cavity by repeated quenching without magnetic field (I = 0). This restoration was full for moderate values of the current - up to ~0.3 *A* for the case in Fig. 4. The drop of the measured quality factor at higher currents in the test coil is explained by diffusion of the trapped magnetic flux out of the area which can be heated above the superconductivity threshold temperature during quench. One can fight this partial irreversibility with some increase of the RF power.

CONCLUSION

Degradation of superconducting RF cavities due to magnetic flux trapped during quenching was investigated by modelling and direct measurements using cavities of different shape and frequency. The calculations could satisfactory predict results of the measurements for all the cases. No restrictions exist to applying the used method for evaluation of performance of any superconducting RF system in magnetic field of any origin.

REFERENCES

[1] S. Nagaitsev et al., "PXIE: Project X Injector Experiment," IPAC'2012, proc. p. 3974 (2012).

[2] G. Davis, et al., "Magnetic Shielding of Solenoid-Based Focusing Lenses for Superconducting Sections of HINS Linac," FNAL TD note TD-09-029, (2009).

[3] C. Vallet, "Flux Trapping in Superconducting Cavities," EPAC'92, p. 1295 (1992).

[4] S, Aull, et al., "Trapped Magnetic Flux in Superconducting Niobium Samples," Phys. Rev. ST Accel. Beams 15, 062001 (2012).

[5] T. Khabiboulline, et al., "Acceptable Level of Magnetic Field on the Surface of a Superconducting RF Cavity," FNAL TD note TD-12-008, (2012).

[6] E.G. Brentari, et al., "Boiling Heat Transfer for Oxygen, Nitrogen, Hydrogen, and Helium," U.S. Department of Commerce, NTIS, PB-172 323.

[7] I. Terechkine, "Modelling Quench Propagation in Superconducting Cavity using COMSOL," FNAL TD note TD-11-019, Dec. 2011.

[8] T. Khabiboulline, et al., "SSR1 Cavity Quenching in the Presence of Magnetic Field," FNAL TD note TD-12-007, June 2012.

[9] T. Khabiboulline, et al., "Superconducting Cavity Quenching in the Presence of Magnetic Field," FNAL TD note TD-11-020, Dec. 2011.

[10] T. Khabiboulline, et al., "650 MHz Elliptical Cavity Performance Degradation Induced by Magnetic Field of a Test Coil," FNAL TD note TD-13-002, March 2013.