Project X Superconducting Spoke Resonator Test Cryostat 2 K Conversion

M. Chen, A. Dalesandro, B. Hansen, A. Klebaner, T. Nicol, Y. Orlov, T. Peterson

Fermi National Accelerator Laboratory, P.O. Box 500, Batavia, IL 60510, USA

Abstract. Superconducting spoke resonators (SSR1 and SSR2) envisioned for Project X will be developed in Fermilab and operated at temperatures down to 2 K in continuous wave (CW) mode. Each spoke cavity will be tested individually in a cryostat that replicates conditions in the longer multi-cavity cryomodules. This test cryostat has all the features of the longer cryomodules – magnetic shielding, 80 K thermal shield, multi-layer insulation, support post, and input coupler [1]. Fermilab is in the processing of retrofitting the existing test cryostat which was originally designed for operation at 4.5 K. This paper describes the design of the conversion of the current test cryostat, flexible transfer lines, helium relief system and cryogenics interface.

Keywords: Test Cryostat, internal piping, transfer line, pressure relief.

INTRODUCTION

The existing 325 MHz cavity test cryostat in Fermilab Meson Detector Building (MDB) was originally designed for High Intensity Neutrino Source (HINS) program, and is capable of cooling down and operating a single dressed cavity nominally to 4.5K. The goal is to convert the test cryostat so that it will enable operation of all single spoke resonators (SSR1 and SSR2) envisioned for Project X at temperatures down to 2 K in CW mode. The design utilizes many of the features found in the current 1.3 GHz horizontal test facility (HTS) in the cave adjacent to the 325 MHz cavity test cryostat [2]. The existing cryostat vessel remains the same while the top hat and the internal piping systems are modified to meet the 2 K requirements. Flexible transfer lines and a new pressure relief line are introduced. Interfaces to the MDB cryogenic distribution system are also addressed. The existing installation and new design of the test cryostat are shown in Figure 1.

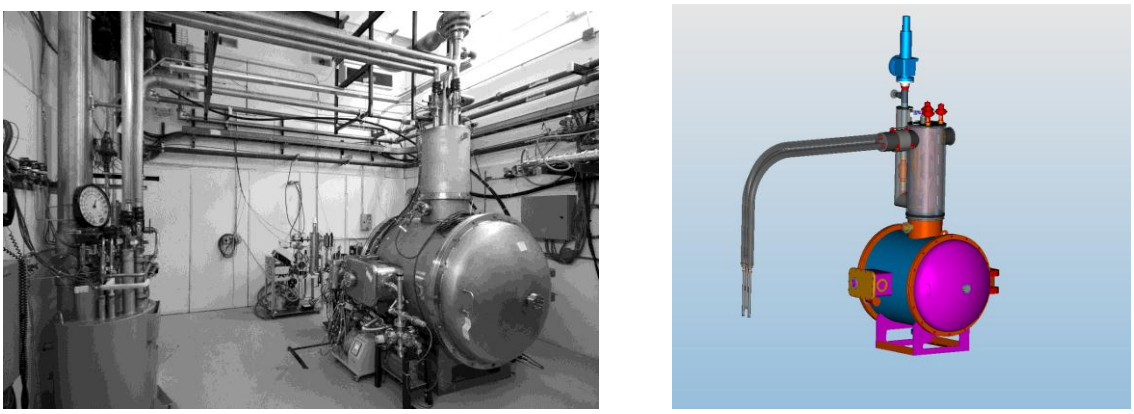

(a) (b)

FIGURE 1. (a) Existing test cryostat installation, (b) New design of the test cryostat.

Operated by Fermi Research Alliance, LLC under Contract No. De-AC02-07CH11359 with the United States Department of Energy.

INTERNAL PIPING

The new piping system uses a heat exchanger and JT valve in order to achieve the operating temperature at 2 K. The heat exchanger is purchased welded-plates type and is similar as the one used in CERN but in a smaller size. The nominal flow rate of the heat exchanger is 1.5 g/s and the cooling capacity is about 27 W at 2 K. The requirement to cool down from room temperature to operating temperature is less than 24 hours and transition from 150 K to 70 K is 1 hour. The warm up to room temperature is also required to be completed in less than 24 hours [2]. The internal piping flow schematic is shown in Figure 2. Inside of the dashed line is the internal piping system installed in the test cryostat. Outside of the line is the cryogenic distribution system installed in MDB. In the test cave there is a bayonet feed can which provides one-phase helium supply, two-phase helium return and nitrogen supply. One-phase helium goes into a phase separator and comes out two liquid lines. One is to provide 2 K helium by going through a heat exchanger, JT control valve and getting into a cavity supply header. The other one is for the fast cool down and fill to the cavity bottom controlled by a control valve (EVCD). Two-phase helium from the phase separator through a control valve (EVHS) goes back to the bayonet feed can. There are metal gasket face seal connectors in the loop if 5 K interception is needed in the future. A liquid level probe is attached to the cavity supply header. Nitrogen supply is to provide 80 K thermal shielding by going through the top hat, the vacuum vessel, pressure relief jacket, and back to the nitrogen return.

The supply header accommodates the 2 K stream from JT valve, liquid level dewar, low pressure return and dressed cavity connection. The liquid level dewar has features of a cold connector for the temperature and liquid level sensors and a heater for the fast warm up. The piping system has two assemblies shown in Figure 3. The top half is installed inside of the top hat. The bottom half is installed in the cryostat vessel. The two assemblies are connected through Conflat flanges. All the pipe sizes are determined based on maximum allowed pressure drops. The liquid nitrogen circuit piping is designed for 80 psi which is the design pressure of the incoming transfer line. The liquid helium circuit piping is designed for 60 psig (or psia) under vacuum which is safely above the design MAWP of 2.5 bar (37.5 psi) of the 325 MHz cavity and helium vessel being tested. All the pipes are designed to meet the requirements of ASME process piping code B31.3 [3]. The pipe descriptions and their operating parameters are listed in Table 1.

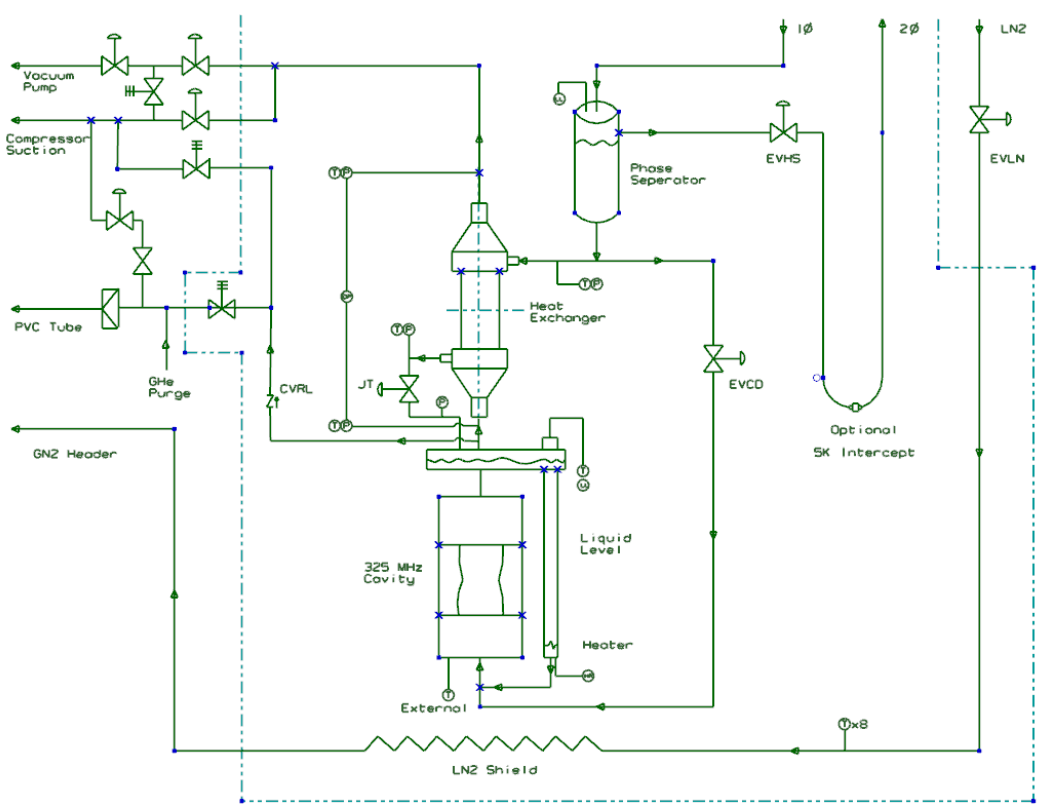

FIGURE 2. Flow schematic

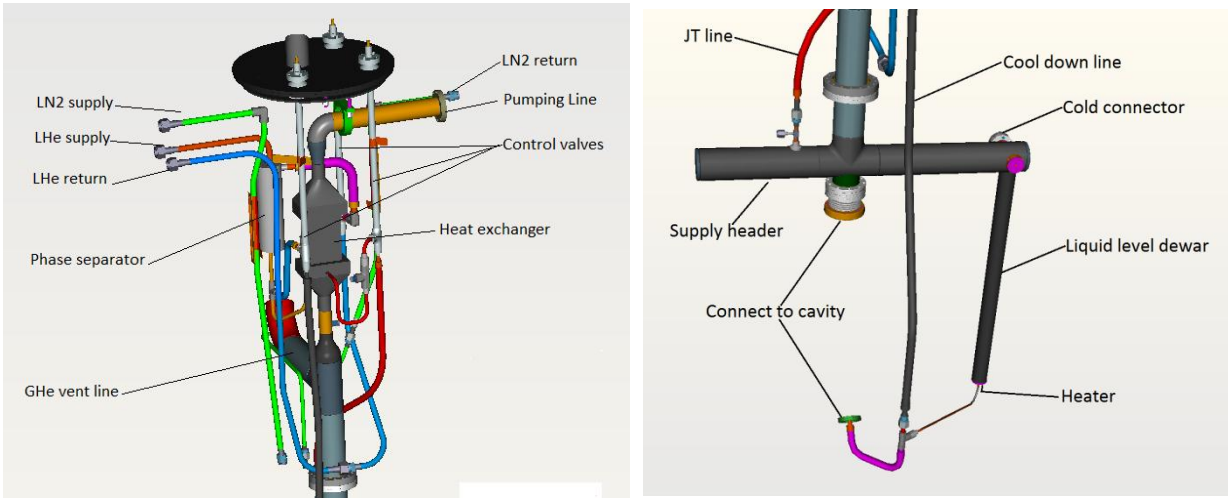

(a) (b)

FIGURE 3. (a) Internal piping top assembly, (b) Internal piping bottom assembly.

TOP HAT DESIGN

The function of the top hat is to contain the insulating vacuum, internal piping, instrumentation lines, thermal shield, and multi-layer insulation (MLI). In order to accommodate more internal piping lines due to 2K conversion from existing HINS spoke resonator test cryostat, the outer can diameter is increased from 18" to 20". The top hat is considered a vacuum vessel as an externally pressurized vessel with 1 atmosphere external pressure. The outer can along with its top plate is designed to meet the requirements of the ASME boiler and pressure vessel code, section VIII, Divisions 1 and 2. The interfaces to the MDB cryogenic distribution system requires three openings in the top hat to connect: 1) east jacket for the liquid nitrogen return and the sub atmospheric helium return, 2) west jacket for the 2-phase helium return, the 1-phase helium supply and the liquid nitrogen supply, and 3) a relief vacuum jacket [4]. It becomes impossible to have one-piece cylinder to install all the pipe lines due to these vacuum jackets extended out in three different directions. The reinforcement requirements are also increased because these large openings are close to the edge. As a result, the top hat outer can is fabricated from two rolled stainless steel plates with a thickness of 0.25". The longitudinal seam welds are single-welded butt joints with backing strips. Instrumentation wires travel through ¼" tubes to the 6-port block on the top plate for the temperature and pressure

TABLE 1. Cryogenic piping description and summary

Description	Fluid	OD (in)	ID (in)	P design (psi)	T (approx.)
LHe supply line	LHe	0.75	0.652	60	4.5 K
HX SC[1] Inlet	LHe	0.5	0.402	60	4.5 K
HX SC[1] Outlet	LHe	0.5	0.402	60	2.2 K
LHe return line	LHe	0.75	0.652	60	4.5 K
GHe vent line	GHe	3.5	3.26	60	4.5 K
LHe cooldown	LHe	0.5	0.402	60	4.5 K
HX VLP[2] Inlet	GHe	1.67	1.452	60	1.8 K
HX VLP[2] Outlet	GHe	2.375	2.157	60	2.0 K
Phase Separator	LHe	3.25	3.12	60	4.5K
Liquid Level Dewar	LHe	2.0	1.87	60	2.0K
LHe Supply Header	LHe	5.563	5.295	60	2.0 K
LN2 supply and return lines	LN2	0.75	0.652	80	80 K
LN2 extrusions	LN2	1.50	1.25	80	80 K

[1]HX SC = Heat exchanger super critical
[2]HX VLP = Heat exchanger very low pressure

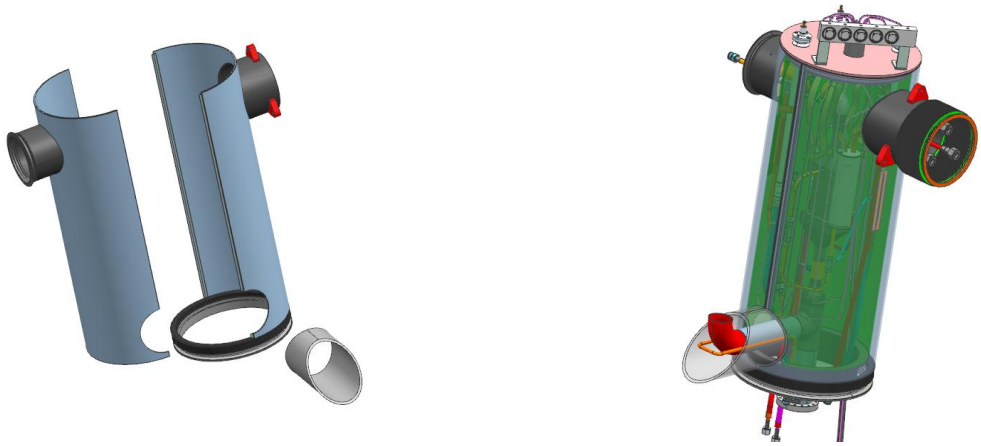

FIGURE 4. Top hat. (Left) Before weld. (Right) After assembled.

measurements. The thermal shield also has two 1/8" OFE copper rolled plates welded together after the internal piping lines are assembled. The thermal shield is mechanically connected to the cryostat vacuum vessel shield. The 80K liquid nitrogen lines are intercepted to the thermal shield. There are 60 layers of MLI between thermal shield and outer can. Helium lines have also 60 layers of MLI while nitrogen lines have 30 layers of MLI.

TRANSFER LINES

The existing test cryostat has three U-shaped rigid pipe transfer lines with bayonets in both ends. Every time disconnection is needed the U-shaped rigid pipes have to be lifted 2 feet high. Since the new top hat is much taller than the existing one, there is ceiling limit and safety concerns. The new transfer lines adopt HTS style flexible hose stinger design. Each line consists of two flex hoses (3/4" hose inserted into 2-1/2" hose). There are 60 layers of MLI between these two flex hoses. Bayonets have 15 to 1 layer tapered MLI. One ends of the flexible hoses have male bayonets that interface with the Fermi style female bayonets in the existing bayonet feed can. The other ends of the outer flexible hoses are pre-welded to a plate then welded a vacuum jacket weldment. This weldment is connected to the edge welded flex metal bellows by V-band flanges. The inner flex hoses connect to internal pipes with metal gasket face seal connectors which allow easy assemble and disassemble. Three tie rods are added in both ends of the bellows to prevent collapse. Transfer lines are sized for ease of insertion and removal from the bayonet feed can during cool-down and warm up, respectively.

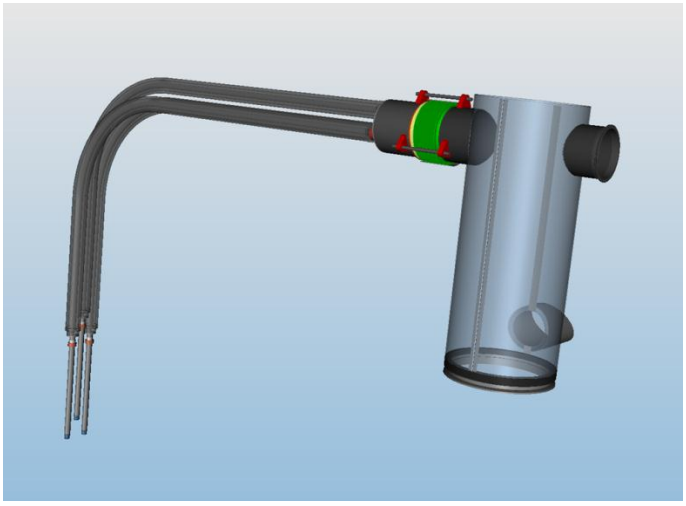

FIGURE 5. Flexible transfer lines

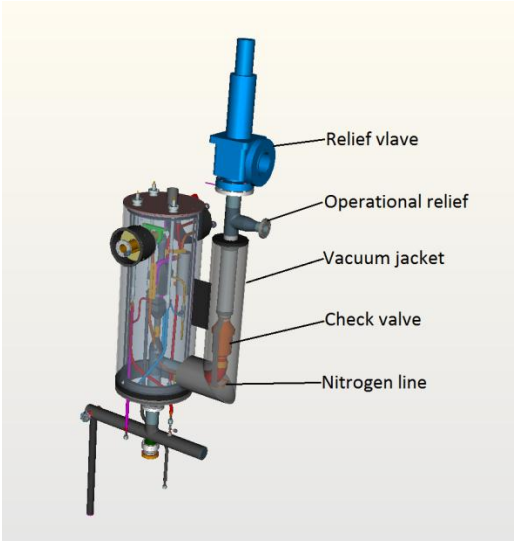

FIGURE 6. Pressure relief line

PRESSURE RELIEF SYSTEM

The test cryostat piping system contains a primary certified relief valve on the helium system sized for the worst case release occurring during a loss of cavity vacuum accident. The valve used is a Leser Series 526 flanged safety relief valve and was certified to relieve at 10 psig. It is modified again to relieve at 15 psig for 2K testing. There is a smaller relief installed on the branch connection just below the main relief as an operational relief which opens at 5 psig. A check valve is installed at about 20K point of relief line to avoid thermo- acoustic oscillation. The relief line is 3 inch pipe branched off from the pumping line with 8 inch vacuum jacket. The Nitrogen line is routed in the bottom part of the relief line to provide 80K intercept. 60 layers of MLI are placed in the relief line vacuum jacket.

STATUS AND PLAN

The internal piping system, top hat, relief line and flexible transfer lines were built by PHPK Technologies, and delivered to Fermilab in September 2012. The existing top hat along with its piping was removed. The new one has been installed into the test cryostat in MDB. The helium supply header has been modified due to the cryomodule configuration change. A foot-high pedestal was added under the vacuum vessel to facilitate the power coupler installation. Once the final assembly and cryogenic distribution system connection completed, the test cryostat is ready to test the first SSR1 325 MHz cavity in 2K mode.

ACKNOWLEDGMENTS

This work is supported by the United States Department of Energy under contract number DE-AC02-07CH11359.

REFERENCES

1. T. Nicol,et al, “Cryomodule Design for 325 MHz Superconducting Single Spoke Cavities and Solenoids”, Proceedings of 2011 IPAC, New York, NY, USA.
2. T. Nicol, “325 MHz Cavity Test Cryostat 2K Conversion Functional Requirement Specification”, May 2011, Fermilab, Batavia, USA.
3. M. Chen, “325 MHz Cavity Test Cryostat 2K Conversion Internal Piping System Relief Engineering Note for Testing in MDB”, September, 2011, Fermilab, Batavia, USA.
4. B. Hansen, SCTC 2K Upgrade Cryogenic Interface Requirements.