FERMILAB-CONF-12-629-APC

PHASE AND FREQUENCY LOCKED MAGNETRON*

M. Neubauer#, A. Dudas, R. Sah, Muons, Inc. Batavia, IL, USA
A. Moretti, M. Popovic, Fermilab, Batavia, IL, USA

Abstract

Phase and frequency locked magnetrons have many important uses from phased array ground penetrating radars to SRF sources. We report on the recent progress in making such a magnetron. The ferrite/garnet material has passed bakeout and outgassing tests with outgassing rates well below the requirements. The magnetic field requirements for adjusting the frequency by changing the microwave properties of the ferrite/garnet have been determined. The design of the anode structure with ferrites, magnetic shielding, and magnetic bias has been completed for a low power test. We report on the design status.

Muons, Inc. has negotiated a contract with a manufacturing firm, L-3 Electron Devices California Tube Laboratory, Inc., to be the Manufacturing Partner for the commercialization of this technology, and support for these Phase II efforts.

INTRODUCTION

Determination and selection of the appropriate ferrite / garnet material for use in a phase and frequency locked magnetron of this type was discussed previously [1]. The optimum material is one that has a high loss at the frequency of the next nearest mode, and lowest loss at the operating mode.

Previous work by G. Bush [2] helped in the design of a suitable test fixture. However, unlike the more direct tests performed by Bush, the DC biasing magnetic field from the magnetron (1400–2000 gauss) also had to be considered. Considerable design and modeling time was spent on not only shielding the ferrite from the magnetron field, but also preventing the effects of the ferrite from distorting the magnetron field in the interaction (beam) region of the magnetron.

DESIGN ISSUES / REQUIREMENTS

Due to its permeability, introduction of the ferrite material in the walls of the magnetron cavity distorts the axial magnetron field throughout the cavity region. This is especially critical in the interaction region between the cathode surface and the vane tips of the cavities. In discussions with the magnetron manufacturer [3] design limits were set for the axial and radial variation of the magnetic field within this interaction region.

- Total axial field variation within the interaction region should not exceed 15%. ($\Delta B_z \leq 15\%$)
- Radial field variation within the interaction region should not exceed 6% of the maximum axial field value. ($\Delta Br \leq 6\%$).

Similarly, the axial field of the magnetron cannot be permitted to saturate the ferrite control rods, as then they are no longer controllable via magnetic control circuits.

Introduction of ferrite rods at the cavity walls also adversely affects the Q of the magnetron cavities.

Lastly, the goal of the design is to provide at least 10% frequency adjustability of the magnetron operating frequency, and individual cavity control for phase stability via symmetry breaking. For phase stability the theory is that symmetry breaking of the "free-wheeling" modes will produce more uniform interacting electric fields and therefore spoke uniformity in the time domain.

MAGNETIC DESIGN

To meet the requirements listed above it was necessary to introduce magnetic shielding into the magnetron environment. The figure below shows the major elements of our design for low power microwave tests in a test solenoid.

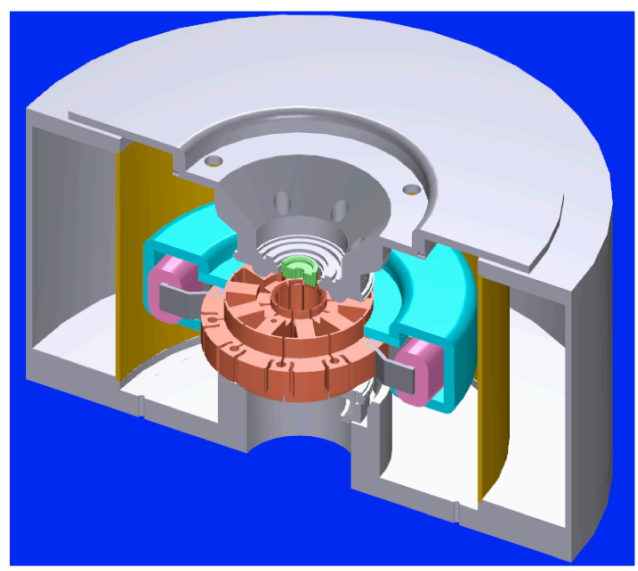

Figure 1: Cutaway view of the magnetron cavity, shielding can, control coils, test solenoid and pole pieces for the low power microwave tests.

Magnetic Shielding

Many design iterations were conducted to determine the shielding can design, shape, and location necessary to meet the design criteria listed above. The size, position, and shape of the ferrite rods were varied as well. Geometries were drawn in a 3D CAD program and exported to the magnetostatic solver in ANSYS for simulation.

The following figures show ANSYS graphics in which a 36° slice of the model pictured in Figure 1 is simulated.

*Work supported by DOE STTR grant DE-SC00002766.
#Mike@muonsinc.com

Copyright © 2012 by IEEE – cc Creative Commons Attribution 3.0 (CC BY 3.0) — cc Creative Commons Attribution 3.0 (CC BY 3.0)

Operated by Fermi Research Alliance, LLC under Contract No. De-AC02-07CH11359 with the United States Department of Energy.

(36° represents the angular extent of a single cavity of the 10 cavity magnetron.)

The magnetron cavity height is ~1.9 inches, but the ferrite rods are only 2 cm (~0.79") in height. Making the rods shorter has two benefits; (1) the magnetic field linking the interaction region is distorted less, and (2) the shielding can is move further from the cathode and output pole pieces of the magnetron. This reduces the field intensity in both the can and the pole pieces.

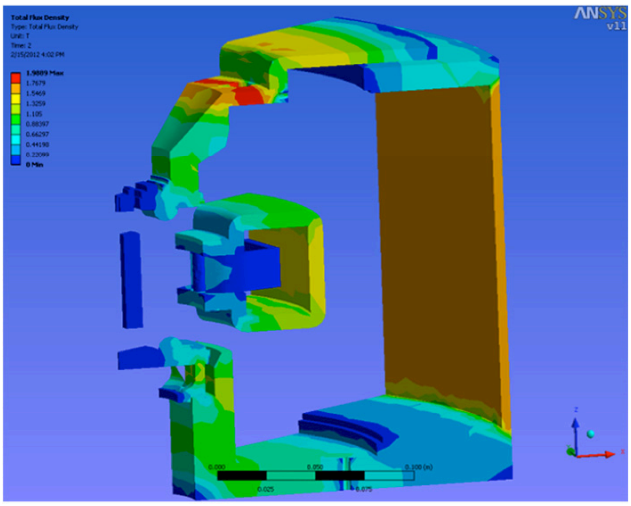

Figure 2: ANSYS model for 36° shows the interaction region, shielding can, control coil pole pieces, and ferrite rod. (The cavity is not part of the magnetostatic model).

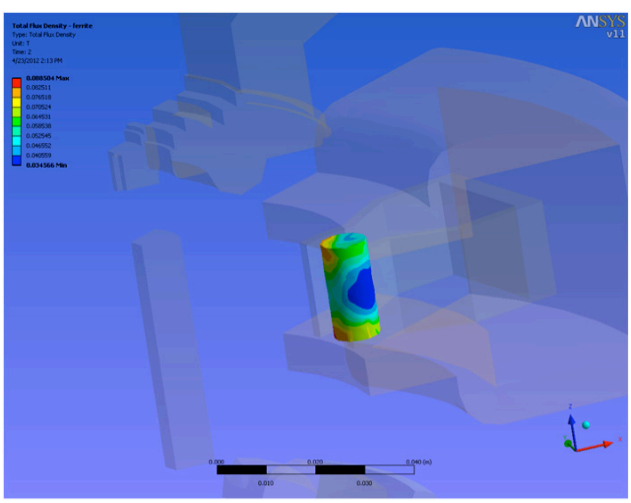

Figure 3: Close-up view showing the field strength in a 0.375" diameter ferrite rod due to the magnetron's axial field.

Recent designs and simulation results indicate that for an interaction region B_z~1725 g, the ΔB_z is between 10% and 11%, the ΔB_r is between 5% and 5.5%, and the maximum field in the ferrite is ~800 gauss. These values meet the requirements.

For one of the ferrite materials of interest (Transtech G-810) the Magnetization Saturation is ~800 gauss. However, as Figure 3 shows, the field in the ferrite rod is far from uniform, and only small portions of the rod have applied field (due to the magnetron field) close to the Magnetization Saturation value. The second material of interest (Transtech G-113) has a Magnetization Saturation of ~1780 gauss.

Control Coils

The magnetic properties of the individual ferrite rods can be manipulated by applying a transverse magnetic field across the ferrite. The better the uniformity of the applied control field, the better will be the control of its magnetic properties. The design of the pole pieces was performed using Poisson, as shown in the following figure.

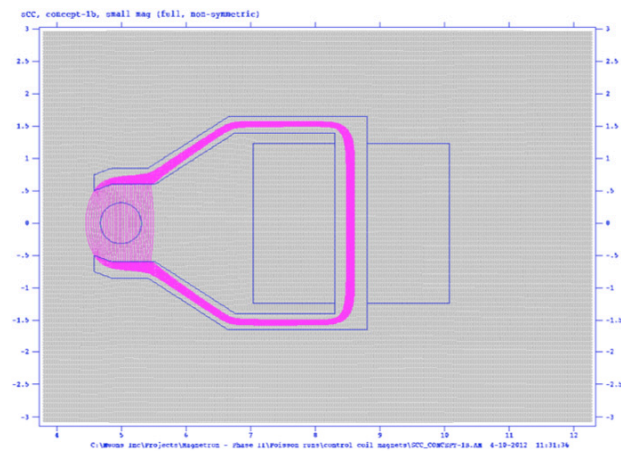

Figure 4: Poisson output graphic showing the control coil pole pieces, control coil region, and the portion of the fields which intersect the ferrite rod.

The result of carefully shaping and positioning the pole pieces yields a 96% field uniformity radially across the ferrite. With 775 amp-turns required to produce a field of ~600 gauss across the ferrite rod.

RF Calculations (Half Symmetry Without Cathode)

In order to simultaneously meet the design requirement of 10% frequency adjustability, keep the magnetron magnetic field as low as possible in the ferrite rods, and not radically change the cavity frequencies, it is necessary to make trade-offs in the size and position of the ferrite rods within the cavities. Comsol was used to model the effects on the microwave cavity structure for a number of these various options.

Because it was necessary to reduce the ferrite rods height to less than the full cavity height, due to the shielding considerations mentioned earlier, it will be necessary to have ferrite rods in all ten cavities of the structure. With the control coil and pole piece design discussed above there is ample room to have each cavity independently controlled by a control coil.

The figures below show a Comsol result for the electric field pattern in a cavity structure where the ferrite rods are fully behind the outer cavity wall, and joined to the cavity

Copyright © 2012 by IEEE – cc Creative Commons Attribution 3.0 (CC BY 3.0) — cc Creative Commons Attribution 3.0 (CC BY 3.0)

ISBN 978-3-95450-115-1

via a radial slot. As the rods are moved radially outward they can be better shielded by the pole pieces of the shielding can, however at the same time the cavity frequency varies further from the design frequency. This can to some extent be compensated for by varying the length of the vanes by reducing the outer radius of the cavity wall. A parameterization study is underway.

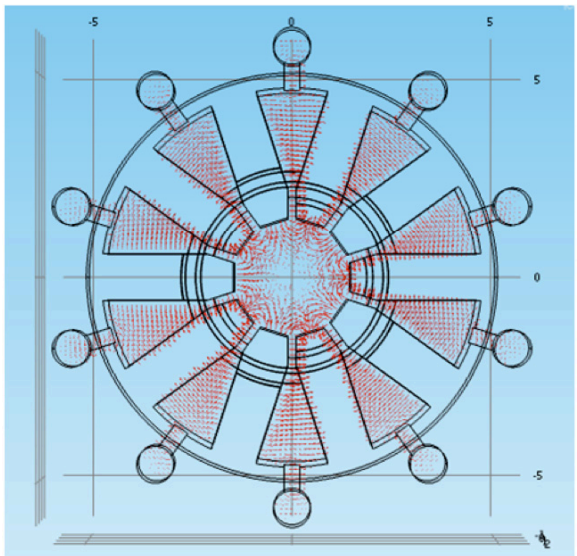

Figure 5: Comsol result showing the fields in the magnetron cavities with ferrite rods.

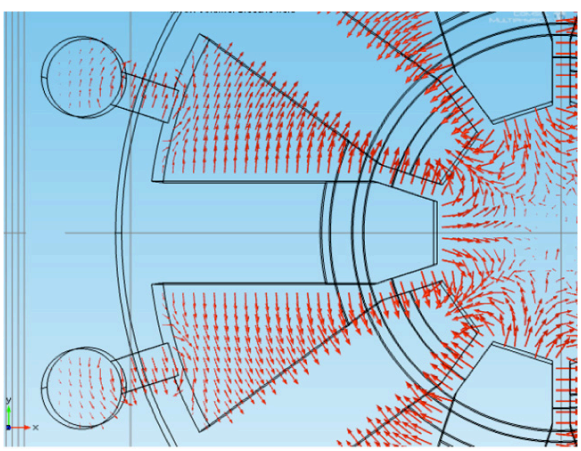

Figure 6: Close-up of Figure 5.

In Figure 7 below, the uniformity of the field in the interaction region is shown for 2 cm high ferrites in a 4 cm high cell.

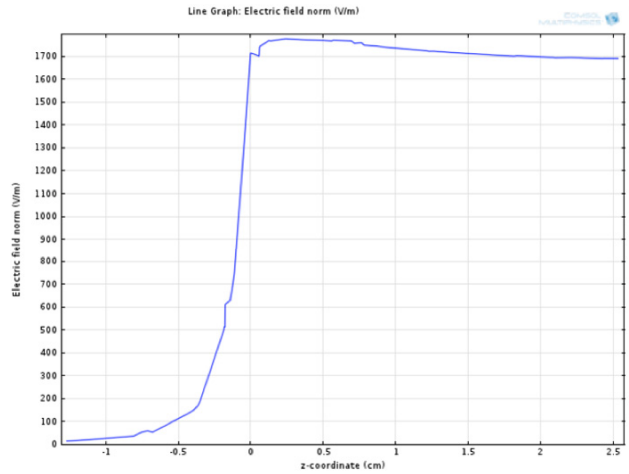

Figure 7: Shows the Electric Field uniformity as a function of radius for the model in the figures above.

Next Steps

With the shielding and cavity design almost complete, the next steps will be to complete the piece part drawings and fabricate the components for the low power microwave experiments in the test solenoid. The test plan is to completely characterize the contribution of the ferrite material to the Q measurements of the cavity. This will be done without the cathode in place. The optimized magnetic shielding for the ferrite rods will be utilized as well as tuning coils for the ferrites. Measurements of Q, f_o, and competing modes will be made to compare with the RF model. Once these measurements are made, the final "hot test" magnetron design can be determined.

CONCLUSIONS

Significant progress has been made in determining a workable design for a phase and frequency locked magnetron using magnetically controlled ferrites. The ferrite materials have been determined, and shielding has been designed that meets the dual requirements of the magnetron interaction region and prevention of ferrite saturation.

Parts for a low power microwave test in a solenoid are currently on the drawing board and are about to be fabricated. It is expected that the microwave testing will take place during the summer months.

REFERENCES

[1] M. Neubauer, et. al., "Phase and Frequency Locked Magnetrons for SRF Sources," PAC11.

[2] G. Bush, "Modification of the complex permeability of garnet and spinel ferrites by application of a static magnetic field", J. Appl. Physics, 64(10), 15 November 1988. Pp 5653-5655.

[3] private communication from Ron Lentz, L3 Communications – Electron Devices, California Tube Lab.

Copyright © 2012 by IEEE – cc Creative Commons Attribution 3.0 (CC BY 3.0) — cc Creative Commons Attribution 3.0 (CC BY 3.0)