PET-TOF study of Silicon Photomultipliers with DRS4 Readout.

A. Ronzhin[a], S. Los[a], M. Martens[a], P. Murat[a], E. Ramberg[a], H. Kim[b], C.-T. Chen[b], C.-M. Kao[b], K. Niessen[c], A. Zatserklyaniy[d] , M. Mazzillo[e], B. Carbone[e], G. Condorelli[e], G. Fallica[e], A. Piana[e], D. Sanfilippo[e], G. Valvo[e], S. Ritt[f]

[a]*Fermi National Accelerator Laboratory, Batavia, IL 60510, USA,*

[b]*University of Chicago, Chicago, IL, USA,*

[c]*SUNY Buffalo, NY, USA,*

[d]*University of California Santa Cruz, Santa Cruz, CA,USA,*

[e]*STMicroelectronics, Catania, 95121, Italy*

[f]*Paul Scherrer Institute, Villigen, Switzerland*

Abstract

Our goal is to develop a system with 100 picosecond time resolution for time of flight positron emission tomography [PET-TOF] using silicon photomultipliers (SiPMs). We have obtained a coincidence time resolution of 188 ps FWHM with two LYSO crystals (3x3x15 mm^3) coupled to SiPMs and irradiated with ^{22}Na source. The best time resolution was obtained with the signal trimmed by a clipping capacitance. We used a fast waveform digitizer to readout the SiPMs.

I. Introduction

The principle of positron emission tomography (PET) has been well described. The time of flight (TOF) method allows much better rejection of scattered photons and random coincidence events in PET. Currently there is a lot of activity applying silicon photomultipliers (SiPMs) for PET-TOF, because of very fast SiPM timing parameters [1]. A goal was to test a simple method of improving of the time resolution of a PET-TOF detector by shortening the SiPM signal. We used the DRS4 [2], a fast waveform digitizer, for the readout. The DRS4 is less expensive than the Ortec system we previously used [1], and it does not require additional electronics for pulse height analysis. For a given photon detector, the time resolution depends mainly on two parameters: the signal rise time, which should be as short as possible, and the signal-to-noise ratio. We present below a simple method of improving PET-TOF resolution, by shortening the pulse rise time with a clipping capacitance. Even with the 200 ps sampling time of the DRS4 we obtain a good time resolution. We measured timing parameters of the SiPMs with a PiLas laser before using them in the TOF-PET setup.

II. Initial results

We tested two types of SiPMs: one produced by STMicroelectronics (STM), Italy, and the other (MPPC) by Hamamatsu, Japan. The tests were done both with laser and with scintillation light in LYSO crystals from positron annihilation.

Some parameters of the SiPMs are given in Table 1.

Table 1.

SiPMs	Area, mm^2	PDE, %, 430 nm	BV, V	OV, V	Gain	Pixels amount	Pixel size, um^2	SPTR, ps
STM	3.5x3.5	20	28	4	$\sim 10^6$	~4,900	50x50	100
MPPC	3x3	45	70	2	$\sim 10^6$	3,600	50x50	110

PDE is the photon detection efficiency, BV is the bias voltage, OV is the overvoltage, and SPTR is the single photoelectron time resolution. The SPTR results were obtained with PiLas laser [1].

A simple circuit was used to shorten the SiPMs pulses by a 10 pF "clipping" capacitance (Fig. 1).The bias voltage on the SiPMs was provided by a Keithley 2410 power supply. The SiPMs were operated at room temperature.

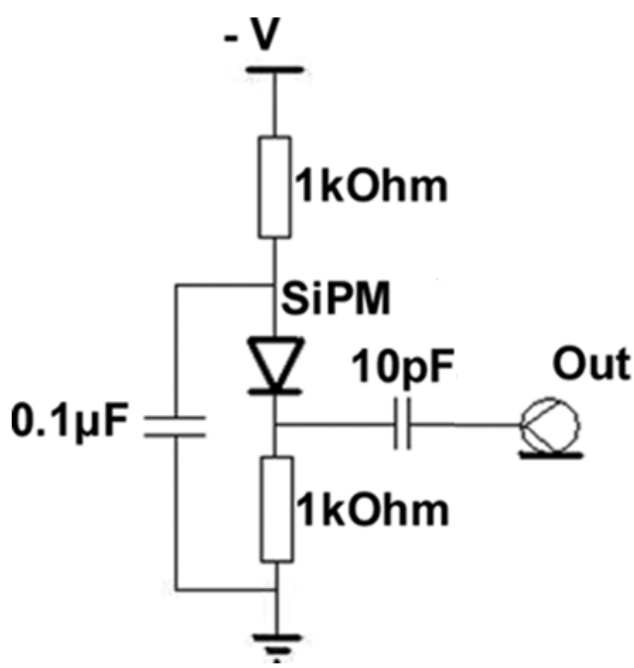

Fig. 1. Schematic representation of the SiPM biasing and "clipping" circuit.

Fig. 2 shows an external view of the TOF-PET setup.

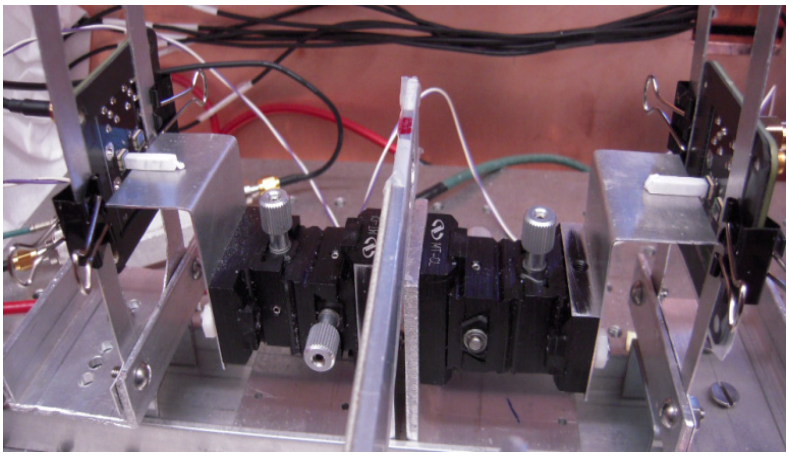

Fig. 2. External view of the TOF-PET setup. SiPMs circuit boards with LYSO crystals are placed on opposite sides of the ^{22}Na source.

Two LYSO crystals (3 x 3 x 15 mm^3) coupled to SiPMs with optical grease (BC 630, refractive index n = 1.47) were placed on opposite sides of the radioactive positron source, ^{22}Na (activity = 50 μCi) at distances ranging from 10 cm – 20 cm. The other sides of the crystals were wrapped with a few layers of Teflon tape. The SiPM output signals were split, discriminated and put in coincidence to provide a trigger signal for the DRS4, while the waveform of the raw signal was recorded (Fig.3). Data were taken with and without the 10 pF clipping capacitance.

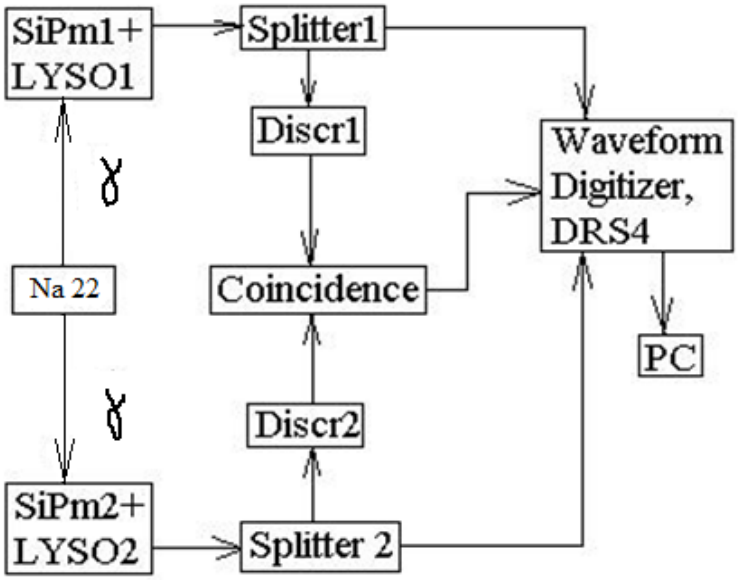

Fig. 3. Schematic diagram of the readout in the TOF-PET setup with the DRS4 readout.

Both the LYSO light pulse and the SiPM signal have fast rise times (~1 ns) with a much slower falling tail (a few tens of ns). The convolution of these two distributions should lead to a much longer rise time of the output signal (~ 20 ns, from 10% - 90% of the peak pulse height), as experimentally observed, Fig. 4. The increase of the rise time is due to the long tail of the SiPM signals. The use of a clipping capacitance gives the resulting signals a sharp leading edge (~3.7 ns), and removes the long tail. We used a digital sampling analyser DSA71254B, with 50 Gs/s sampling, 20 ps per sample, and bandwidth 12.5 GHz to take the signal traces in the case (Fig. 4).

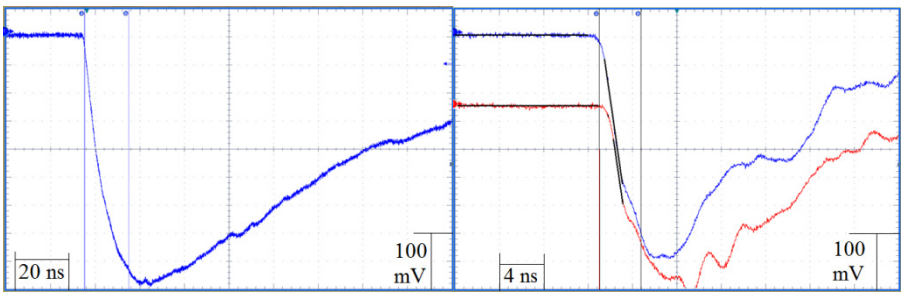

Fig. 4. Left - trace of the MPPC signal. Horizontal scale: 20 ns/div. The SiPM is illuminated by the light from LYSO crystal, irradiated by ^{22}Na. There is no clipping capacitance. Right - traces of two MPPCs signals (with 10 pF clipping capacitance and an Ortec VT120C amplifier). Horizontal scale: 4 ns/div. The two MPPCs are illuminated by the light from LYSO crystals irradiated by ^{22}Na. The trigger signal is generated by the coincidence of these two signals.

We now present results obtained with the LYSO crystals irradiated by ^{22}Na, and the MPPCs, 2 Volts of OV, with a clipping capacitance, and a VT120C amplifier with the DRS4 waveform digitizer. The signal pulse heights were obtained by integrating the charge of the DRS4 cells. A typical waveform corresponding to the MPPC output signal is shown in Fig. 5. 90% of the signal charge is contained in ~40 ns (200 cells).

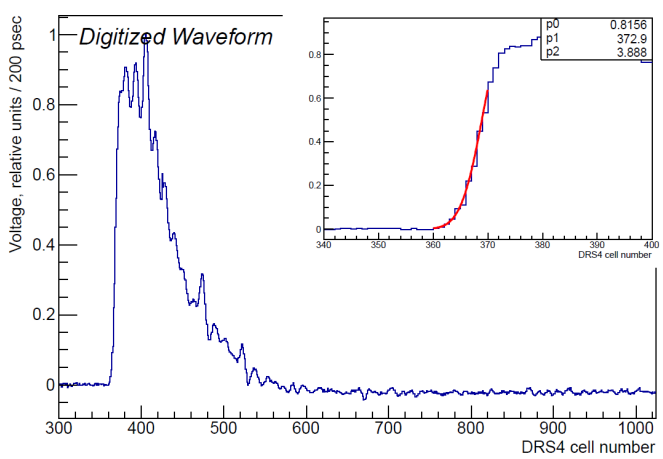

Fig. 5. A typical DRS4 waveform corresponding to the MPPC output signal.

Fig. 6 shows distributions of the integrated charge for the two channels.

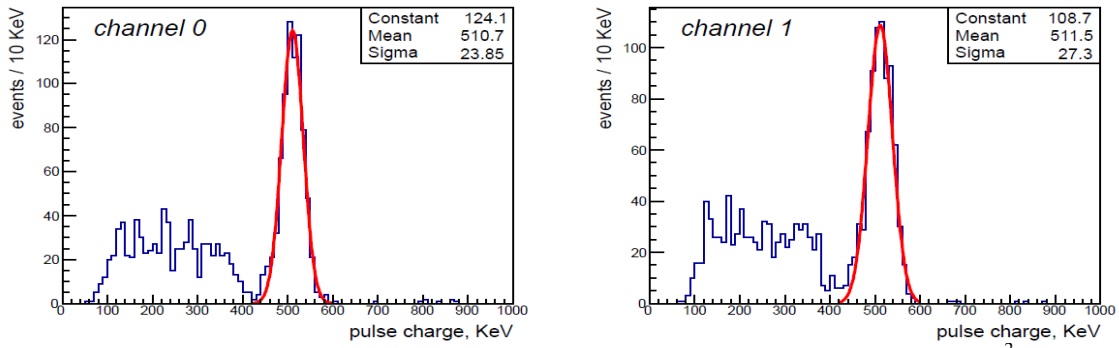

Fig. 6. Example of pulse height distributions. The conditions were: MPPCs, 3x3 mm^2; LYSO crystals, 3x3x15 mm^3; VT120C amplifier, ^{22}Na radioactive source. The positron annihilation peak resolution is < 12% (FWHM).

The peaks corresponding to the ^{22}Na positrons annihilation are clearly seen. We normalized the mean peak values to the 511 keV energy deposited by photons. The peaks were approximated by Gaussian distributions (FWHM < 12%). We did not correct for SiPM non-linearity, estimated to be < 15%. The signals below 400 keV are attributed to Compton scattered photons. Events in the 511 keV peak were used for the TOF analysis. The pulse leading edge, up to 70% of the peak height, is well fit with a Gaussian function, as shown in Fig.5 (inset). The typical σ_T of the Gaussian fit is ~1 ns. Using the fit parameters we found the time on the leading edge corresponding to 10% of the signal amplitude height:

$$T_{(i=1,2)} = 0.1 \exp[-0.5(t - T_{max})^2/\sigma^2_T],$$

where T_{max} is the time of the signal amplitude maximum, and σ_T is sigma of the Gaussian fit. T_1 and T_2 are the "time stamps" for the signals in the channels 0, 1. The distribution of the χ^2 of the Gaussian fit of the leading edge shown in Fig. 7.

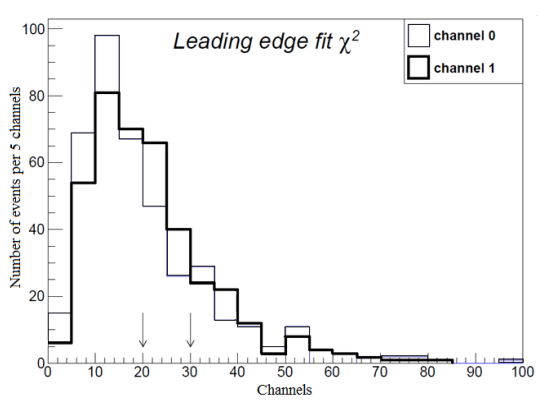

Fig.7. χ^2 distribution of the Gaussian fit of the leading edge. The applied cuts are shown by arrows.

Fig.8 shows three distributions of the time difference T_1-T_2, with different cuts on the χ^2 of the fit to the leading edge. We again used Gaussians to fit the obtained time distributions. Fig. 8 (left) shows the time distribution with FWHM = 240 ps, σ = 102 ps, without any χ^2 cut. Next, events with $\chi^2 < 30$ were selected (Fig. 8, central). This results in a time resolution, σ = 80 ps (FWHM = 188 ps). The efficiency of that χ^2 selection is ~ 70%. Tightening the cut to $\chi^2 < 20$ results in σ =75 ps, FWHM = 175 ps; the efficiency is then 40% (Fig. 8, right). The applied χ^2 cuts are shown by arrows in the Fig. 8.

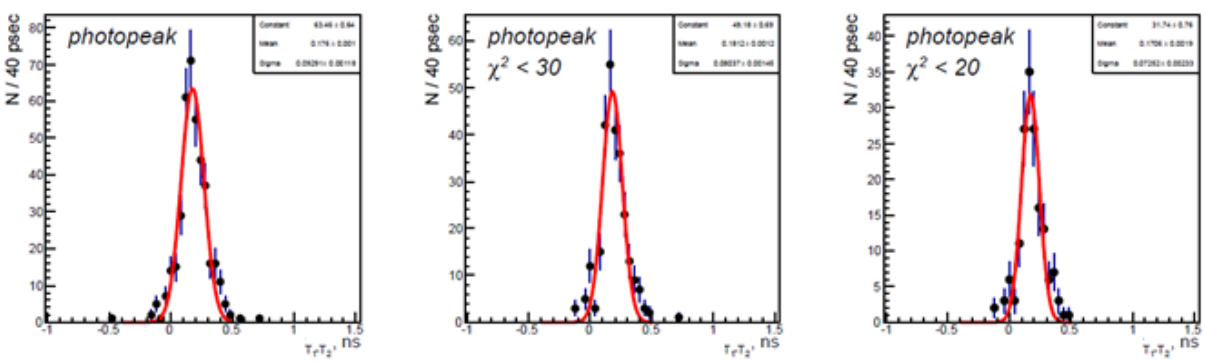

Fig. 8. Distributions of the T1-T2 time difference. Left picture presents T1-T2 without any χ^2 cuts, FWHM = 240 ps; central - $\chi^2 < 30$, FWHM = 188 ps; right - $\chi^2 < 20$, FWHM = 175 ps, see text.

The time resolution obtained for MPPCs without the clipping capacitance was about 1.4 times larger under the same conditions. For the STMs our results are ~40% worse due to the lower photon detection efficiency. More recent STMs have an improved photon detection efficiency and SPTR.

III. Summary

The LYSO light pulse has an exponential decay constant of 40 ns. The convolution of that with the SiPM single photon response results in the SiPM output pulse having a leading edge of about 20 ns for 10%-90% of the signal amplitude. Shortening the SiPM signal, with a clipping capacitance followed by an amplifier, results in a faster rise time and an improvement in the time resolution. Among the amplifiers we tested (Ortec, Phillips, etc.) the best time resolution was obtained with the Ortec VT120C. We found that the pulse height resolution does not get worse when clipping the SiPM signal. The best time resolution we obtained, between two 511 keV γ-rays with LYSO crystals and SiPMs, was 188 (175) ps FWHM with 70% (40%) efficiency. The observed energy resolution is less than 12% FWHM. The described approach combined with strip line readout [3] could be a cost effective way to construct a full scale clinical TOF-PET device.

REFERENCES

1. Anatoly Ronzhin, Mike Albrow, Karen Byrum, Marcel Demarteau, Sergey Los, Edward May, Erik Ramberg, Jerry Vav'ra, Andrey Zatserklyaniy. Test of timing properties of silicon photomultipliers. Nuclear Instruments and Methods. A 616 (2010) 38-44.

2. S. Ritt. Design and Performance of the 6 GHz Waveform Digitizing Chip DRS4. http://drs.web.psi.ch/docs/nss08.pdf

3. Heejong Kim, Chin-Tu Chen, Anatoly Ronzhin, Erik Ramberg, Sergey Los, Pavel Murat, Stan Majewski, Henry Frisch, Chien-Min Kao. A Silicon Photomultiplier Signal Readout Using Transmission-line and Waveform Sampling for Positron Emission Tomography. Submitted to IEEE 2012 NSS MIC, Conference record 1025, 2012.