DESIGN OF SSR1 SPOKE RESONATORS FOR PXIE*

L. Ristori†, M. H. Awida , I. Gonin, , M. Merio, D. Passarelli, V. Yakovlev, Fermilab, Batavia, IL 60510, USA.

Abstract

The Project X Injector Experiment (PXIE) will be a prototype of the Project X front end [1] to validate the design concept and decrease technical risk. It contains one cryomodule with 8 SSR1 (single spoke resonators type-1) cavities which operate at 325 MHz with a geometrical beta of 0.2.

Prototypes of SSR1 cavities have been tested successfully at high gradients. With excellent results in hand, an order for ten bare SSR1 resonators of 2nd generation was placed with US industry.

A new design for the helium vessel was developed for these available resonators with the main goal of reducing the frequency sensitivity of the resonator to variations of helium pressure.

A new tuner was developed despite the good results of the first prototype due to the different behavior of the resonator in the new helium vessel. Other aspects of the tuning system were improved such as the maintainability of the tuner motor and piezoelectric actuators from outside the cryomodule.

INTRODUCTION

SSR1 was the first superconducting spoke resonator developed at FNAL for the High Intensity Neutrino Source (HINS) accelerator [2][3]. The optimization of SRF cavities for a pulsed machine such as HINS, focuses on mitigating the effects of Lorentz forces which dominate the behavior of the cavities.

Figure 1 : The mechanical design of SSR1 of 3rd generation. A transition ring couples the niobium cavity wall to the steel vessel wall and can be seen at the bottom. The bellows is visible at the top. The niobium components are rendered in dark grey, the stainless steel ones are rendered in light grey.

In a continuous wave (CW) machine, the largest perturbations for the cavities are caused by the fluctuations in pressure of the liquid helium bath.

The design of the helium vessel was improved to reduce considerably the sensitivity of the cavity to these fluctuations and meet the requirement of df/dp < |25| Hz/torr [4] (*f* is the cavity resonance frequency, *P* is helium pressure). The sensitivity of the first prototype in operational conditions was measured at -140 Hz/torr.

The improvement consisted in coupling the helium vessel with the end-wall of the resonator, adopting a bellows of optimal diameter, and adjusting the design appropriately producing a design of 3rd generation for SSR1 shown in Figure 1.

SENSITIVITY TO HELIUM PRESSURE

For cavities operating in CW regime that have small bandwidths (i.e. < 100 Hz), the sensitivity to helium pressure variations can be an issue. In order to mitigate this sensitivity, several means are typically used. These can be divided in active and passive methods.

Among the active methods, first of all one can over-couple the cavities in order to increase the bandwidth, this leads to input power overhead. Another approach is to utilize active frequency control compatible with beam acceleration. The stability of the helium bath pressure can be improved also so that the smaller fluctuations will generate smaller frequency shifts of the cavities. This can be achieved realistically only up to a certain level (e.g. ± 0.1 torr).

The passive approach is based on reducing the sensitivity of the cavities to helium pressure fluctuations, in other words decreasing the value of *df/dP*.

Methods for reducing df/dP of SRF cavities

There are several methods for reducing the value of df/dP for an SRF cavity. In order to understand the methodology, one should keep in mind that the frequency shifts in an SRF cavity are due to changes in its volume. Volume reductions in regions of high electric fields cause negative shifts whereas reductions in regions of high magnetic fields generate positive shifts.

The first and most simple approach is to reduce the volume changes in general (e.g. making the cavity more rigid). This is feasible up to a certain degree, deformations cannot be avoided completely. If this is not sufficient, another possibility is to control the deformations and cause a compensation of positive and negative contributes. This is typically done by experimenting with different systems of stiffeners and depends greatly on the type of cavity.

* Operated by Fermi Research Alliance, LLC under Contract No. DE-AC02-07CH11359 with the U.S. Department of Energy.
† email: leoristo@fnal.gov

Other ways of reducing df/dP involve for example adopting bellows of appropriate diameter in locations of high fields. The resultant force due to pressure differentials that the cavity sees at these locations will go with the square of the diameter of the bellows and can help in reducing net deformations and therefore df/dP.

The necessity of controlling the frequency of an SRF cavity produces a system where a region of the cavity is connected to a tuning system. This region is usually of high fields and subject to pressure differentials. The rigidity of this interface (tightly correlated with the stiffness of the tuning mechanism) will influence the amplitude of the deformations in this area and consequently the value of df/dP.

Application to SSR1

A systematic method, described in [5] was developed to characterize the df/dp of the cavity and indicate the design features that mostly influence it, allowing for instance to produce the design of the helium vessel avoiding a trial-error approach.

The final design for the SSR1 cavity which includes the helium vessel is shown in Figure 1. Among the several options investigated that produced satisfactory values for the df/dP, it was decided to adopt a coupling ring on top of the existing donut rib on one side and a bellows on the side devoted for tuning. The design of the helium vessel and the diameter of the bellows were adjusted to minimize df/dP.

The values of df/dP for this design were simulated for two extreme conditions of the boundary conditions, in reality the behavior will be somewhere in this range. The first case with the cavity free to move under the varying pressure, the second with a tuning system engaged and having infinite stiffness.

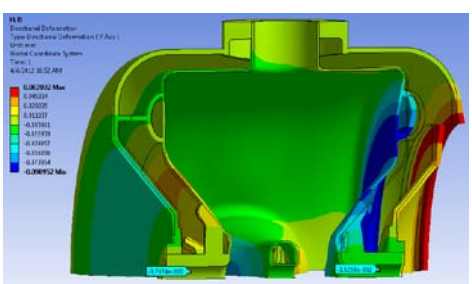

Figure 2 : Results of a coupled analysis to evaluate the df/dP of the proposed design. Despite the non-negligible deformations up to 90 microns (blue areas), the df/dP of the cavity results being close to zero in virtue of the aforementioned compensation approach.

MECHANICAL DESIGN

The helium vessel will be constructed of 316L stainless steel similarly to the prototype. Special attention was devoted to limiting the total weight of the assembly, the prototype weighed in excess of 400 lbs which was close to the load limit of several handling and lifting equipment.

The Fermilab ES&H manual requires that the cavity is rated at a maximum allowable working pressure (MAWP) following applicable sections of the ASME Boiler and Pressure Vessel code [6]. According to Chapter VIII, Division 2 (Design by Analysis), several finite element analyses were performed to define the MAWP of the cavity by guaranteeing the protection of the cavity against: plastic collapse, collapse from buckling, failure from cyclic loading and local failure. The requirement for this cavity is for the MAWP to be > 2 bar at room temperature and > 4 bar at cryogenic temperatures. All analyses produced results higher than the requirements. The results from two of these analyses are shown in Figure 3.

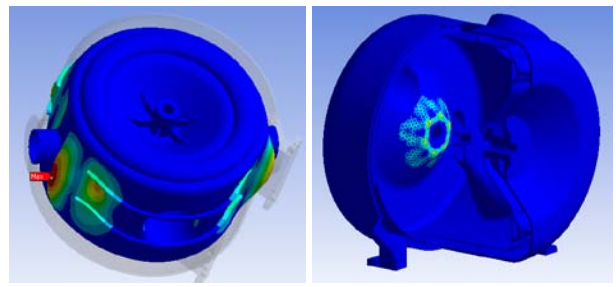

Figure 3 : Results of the buckling analysis (left) showing the area of failure next to one of the coupler ports and plastic collapse analysis (right) showing the area of failure at the base of the beam pipe ribs.

The transition ring is being developed and qualified at Argonne National Laboratory utilizing a furnace-brazed joint with oxygen-free electrolytic copper as described in [7]. This ring will be subject to axial loads that generate stresses in the brazed joint up to 500 psi due to differential thermal shrinkage and helium pressure.

A series of holes is present in the joint allowing the flow of liquid helium to the beam-pipe area and also facilitating future degreasing and chemistry operations.

These rings will be installed onto the existing resonators by means of electron-beam welds. Subsequently, during jacketing operations, the helium vessel will be connected to the rings by TIG welding.

TUNING SYSTEM

The tuning system for cavities of narrow bandwidths such as SSR1, typically integrate a coarse and a fine mechanism engaged in series. The adopted system utilizes a stepper-motor for the coarse adjustment placed in series with two piezo-electric actuators. The tuning range deemed sufficient to compensate for the cool-down uncertainties is estimated to be 50 kHz. In the event that a cavity must be detuned as a result of a malfunction the frequency needs to be shifted by at least 100 bandwidths which equals to about 10 kHz. The requirement for the coarse range was set by adopting arbitrarily a safety factor of 2.7. The maximum force required at the beam pipe is calculated taking into account that the spring constant of the end-wall is 30 kN/mm and its sensitivity is 540 kHz/mm.

The tuning scheme was developed keeping in mind several aspects. With the goals of limiting the forces required from the stepper-motor and limiting the stroke requirements for the piezoelectric actuators, the mechanical advantage for the stepper-motor was set to 6:1 while keeping the mechanical advantage of the piezos down at 2:1. This was done by interposing a 3:1 reduction between the piezos and the motor as can be seen in Figure 4.

Table 1 : Requirements for the tuning system

Parameter	Value
Coarse Frequency Range	135 kHz
Coarse frequency resolution	20 Hz
Max force at beam-pipe	7500 N
Fine frequency range	1 kHz
Stepper-motor max force	1250 N
Stepper-motor travel	6 mm
Piezo max force (each of 2)	1770 N
Piezo travel	15 µm

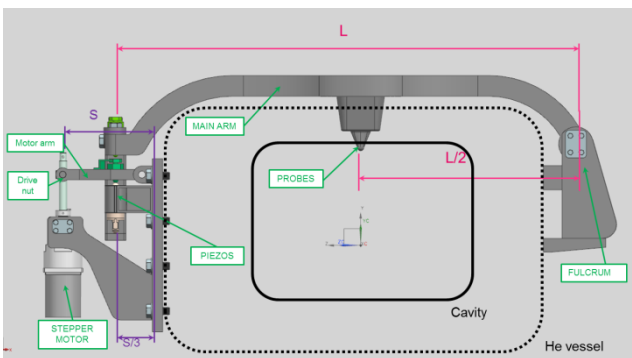

Figure 4 : SSR tuner scheme. The mechanical advantages are about 2:1 between piezos and probes, and about 3:1 between motor and piezos.

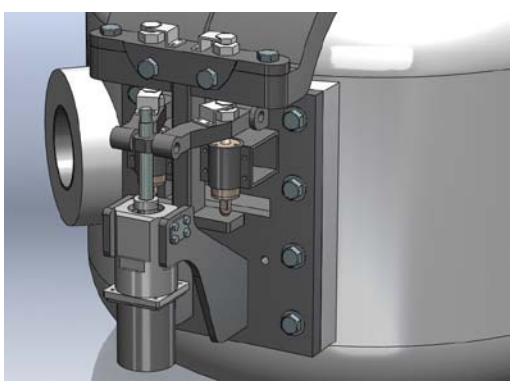

Figure 5 : The actuating elements of the tuning system.

A flexible joint (Figure 6) has been preferred over a cylindrical joint (Figure 4) for the main joint. Stick slip phenomena in this region could be an issue causing hysteresis problems. The joint has been optimized to have a high flexibility in the direction of the bending, a high stiffness in the transversal direction and infinite life. The radius of the notches and the minimum thickness of the joints have been studied in detail. Figure 6 shows the loads, constraints and stresses at the flexible joint when the displacement required at the beam pipe is 0.25mm (worst case).

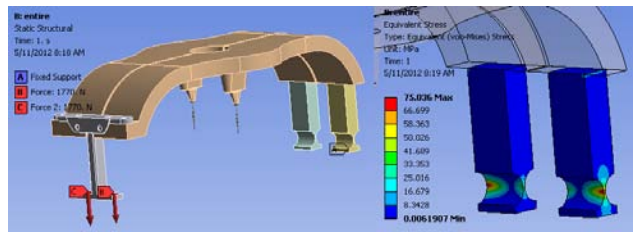

Figure 6 : Load case with F = 2 x 1770 N and springs mimicking the cavity at the probe ends (left) and stresses in the joint (right) topping at 75 MPa.

A particular design effort was dedicated to facilitate the access to all actuating devices of the tuning system from access ports on the vacuum vessel of the cryomodule. The sub-assembly that contains the stepper motor and the two piezoelectric cartridges (see Figure 5) can be removed, serviced and/or replaced in the event of a failure. The added benefit of moving the Piezo-electric actuators away from the beam is that their life expectancy is increased due to the lower radiation. Differential screw mechanisms are located in key areas to allow the adjustment after installation or the relief of loads in case of failure.

SUMMARY

A new design for the helium vessel of SSR1 was developed following a systematic approach and allowed the reduction of the sensitivity of the cavity to helium pressure variations. The Fermilab safety requirements for pressure vessels have been verified with a campaign of finite element analyses following the ASME guidelines.

The available resonators will be fitted with transition rings developed at ANL and will receive the new helium vessels.

The conceptual design of the tuning system is complete.

REFERENCES

[1] S. Nagaitsev, “Project X, new multi megawatt proton source at Fermilab”, Invited talk, PAC 2011, New York.

[2] L. Ristori et al., “Design, Fabrication and Testing of Single Spoke Resonators at Fermilab”, SRF2009, Berlin.

[3] R. Webber et al., “First high gradient test results of a dressed 325 MHz Superconducting Single Spoke Resonator at Fermilab”, LINAC10, Tsukuba.

[4] “Functional Requirement Specification for 325 MHz SSR1 Superconducting RF Cavities”, projectx-docdb.fnal.gov.

[5] D. Passarelli et al., “Pressure sensitivity characterization of superconducting spoke resonators”, this conference.

[6] go.asme.org/bpvc10.

[7] L. Ristori, W. Toter, “Development at ANL of a copper-brazed joint for the coupling of the niobium cavity end-wall to the stainless steel helium vessel in the Fermilab SSR1 resonator”, this conference.