MEASUREMENTS OF THE PERSISTENT CURRENT DECAY AND SNAPBACK EFFECT IN NB_3SN ACCELERATOR PROTOTYPE MAGNETS AT FERMILAB*

G.V. Velev#, G. Chlachidze, J. DiMarco, V.V. Kashikhin,
FNAL, Batavia, IL 60510, USA

Abstract

In recent years, Fermilab has been performing an intensive R&D program on Nb_3Sn accelerator magnets. This program has included dipole and quadrupole magnets for different programs and projects, including LARP and VLHC. A systematic study of the persistent current decay and snapback effect in the fields of these magnets was executed at the Fermilab Magnet Test Facility. The decay and snapback were measured under a range of conditions including variations of the current ramp parameters and flattop and injection plateau durations. This study has mostly focused on the dynamic behavior of the normal sextupole and dodecapole components in dipole and quadrupole magnets respectively. The paper summarizes the recent measurements and presents a comparison with previously measured NbTi magnets.

INTRODUCTION

The persistent current effects in the superconducting magnets [1] were observed for the first time in the Tevatron operation during the late 1980 runs. They were found to be accountable for the large chromaticity variation during the dwell at injection. Today, the persistent current effects play a significant role in the operation of any modern superconducting accelerators, especially LHC, due to their relatively large amplitudes and strong time dependence. Most of the time, the persistent current effects together with other effects that cause allowed multipoles of superconducting magnets to depend on time and current ramping are collectively referred as "dynamic effects".

Over the years, different complex correction algorithms were developed to control the change of the allowed multipole fields in the accelerator magnets [2-3]. These corrections are usually based on the magnetic measurements of a set of magnets. The complexity of these correction algorithms comes from the fact that the dynamic effects strongly depend on the magnet excitation history. Moreover, some of the changes in the magnetic field occur during a relatively short period of several seconds. A typical example is the fast field change, called snapback, occurs when the superconducting magnet is ramped up after a constant current plateau, like the injection porch in the collider operation.

Since 2003, we executed a program to investigate the decay and snapback effects in a sample of the production or R&D superconducting accelerator magnets measured at the Fermilab Magnet Test Facility (MTF). During this ongoing program we measured representatives of the Tevatron dipoles and all LHC interaction region (IR) quadrupoles built at Fermilab. These magnets are built with NbTi superconducting cable. Moreover, we measured all of the R&D dipoles and quadrupoles based on the Nb_3Sn superconductor. These sets of magnets include dipole models for VLHC [4], 1-m long quadrupole models, and subsequently the 3.7 m-long LQS quadrupole magnets. The latter were built as part of the US-LHC accelerator research program (LARP) as a demonstration of the Nb_3Sn technology for the luminosity upgrade of LHC.

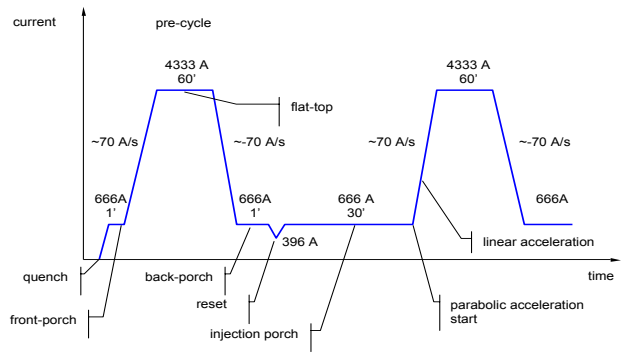

Figure 1: Example of the current profile simulating the Tevatron operation. The LHC profile has the similar structure.

In this paper, we compare the dynamic effects, focusing on decay and snapback, between different magnets based on NbTi and Nb_3Sn superconductors.

MAGNETIC FIELD MEASUREMENTS

The results in this paper are expressed in terms of harmonic coefficients defined in a series expansion given by

$$B_y + iB_x = B_{1,2}10^{-4}\sum_{n=1}^{\infty}(b_n + ia_n)\left(\frac{x+iy}{r_0}\right)^{n-1} \qquad (1)$$

where B_x and B_y in (1) are the field components in Cartesian coordinates, b_n and a_n are the 2n-pole normal and skew coefficients at the reference radius r_0 (B_1 and B_2 correspond to the main dipole and quadrupole fields). Different measurements utilize different r_0, which varies between 17 mm for the LHC IR quadrupoles to 25.4 mm for the Tevatron dipoles.

The magnetic measurements were performed at the Fermilab MTF. Magnets were tested at 1.9 K and 4.5 K; the tests on the Tevatron dipoles showed that the dynamic effects did not depend on the temperature.

* Work supported by Fermi Research Alliance, LLC, under contract No. DE-AC02-07CH11359 with the U.S. Department of Energy
# velev@fnal.gov

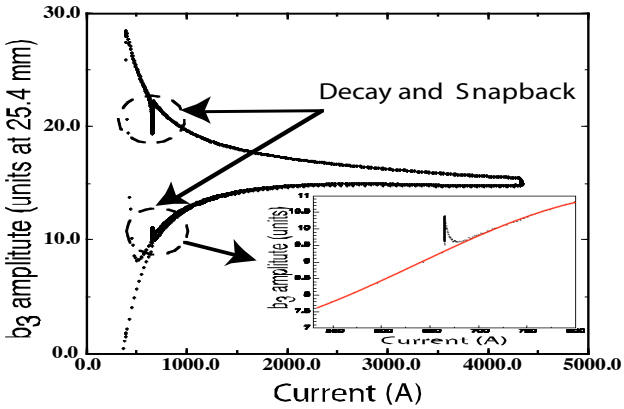

Figure 2: Hysteresis loop of the sextupole field component in the Tevatron dipoles. The decay and snapback effects are clearly seen.

Decay and Snapback in NbTi Magnets

Figure 1 shows a typical example of the Tevatron ramp profile. To suppress the effect from the previous magnet excitation, effect known as "history dependence", we used a long pre-cycle with flattop time set to 60 min. This time is needed to saturate the amount of field drift due to the previous excitations and simulates the real operation when the Tevatron was ramping down from the beam collision state and preparing for proton-antiproton injection.

Figure 2 shows a typical b_3 hysteresis loop measurements for TB1067 Tevatron dipole [5]. The decay and snapback are clearly visible at the upper and the lower part of the curve. They correspond to the field changes at the back- and injection porch, respectively (see Fig. 1). For the injection part we measured average amplitude of 1.45 units of sextupole decay at 30 min duration of the injection porch.

Moreover, for the Tevatron dipoles, we investigated the decay in the main field, B_1. An example of this measurement is shown in Fig. 3, top. The two solid lines represent the average value of B_1 at the beginning and the end of the injection porch. In this measurement, we observed 0.9 units of B_1 decay while the average for the set of dipoles was found to be 1.1 units. The bottom part of the figure shows the decay and snapback in the sextupole, decapole and tetradecapole.

A profile with a similar structure to one shown in Fig. 1 was executed during the production quality assurance measurements for the LHC IR quadrupoles (MQXB cold masses) [6]. The LHC profile is characterized with the absence of the back and front porches, lower ramp rate, and flattop over 12 kA, and duration of the injection porch of 15 min at 0.66 kA. A typical example of the decay and snapback in MQXB11 is shown in Fig. 4. The average decay amplitude for these quadrupoles was found to be on the order of 0.4 units.

Decay and Snapback in Nb_3Sn Magnets

As mentioned in the Introduction, Fermilab executed an intensive R&D program building magnet models using Nb_3Sn conductor. In the first phase of this program, six 1 m-long dipole models HFDA02-07 were produced and

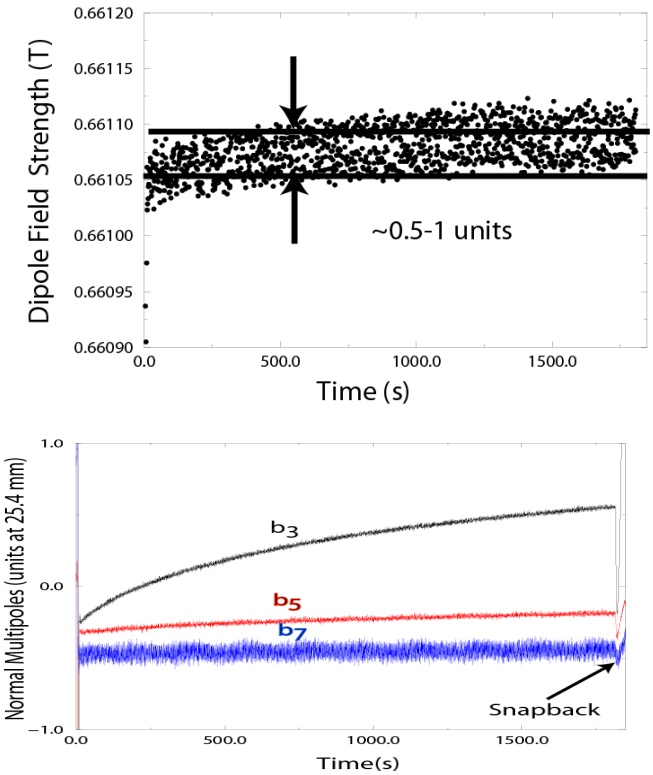

Figure 3: Top: typical decay in the main dipole field B_1, bottom: decay in the allowed multipoles b_3, b_5 and b_7 in the Tevatron dipoles after 30 min at injection.

tested. The strand for the first three models HFDA02-04 was made using the Modified Jelly Roll (MJR) process while the last three models HFDA05-07 were assembled using a cable produced with the Powder-in-Tube (PIT) process. Detail information about these dipoles, including the cable types, coil manufacturing and magnet production can be found in [11].

Figure 5 shows the sextupole field measurements at the injection porch during the accelerator profile. The measurements of the HFDA02-04 and HFDA06 models were performed with a tangential probe with a length of 250 mm, optimized for the length of the cable twist pitch. The probe dimension corresponded to ~2 cable twist pitches; in this way we performed an accurate integration over the spatially periodic field pattern due to the cable

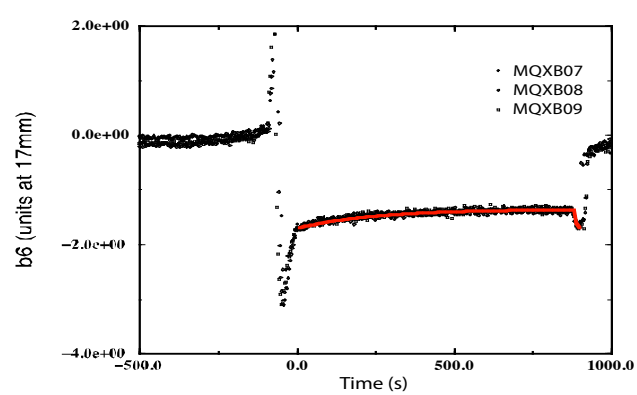

Figure 4: Decay and snapback in the dodecapole field component of the LHC IR quadrupoles.

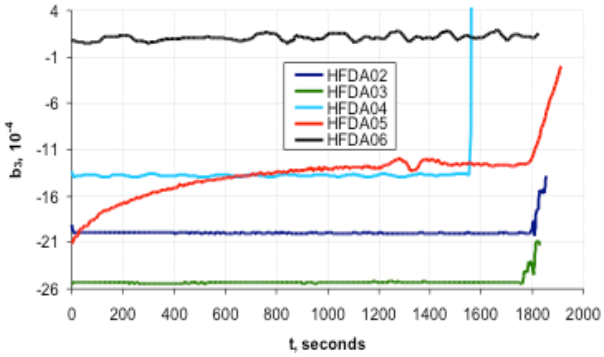

Figure 5: Dynamic effect measurements in the sextupole field component of Nb_3Sn VLHC dipole models.

twist pitch. Surprisingly, one can see that no decay and consequent snapback was observed in these magnets.

At the time of HFDA05 measurements, the 250 mm-long probe was unavailable. For this magnet, we used a 43 mm-long tangential-type probe that wasn't design to perform optimal integration over the cable twist pitch. As a result, a 7 units drift in b_3 was observed without any snapback and we assumed that it was due to a slow change of the longitudinal periodic sextupole field phase, but not a change in the field amplitude.

In the next phase of Nb_3Sn program, Fermilab as part of US-LARP collaboration was testing the technological model of a new generation large-aperture IR quadrupoles for LHC luminosity upgrade. This phase included tests of six 1 m-long TQC and TQS quadrupoles and two 3.7 m-long models from LQS series. The dynamic effect measurements in a subset of magnets are shown in Fig. 6 [8,9]. The result confirmed our expectation from the HFDA measurements: no decay and snapback was observed.

Nb_3Sn Result Interpretation

According to recent models, the dynamic effects observed in the NbTi magnets can be explained by current redistribution between the strands in the multi-stranded Rutherford cables from which the magnets are wound [10]. In this model, particular parts of the magnets, like the ends, are dominating sources of the current redistribution among the strands. This redistribution is affected by the splice to strand resistances and the complex net of interstrand contact resistances within the cable. It can occur relatively slowly with time constants of the order of hundred or thousands seconds. These current imbalances have also been called Boundary Induced Coupling Currents (BICC) and it is believed that they are dominantly responsible for the dynamic effects seen in magnets.

To understand the differences in the dynamic behavior of the NbTi and Nb_3Sn, one should look at the differences in the cable manufacturing and coil winding. For the Nb_3Sn magnets a common practice is to use a "Wind&React" method for the coils (the superconducting Nb_3Sn phase is formed after the coil winding during the high temperature heat treatment) due to the brittleness of the Nb3Sn strand after the reaction. Before the heat treatment the copper strand jackets are strongly compressed to each other. During the

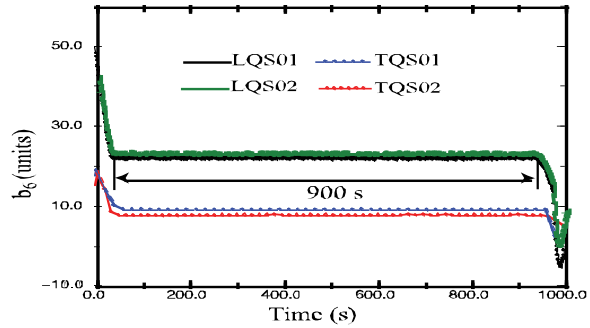

Figure 6: Dynamic effect measurements in the dodecapole field component of Nb_3Sn LARP quadrupole models.

long heat treat phase, a strong bond between them is created. This effect reduces BICC to the Inter-Strand Coupling Currents, (ISCC) which flow only in loops with a length equal to the cable twist pitch and have short time constant of 0.01-1.00 s. These short-time dynamic effects are practically undetectable to standard rotating coil measurement systems.

SUMMARY

A summary of the dynamic effects in the NbTi and Nb_3Sn magnets measured at Fermilab MTF is presented. Surprisingly, the common decay and snapback is not observed in the Nb_3Sn magnets. A plausible explanation for the difference is presented, associated with the differences in production and winding processes between the NbTi and Nb_3Sn coils.

REFERENCES

[1] D. A. Finley et al., "Time Dependent Chromaticity Changes in the Tevatron", in Proc. 1987 PAC., Washington, DC, 1987, pp. 151-153.

[2] M. Martens et al., "Studies of the Chromaticity, Tune, and Coupling Drift in the Tevatron", in Proc. 2005 PAC, pp. 725-727.

[3] N. J. Sammut et al.,"Mathematical formulation to predict the harmonics of the superconducting Large Hadron Collider magnets", Phys. Rev. ST Accel. Beams 12, 102401, Oct. 2009.

[4] "Design study for a staged Very Large hadron Collider", Fermilab-TM-2149, June 4, 2001.

[5] G.V. Velev et al., "Measurements of the Persistent Current Decay and Snapback Effect in Tevatron Dipole Magnets", IEEE Trans. on Appl. Supercond., v.17, June 2007, pp. 1105-1108.

[6] G.V. Velev et al., "Field Quality of the First LARP Nb_3Sn 3.7 m-Long Quadrupole Model of LQ Series", IEEE Trans. on Appl. Supercond., v.17, 2007, pp. 1109 - 1112.

[7] A. Zlobin, "Status of Nb_3Sn accelerator magnet R&D at Fermilab", arXiv:1108.1869v1.

[9] G.V. Velev et al., "Field Quality Measurements and Analysis of the LARP Technology Quadrupole Models", IEEE Trans. Appl. Supercond., vol. 18, 2008, pp. 184-187.

[9] G.V. Velev et al., "Field Quality Study of the LARP Nb_3Sn 3.7m-long Quadrupole Models of LQ series", IEEE Trans. Appl. Supercond., vol. 21, 2012.

[10] M. Haverkamp, "Decay and Snapback in Superconducting Accelerator Magnets", PhD Thesis, University of Twente, Netherlands, 2003.