SYNCHRONIZATION AND JITTER STUDIES OF A TITANIUM-SAPPHIRE LASER AT THE A0 PHOTOINJECTOR*

T. J. Maxwell[1,2], P. Piot[1,2], J. Ruan[2], M. J. Kucera[2]
[1] Department of Physics, Northern Illinois University, DeKalb, IL 60115, USA
[2] Fermi National Accelerator Laboratory, Batavia, IL 60510, USA

Abstract

A new titanium-sapphire laser has recently been installed at the A0 photoinjector for use in ongoing beam generation and ultra-fast beam diagnostics experiments. Where the system is used as the photoinjector drive laser, jitter and drift in the laser pulse time of arrival with respect to the low-level RF master oscillator and other beam components are known to degrade beam performance. These same fluctuations can also impact the temporal resolution of laser-based diagnostics. To resolve this, we present the results of some beam-based timing experiments as well as current progress on a synchronization feedback loop being adapted to the new laser system.

MOTIVATION

Among experiments currently under way at the A0 photoinjector (A0PI) are two involving ultra-fast laser applications. The first is ellipsoidal electron bunch generation by the space charge-driven expansion of a so-called "pancake distribution" in the RF gun [1]. To generate this distribution, a drive laser capable of producing UV pulses on the order of hundreds of femtoseconds is required.

The second of these experiments [2] involves ongoing work with single-shot electro-optic (EO) spectral encoding [3, 4], which requires the delivery of a well-synchronized broadband IR laser pulse for use as a probe.

In both of these cases the pulse generation and delivery must be temporally stable with respect to the 1.3 GHz low-level RF. For the former this is for synchronization with the gun phase. For the latter this is to ensure that the short (picoseconds to hundreds of femtoseconds) IR probe pulse consistently arrives at the EO diagnostics concurrently with the electron bunches being measured.

THE TITANIUM-SAPPHIRE LASER

The system is comprised of a Tsunami titanium-sapphire oscillator seeding a Spitfire Pro XP regenerative amplifier, both produced by Spectra Physics. The oscillator runs with an 81.25-MHz repetition rate producing 10 nJ, 100 fs FWHM pulses at 800 nm. A pellicle beam splitter is used to pick off 75% of the seed beam to be used as the EO probe beam with the remaining 25% used as the seed for the regenerative amplifier.

*Work supported by the Fermi Research Alliance, LLC under U.S. Dept. of Energy Contract No. DE-AC02-07CH11359, and Northern Illinois Univ. under US Dept. of Defense DURIP program Contract N00014-08-1-1064.

The regenerative, chirped pulse amplifier has been modified to allow for pulse shaping using a DAZZLER longitudinal acousto-optic modulator by FASTLITE (to optimize pulse duration). The seed is first strongly chirped by a grating stretcher then passes through the pulse shaper before amplification and recompression. Amplification is driven by a Spectra Physics 30 W Empower Q-switched pump laser. This produces 100 fs pulses with 3-mJ pulse energy at a 1-kHz repetition rate.

These are then converted to the UV in a two-stage frequency tripler using β-barium borate crystals to produce up to 300-μJ pulses at 266 nm with an estimated pulse length of < 400 fs (further optimization pending).

The UV pulse train and oscillator probe are finally transported from the laser lab to the accelerator tunnel by a vacuum-enclosed, 50-foot optical transport system consisting of several mirrors, AR coated for 266 nm and 800 nm, and an uncoated imaging lens.

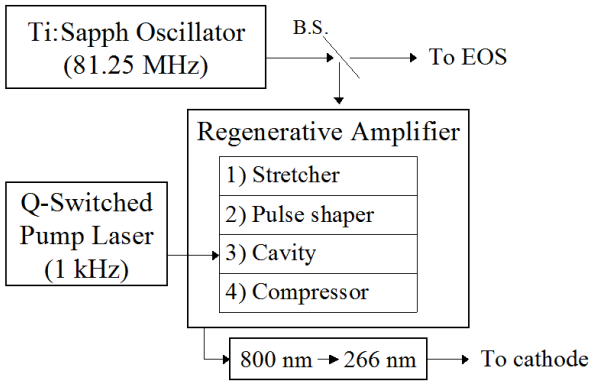

Figure 1: Schematic optical layout with Ti:sapph running as both photoinjector drive laser and EOS probe laser.

LASER-TO-ACCELERATOR SYNCHRONIZATION

Locking the new seed laser to the A0 photoinjector 1.3-GHz master oscillator is somewhat straightforward. The 16th harmonic of the A0 master oscillator is provided to the Tsunami's phase lock loop electronics (Model 3930) to keep output in phase with the master oscillator.

Tsunami phase stability is specified to better than 500 fs RMS jitter. To verify this, a 20-GHz photodiode and 1.3-GHz cavity filter were used. The fast signal was measured with an Agilent E5052B signal source analyzer yielding an RMS jitter of 300 fs. This is in good

agreement with spec and in good comparison with < 200 fs RMS jitter measured for the master oscillator directly.

To drive photoemission at the cathode while the RF gun is loaded, a 1-kHz trigger is needed for the Ti:sapph system in sync with the 1-Hz repetition rate of the photoinjector. Poor triggering can impact the performance of the Empower pump laser as well as the loading of the DAZZLER pulse shaper, leading to unstable amplifier output.

The 1 Hz trigger event used at A0PI for instrumentation and RF loading is derived from a 9-MHz signal counted down from the 1.3-GHz master oscillator. From this 9 MHz, a 10-Hz event is selected to be in phase with the building's 60-Hz AC to optimize high-power pulse generation for the klystron. Finally, the 1 Hz is selected from the 10-Hz event.

The phase locking of the slow trigger to the 60-Hz AC drives millisecond-scale instability in the frequency of the 1-Hz signal. Over several hours the period is found to vary by as much as ±2.5 ms. For the 10-Hz trigger, 30 µs RMS jitter and ±120 µs are observed. These variations being significant compared to a 1 ms period, solutions as simple as using a burst signal generator to build the laser's 1-kHz signal failed.

A summary schematic of the current clock solution is shown in Fig. 2. A Xilinx field programmable gate array (FPGA) was used to synthesize the 1-kHz signal by combining the 10-Hz trigger with the 9-MHz sub-master.

The variable delay 1-kHz signal is then sent to the amplifier's time delay generator (TDG). This generates a number of delayed 1-kHz triggers, synchronized back to the Tsunami's 81.25-MHz output, needed to time the amplifier's pump laser, Pockels cells, and pulse shaper.

Using the second UV pulse in the 1-kHz train (1 ms after 1-Hz event), the UV intensity is found to be stable with 3% RMS fluctuation under ideal conditions.

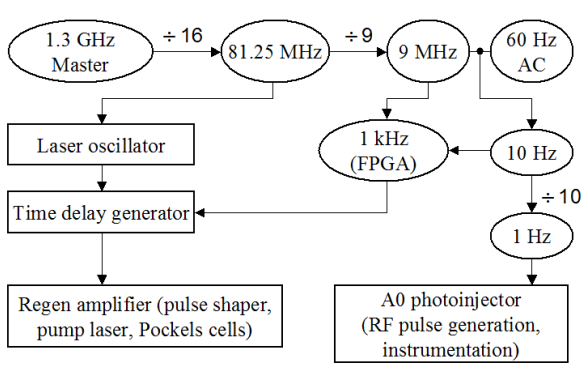

Figure 2: Timing schematic for Ti:sapph system at A0PI.

Under the worst conditions, notably when the period of the 10-Hz trigger drifts to values of 99.6 µs or less, the laser output becomes unstable. Monitoring either the shot-to-shot timing or intensity of the pulses, these points are easily detected so spurious data points can be discarded.

Errors in the DAZZLER pulse shaper's timing are suspected to be the cause of these lost pulses. At present the failure rate over several hours is 20% with improvements planned to reduce this to 1% or better.

RF GUN LAUNCH PHASE STABILITY

Two techniques were used to verify the stability of the UV pulse time of arrival at the cathode. First is imaging the reflection of the UV pulse from the vacuum window to a streak camera, also located in the accelerator tunnel and phase locked to the 81.25-MHz sub-master. Shot-to-shot, a Gaussian fit is performed to the time projection of the image to yield the mean arrival time of the pulse.

The second measure relies on the phase sensitivity of charge emitted from the RF gun. A gun phase scan is performed recording the bunch charge for several shots at each phase (Fig. 3). The phase is then set to the center of the rising edge of the scan. In this region, phase fluctuations between the laser and gun RF produce a change in the bunch charge that can be mapped back to phase using the recorded scan.

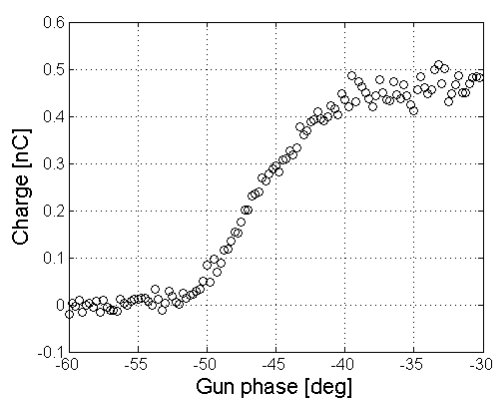

Figure 3: RF gun phase scan. In this example, setting gun phase for –46.5º produces a correlation between launch phase and charge emitted from gun over a limited range.

While both methods are sensitive to the laser's time of arrival, the streak camera is also sensitive to any fluctuations in its internal phase lock loop (locked to A0 81.25-MHz sub-master) and the charge technique to changes in the gun phase and amplitude. Further, while the streak camera resolution is ~320 fs in its finest sweep mode, noise in the current transformer signal used to measure the bunch charge effectively drive the resolution of the gun approach to 1 ps RMS.

We refer to temporal jitter and temporal drift distinctly as the data tends to show high frequency shot noise moving about a slowly varying mean value. Specifically, the jitter component is taken as the RMS arrival time over ~10 shots (seconds) while the drift is taken as the 10-shot moving average. Fig. 4 shows data taken by streak camera. Gaps in the data are associated with the poor triggering mentioned previously.

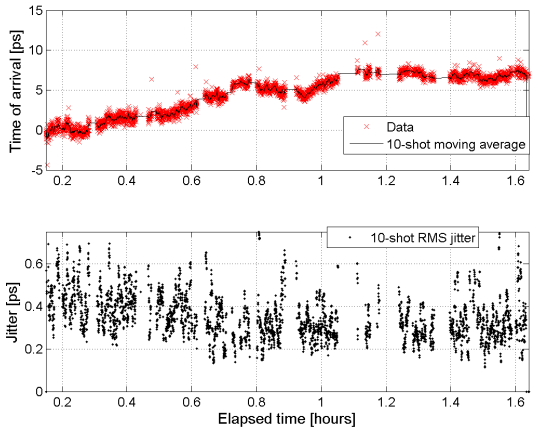

Figure 4: Streak camera data with 10-shot moving average (top) and 10-shot moving RMS (bottom). Typical 350 fs RMS jitter observed with a 5 ps/hour drift.

Streak camera data typically shows 350 fs RMS jitter, but the mean arrival time drifts several ps per hour. Charge data taken simultaneously with this is similar, but jitter is 1.1 ps, dominated by the instrument error. The data is still used to check for correlations in the drift. Fig. 5 shows a scatter plot of the 10-shot moving averages determined by the two methods for the same set.

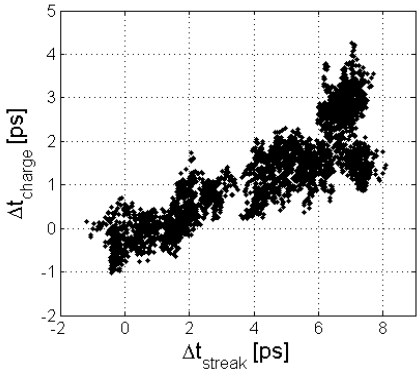

Figure 5: Scatter plot of drifts (moving averages) recorded for the two different techniques. Slope of fit through these points is 1 ps / 2.7 ps (Δt_{charge} / Δt_{streak}).

From Fig. 5, there appears to be correlation between the data sets suggesting the laser arrival time is indeed drifting. Such changes have previously been observed in studies of the existing drive laser and are attributed to thermal expansion and pointing error in the 50' transport line from laser room to the accelerator tunnel. The slope of fit through the above scatter plot gives 2.7 ps of streak camera drift per 1 ps of charge technique drift and not 1:1 agreement as we might expect.

Optical path length changes still partly explain the changes, however, as the UV pulse also travels an additional 35' from the RF gun to the streak camera, compounding any thermal effects for data taken by streak camera. Further, we have seen that with more strictly controlled environmental conditions the drift can be reduced to a less than 1 ps peak-to-peak oscillation.

Shot-to-shot jitter is typically < 400 fs RMS as taken by streak camera, a level the charge method cannot resolve. As a second check, the accelerator was run with normal operating parameters using the 9-cell accelerating cavity to introduce a time-energy correlation. Observation of the energy downstream at the dipole spectrometer also gave less than 400 fs RMS shot-to-shot jitter, again approaching the resolution of the measurement.

SUMMARY AND IMPROVEMENTS

The ultra-short UV output of the Ti:sapph system as drive laser is steadily improving. Shot-to-shot noise appears to be suppressed to levels that would be difficult to improve given the 300 fs RMS jitter intrinsic in the new seed laser. To correct for the estimated 2- to 5-ps/h drift due to the transport line, work on a phase feedback loop is underway. With the 81.25-MHz seed laser now using the same optical path to the cave, a 1.3 GHz phase detector and feedback loop recently developed internally for use with the existing laser can also be used to correct the time of arrival of the Ti:sapph system.

For EO sampling, additional work is still required to synchronize the IR seed laser output to the arrival time of bunches at the chosen diagnostic cross. First, an additional and independent fine phase control of the probe pulse spanning 12 ns is needed. Additionally, though the scheme described here will keep Ti:sapph pulses in the cave in phase with the local RF, this may not guarantee syncing with *e*-bunches as momentum compaction can cause timing fluctuations to propagate differently through accelerating structures [5]. However, a similar feedback scheme was sufficient for other EO experiments [6].

Still, means of phase locking the probe pulse to the beam are being investigated. Coarse timing can be measured by imaging optical transition radiation and laser spot on a fast photodiode [6]. For fine timing, analysis of the EO diagnostic signal centroid with feedback is suggested [7]. When complete, stable operation of the newly installed Ti:sapph system as both photoinjector drive laser and EO sampling probe simultaneously are expected.

REFERENCES

[1] O. J. Luiten, *et al.*, Phys. Rev. Lett. **93**, 094802 (2004).

[2] T. J. Maxwell and P. Piot, PAC'11, Vancouver, June 2009, TH6REP010, p. 3968 (2009).

[3] F. G. Sun, Z. Jiang, and X.-C. Zhang, Appl. Phys. Lett. **73**, 2233 (1998).

[4] J. van Tilborg, *et al.*, Opt. Lett. **33**, 1186-1188 (2008)

[5] P. Piot, *et al.*, Phys. Rev. ST Accel. Beams **9**, 053501 (2006).

[6] A. Azima, Ph.D. Thesis, University of Hamburg (2009).

[7] C. M. Scoby, *et al.*, Phys. Rev. ST Accel. Beams **13**, 022801 (2010).